2

Standard Primitives

Learning Objectives

After completing this chapter, you will be able to:

- *Understand viewport navigation controls*
- *Understand selection techniques*
- *Understand Scene Explorer/Layer Explorer*
- *Create standard primitives*
- *Render a still image*
- *Change the background color of a scene*



INTRODUCTION

In this chapter, you will learn to create the default 3D objects called standard primitives. These geometric primitives are parametric objects. Also, you will learn about the viewport navigation controls and selection techniques.

VIEWPORT NAVIGATION CONTROLS

The tools at the lower right corner of the Autodesk 3ds Max screen are known as viewport navigation controls. These tools are used to control the display and navigation of the viewport.

To adjust the view of an object in a viewport, you need to be familiar with the tools in the viewport navigation controls area. Note that some of the tools mentioned below are available in a flyout which will be displayed when you click on the arrow on the lower right corner of the tool icon. These tools are discussed next.



The **Zoom** tool is used to increase or decrease the magnification in the active viewport. You can zoom in by pressing the left mouse button and dragging the cursor up. Similarly, you can zoom out by pressing the left mouse button and then dragging the cursor down.



The **Zoom All** tool is the same as the **Zoom** tool with the only difference that this tool zooms the display in all four viewports simultaneously.



The **Zoom Extents** tool is used to view all objects in the active viewport.



The **Zoom Extents Selected** tool is used to view all selected objects in the active viewport.



The **Zoom Extents All** tool is the same as the **Zoom Extents** tool with the only difference that this tool is used to view all objects in all viewports.



The **Zoom Extents All Selected** tool is the same as the **Zoom Extents Selected** tool with the only difference that this tool is used to view all selected objects in all viewports.



The **Zoom Region** tool is used to define the area to be magnified and viewed in the current viewport. The area to be magnified is specified by a rectangle created by dragging the cursor. The **Zoom Region** tool is not available in the Camera viewport.



The **Field-of-View** tool is available only in the Perspective and Camera viewports. It is used to change the field of view of the scene in these viewports. More the field of view of a camera, more will be the visibility of the scene, and vice-versa.



The **Pan View** tool is used to pan the scene in the viewport. This tool enables you to display the contents of the viewport that are outside the display area without changing

Evaluation Copy. Do not reproduce. For information visit www.cadcim.com

the magnification of the current viewport.



The **2D Pan Zoom Mode** tool is available in Perspective and Camera viewports only. On invoking this tool you can pan and zoom the scene outside the rendering frame. In other words, the position of the camera does not change when you pan or zoom in the scene. If the **2D Pan Zoom Mode** tool is chosen, an additional viewport label appears on the right of the other viewport labels.



The **Walk Through** tool is available in Perspective and Camera viewports only. It allows you to navigate through these viewports by pressing a set of shortcut keys. On invoking this tool, the cursor changes into a circle with a dot at its center. Press the arrow keys to navigate through the viewport. On pressing the arrow keys, the cursor shows a directional arrow indicating the navigation direction.



The **Orbit** tool is used to rotate the viewport around its view center. This enables you to see three-dimensional (3D) view of the objects in the Perspective viewport. You can also rotate the Top, Front, and Left viewports. But in such cases, the respective viewport becomes the Orthographic viewport.



The **Orbit Selected** tool is the same as the **Orbit** tool with the only difference that it is used to rotate the viewport around the center of the current selection.



The **Orbit SubObject** tool is the same as the **Orbit** tool with the only difference that it is used to rotate the viewport around the center of the current sub-object selection.



The **Maximize Viewport Toggle** tool is used to maximize the active viewport so that you can view only the active viewport instead of all the four viewports.



The **Dolly Camera** tool is available in Camera viewport only. It is used to move the camera toward and away from the target. If the camera passes through the target, the camera flips 180 degrees and moves away from its target.



The **Dolly Target** tool is only available if viewport's camera is a target camera. This tool is used to move the target of the camera towards and away from it. If the target passes through the camera to the other side, the camera view will be reversed. Otherwise, there will be no visual change in the camera viewport.



The **Dolly Camera + Target** tool is only available if viewport's camera is the target camera. This tool is used to move both the camera and its target.



The **Roll Camera** tool is available in Camera viewport only. It rotates the target camera about its line of sight, and rotates a free camera about its local Z axis.

SELECTION TECHNIQUES

Evaluation Copy. Do not reproduce. For information visit www.cadcim.com

In 3ds Max, you can select objects using various tools such as **Select Object**, **Select by Name**, **Select and Move**, and so on. These tools are discussed next.

Select Object Tool

Quad Menu: Select
Main Toolbar: Select Object
Keyboard: Q



The **Select Object** tool is used to select one or more objects in the viewport. To select an object, choose this tool and move the cursor over the object; the cursor will convert into a selection cursor. Next, press the left mouse button; the object will be selected. To select more than one object at a time, hold the CTRL key and select the objects that you want to add to the selection. To remove an object from the selection, press and hold the ALT key and then click on the object that you want to remove from the selection.

Select by Name Tool

Menu bar: Edit > Select By > Name
Main Toolbar: Select by Name
Keyboard: H



The **Select by Name** tool is used to select an object from the list of objects in the scene. When you choose the **Select by Name** tool from the **Main Toolbar**, the **Select From Scene** dialog box will be displayed. If there are some components in the scene, then those components will be displayed in this dialog box, as shown in Figure 2-1. Now, select an object in the list and choose the **OK** button. Alternatively, you can double-click on the object name in the list to select it. You can also select more than one object by holding the SHIFT or CTRL key. The buttons at the top of the dialog box are used to filter the objects in the list.

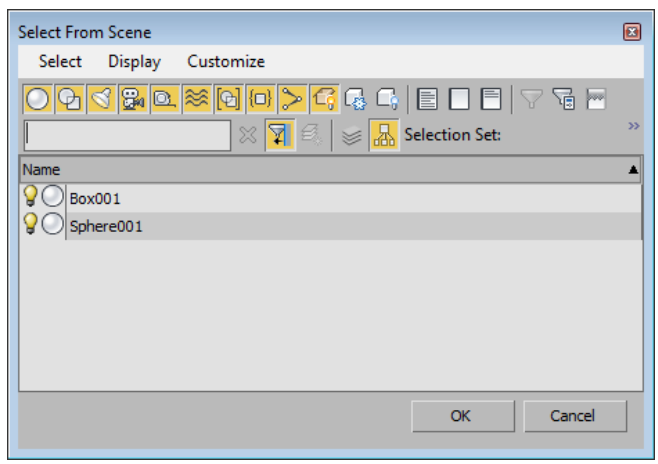

Figure 2-1 *The* ***Select From Scene*** *dialog box*

Evaluation Copy. Do not reproduce. For information visit www.cadcim.com

Select and Move Tool

Quad Menu: Move
Main Toolbar: Select and Move
Keyboard: W



The **Select and Move** tool is used to select and move the objects in the viewports. You can move an object by selecting it and then dragging the mouse along the X, Y, or Z axis. You can also move the selected object in the XY, YZ, or ZX plane. To move the selected object along one of the axes, choose this tool and then select the object; the move gizmo will be displayed. Move the cursor over the axis along which you want to move the object, press the left mouse button, and then drag the cursor. Similarly, to move the object in one of the planes, move the cursor over the plane displayed between the two axes; the plane will be highlighted in yellow. Next, press the left mouse button and drag the cursor.

Select and Rotate Tool

Quad Menu: Rotate
Main Toolbar: Select and Rotate
Keyboard: E



The **Select and Rotate** tool is used to rotate the objects in the viewport along the X, Y, or Z axis. To rotate the object along one of the axes, choose the **Select and Rotate** tool, and then select the object; a rotate gizmo will be displayed along with the X, Y, and Z axes. Next, move the cursor over the axes along which you want to rotate the object, press the left mouse button, and then drag the cursor. When you rotate the object, a transparent slice will be displayed which will provide a visual representation of the direction and the degree of rotation, refer to Figure 2-2. Also, you can view the degree of rotation in the X, Y, and Z axes in the coordinates displayed in the Coordinate display area at the bottom of the screen.

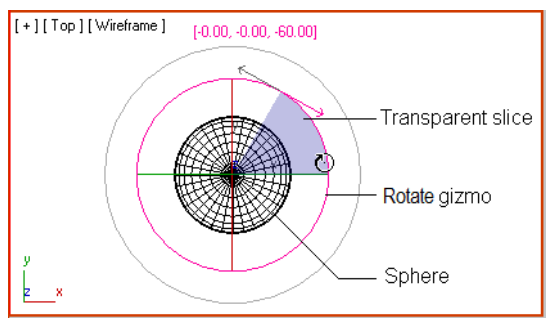

Figure 2-2 *The circular gizmo in the Top viewport displayed while rotating the object*

Select and Scale Tools

Quad Menu: Scale
Main Toolbar: Select and Scale
Keyboard: R

There are three types of tools that are used to scale an object. These tools are available in the Select and Scale flyout and are discussed next.

Evaluation Copy. Do not reproduce. For information visit www.cadcim.com

Select and Uniform Scale



The **Select and Uniform Scale** tool is used to scale the objects proportionally along the three axes. To scale an object uniformly along all the three axes, choose the **Select and Uniform Scale** tool from the **Main Toolbar** and select the object; the scale gizmo will be displayed, as shown in Figure 2-3. Move the cursor to the center of the gizmo and make sure its central portion is highlighted, refer to Figure 2-3. Next, drag the cursor up or down to scale the selected object. You can also perform non-uniform scaling using this tool. To do so, move the cursor over the axis along which you want to scale the object, refer to Figure 2-4, and then drag the cursor. Similarly, you can perform non-uniform scaling along the XY, YZ, or ZX plane by selecting the required plane and then dragging that plane, refer to Figure 2-5.

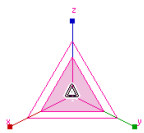

Figure 2-3 *The scale gizmo for uniform scaling*

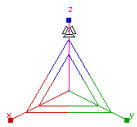

Figure 2-4 *Selecting the Z-axis for non-uniform scaling*

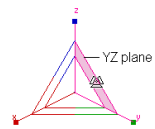

Figure 2-5 *Selecting the YZ plane for non-uniform scaling*

Select and Non-uniform Scale Tool



The **Select and Non-uniform Scale** tool is used to scale an object along a particular axis or plane non-uniformly. To scale the object, choose the **Select and Non-uniform Scale** tool from the Select and Scale flyout, and then select the object. Move the cursor over the X, Y, or Z axis along which you want to scale the object and drag the cursor to modify the shape of the object. Similarly, you can perform the non-uniform scaling along the XY, YZ, or ZX plane. You can also perform uniform scaling in the same manner, as described in the **Select and Uniform Scale** tool.

Select and Squash Tool



The **Select and Squash** tool is used to stretch and squash the object along the selected axis. To squash the object along one of the axes, choose the **Select and Squash** tool and select the object. Move the cursor over the axis along which you want to squash it. Next, drag the cursor. Similarly, you can squash the selected object along the XY, YZ, or ZX plane. To do so, move the cursor over the plane displayed between the two axes and drag the cursor to squash the object along that plane.



Note

By default, the color of the X-axis, the Y-axis, and the Z-axis of the transform gizmos is red, green, and blue, respectively. When you move the cursor over any one of these axes, it gets activated and turns yellow. You can see the colors of these axes displayed at the bottom left corner of each viewport. Also, the colored axes are displayed while selecting an object using the ***Select and Move****,* ***Select and Rotate****, or* ***Select and Scale*** *tool. Figures 2-6, 2-7, and 2-8 show the move gizmo, rotate gizmo, and scale gizmo, respectively.*

Evaluation Copy. Do not reproduce. For information visit www.cadcim.com

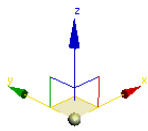

Figure 2-6 The move gizmo

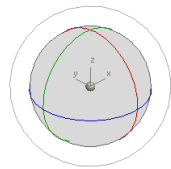

Figure 2-7 The rotate gizmo

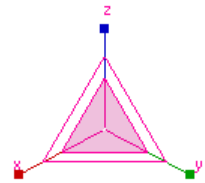

Figure 2-8 The scale gizmo

Select and Place Tool



In 3ds Max 2015, the **Select and Place** tool is introduced. This tool is used to position and orient an object with respect to another object. Using this tool, you can move an object along the surface of the another object as if it is attracted towards it. Also, the placed object changes its orientation according to the shape of the object on which it is placed. To place an object on another object, choose the **Select and Place** tool from the **Main Toolbar** and then click and drag the object to the other object. You will notice that the shape of the cursor has changed, refer to Figure 2-9. When you are satisfied with the orientation of the object, release the left mouse button; the selected object will be aligned with the other object, as shown in Figure 2-10.

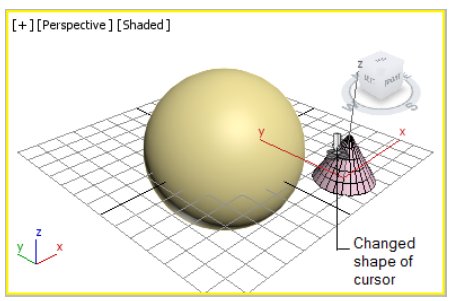

Figure 2-9 The changed shape of cursor

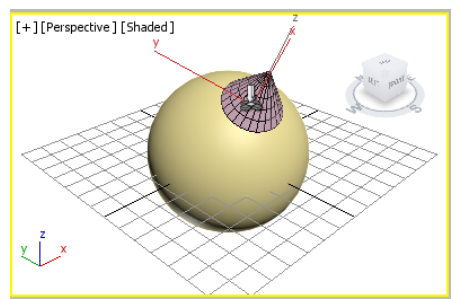

Figure 2-10 The selected object aligned with other object

SCENE MANAGEMENT

In 3ds Max 2015, the Scene Explorer and Layer Explorer are added which are used to manage complex scenes in efficient manner. For managing scenes in better way, you can also create and manage more than one Scene Explorers in a scene. The Scene Explorer can be switched to Layer Explorer. The Scene Explorer, Layer Explorer, and the procedure of creating and managing more than one Scene Explorer are discussed next.

Scene Explorer

The Scene Explorer is used to view, select, filter, and sort objects. It is also used to rename, delete, group, freeze, and hide objects. By default, the Scene Explorer is docked on the left in the default workspace, refer to Figure 2-11.

Evaluation Copy. Do not reproduce. For information visit www.cadcim.com

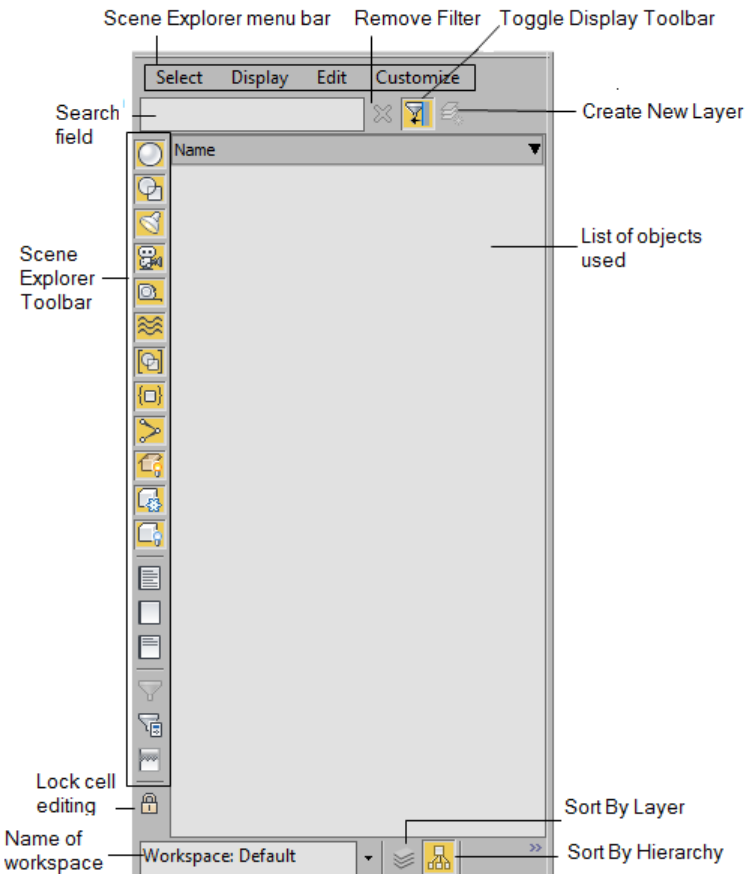

Figure 2-11 *The* ***Scene Explorer***

The options in the Scene Explorer menu bar are used to select objects, customize the Scene Explorer Toolbar, change the display to specific type of objects in its list, and so on. The **Toggle Display Toolbar** button is used to toggle the visibility of the Scene Explorer Toolbar. The Search field is used to search an object from the list of objects and thereby adding a filter to the list of objects. The **Remove Filter** button is used to remove the applied filter. When you right-click in the area where the list of objects is displayed, a quad menu will be displayed. The options in this quad menu are used to rename the object, freeze the object, and so on. The name of the workspace used in the scene is displayed in the field located at the bottom of the Scene Explorer. The arrow at the left of this field is used to save the active Scene Explorer as the default Scene Explorer, default mass explorer, and so on. The **Sort By Layer** button is used to switch the Scene Explorer to Layer Explorer. The Layer Explorer is discussed next.

Layer Explorer

The Layer Explorer will be displayed in the interface on choosing the **Sort By Layer** button in the Scene Explorer, refer to Figure 2-11. By default, the Layer Explorer is displayed with

Evaluation Copy. Do not reproduce. For information visit www.cadcim.com

a **0 (default)** layer, as shown in Figure 2-12. You can create any number of layers in the Layer Explorer by using the **Create New Layer** button. To add an object to the newly created or existing layer, expand the **0 (default)** layer and then select the object from the list of objects in the Layer Explorer and right-click on it; a quad menu will be displayed, refer to Figure 2-13. Choose **Add Selection To > New Parent (pick)** from the quad menu and select the desired layer from the list of layers displayed; the selected object is transferred to the selected layer. You can also create new layer and add the selected object to it by using the quad menu. To do so, select the object from the list of objects displayed. Next, right-click on it and then choose **Add Selected To > Create Layer** from the quad menu displayed; a new layer will be created and the selected object will be added to it. To rename a layer, right-click on it and choose **Rename** from the quad menu displayed.

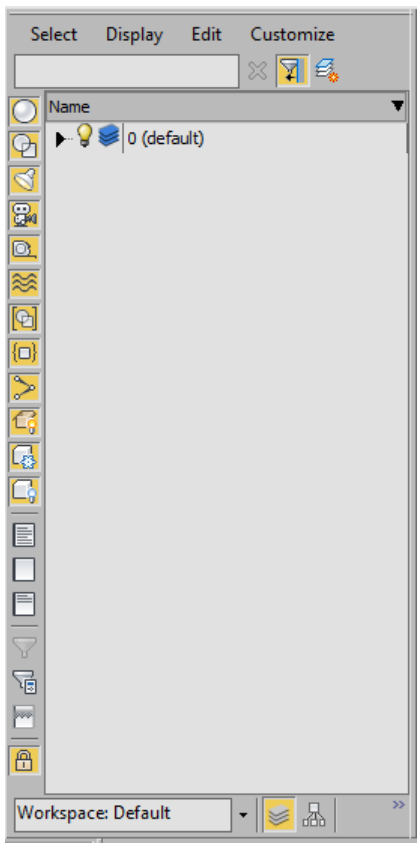

Figure 2-12 *The* ***Layer Explorer***

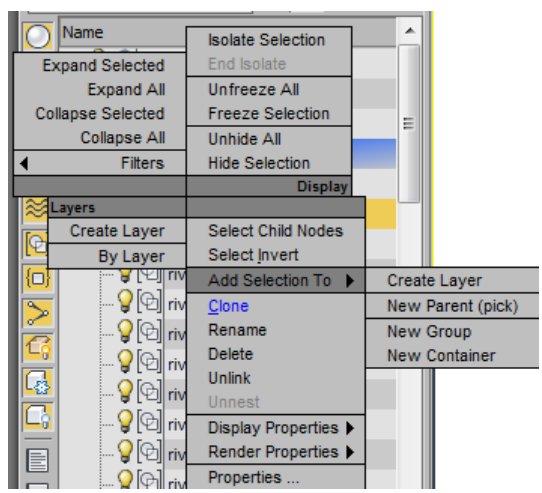

Figure 2-13 *The quad menu*

Creating and Managing the Scene Explorer

In 3ds Max 2015, you can create new Scene Explorer(s) to manage complex scenes. You can open number of Scene Explorers simultaneously in a scene.

Evaluation Copy. Do not reproduce. For information visit www.cadcim.com

To create a new Scene Explorer, choose **Tools > New Scene Explorer** from the menu bar; the **Scene Explorer - Scene Explorer #** window will be opened, refer to Figure 2-14. You can close and reopen the Scene Explorer(s). To reopen the recently closed Scene Explorer, choose **Tools > Open Explorer: Scene Explorer #** from the menu bar. Alternatively, you can press ALT+CTRL+O to reopen it.

To manage various Scene Explorers, choose **Tools > Manage Scene Explorer** from the menu bar; the **Manage Scene Explorer** dialog box will be displayed, refer to Figure 2-15. Using this dialog box, you can select a Scene Explorer and set it as a default Scene Explorer. You can also rename or delete Scene Explorer(s) using this dialog box. You can save a Scene Explorer for later use in other scenes. To do so, choose the **Save** button; the **Save Scene Explorer** dialog box will be displayed. Next, enter the desired name in the **File name** text box and choose **Save**; the Scene Explorer is saved with the desired name. To use a saved Scene Explorer in other scenes, choose the **Load** button; the **Load Scene Explorer** dialog box will be displayed. Select the desired Scene Explorer from this dialog box and choose **Open**; the desired Scene Explorer will be opened in the current scene.

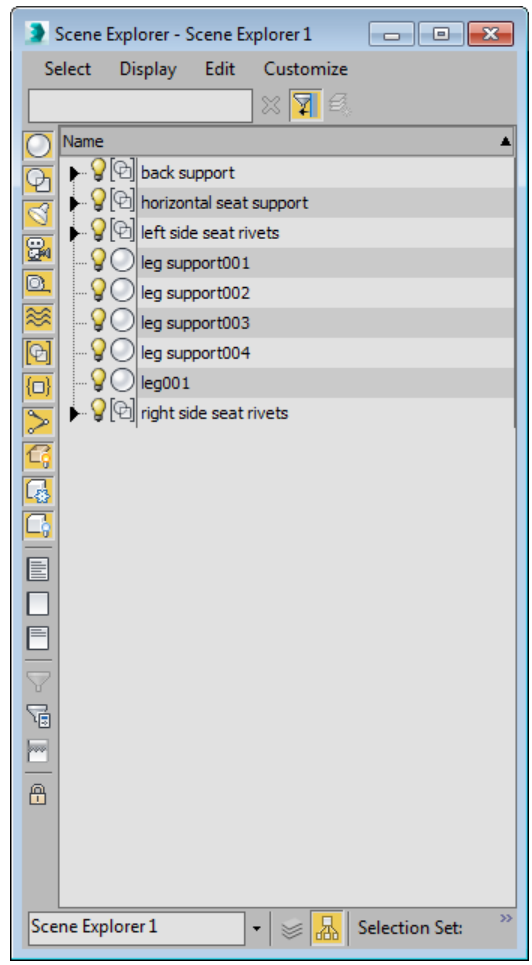

Figure 2-14 *The* ***Scene Explorer - Scene Explorer1*** *window*

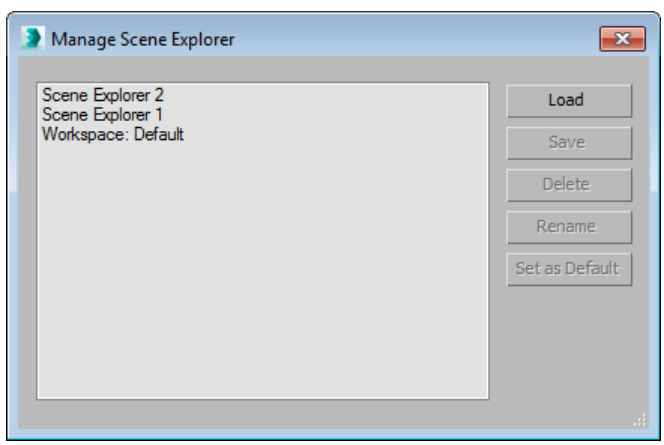

Figure 2-15 *The* ***Manage Scene Explorer*** *dialog box*

Evaluation Copy. Do not reproduce. For information visit www.cadcim.com

AXIS CONSTRAINTS TOOLBAR

The buttons in the **Axis Constraints** toolbar are used to specify the axis or plane along which the transformation would be restricted. The transformation includes movement, rotation, and scaling of an object. The **Axis Constraints** toolbar is not displayed by default on the interface.

To display it, right-click in the blank area on the **Main Toolbar**; a shortcut menu will be displayed. Choose **Axis Constraints** from the shortcut menu; the toolbar will be displayed on the screen, as shown in Figure 2-16. Now, choose one of the buttons available in the **Axis Constraints** toolbar to perform the transformation along the selected axis. You can use the F5, F6, and F7 function keys to invoke the **X**, **Y**, and **Z** constraints, respectively. To toggle between the **XY**, **YZ**, and **XZ** axes, you can use the F8 function key.

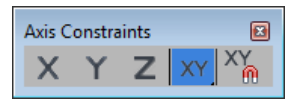

Figure 2-16 *The* ***Axis Constraints*** *toolbar*

STANDARD PRIMITIVES

Autodesk 3ds Max has several basic three-dimensional geometric shapes which are known as standard primitives such as box, cone, sphere, cylinder, torus, tube, and so on. You can use these primitives to create simple 3D models such as a table, box, chair, and so on. All the standard primitives can be created dynamically using the mouse or by specifying the parameters in the **Keyboard Entry** rollout of the **Command Panel**.



To create the standard primitives, choose **Create > Geometry** in the **Command Panel**. By default, the **Standard Primitives** option is selected in the drop-down list below the **Geometry** button. Now, activate the viewport in which you want to create the primitives.



Next, choose the corresponding tool from the **Object Type** rollout. In the following section, you will learn to create and modify the standard primitives using various tools available in the **Object Type** rollout.

Creating a Box

Menu bar:	Create > Standard Primitives > Box
Command Panel:	Create > Geometry > Standard Primitives > Object Type rollout > Box

To create a box, activate the viewport by clicking in it. Next, choose the **Box** tool from the **Object Type** rollout; the **Name and Color**, **Creation Method**, **Keyboard Entry**, and **Parameters** rollouts will be displayed, as shown in Figure 2-17. Press and hold the left mouse button in the viewport to specify the first corner of the box and then drag the cursor to define the length and width of the box. Release the left mouse button to get the desired length and width. Now, move the cursor up or down to define the height of the box. Click after you get the desired height; the box will be created, as shown in Figure 2-18.

Evaluation Copy. Do not reproduce. For information visit www.cadcim.com

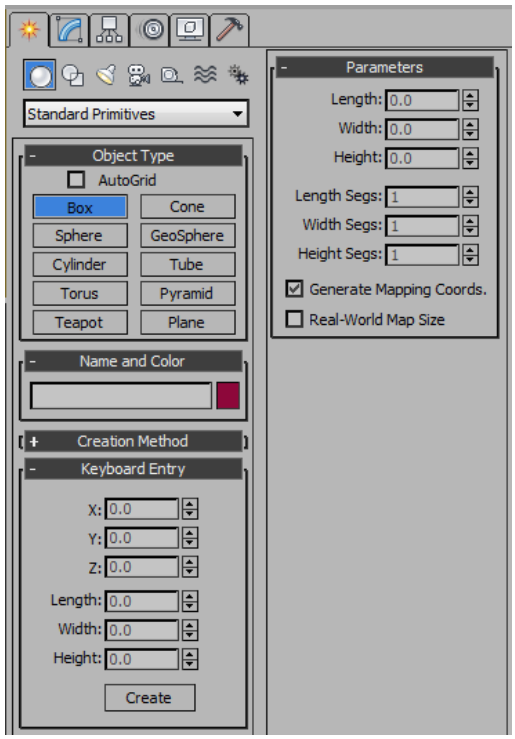

Figure 2-17 *Various rollouts to create a box*

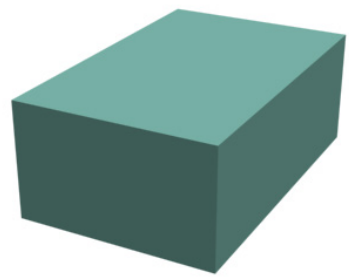

Figure 2-18 *A box displayed in the viewport*

Note

1. To view all the rollouts, position the cursor over any rollout until you see the pan icon (hand). Next, press and hold the left mouse button and drag the cursor in the rollout.

2. The plus sign (+) on the left side of the rollout head indicates that the rollout is collapsed and the minus sign (-) indicates that the rollout is expanded.

Tip: *If you are creating a standard primitive that requires multiple steps, you can pan or orbit the viewport between the steps. To pan the viewport, drag the cursor with the middle-mouse button or mouse wheel held down. To rotate the viewport, press and hold the ALT key and then drag the cursor with middle-mouse button or mouse wheel held down.*

Various rollouts used to create and modify the box are discussed next.

Name and Color Rollout

In Autodesk 3ds Max, a specific name and color is automatically assigned to the newly created box. To modify this name, expand the **Name and Color** rollout. Enter a new name in the text box available in this area and then press ENTER. To change the color of the box, choose the color swatch on the right side of the edit box; the **Object Color** dialog box will be displayed, as shown in Figure 2-19. Choose a new color from this dialog box; the selected color will be displayed in the **Current Color** color swatch. Now, choose the **OK** button; the new color will be assigned to the box.

Evaluation Copy. Do not reproduce. For information visit www.cadcim.com

To customize a color, choose the **Add Custom Colors** button in the **Object Color** dialog box; the **Color Selector: Add Color** dialog box will be displayed, as shown in Figure 2-20. Now, customize a new color in this dialog box and choose the **Add Color** button; the new color will be displayed in one of the color swatches in the **Custom Colors** area of the **Object Color** dialog box. Next, choose the **OK** button; the new color will be assigned to the box.

Note

*The options in the **Name and Color** rollout are same for all the standard primitives.*

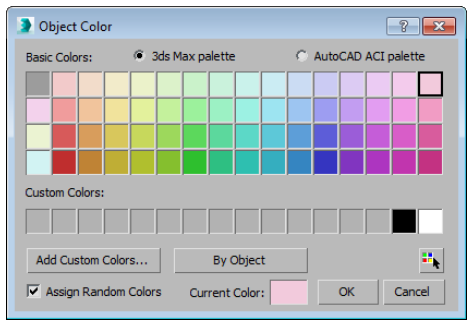

***Figure 2-19** The **Object Color** dialog box*

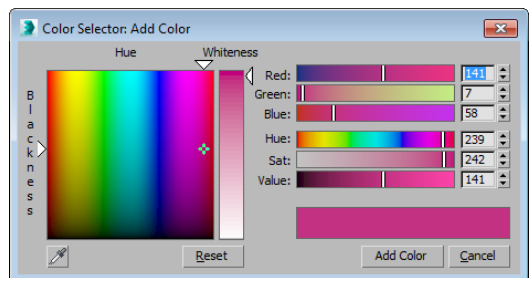

***Figure 2-20 The Color Selector: Add Color** dialog box*

Creation Method Rollout

The options in this rollout are used for creating the box dynamically using the mouse. By default, the **Box** radio button is selected. As a result, you can create a box having different length, width, and height. Select the **Cube** radio button to create a box of equal length, width, and height.

Keyboard Entry Rollout

This rollout is used to create a box by entering the parameters in the **Keyboard Entry** rollout using the keyboard. The **Length, Width,** and **Height** spinners are used to specify the length, width, and height of the box, respectively. The **X**, **Y**, and **Z** spinners to specify the position of the box in the viewport along the axes of the home grid or of a grid object. By default, the value in these spinners is 0, therefore, the object will be created at the center of the home grid or of a grid object in the viewport. The **Create** button in the **Keyboard Entry** rollout is used to create a box in the viewport of specified dimensions.

Note

1. The grid object is a type of helper object. It is a local grid other than the home grid that you can create yourself as required

*2. The **Keyboard Entry** rollout in all the standard primitives is used to create the corresponding primitive by entering the parameters in this rollout. The method of creating all primitives is the same as discussed. The only difference is in the type and number of parameters of various standard primitives.*

Evaluation Copy. Do not reproduce. For information visit www.cadcim.com

Parameters Rollout

After creating the box, you can modify its dimensions using the **Parameters** rollout. The **Length, Width**, and **Height** spinners are used to specify the length, width, and height, respectively of the box. The **Length Segs**, **Width Segs**, and **Height Segs** spinners are used to define the number of divisions or segments along each axis of the object. By default, the **Generate Mapping Coords.** check box is selected by default. As a result, mapping coordinates are created automatically with a projection appropriate to the shape of the box. You can select the **Real-World Map Size** check box to correct the scale of the texture mapped materials that are applied to the box. This option lets you create a material and specify the actual width and height of a 2D texture map in the **Material Editor**.



Note

*After creating a primitive in the viewport if you right-click in the viewport to exit the tool, the **Parameters** rollout will disappear from the **Create** tab. In such a case, to modify the parameters of the primitive, make sure the primitive is selected in the viewport and then choose the **Modify** tab in the **Command Panel**; the **Parameters** rollout will be displayed in the **Modify** tab.*

Creating a Sphere

Menu bar:	Create > Standard Primitives > Sphere
Command Panel:	Create > Geometry > Standard Primitives > Object Type rollout > Sphere

To create a sphere, activate a viewport by clicking in it and choose the **Sphere** tool from the **Object Type** rollout; the **Name and Color**, **Creation Method**, **Keyboard Entry**, and **Parameters** rollouts will be displayed, as shown in Figure 2-21. Press and hold the left mouse button to specify the center of the sphere and then drag the cursor to define the radius of the sphere. Release the left mouse button; the sphere of the specified radius will be created, as shown in Figure 2-22. Note that the sphere will be displayed in all viewports.

Various rollouts used to create and modify the sphere are discussed next.

Creation Method Rollout

The options in this rollout are used for creating a sphere dynamically. By default, the **Center** radio button is selected in this rollout. As a result, the starting point is at the center of the sphere. You can select the **Edge** radio button to set the starting point on an edge at the surface of the sphere.

Parameters Rollout

The options in this rollout are used to modify the parameters of the sphere. The **Radius** and **Segments** spinners are used to specify the radius and divisions, respectively for the sphere. By default, the **Smooth** check box is selected, therefore, the sphere appears smooth. If this check box is cleared, it will give a faceted appearance to the sphere. The **Hemisphere** spinner is used to create a partial sphere. By default, the **Chop** radio button is selected. As a result, the starting point is at the center of the sphere. If you select the **Squash** radio button, the hemisphere will have the same number of vertices and faces as in the complete sphere. On selecting the **Slice On** check box, the **Slice From** and **Slice To** spinners will be enabled. Set the values in the **Slice From** and **Slice To** spinners to specify the start and end angle to create

Evaluation Copy. Do not reproduce. For information visit www.cadcim.com

a partial sphere. By default, the pivot point of the sphere is located at its center. If you select the **Base To Pivot** check box, then the pivot point of the sphere will be at its base.

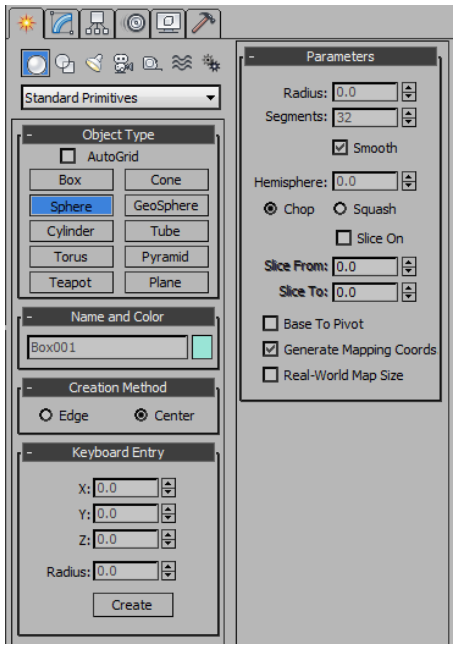

Figure 2-21 *Various rollouts to create a sphere*

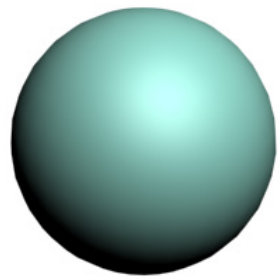

Figure 2-22 *A sphere displayed in the viewport*

Creating a GeoSphere

Menu bar:	Create > Standard Primitives > GeoSphere
Command Panel:	Create > Geometry > Standard Primitives > Object Type rollout > GeoSphere

The **GeoSphere** tool creates a more regular surface than the **Sphere** tool. To create a geosphere, activate the required viewport and choose the **GeoSphere** tool from the **Object Type** rollout; the **Name and Color**, **Creation Method**, **Keyboard Entry**, and **Parameters** rollouts will be displayed, as shown in Figure 2-23. Press and hold the left mouse button to specify the center of the geosphere and then drag the cursor to define the radius of the geosphere. Next, release the left mouse button to get the desired radius; a geosphere will be created, as shown in Figure 2-24.

Various rollouts used to create and modify the geosphere are discussed next.

Creation Method Rollout

The options in this rollout are used for creating a geosphere dynamically. By default, the **Center** radio is selected. As a result, the starting point is at the center of the geosphere. You can select the **Diameter** radio button to specify the first point on an edge at the surface of the geosphere.

Evaluation Copy. Do not reproduce. For information visit www.cadcim.com

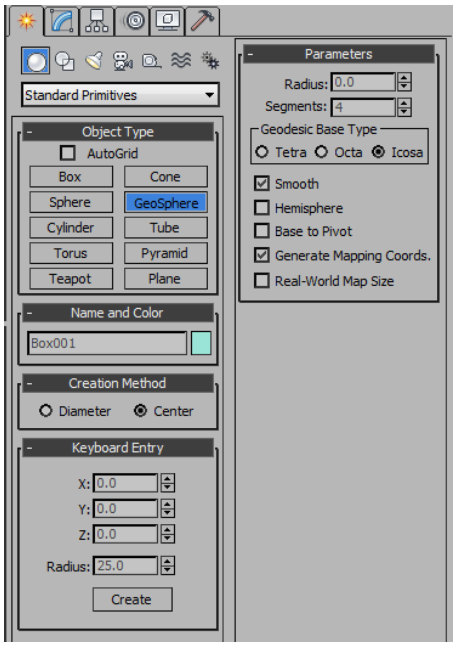

Figure 2-23 *Various rollouts to create a geosphere*

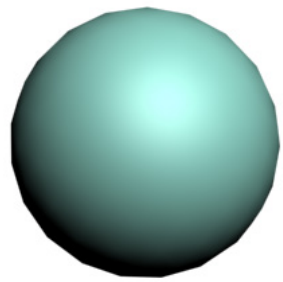

Figure 2-24 *A geosphere displayed in the viewport*

Parameters Rollout

The options in this rollout are used to modify the geosphere. The **Radius** and **Segments** spinners are used to specify the radius and divisions, respectively for the geosphere. By default, the **Icosa** radio button is selected in the **Geodesic Base Type** area. As a result, the surface of the geosphere will consist of 20-sided polygons and equilateral triangles, as shown in Figure 2-25. You can select the **Tetra** radio button in the **Geodesic Base Type** area, the resulting surface will consist of tetrahedrons and triangular faces, as shown in Figure 2-26. Similarly, if you select the **Octa** radio button, you will get a surface consisting of octagons and triangular faces, as shown in Figure 2-27. By default, the **Smooth** check box is selected. As a result, it makes hemisphere smooth. On selecting the **Hemisphere** check box, one half of the geosphere will be created. If the **Base to Pivot** check box is selected, it will shift the pivot point of the geosphere will be at its base.

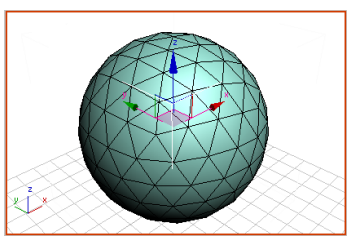

Figure 2-25 *The geosphere displayed on selecting the* ***Icosa*** *radio button*

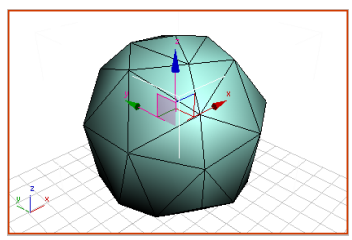

Figure 2-26 *The geosphere displayed on selecting the* ***Tetra*** *radio button*

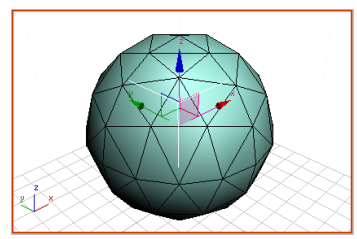

Figure 2-27 *The geosphere displayed on selecting the* ***Octa*** *radio button*

Evaluation Copy. Do not reproduce. For information visit www.cadcim.com

Creating a Cylinder

Menu bar:	Create > Standard Primitives > Cylinder
Command Panel:	Create > Geometry > Standard Primitives > Object Type rollout > Cylinder

The **Cylinder** tool is used to create a cylinder that can be sliced along its major axis. To create a cylinder, activate the required viewport by clicking in it and choose the **Cylinder** tool from the **Object Type** rollout; the **Name and Color**, **Creation Method**, **Keyboard Entry**, and **Parameters** rollouts will be displayed, as shown in Figure 2-28.

Press and hold the left mouse button to specify the center of the base of the cylinder and then drag the cursor to define the radius of the cylinder. Release the left mouse button. Next, move the cursor up or down to define the height of the cylinder. Click after you get the desired height; a cylinder will be created, as shown in Figure 2-29.

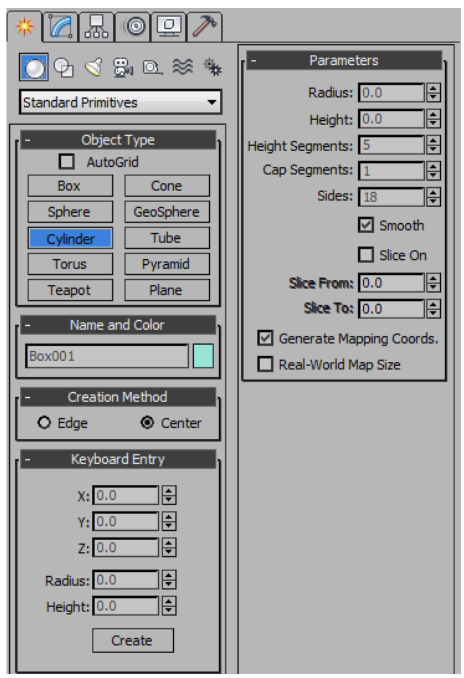

Figure 2-28 Various rollouts to create a cylinder

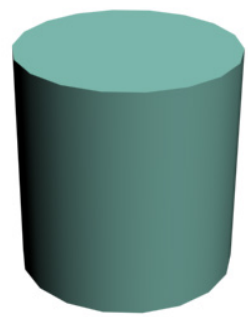

Figure 2-29 A cylinder displayed in the viewport

Various rollouts used to create and modify the cylinder are discussed next.

Creation Method Rollout

The options in this rollout are the same as those discussed in the **Sphere** tool.

Parameters Rollout

The options in this rollout are used to modify the cylinder. The **Radius** spinner is used to set the radius of the cylinder. The **Height** spinner is used to specify the height for the cylinder.

Evaluation Copy. Do not reproduce. For information visit www.cadcim.com

The value in the **Height Segments** spinner defines the number of segments along the height of the cylinder. The value in the **Cap Segments** spinner specifies the number of segments at the top and the bottom of the cylinder. The value in the **Sides** spinner specifies the number of sides on the cylinder. Different shapes of the cylinder can be created by entering different values in the **Sides** spinner. By default, the **Smooth** check box is selected, therefore, the cylinder appears smoother. The **Slice On** check box is the same as described in the **Sphere** tool.

Creating a Cone

Menu:	Create > Standard Primitives > Cone
Command Panel:	Create > Geometry > Standard Primitives > Object Type rollout > Cone

The **Cone** tool is used to create upright or inverted round cones. To create a cone, activate the viewport and then choose the **Cone** tool from the **Object Type** rollout; the **Name and Color**, **Creation Method**, **Keyboard Entry**, and **Parameters** rollouts will be displayed, as shown in Figure 2-30.

Press and hold the left mouse button to specify the center of the base of the cone and then, drag the cursor to define radius 1 for base of the cone. Release the left mouse button and move the cursor up or down to define the height of the cone. Next, click to get the desired height. Move the cursor up or down again and click to define radius 2 of the cone; a cone will be created, as shown in Figure 2-31.

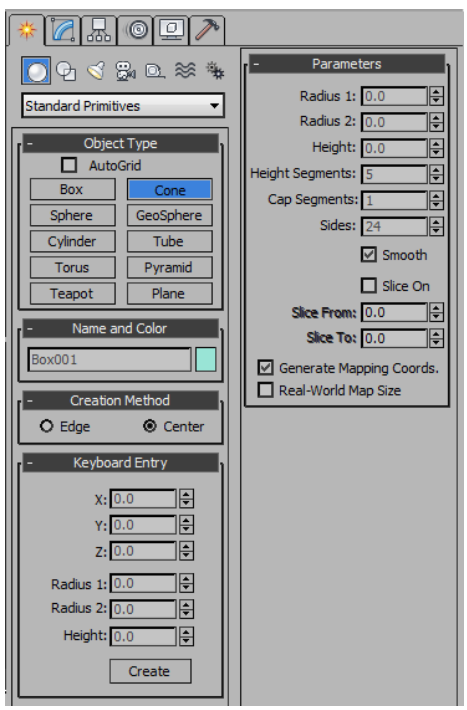

Figure 2-30 *Various rollouts to create a cone*

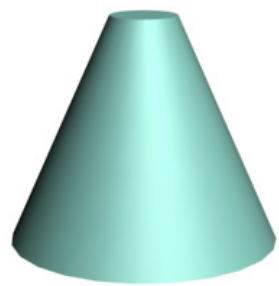

Figure 2-31 *A cone displayed in the viewport*

Evaluation Copy. Do not reproduce. For information visit www.cadcim.com

Various rollouts used to create and modify the cone are discussed next.

Creation Method Rollout

The options in this rollout are the same as those discussed in the **Sphere** tool.

Parameters Rollout

The **Radius 1** and **Radius 2** parameters are used to create pointed or flat-topped cones by specifying the first and second radii for the cone. The **Height** spinner is used to specify the height of the cone. If you specify a negative value for the **Height** spinner, the cone will be created below the construction plane.

Creating a Tube

Menu bar:	Create > Standard Primitives > Tube
Command Panel:	Create > Geometry > Standard Primitives > Object Type rollout > Tube

The **Tube** tool is used to create round and prismatic tubes. The tube primitive is similar to the cylinder primitives with a hole in it. To create a tube, activate the required viewport and choose the **Tube** tool from the **Object Type** rollout; the **Name and Color**, **Creation Method**, **Keyboard Entry**, and **Parameters** rollouts will be displayed, as shown in Figure 2-32.

Press and hold the left mouse button to specify the center of the tube and then drag the cursor to define the first radius of the tube. It can be the inner or the outer radius of the tube. Next, release the left mouse button, move the cursor, and then click to define the second radius. Next, move the cursor up or down and click to get the desired height of the tube; a tube will be created, as shown in Figure 2-33.

Various rollouts used to create and modify the tube are discussed next.

Creation Method Rollout

The options in this rollout are the same as those discussed in the **Sphere** tool.

Parameters Rollout

The options in this rollout are used to modify the tube. The **Radius 1** and **Radius 2** spinners are used to specify the inner and outer radii of the tube. The larger value represents the outer radius while the smaller value represents the inner radius. The **Height** spinner is used to specify the height of the tube. If you specify negative value for this parameter, the tube will be created below the construction plane. The other options in this rollout are the same as those described in the **Cylinder** tool.

Creating a Torus

Menu bar:	Create > Standard Primitives > Torus
Command Panel:	Create > Geometry > Standard Primitives > Object Type rollout > Torus

Evaluation Copy. Do not reproduce. For information visit www.cadcim.com

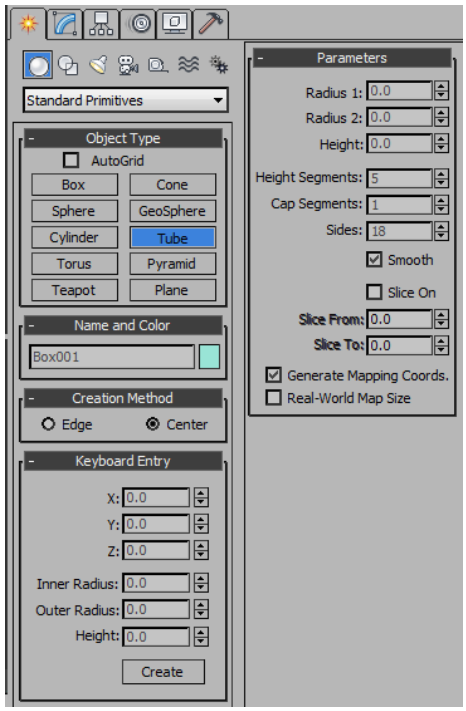

Figure 2-32 *Various rollouts to create a tube*

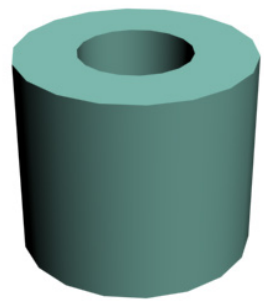

Figure 2-33 *A tube displayed in the viewport*

The **Torus** tool is used to create doughnut like shapes. To create a torus, activate the required viewport and choose the **Torus** tool from the **Object Type** rollout; the **Name and Color**, **Creation Method**, **Keyboard Entry**, and **Parameters** rollouts will be displayed, as shown in Figure 2-34.

Press and hold the left mouse button to specify the center of the torus and then drag the cursor to define the radius of the torus. Release the left mouse button and then drag the cursor to adjust the radius of the circular cross-section of the torus. Click to get the desired radius; a torus will be created, as shown in Figure 2-35.

Various rollouts used to create and modify the torus are discussed next.

Creation Method Rollout

The options in this rollout are the same as those discussed in the **Sphere** tool.

Parameters Rollout

The options in this rollout are used to modify the torus. The **Radius 1** spinner is used to specify the radius for the ring of the torus. Therefore, you can specify the distance from the center of the torus to the center of the cross-sectional circle in this spinner. By default, the value of the **Radius 2** spinner is set to 10. This spinner specifies the radius of the cross-sectional circle. The value in the **Rotation** spinner defines the degree of rotation of the circular cross-section of the torus. The value in the **Twist** spinner specifies how much the circular cross-section of the torus can

Evaluation Copy. Do not reproduce. For information visit www.cadcim.com

be twisted. The **Segments** spinner defines the number of segments around the circumference of the torus. The **Sides** value specifies the number of sides in the circular cross-section of the torus. In the **Smooth** area of the **Parameters** rollout, there are four radio buttons. By default, the **All** radio button is selected. As a result, smoothness is applied to all surfaces of the torus. You can select the **Sides** radio button to apply smoothness between adjacent segments. If you select the **Segments** radio button, smoothness is applied to the segments individually. It results in the formation of ring-like segments along the torus. Select the **None** radio button, if you do not want to apply smoothness to the torus. The function of the **Slice On** check box is the same as described for the **Sphere** tool.

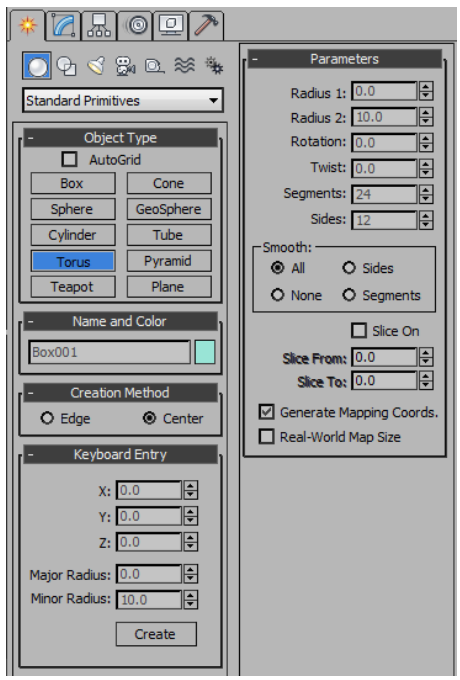

Figure 2-34 *Various rollouts to create a torus*

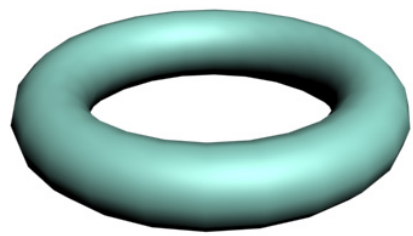

Figure 2-35 *A torus displayed in the viewport*

Creating a Pyramid

Menu bar:	Create > Standard Primitives > Pyramid
Command Panel:	Create > Geometry > Standard Primitives > Object Type rollout > Pyramid

To create a pyramid, activate the viewport and choose the **Pyramid** tool from the **Object Type** rollout; the **Name and Color**, **Creation Method**, **Keyboard Entry**, and **Parameters** rollouts will be displayed, as shown in Figure 2-36.

Press and hold the left mouse button to specify the first corner of the pyramid and then drag the cursor to define the width and depth of the pyramid. Release the left mouse button and drag the cursor upward. Click after you get the desired height; a pyramid will be created, as shown in Figure 2-37.

Evaluation Copy. Do not reproduce. For information visit www.cadcim.com

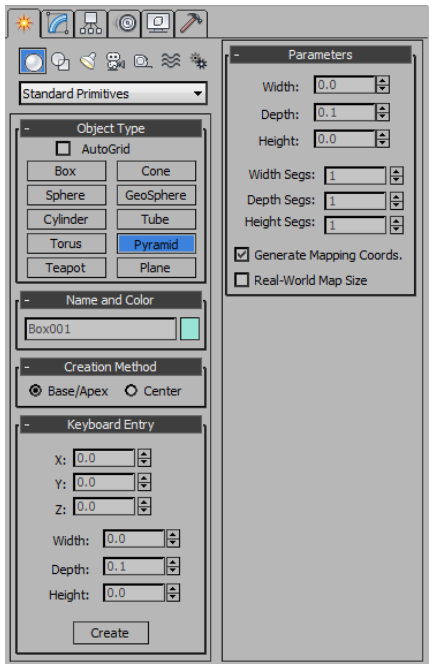

Figure 2-36 *Various rollouts to create a pyramid*



Figure 2-37 *A pyramid displayed in the viewport*

Various rollouts used to create and modify the pyramid are discussed next.

Creation Method Rollout

The options in this rollout are used for creating a pyramid dynamically. By default, the **Base/Apex** radio button is selected. As a result, the first point is specified as the first corner of the base of the pyramid. You can select the **Center** radio button to specify the first point as the center of the base of the pyramid.

Parameters Rollout

The options in this rollout are used to modify the pyramid. The **Width, Depth,** and **Height** spinners are used to specify the width, depth, and height, respectively of the pyramid. The values in the **Width Segs**, **Depth Segs**, and **Height Segs** spinners define the number of segments on the corresponding sides of the pyramid.

Creating a Plane

Menu bar:	Create > Standard Primitives > Plane
Command Panel:	Create > Geometry > Standard Primitives > Object Type rollout > Plane

To create a plane, activate the required viewport and then choose the **Plane** tool from the **Object Type** rollout; the **Name and Color**, **Creation Method**, **Keyboard Entry**, and **Parameters** rollouts will be displayed, as shown in Figure 2-38.

Evaluation Copy. Do not reproduce. For information visit www.cadcim.com

Press and hold the left mouse button to specify the first corner of the plane and then drag the cursor to define the length and width of the plane. Release the left mouse button; a plane will be created, as shown in Figure 2-39.

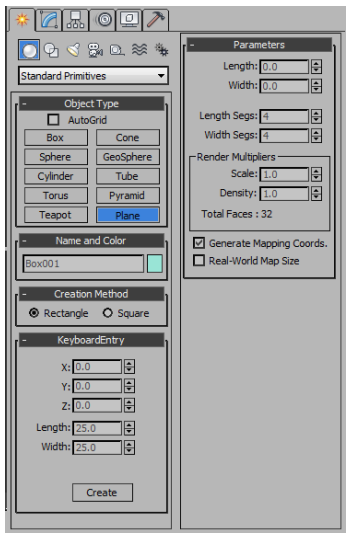

Figure 2-38 *Various rollouts to create a plane*

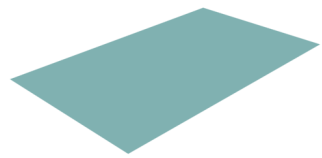

Figure 2-39 *A plane displayed in the viewport*

Various rollouts used to create and modify the plane are discussed next.

Creation Method Rollout

The options in this rollout are used for creating a plane dynamically. By default, the **Rectangle** radio button is selected. As a result, the first point is specified as the corner of a rectangular plane. You can select the **Square** radio button to specify the first point as the center of a square plane. Note that in the case of a square plane, the length and width of the plane will be equal.

Parameters Rollout

The options in this rollout are used to modify the plane. The **Length** and **Width** spinners are used to specify the length and width, respectively of the plane. The values in the **Length Segs** and **Width Segs** spinners define the number of segments along the length and width of the plane, respectively. The **Render Multipliers** area is used to set the multipliers for rendering. The **Scale** spinner is used to specify the value by which the length and width will be multiplied at rendering. The **Density** spinner is used to specify the value by which the number of segments along the length and width will be multiplied at rendering.

Creating a Teapot

Menu bar:	Create > Standard Primitives > Teapot
Command Panel:	Create > Geometry > Standard Primitives > Object Type rollout > Teapot

Evaluation Copy. Do not reproduce. For information visit www.cadcim.com

To create a teapot, activate the required viewport and choose the **Teapot** tool from the **Object Type** rollout; the **Name and Color**, **Creation Method**, **Keyboard Entry**, and **Parameters** rollouts will be displayed, as shown in Figure 2-40.

Press and hold the left mouse button to define the center of the bottom face and then drag the cursor to define the radius of the teapot. Release the left mouse button after you get the desired radius; a teapot will be created with the pivot point at the center of its base, as shown in Figure 2-41.

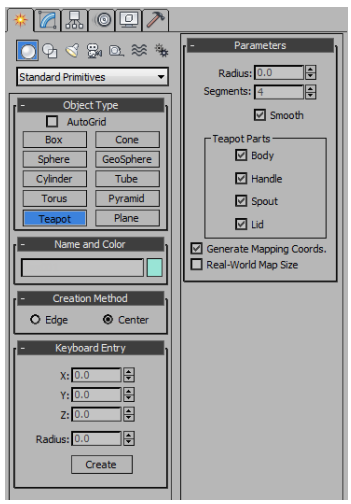

Figure 2-40 *Various rollouts to create a teapot*



Figure 2-41 *A teapot displayed in the viewport*

Various rollouts used to create and modify the teapot are discussed next.

Creation Method Rollout

The options in this rollout are the same as those discussed in the **Sphere** tool.

Parameters Rollout

The options in this rollout are used to modify the teapot. The **Radius** spinner is used to specify the overall size of the teapot. Therefore, it specifies the distance from the center of the teapot to the body parameter. The **Segments** spinner is used to specify the number of divisions in each quadrant of the body. By default, the **Smooth** check box is selected. Therefore, all parts of the teapot will be smoothened. A teapot has four parts: body, handle, spout, and lid. If you want to remove any one of the parts, clear the check box corresponding to that part in the **Teapot Parts** area of the **Parameters** rollout. You can also use different parts of a teapot individually to make another object. For example, you can use the handle of the teapot for creating a coffee mug.

Evaluation Copy. Do not reproduce. For information visit www.cadcim.com

RENDERING A STILL IMAGE

Menu bar:	Rendering > Render
Toolbar:	Main Toolbar > Render Production
Keyboard:	SHIFT + Q

Rendering is a process of generating a 2D image from a 3D scene. It shows the lighting effects, materials applied, background, and other settings that you have applied to the scene. The basic rendering for a still scene is discussed next while the advance rendering for the animated scenes will be discussed in the later chapters.



To render a still image, activate the viewport and choose the **Render Setup** tool from the **Main Toolbar**; the **Render Setup: Default Scanline Renderer** dialog box will be displayed. The **Common** tab is chosen by default in this dialog box. In the **Common Parameters** rollout, make sure that the **Single** radio button is selected in the **Time Output** area. This will enable you to render a single frame at a time. In the **Output Size** area, set the parameters or use the default ones and then choose the **Render** button at the lower right corner in the dialog box; the rendered image will be displayed in the **Perspective, frame 0, Display Gamma:2.2, RGBA Color16 Bits/Channel (1:1)** window, as shown in Figure 2-42.

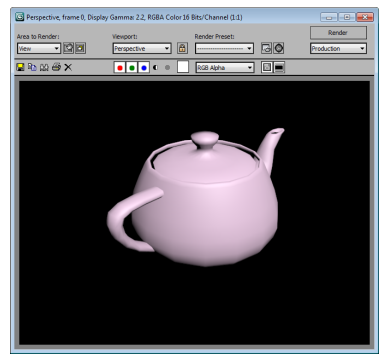

Figure 2-42 *The* ***Perspective, frame 0, RGBA Color16 Bits/Channel (1:1)*** *window*

Here, Perspective refers to the name of the viewport that you have selected at rendering and **frame 0** refers to the number of frame that has been rendered.



Note

To render a view quickly, choose the ***Render Production*** *tool from the* ***Main Toolbar*** *or press the F9 key.*



To save the rendered image, choose the **Save Image** button in the **Perspective, frame 0, Display Gamma:2.2, RGBA Color 16 Bits/Channel (1:1)** window; the **Save Image** dialog box will be displayed. Now, select the type of image format from the **Save as type** drop-down list and enter the name of the image in the **File name** text box. Next, browse to the folder where you want to save the scene and choose the **Save** button; a dialog box will be displayed. You can adjust the settings for the file format you have chosen in this dialog box. Use the default settings and choose the **OK** button; the image file will be saved at the selected location.



Note

In later chapters, the ***Perspective, frame 0, Display Gamma:2.2, RGBA Color16 Bits/Channel (1:1)*** *window is referred to as the* ***Rendered Frame*** *window.*

Evaluation Copy. Do not reproduce. For information visit www.cadcim.com

Quicksilver Hardware Renderer

By default, a 3ds Max scene is rendered using the Scanline renderer. However, if you choose the Quicksilver hardware renderer, you can achieve various rendering styles such as wireframe rendering, clay rendering, non-photorealistic rendering, and so on. To do so, you need to follow the steps given next.

1. Activate any of the viewport and choose the **Render Setup** tool from the **Main Toolbar**; the **Render Setup: Default Scanline Renderer** dialog box will be displayed. The **Common** tab is chosen by default in this dialog box.

2. Collapse the **Common Parameters** rollout in this tab and expand the **Assign Renderer** rollout. In this rollout, choose the **Choose Renderer** button at the right of the **Production** text box; the **Choose Renderer** dialog box will be displayed. Select the **Quicksilver Hardware Renderer** option and choose the **OK** button to exit the **Choose Renderer** dialog box. Notice the change in the **Render Setup** dialog box.

3. Choose the **Renderer** tab; various rollouts will be displayed, refer to Figure 2-43. In the **Visual Style** area of the **Visual Style & Appearance** rollout, various options are available in the **Rendering Level** drop-down list, as shown in Figure 2-44.

4. To change the rendering style, you can select the required option from the **Rendering Level** drop down list. Next, choose the **Render** button at the lower right corner of the dialog box; the rendered image will be displayed as per the option selected in the drop-down list.

NVIDIA iray Renderer

The NVIDIA iray renderer creates physically accurate renderings by tracing the light paths. The performance of the renderer can be improved if the system is equipped with a graphics card having a CUDA (Compute Unified Device Architecture) enabled Graphic Processing Unit (GPU).

When you change the current renderer to the NVIDIA iray renderer using the **Render Setup** dialog box, the **iray**, **Advanced Parameters**, **Displacement Parameters**, **Hardware Resources**, and **Motion Blur** rollouts will be displayed in the **Render Setup** dialog box. The procedure to change the renderer has been explained in detail in the previous section. Figure 2-45 shows the **iray** rollout in the **Render Setup** dialog box. It has three radio buttons namely: **Time**, **Iterations**, and **Unlimited**. By selecting the **Time** radio button, you can specify the duration of the rendering. By selecting the **Iterations** radio button, you can specify the number of iterations (passes) to be computed before showing the final render. If the **Unlimited** radio button is selected, rendering will continue for indefinite time and stops when satisfactory quality of rendering is achieved. The rendering done by the iray renderer appears more grainy in the first few passes. The graininess decreases as you increase the number of passes. The NVIDIA iray renderer renders glossy reflections and self illuminating objects with much more precision as compared to the other renderers. However, this renderer supports only certain materials, maps, and shader types.

Evaluation Copy. Do not reproduce. For information visit www.cadcim.com

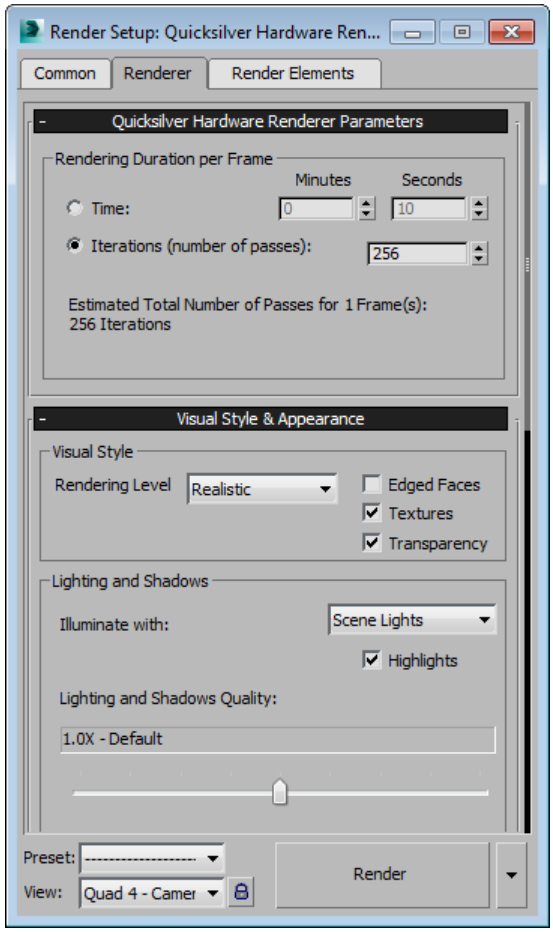

*Figure 2-43 The **Render Setup: Quicksilver Hardware Renderer** dialog box*

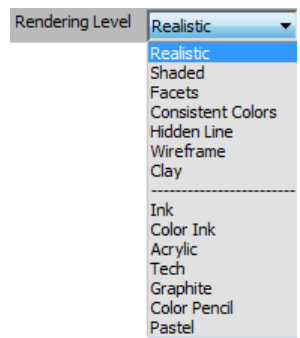

*Figure 2-44 The **Rendering Level** drop-down list*

Changing the Background Color

Menu bar:	Rendering > Environment
Keyboard:	8

By default, the background color of the final output is black at the time of rendering. To change the background color, choose **Rendering > Environment** from the menu bar; the **Environment and Effects** dialog box will be displayed, as shown in Figure 2-46. In this dialog box, the **Environment** tab is chosen by default. The **Common Parameters**, **Exposure Control**, and **Atmosphere** rollouts will be displayed under this tab. In the **Common Parameters** rollout, the **Background** area is used to change the background color of the scene on rendering. In the **Background** area, choose the color swatch corresponding to the **Color** parameter; the **Color Selector: Background Color** dialog box will be displayed. Select a new color and choose the **OK** button. Next, close the **Environment and Effects** dialog box; the background will display the new color on rendering.

Evaluation Copy. Do not reproduce. For information visit www.cadcim.com

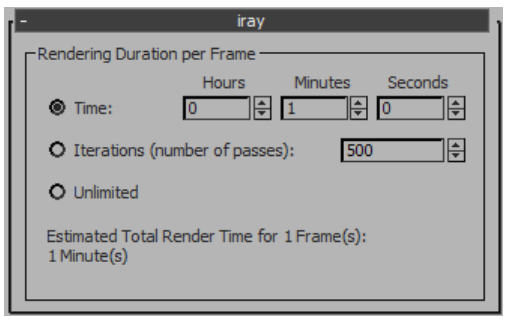

Figure 2-45 *The* ***iray*** *rollout in the* ***Render Setup*** *dialog box*

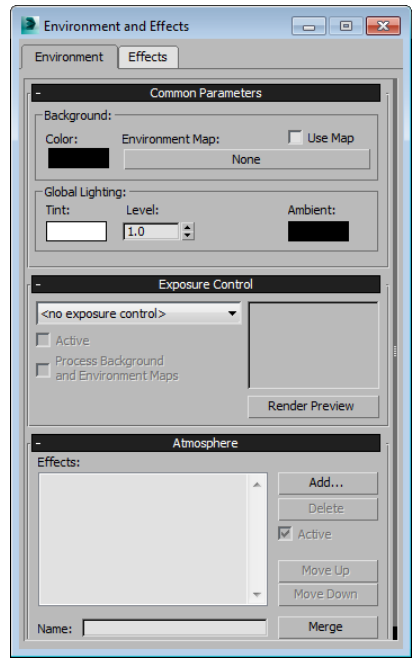

Figure 2-46 *The* ***Environment and Effects*** *dialog box*

TUTORIALS

Tutorial 1

In this tutorial, you will create 3D model of a table with drawers, as shown in Figure 2-47, by using the standard primitives. **(Expected time: 30 min)**



Figure 2-47 *The model of a table with drawers*

The following steps are required to complete this tutorial:

a. Create the project folder.
b. Create left and right boxes of table.

Evaluation Copy. Do not reproduce. For information visit www.cadcim.com

c. Align boxes.
d. Create the drawer.
e. Create clones of the drawer.
f. Create outer faces of the table.
g. Create knobs for drawers of the table.
h. Change background color of the scene.
i. Save and render the scene.

Creating the Project Folder

Before starting a new scene, it is recommended that you create a project folder. Creating a project folder helps you keep all files of a project in an organized manner. Open the Windows Explorer and browse to the *Documents* folder. In this folder, create a new folder with the name *3dsmax2015*. The *3dsmax2015* folder will be the main folder and it will contain all the project folders that you will create while doing tutorials of this textbook. Now, you will create first project folder for Tutorial 1 of this chapter. To do so, you need to follow the steps given next:

1. Start Autodesk 3ds Max 2015.

2. If 3ds Max is already running, you need to reset it. To do so, choose **Reset** from the **Application** menu. If the current work is not saved, the **Autodesk 3ds Max 2015** message box is displayed. Next, choose the desired option from this message box; the **3ds Max** message box is displayed. Choose the **Yes** button from the message box; a new screen is displayed with default settings.



Note

*The **Reset** option is used to reset 3ds Max settings such as viewport configuration, snap settings, the **Material Editor** dialog box, background image, and so on. It also restores the startup defaults.*

3. Choose the **Application** button; the **Application** menu is displayed. Next, choose **Manage > Set Project Folder** from it; the **Browse For Folder** dialog box is displayed.

4. In the **Browse For Folder** dialog box, navigate to *\Documents\3dsmax2015*. Next, choose the **Make New Folder** button to create a new folder with the name *c02_tut1*. Next, choose the **OK** button to close the **Browse For Folder** dialog box.

5. Choose **Save** from the **Application** menu; the **Save File As** dialog box is displayed.



Note

*The scenes created in 3ds Max are saved with the .max extension. As the project folder is already created, the path \Documents\3dsmax2015\c02_tut1\scenes is displayed in the **Save in** drop-down list of the **Save File As** dialog box.*



Tip: *After setting the project when you open or save a scene, 3ds Max uses the scenes folder inside the project folder by default.*

Evaluation Copy. Do not reproduce. For information visit www.cadcim.com

6. Enter **c02tut1** in the **File name** edit box and then choose the **Save** button to close the dialog box.



Note

1. When you start 3ds Max, the last project that you have worked with is opened and an empty scene is created with the name Untitled.

2. You can also save a scene in the previous versions (2012 to 2014) of 3ds Max. To do so, select the desired option from the ***Save as type*** *drop-down in the* ***Save File As*** *dialog box.*

3. It is recommended that you frequently save the files while you are working on them by pressing the CTRL+S keys.

Autodesk 3ds Max creates a backup of the scene and saves changes periodically. In case of system failure, you can open the auto backup scene file and continue working on it. If you have not created the project folder on Windows 7, the default path to save the auto backup file is as follows: *C:\users\<username>\My Documents\3dsmax\autoback*. However, if you have created the project folder, the backup file will be saved in the *autoback* subfolder of the project folder. When 3ds Max is saving a file, the information, "**Autosave in progress... (Press ESC to cancel)**" is displayed in the prompt line at the bottom of the interface. If the size of the file is too large and it is taking time to save, you can press ESC to interrupt the saving process. You can also set the number of autoback files, their names, and backup time interval. To do so, choose **Customize > Preferences** from the menu bar; the **Preferences Settings** dialog box will be displayed. Next, choose the **Files** tab and then set the options as required in the **Auto Backup** area of dialog box.

Creating Left and Right Boxes of Table

In this section, you need to create the basic shape of table. You will use the **Box** tool from standard primitives to create the shape.

1. Choose **Create > Geometry** in the **Command Panel**; **Standard Primitives** is displayed in the drop-down list below the **Geometry** button. Also, the **Object Type** rollout is displayed in the **Command Panel**. Next, choose the **Box** tool from the **Object Type** rollout.

2. Activate the Top viewport. Press and hold the left mouse button at the upper left corner of the viewport, drag the cursor to the lower right corner and then release the left mouse button to set the length and width of the box. Next, move the mouse in the upward direction and click in the viewport to set the height of the box.

3. In the **Parameters** rollout, enter the values as given below:

   Length: **90** Width: **75** Height: **95**

4. Choose the **Zoom Extents All** tool from the viewport navigation controls to view the box; the box is displayed in all viewports, as shown in Figure 2-48.



Evaluation Copy. Do not reproduce. For information visit www.cadcim.com

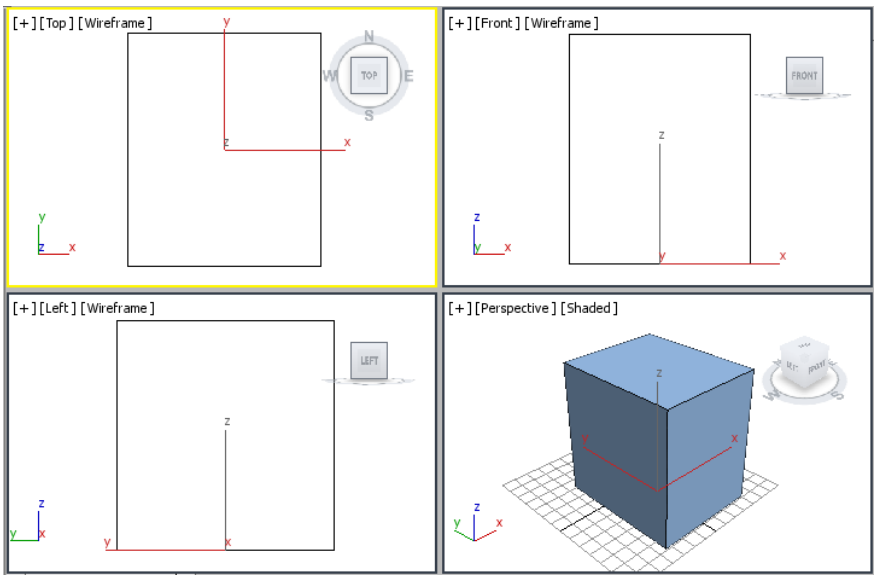

Figure 2-48 *The box displayed in viewports*

5. In the **Name and Color** rollout, enter **left box** and press ENTER; the object is named as *left box*.

6. Choose the color swatch in the **Name and Color** rollout to change the color of *left box*; the **Object Color** dialog box is displayed. Choose the **Add Custom Colors** button from this dialog box; the **Color Selector: Add Color** dialog box is displayed. In this dialog box, enter the values as given next:

   Red: **224** Green: **143** Blue: **87**

7. Choose the **Add Color** button in the **Color Selector: Add Color** dialog box; the selected color is displayed in one of the color boxes in the **Custom Colors** area of the **Object Color** dialog box. Choose the **OK** button in the Object color dialog box to apply the color to *left box*.

8. Create another box in the Top viewport by using the methods described earlier. Enter the following values in the **Parameters** rollout:

   Length: **90** Width: **80** Height: **25**

9. In the **Name and Color** rollout, enter **right box** and press ENTER; the object is named as *right box*. Also, assign the same color to *right box* that you assigned to *left box*, refer to steps 6 and 7.

Aligning Boxes

In this section, you will align the left and right boxes together.

Evaluation Copy. Do not reproduce. For information visit www.cadcim.com

1. Choose the **Select and Move** tool and make sure *right box* is selected. Move *right box* along the X, Y, and Z axes in all viewports to align it with *left box*, as shown in Figure 2-49. Click in the viewport and choose the **Zoom Extents All** tool from the viewport navigation controls to view the box in all viewports, refer to Figure 2-49.

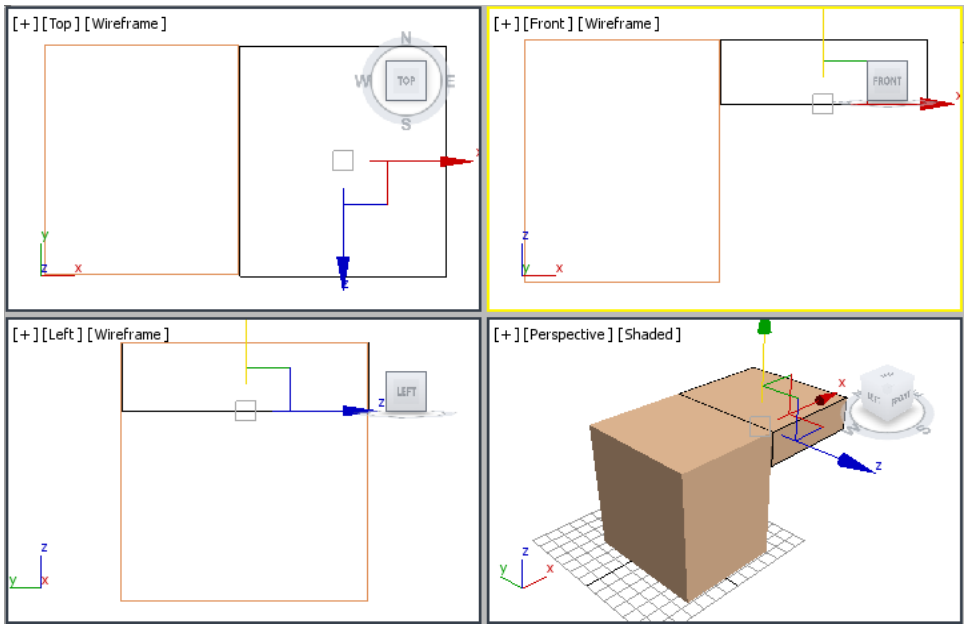

Figure 2-49 *Alignment of left box with right box in viewports*

Note

While aligning the objects, you need to make sure that the objects are aligned properly in all viewports.

Creating the Drawer

In this section, you will create drawers of the table and then clone the drawers.

1. Create another box in the Top viewport and enter the following values in the **Parameters** rollout:

   Length: **90** Width: **55** Height: **25**

2. In the **Name and Color** rollout, enter **drawer001** and press ENTER; the object is renamed. Choose the color swatch to change the color of *drawer001*; the **Object Color** dialog box is displayed. Choose the **Add Custom Colors** button; the **Color Selector: Add Color** dialog box is displayed. In this dialog box, specify the values as given below:

   Red: **177** Green: **88** Blue: **27**

3. Choose the **Add Color** button from the **Color Selector: Add Color** dialog box to add the selected color. The color is displayed in one of the **Custom Color** boxes in the **Object Color** dialog box. Choose the **OK** button; the new color is assigned to *drawer001*.

Evaluation Copy. Do not reproduce. For information visit www.cadcim.com

4. Align *drawer001* with *left box* in viewports using the **Select and Move** tool, as shown in Figure 2-50.

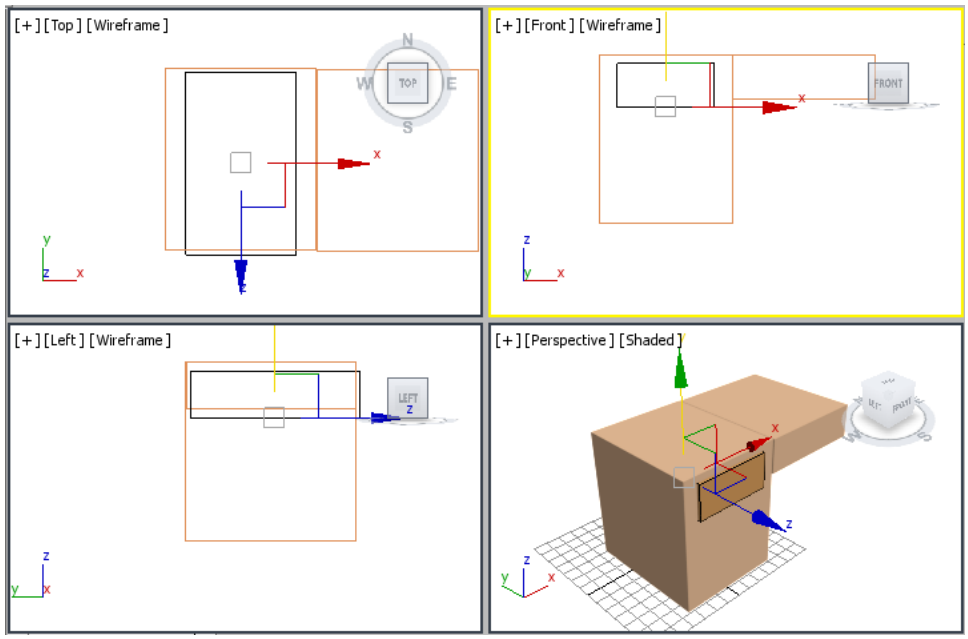

Figure 2-50 *Alignment of drawer001 with left box*

Creating Clones of the Drawer

In this section, you will create copies of *drawer001*.

1. Activate the Front viewport and make sure *drawer001* is selected. Next, move the cursor over the Y axis, press and hold the SHIFT key, and drag *drawer001* downward until the value in the **Y** spinner of the Coordinate display at the bottom of the screen becomes around **-29**. Release the left mouse button and the SHIFT key; the **Clone Options** dialog box is displayed, as shown in Figure 2-51.

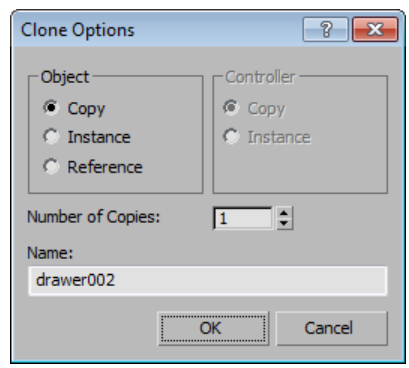

Figure 2-51 *The* ***Clone Options*** *dialog box*

2. Make sure the **Copy** radio button is selected in the **Object** area of the **Clone Options** dialog box. In the **Number of Copies** spinner, enter **2** to create two copies of *drawer001*. Next, choose the **OK** button; two drawers with same dimensions are created, as shown in Figure 2-52.

Evaluation Copy. Do not reproduce. For information visit www.cadcim.com

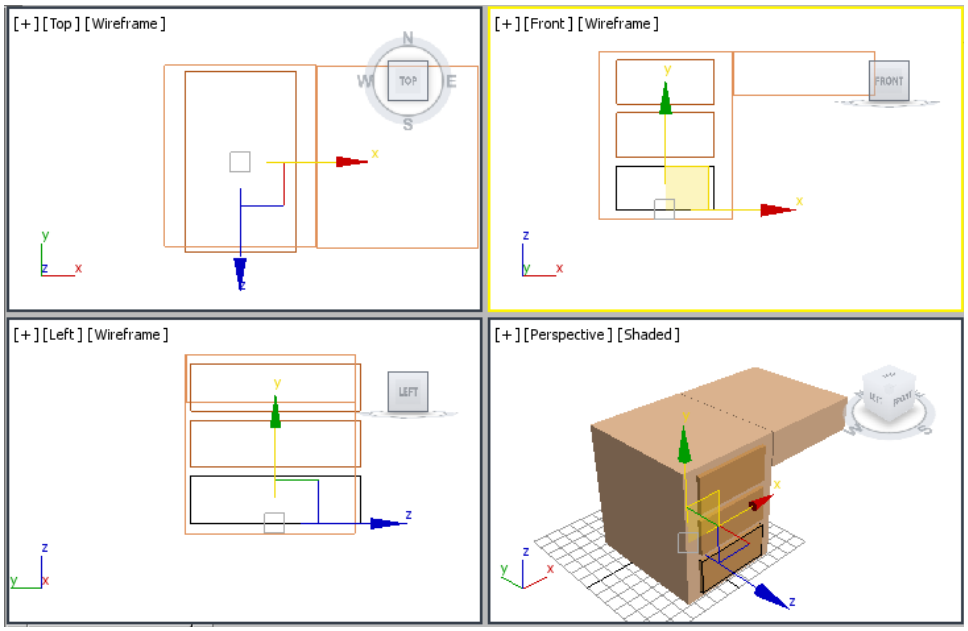

Figure 2-52 *The drawer002 and drawer003 geometry created after cloning drawer001*

Note

The cloned objects are automatically named sequentially as drawer002 and drawer003, based on the name of the original object. You can also clone an object by holding the SHIFT key while rotating or scaling it.

3. Create another box in the Top viewport and in the **Parameters** rollout, enter the values as follows:

   Length: **90** Width: **70** Height: **17**

4. Name the newly created box as *drawer004* and change its color as you did for the drawers created previously.

5. Align *drawer004* with the *right box* in viewports, as shown in Figure 2-53.

Creating Outer Faces of the Table

In this section, you will create outer faces of the table to make it appear more realistic.

1. Create a box in the Left viewport and in the **Parameters** rollout, enter the values given below:

   Length: **95.5** Width: **90** Height: **1.5**

Evaluation Copy. Do not reproduce. For information visit www.cadcim.com

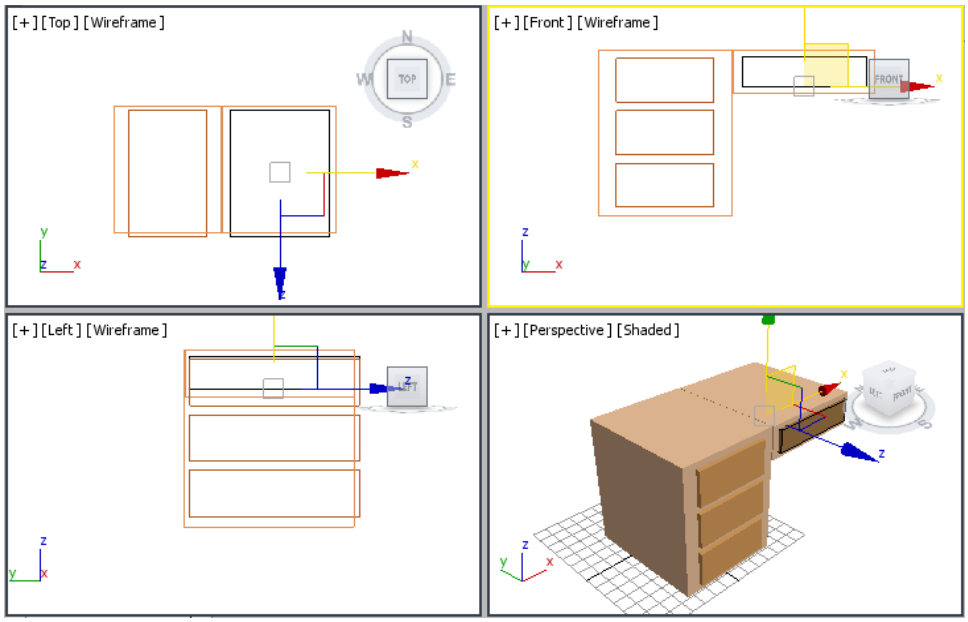

Figure 2-53 *Alignment of drawer004 in all viewports*

2. In the **Name and Color** rollout, enter **left face001** and press ENTER; the box is named as *left face001*. Choose the color swatch to change the color of *left face001*; the **Object Color** dialog box is displayed. Choose the **Add Custom Colors** button from this dialog box; the **Color Selector: Add Color** dialog box is displayed. Enter the following values in the dialog box:

   Red: **134** Green: **59** Blue: **8**

3. Choose the **Select and Place** tool from the **Main Toolbar**. In the Perspective viewport, move the cursor over *left face001* and drag to align it with the left side of *left box*, as shown in Figure 2-54.



4. In the Front viewport, copy *left face001* by using the **Clone Options** dialog box as described earlier; a new face is created with the name *left face002*. Now, align it with the other side of *left box*, as shown in Figure 2-55.

Evaluation Copy. Do not reproduce. For information visit www.cadcim.com

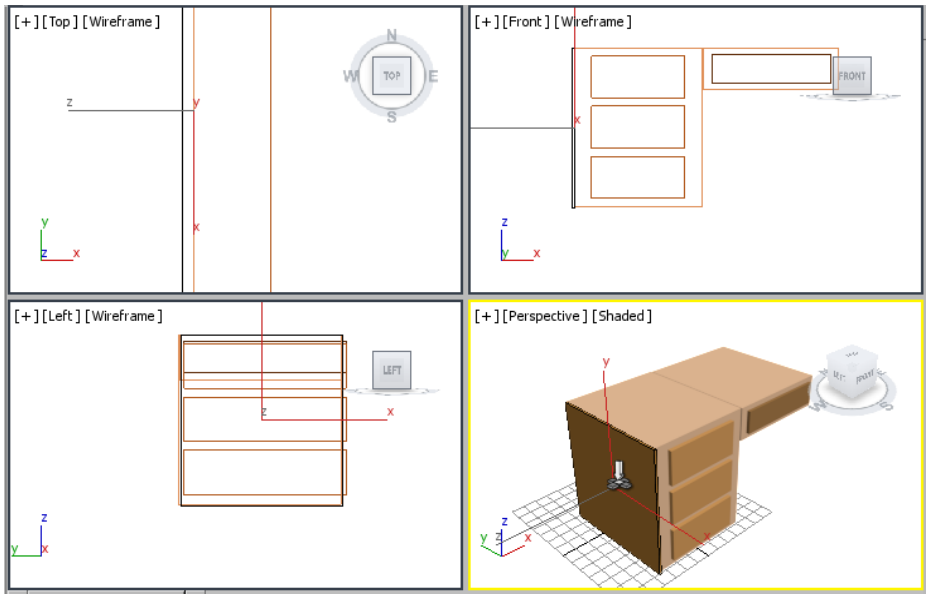

Figure 2-54 *Alignment of left face001 with left side of the left box*

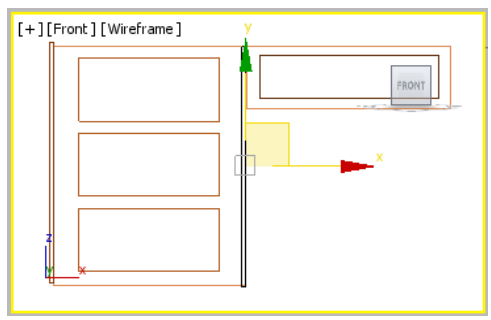

Figure 2-55 *Alignment of left face002*

5. To create the upper face of the table, create another box in the Top viewport using the values given below:

   Length: **90.5** Width: **158.116** Height: **1.5**

6. Name the box as *upper face* and assign the same color to it as assigned to the other faces.

7. Align *upper face* with the top of the table, as shown in Figure 2-56.

Evaluation Copy. Do not reproduce. For information visit www.cadcim.com

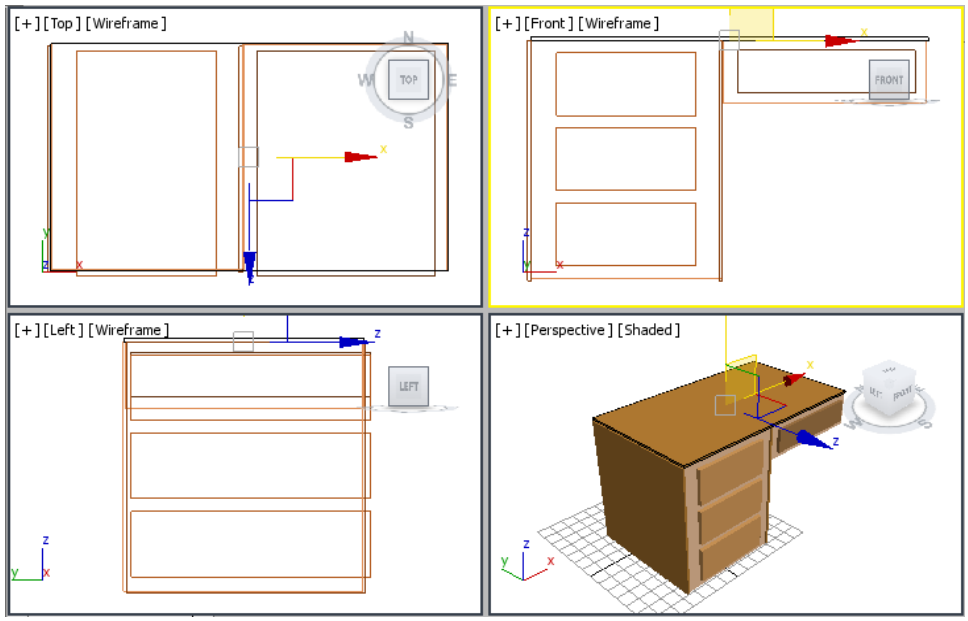

Figure 2-56 *Alignment of upper face with top of the table*

8. Create one more box in the Top viewport using the values given below:

   Length: **90.5** Width: **77** Height: **1.5**

9. Name the box as *lower face* and assign it same color as assigned to other faces.

10. Align *lower face* with the bottom of *left box*, as shown in Figure 2-57.

11. Create another box for the lower face of *right box* in the Top viewport using the following dimensions:

    Length: **90.5** Width: **80** Height: **1.5**

12. Name the box as *right lower face* and assign the same color to it as assigned to the other faces.

13. Align *right lower face* at the bottom of *right box*, as shown in Figure 2-58.

14. Create a box for the right face of *right box* in the Left viewport using the following dimensions:

    Length: **27.5** Width: **90** Height: **1.5**

Evaluation Copy. Do not reproduce. For information visit www.cadcim.com

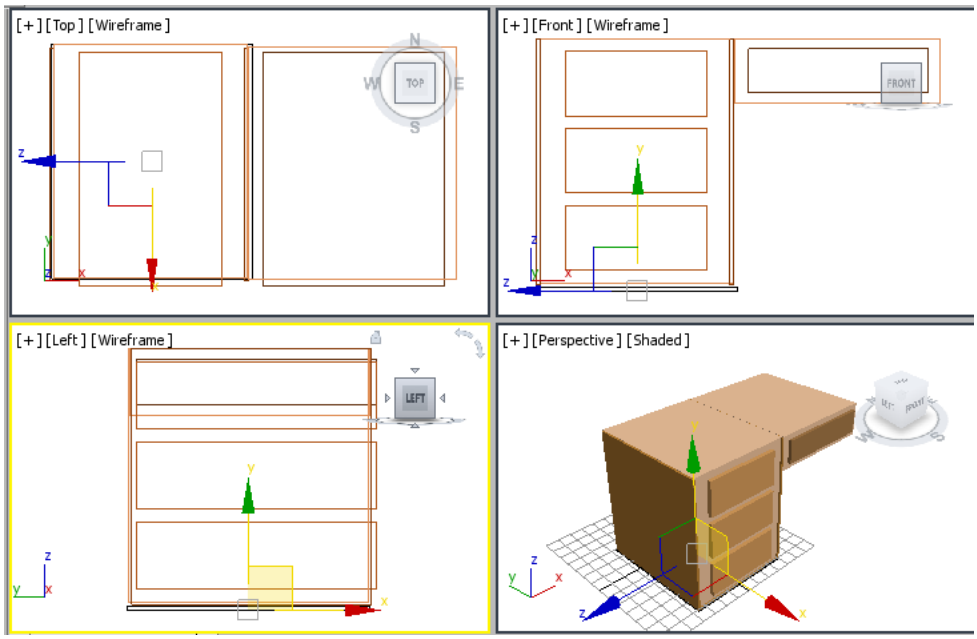

Figure 2-57 *Alignment of lower face with the bottom of left box*

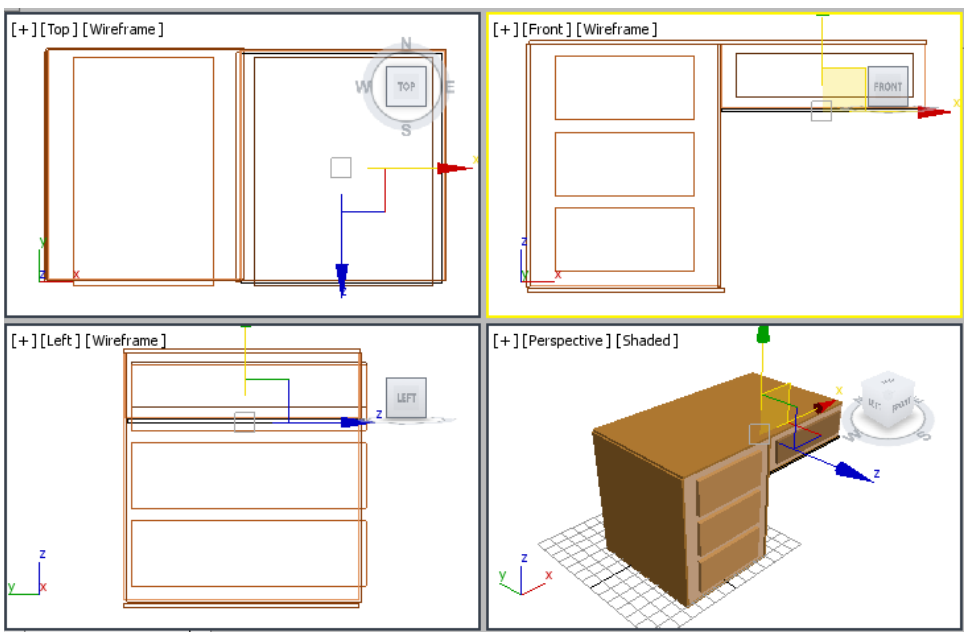

Figure 2-58 *Alignment of right lower face at the bottom of right box of the table*

Evaluation Copy. Do not reproduce. For information visit www.cadcim.com

15. Name the box as *right face* and assign the same color to it as assigned to the other faces.

16. Align *right face* with the right side of *right box*, as shown in Figure 2-59.

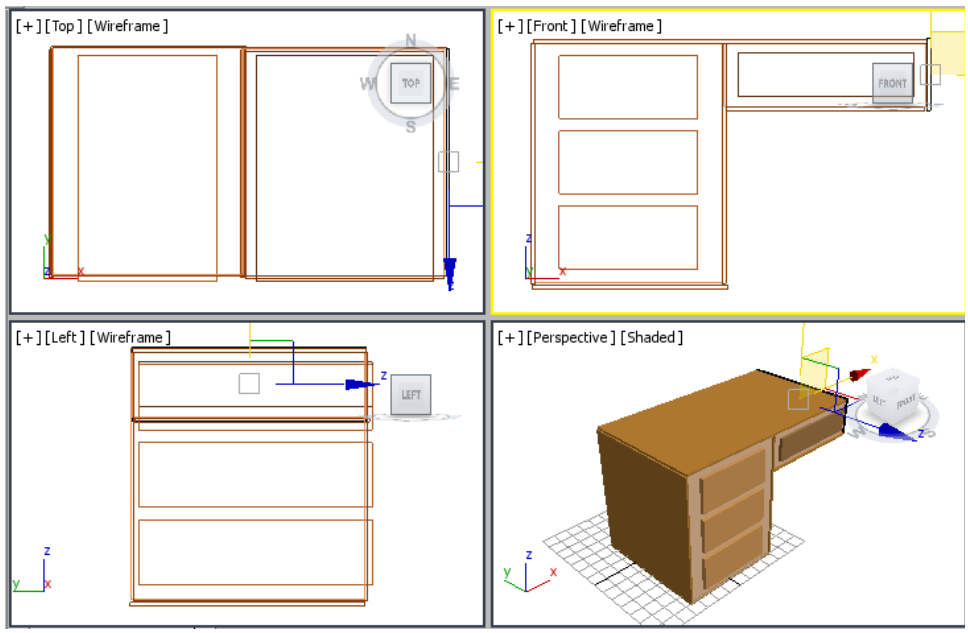

Figure 2-59 *Alignment of right face with the right side of right box of the table*

Creating Knobs for Drawers of the Table

In this section, you will create a knob for one drawer. Next, you will copy the knob for the other drawers.

1. Choose the **Sphere** tool from **Create > Geometry > Standard Primitives > Object Type** rollout of the **Command Panel**.

2. Create a sphere in the Front viewport. In the **Parameters** rollout, enter **2.3** in the **Radius** spinner. Also, make sure the **Smooth** and **Generate Mapping Coords** check boxes and the **Chop** radio button are selected in this rollout.

3. Name the sphere as *knob001* and use the color swatch to change its color to white.

4. Align *knob001* with *drawer001* in all viewports using the **Select and Move** tool, as shown in Figure 2-60.

5. Activate the Front viewport and then create three copies of *knob001* by using the **Clone Options** dialog box as described earlier. The newly created copies are automatically named as *knob002*, *knob003*, and *knob004*. Next, align them in viewports, as shown in Figure 2-61.

Evaluation Copy. Do not reproduce. For information visit www.cadcim.com

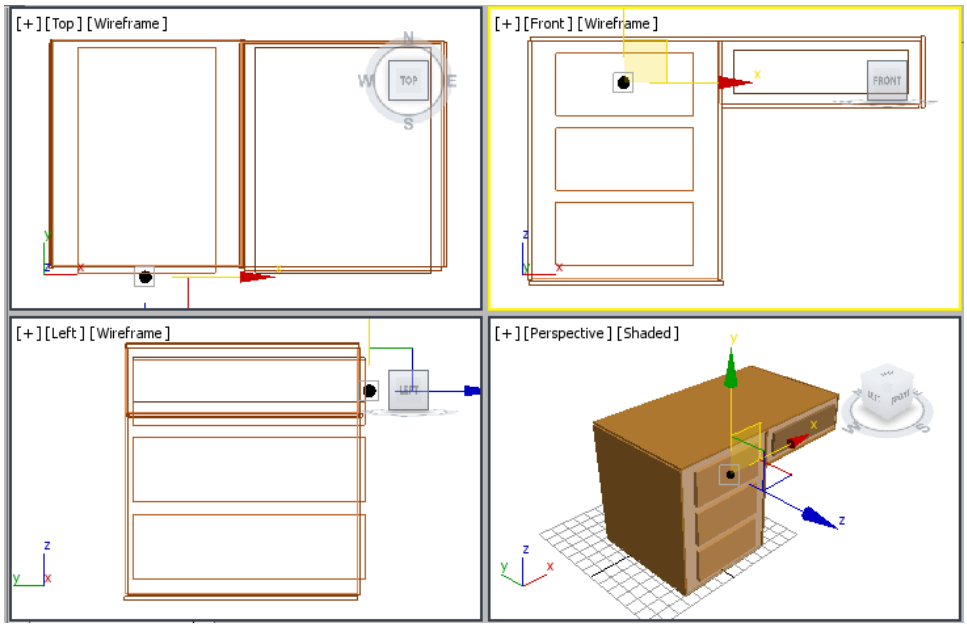

Figure 2-60 *Alignment of knob001 with drawer001*

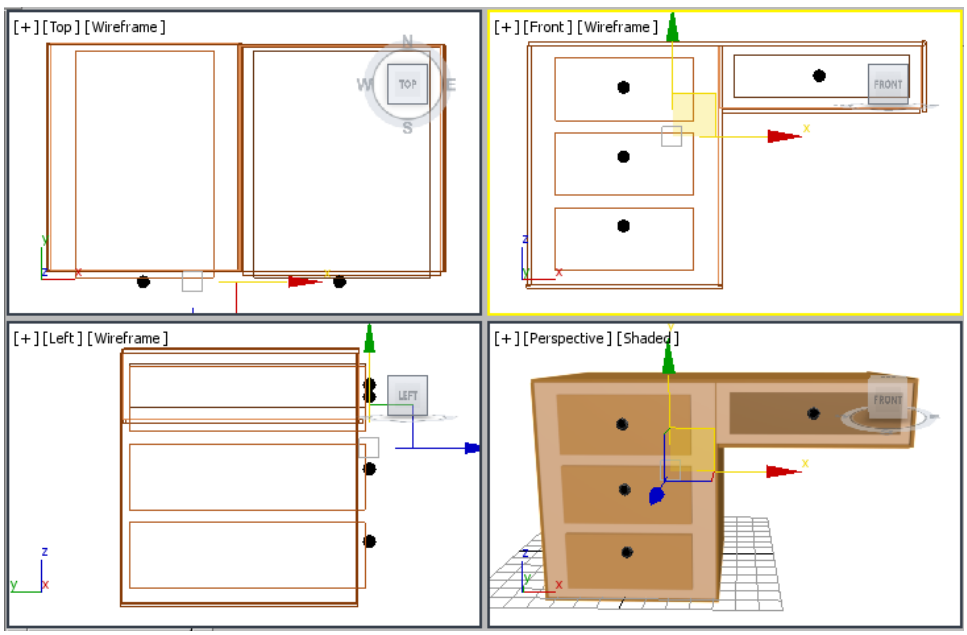

Figure 2-61 *Alignment of knobs in viewports*

6. Set the view of the table in the Perspective viewport using the **Orbit** tool from the viewport navigation controls.



Evaluation Copy. Do not reproduce. For information visit www.cadcim.com

Changing Background Color of the Scene

In this section, you will change background color of the scene.

1. Choose **Rendering > Environment** from the menu bar; the **Environment and Effects** dialog box is displayed with the **Environment** tab chosen by default in this dialog box.

2. In the **Background** area of the **Common Parameters** rollout, choose the color swatch corresponding to the **Color** parameter; the **Color Selector: Background Color** dialog box is displayed. Select the white color and choose the **OK** button.

3. Close the **Environment and Effects** dialog box.

Saving and Rendering the Scene

In this section, you will save the scene that you have created and then render it. You can also view the final rendered image of this model by downloading the *c02_3dsmax_2015_rndr.zip* file from *www.cadcim.com*. The path of the file is as follows: *Textbooks > Animation and Visual Effects > 3ds Max > Autodesk 3ds Max 2015: A Comprehensive Guide*

1. Choose **Save** from the **Application** menu.

2. Activate the Perspective viewport. Next, choose the **Render Production** tool from the **Main Toolbar**; the **Rendered Frame** window is displayed with the final output of the table, as shown in Figure 2-62.



Figure 2-62 *The final output after rendering*

Tutorial 2

In this tutorial, you will create the 3D model of a park bench, as shown in Figure 2-63, using standard primitives. **(Expected time: 90 min)**

The following steps are required to complete this tutorial:

a. Create the project folder.
b. Create horizontal back supports.

Evaluation Copy. Do not reproduce. For information visit www.cadcim.com

c. Group horizontal back supports.
d. Create horizontal seat supports.
e. Group horizontal Seat Supports
f. Create vertical back supports.
g. Create rivets for the horizontal back support.
h. Align rivets .
i. Create right side rivets.
j. Rotate the back support.
k. Create leg supports.
l. Create rivets for the seat support.
m. Create legs of the park bench.
n. Save and render the scene.



Figure 2-63 *The model of a park bench*

Creating the Project Folder

Create a new project folder with the name *c02_tut2* at *\Documents\3dsmax2015* and then save the file with the name *c02tut2*, as discussed in Tutorial 1.

Creating Horizontal Back Supports

In this section, you need to create horizontal back supports of the park bench.

1. Activate the Top viewport. Choose **Create > Geometry** in the **Command Panel**; **Standard Primitives** is displayed in the drop-down list. Next, choose the **Box** tool from the **Object Type** rollout; various rollouts are displayed in the **Command Panel**.

2. Expand the **Keyboard Entry** rollout and set the values as given below:

   Length: **1.5** Width: **124** Height: **6.03**

3. Choose the **Create** button from the **Keyboard Entry** rollout; a box is created in viewports, refer to Figure 2-64.

4. In the **Name and Color** rollout, name the box as *horizontal back support001* and press the ENTER key.

Evaluation Copy. Do not reproduce. For information visit www.cadcim.com

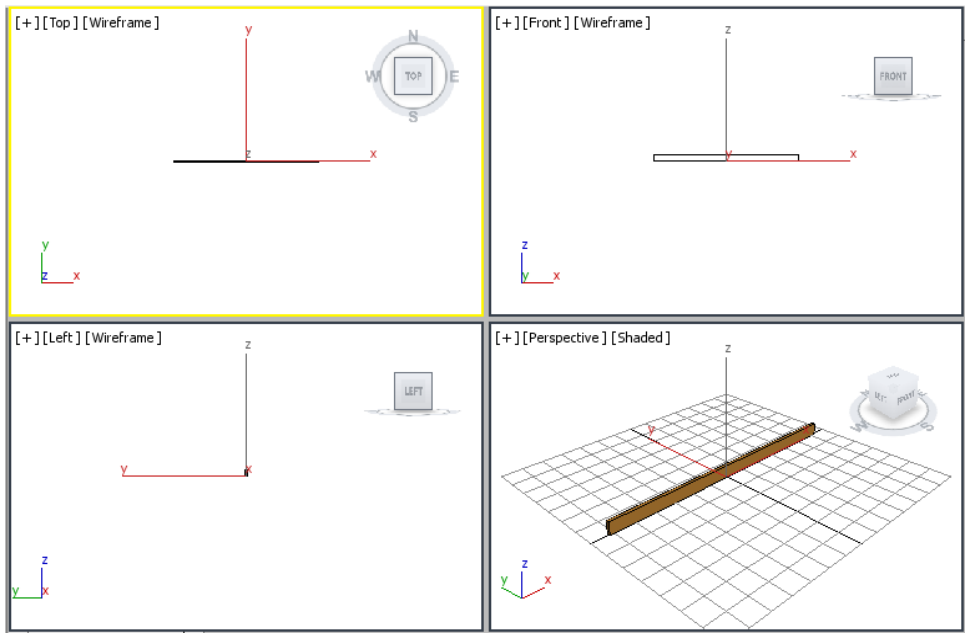

Figure 2-64 *A box created*

5. Choose the color swatch from the **Name and Color** rollout; the **Object Color** dialog box is displayed. Now, using this dialog box, modify the color of *horizontal back support001* to light brown. Choose the **OK** button to close the **Object Color** dialog box.

   Next, you need to create copies of *horizontal back support001*.

6. Activate the Front viewport. Choose the **Select and Move** tool from the **Main Toolbar** and make sure that *horizontal back support001* is selected. Next, move the cursor over the Y axis. Press and hold the SHIFT key and the left mouse button. Now, drag *horizontal back support001* upward until the value in the **Y** spinner in the Coordinate display becomes around **8.0**. Release the left mouse button and the SHIFT key; the **Clone Options** dialog box is displayed.

7. In the **Clone Options** dialog box, make sure the **Copy** radio button is selected. Set the value in the **Number of Copies** spinner to **4**. Choose the **OK** button; four boxes with the same dimensions are displayed and they are automatically named as *horizontal back support002*, *horizontal back support003*, *horizontal back support004*, and *horizontal back support005*.

8. Choose the **Zoom Extents All** tool from the viewport navigation controls; the horizontal back supports are displayed in viewports, as shown in Figure 2-65.

   Next, you need to rotate *horizontal back support005*.

9. Activate the Left viewport and select *horizontal back support005*. Next, right-click on the **Select and Rotate** tool in the **Main Toolbar**; the **Rotate Transform Type-In** dialog box is displayed.

Evaluation Copy. Do not reproduce. For information visit www.cadcim.com

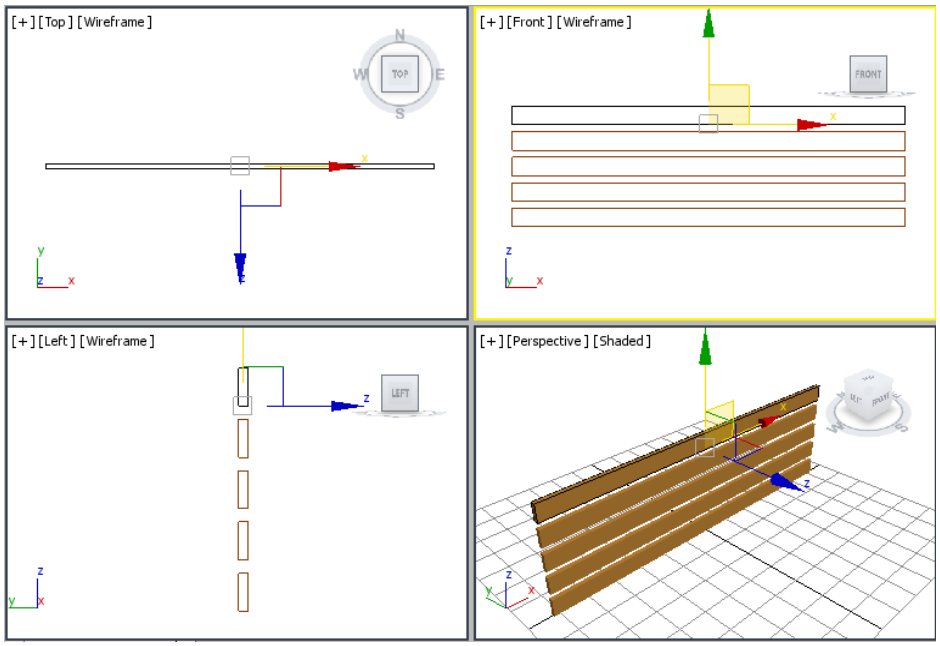

Figure 2-65 *Horizontal back supports displayed in viewports*

10. In the **Absolute:World** area, set the value **-10** in the **X** spinner, as shown in Figure 2-66 and then press the ENTER key; *horizontal back support005* gets rotated, refer to Figure 2-67. Now, close the **Rotate Transform Type-In** dialog box.

11. Click anywhere in the viewport to deselect *horizontal back support005*.

Grouping Horizontal Back Supports

In this section, you will group all horizontal seat supports.

1. Activate the Left viewport and choose the **Select Object** tool. Now, select all horizontal back supports by dragging a selection box around them, refer to Figure 2-68.

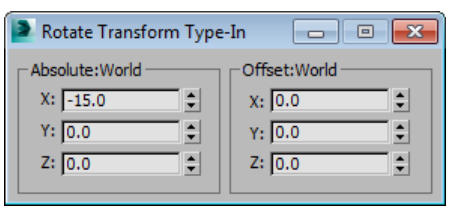

Figure 2-66 *The* ***Rotate Transform Type-In*** *dialog box*

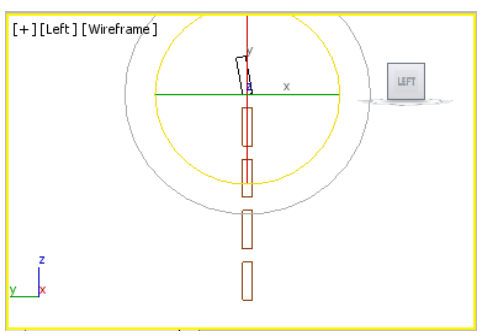

Figure 2-67 *The horizontal back support005 geometry after rotating in the Left viewport*

Evaluation Copy. Do not reproduce. For information visit www.cadcim.com

2. Choose **Group > Group** from the menu bar; the **Group** dialog box is displayed.

3. In the **Group name** text box, enter **horizontal back support**, as shown in Figure 2-69 and then choose the **OK** button; all horizontal back supports are grouped together.

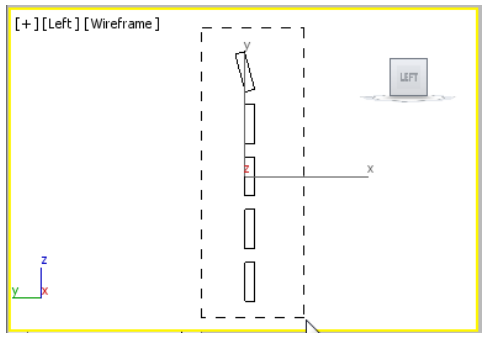

Figure 2-68 *All horizontal back supports selected simultaneously*

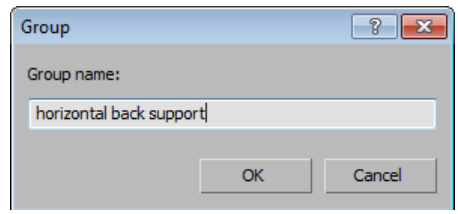

Figure 2-69 *The* ***Group*** *dialog box*

Creating Horizontal Seat Supports

In this section, you will create horizontal seat supports.

1. Activate the Top viewport and choose the **Box** tool from the **Object Type** rollout.

2. Expand the **Keyboard Entry** rollout and set the values as follows:

   Length: **6.03** Width: **124** Height: **1.5**

3. Choose the **Create** button from the **Keyboard Entry** rollout; a box is created in all viewports.

4. In the **Name and Color** rollout, name the box as *horizontal seat support001*.

5. Use the color swatch to assign the same color to *horizontal seat support001* that you assigned to *horizontal back support*.

6. Choose the **Select and Move** tool from the **Main Toolbar** and align *horizontal seat support001* with *horizontal back support* in viewports, refer to Figure 2-70.

   Next, you need to create four copies of *horizontal seat support001*.

7. Activate the Top viewport and make sure *horizontal seat support001* is selected. Next, place the cursor over the vertical axis. Press and hold the SHIFT key and drag *horizontal seat support001* downward until the value in the **Y** spinner in the Coordinate display becomes around **-7.5**. Release the left mouse button and the SHIFT key; the **Clone Options** dialog box is displayed.

8. In the **Clone Options** dialog box, make sure the **Copy** radio button is selected. Set the value in the **Number of Copies** spinner to **4** and choose the **OK** button; four boxes with

Evaluation Copy. Do not reproduce. For information visit www.cadcim.com

the same dimensions are displayed and they are automatically named as *horizontal seat support002*, *horizontal seat support003*, *horizontal seat support004*, and *horizontal seat support005*.

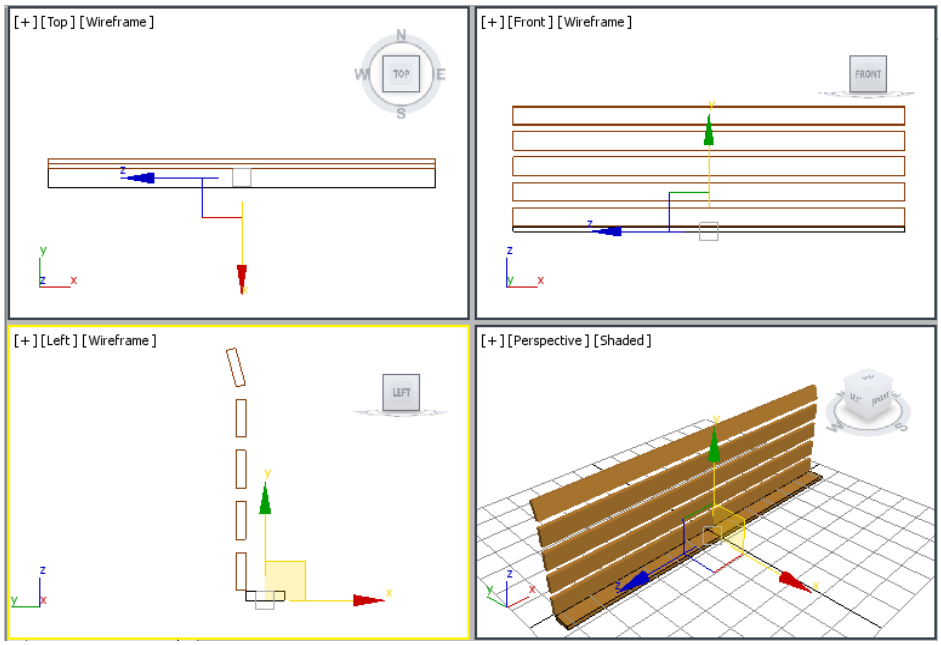

Figure 2-70 *Alignment of horizontal seat support001 in viewports*

9. Choose the **Zoom Extents All** tool; all objects are displayed in the viewports, as shown in Figure 2-71.

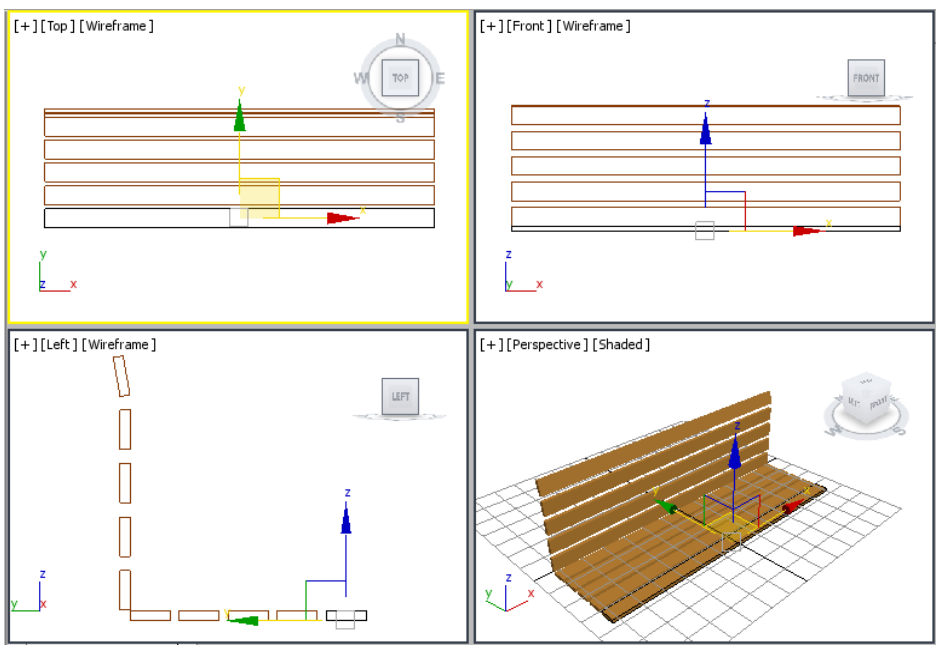

Figure 2-71 *Horizontal seat supports displayed in the viewports*

Evaluation Copy. Do not reproduce. For information visit www.cadcim.com

10. Click anywhere in the viewport to deselect the objects.

Grouping Horizontal Seat Supports

In this section, you will group all horizontal seat supports using the Scene Explorer.

1. Select all horizontal seat supports from the list displayed in the Scene Explorer using the CTRL key and then right-click; a quad menu is displayed.

2. Choose **Add Selected to > New Group** from this quad menu; the **Group** dialog box is displayed.

3. In the **Group name** text box, enter **horizontal seat support** and then choose the **OK** button.

Creating Vertical Back Supports

In this section, you will create vertical back supports of the park bench.

1. Activate the Top viewport. Choose **Create > Geometry** in the **Command Panel**; **Standard Primitives** is displayed in the drop-down list. Next, choose the **Cylinder** tool in the **Object Type** rollout.

2. In the **Keyboard Entry** rollout, set the values as follows:

X: **-60**	Y: **1.5**	Z: **0.0**
Radius: **1.0**	Height: **38.0**	

3. Now, choose the **Create** button in the **Keyboard Entry** rollout; a cylinder is created in all viewports, as shown in Figure 2-72.

4. In the **Name and Color** rollout, name the cylinder as *vertical back support001* and press the ENTER key.

5. Change the color of *vertical back support001* to black.

   Next, you need to create a copy of *vertical back support001*.

6. Activate the Front viewport by middle-clicking in it. Choose the **Select and Move** tool and move the cursor over the horizontal axis. Press and hold the SHIFT key and the left mouse button, and then drag *vertical back support001* to the right side to align it with the right side of *horizontal back support*, as shown in Figure 2-73. Release the left mouse button and the SHIFT key; the **Clone Options** dialog box is displayed.

7. In the **Clone Options** dialog box, make sure the **Copy** radio button is selected. Set the value **1** in the **Number of Copies** spinner and choose the **OK** button; *vertical back support002* is created with the same dimensions as *vertical back support001*, refer to Figure 2-73.

8. Click anywhere in the viewport to deselect the objects.

Evaluation Copy. Do not reproduce. For information visit www.cadcim.com

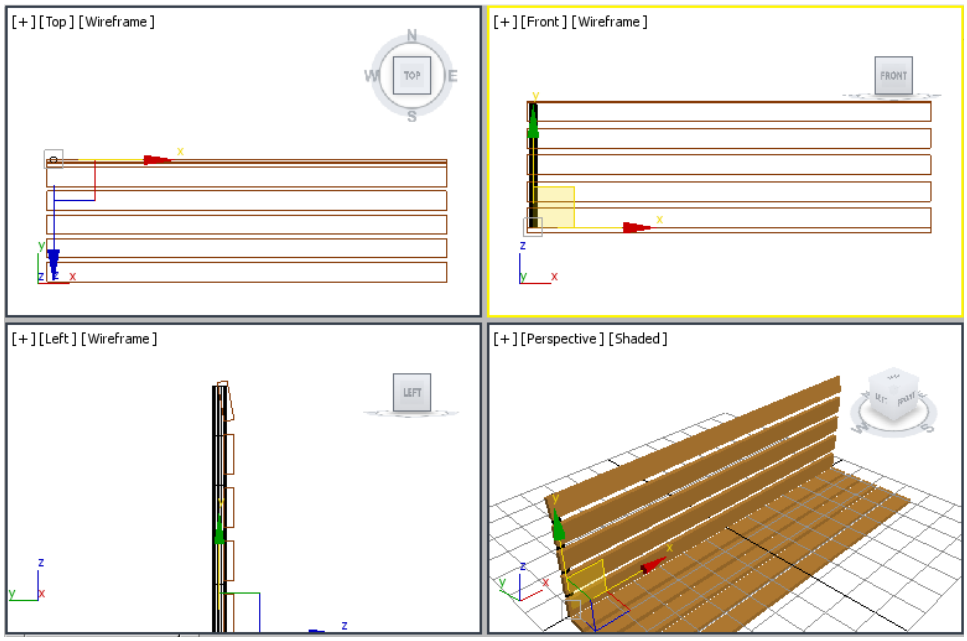

Figure 2-72 *The vertical back support001 geometry in viewports*

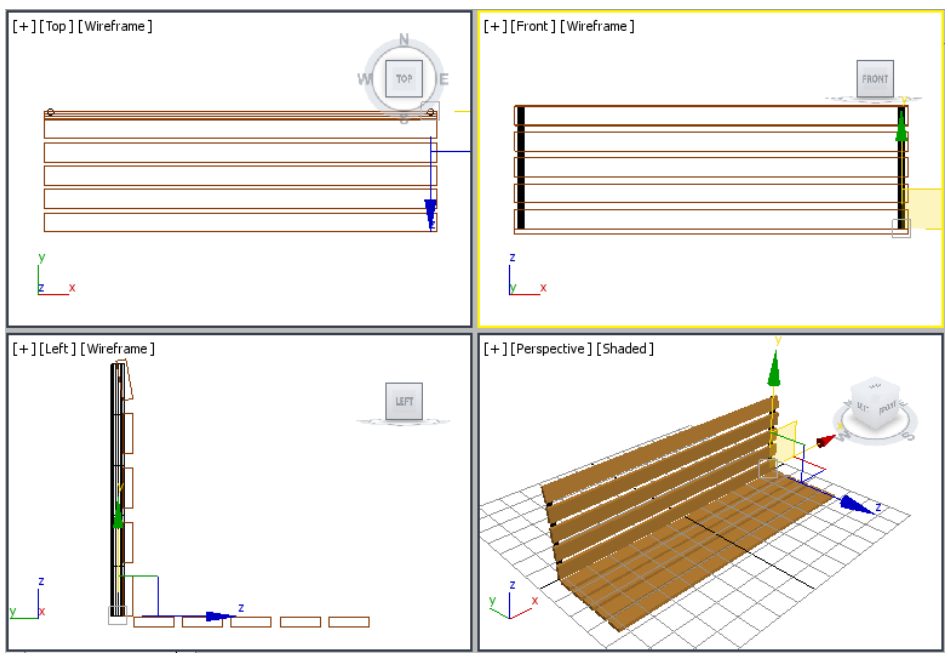

Figure 2-73 *The vertical back support002 in viewports*

Creating Rivets for Horizontal Back Support

In this section, you will create a sphere and a cylinder to create the cap and the body of rivet, respectively.

Evaluation Copy. Do not reproduce. For information visit www.cadcim.com

1. Activate the Top viewport and choose **Create > Geometry** in the **Command Panel**; **Standard Primitives** is displayed in the drop-down list. Next, choose the **Sphere** tool in the **Object Type** rollout.

2. In the **Keyboard Entry** rollout, set the value **0.8** in the **Radius** spinner and choose the **Create** button; a sphere is created.

3. In the **Parameters** rollout, make sure that the **Smooth** check box and the **Chop** radio button are selected. In the **Hemisphere** spinner, enter the value **0.5**.

4. Name the sphere as **cap** and assign black color to it.

   Next, you need to create a cylinder for the body of the rivet.

5. In the **Command Panel**, choose **Create > Geometry > Standard Primitives > Object Type** rollout **> Cylinder**.

6. In the **Keyboard Entry** rollout, set the values as follows:

   X: **0** Y: **0** Z: **0**
   Radius: **0.241** Height: **3.5**

7. Choose the **Create** button from the **Keyboard Entry** rollout; a cylinder is created.

8. Name the cylinder as **body** and assign black color to it.

9. Activate the Left viewport and select *cap* and *body* simultaneously from the Scene Explorer by holding the CTRL key; *cap* and *body* are selected in the viewports.

10. Choose the **Zoom Extents All Selected** tool to increase the magnification of the selected objects in all viewports. 

11. Next, align *cap* and *body* of the rivet in the Left viewport using the **Select and Move** tool, as shown in Figure 2-74.



Note

*You may need to use the **Zoom** and **Pan View** tools to align cap and body of the rivet.*

   Next, you need to group *body* and *cap* to create the rivet.

12. Select *cap* and *body* of the rivet in the Scene Explorer and group them as *rivet001*.

13. Choose the **Zoom Extents All** tool and move *rivet001* in the Left viewport to visualize it properly, as shown in Figure 2-75.

Evaluation Copy. Do not reproduce. For information visit www.cadcim.com

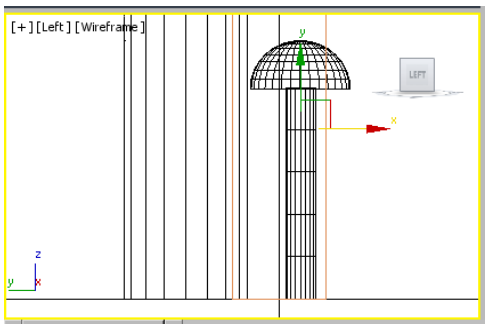

Figure 2-74 *Alignment of cap and body*

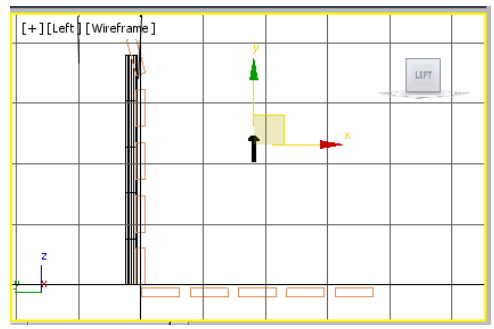

Figure 2-75 *The rivet001 group in the Left viewport*

Aligning Rivets

In this section, you will align rivets.

1. In the Left viewport, select *rivet001* and right-click on the **Select and Rotate** tool; the **Rotate Transform Type-In** dialog box is displayed. Also, a circular gizmo along with the X, Y, and Z axes is displayed.

2. In the **Offset:Screen** area of the **Rotate Transform Type-In** dialog box, enter **-90** in the **Z** spinner and press ENTER; *rivet001* gets rotated, as shown in Figure 2-76. Now, close the **Rotate Transform Type-In** dialog box.

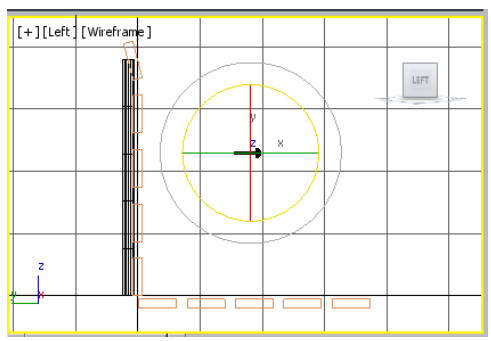

Figure 2-76 *Rotating rivet001 in the Left viewport*

3. Choose the **Select and Move** tool and align *rivet001* with *horizontal back support* in all viewports, as shown in Figure 2-77.

4. In the Left viewport, select *rivet001* using the **Select and Move** tool and move the cursor over the vertical axis. Now, create 4 copies of *rivet001*. These copies are automatically named as *rivet002*, *rivet003*, *rivet004*, and *rivet005*. Align them in the Left viewport, refer to Figure 2-78.

5. Select the uppermost rivet and choose the **Select and Rotate** tool. Now, rotate the uppermost rivet by using the outermost ring of the **Select and Rotate** tool in the counterclockwise direction until the value in the **X** spinner in the coordinate display becomes **-15**, refer to Figure 2-79. Next, align it using the **Select and Move** tool.

Evaluation Copy. Do not reproduce. For information visit www.cadcim.com

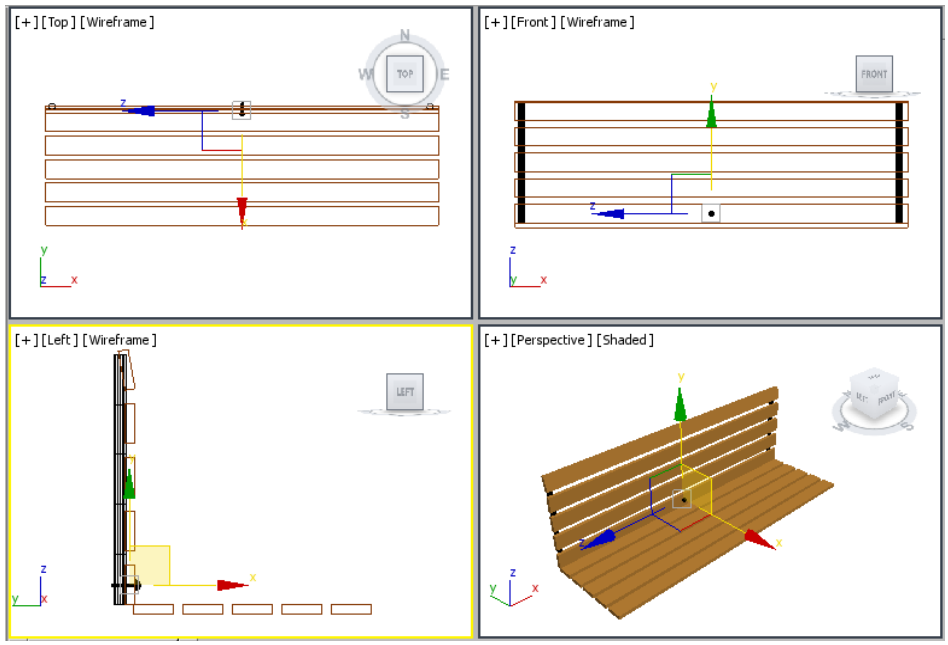

Figure 2-77 *Alignment of rivet001 with horizontal back support*

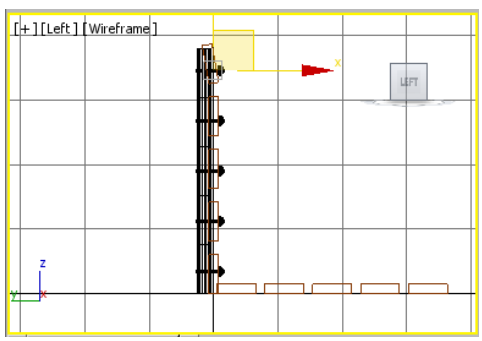

Figure 2-78 *Alignment of rivets in the Left viewport*

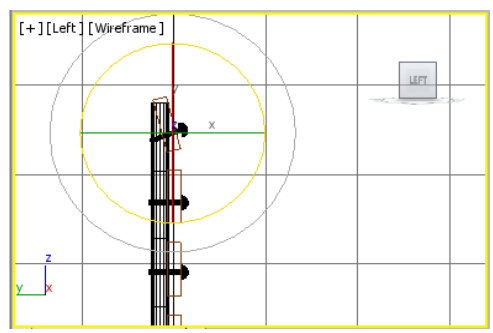

Figure 2-79 *Rotating uppermost rivet*

6. Press and hold the CTRL key and select all rivets from the Scene Explorer and group them as *left side rivets*. Click anywhere in the viewport to deselect the objects.

Note

To change the viewport without deselecting the objects, middle-click in that viewport; the objects will remain selected.

Creating Right Side Rivets

In this section, you will copy *left side rivets* for creating right side rivets.

1. Select *left side rivets* in the Front viewport using the **Select and Move** tool and move the cursor over the horizontal axis. Next, press and hold the SHIFT key and the left mouse

Evaluation Copy. Do not reproduce. For information visit www.cadcim.com

button, and then drag the mouse toward the right side. Release the left mouse button and the SHIFT key exactly over *vertical back support002* on the right side; the **Clone Options** dialog box is displayed.

2. In the **Clone Options** dialog box, make sure the **Copy** radio button is selected. In the **Name** text box, enter **right side rivets** to modify the name of the group and choose **OK**; *right side rivets* group is displayed, as shown in Figure 2-80.

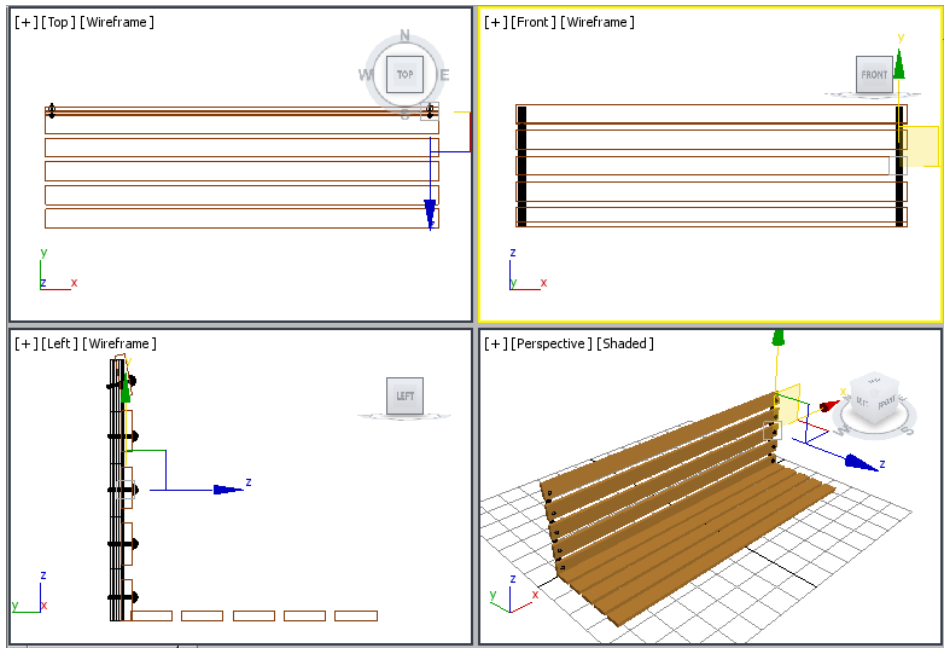

Figure 2-80 *The right side rivets group displayed in viewports*

Now, you need to select *horizontal back support*, *vertical back support001*, *vertical back support002*, *left side rivets*, and *right side rivets*.

3. Select *horizontal back support*, *vertical back support001*, *vertical back support002*, *left side rivets*, and *right side rivets* using the CTRL key from the Scene Explorer and then group them as *back support* as described earlier.

Rotating the Back Support

In this section, you will rotate the back support.

1. Select *back support* in the Left viewport and choose the **Select and Rotate** tool; a circular gizmo is displayed.

2. Move the cursor over the Z-axis, which is blue in color; the Z-axis turns yellow and becomes active. Now, press the left mouse button and drag the cursor counterclockwise to rotate the back support until the value in the **Z** spinner in the coordinate display becomes around **10**. Release the left mouse button; the *back support* group is rotated, as shown in Figure 2-81.

Evaluation Copy. Do not reproduce. For information visit www.cadcim.com

3. Choose the **Select and Move** tool and align *back support* with *horizontal seat support*, as shown in Figure 2-82.

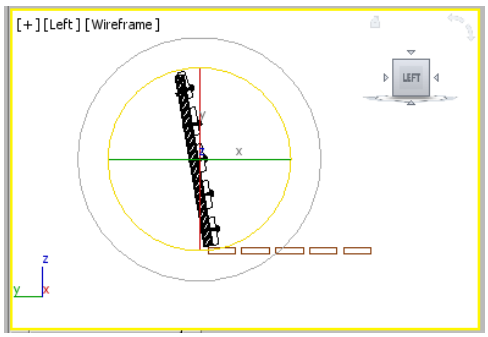

Figure 2-81 *Rotating back support in the Left viewport*

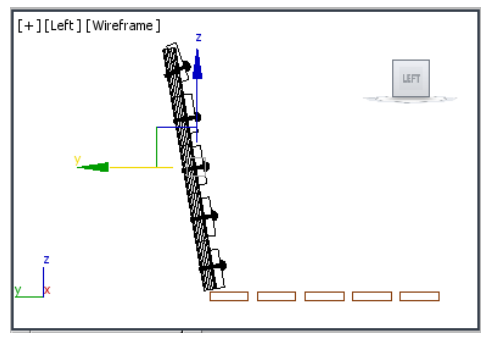

Figure 2-82 *Alignment of back support in the Left viewport*

Creating Leg Supports

Now, you will create leg support.

1. Activate the Top viewport and choose **Create > Geometry** in the **Command Panel**; the **Standard Primitives** is displayed in the drop-down list. Next, choose the **Box** tool in the **Object Type** rollout.

2. In the **Keyboard Entry** rollout, set the parameters as follows:

   Length: **36.677** Width: **9.0** Height: **2.8**

3. Choose the **Create** button from the **Keyboard Entry** rollout; the box is created.

4. Name the box as *leg support001* and change its color to black.

5. Choose the **Select and Move** tool and align *leg support001* to the extreme left and below *horizontal seat support* in all viewports, refer to Figure 2-83.

   Next, you need to copy *leg support001* to create the leg support on the right side of *horizontal seat support*.

6. Activate the Top viewport by middle-clicking in it and create a copy of *leg support001* as described earlier. It is automatically named as *leg support002*.

7. Choose the **Select and Move** tool and align *leg support002* to *horizontal seat support* in all viewports, as shown in Figure 2-84.

   Next, you need to create another box for other leg supports.

Evaluation Copy. Do not reproduce. For information visit www.cadcim.com

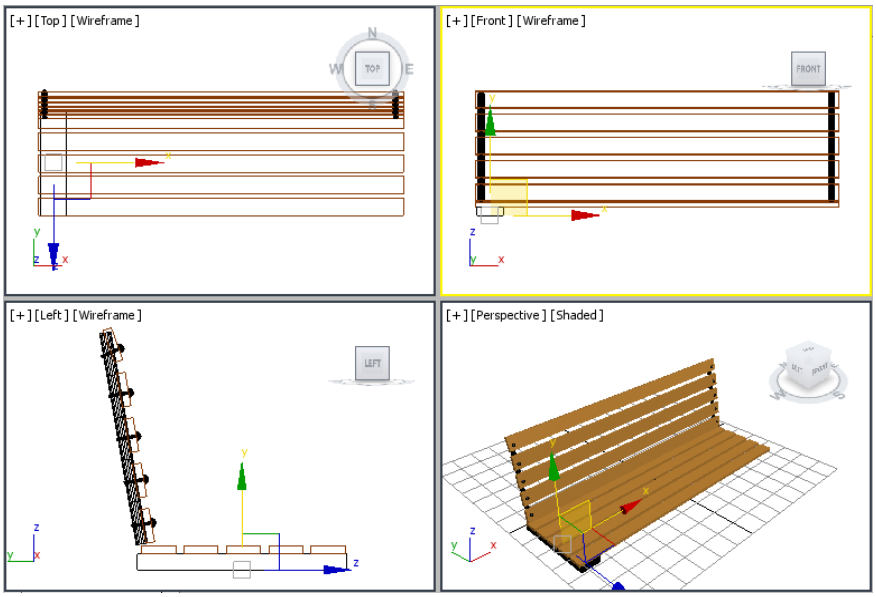

Figure 2-83 *Alignment of leg support001 with horizontal seat support*

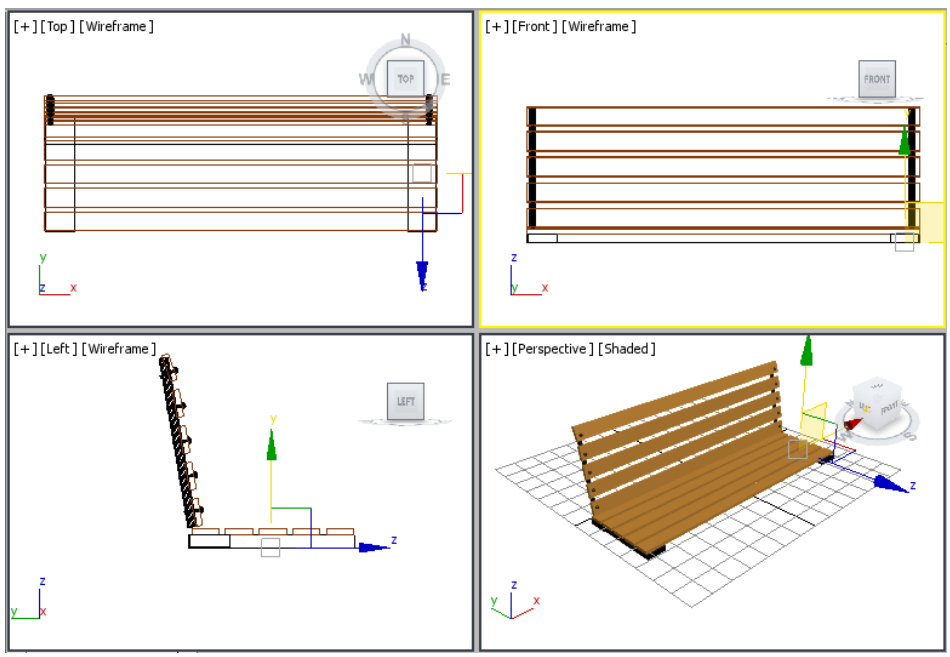

Figure 2-84 *Alignment of leg support002 with horizontal seat support*

8. Activate the Top viewport and create a box using the values as follows:

Length: **9.0** Width: **124** Height: **2.8**

Evaluation Copy. Do not reproduce. For information visit www.cadcim.com

9. In the **Name and Color** rollout, name the box as *leg support003* and change its color to black.

10. Choose the **Select and Move** tool and align *leg support003* with *horizontal seat support* in all viewports, as shown in Figure 2-85.

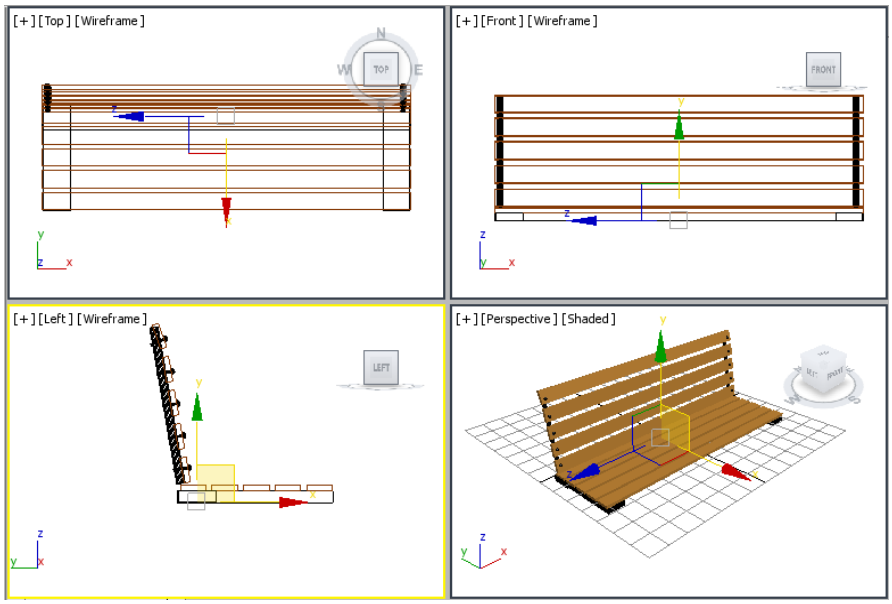

Figure 2-85 *Alignment of leg support003 with horizontal seat support in viewports*

Note

You need to use the ***Arc Rotate*** *tool to view leg support003 properly in the Perspective viewport.*

11. Create a copy of *leg support003* in the Top viewport; it is automatically named as *leg support004*.

12. Choose the **Select and Move** tool and align *leg support004* with *horizontal seat support* in all viewports, refer to Figure 2-86.

Creating Rivets for the Seat Support

To create the rivets for *horizontal seat support*, you need to copy *right side rivets*. As you already know that *right side rivets* are grouped under *back support,* therefore first you need to open this group to access them independently. After opening, *back support* group will be ungrouped temporarily and you can transform the objects within it independently.

1. Activate the Left viewport and select *back support*.

Evaluation Copy. Do not reproduce. For information visit www.cadcim.com

2. Choose **Group > Open** from the menu bar; *back support* is now ungrouped temporarily. Also, a pink colored bounding box is displayed around *back support*.

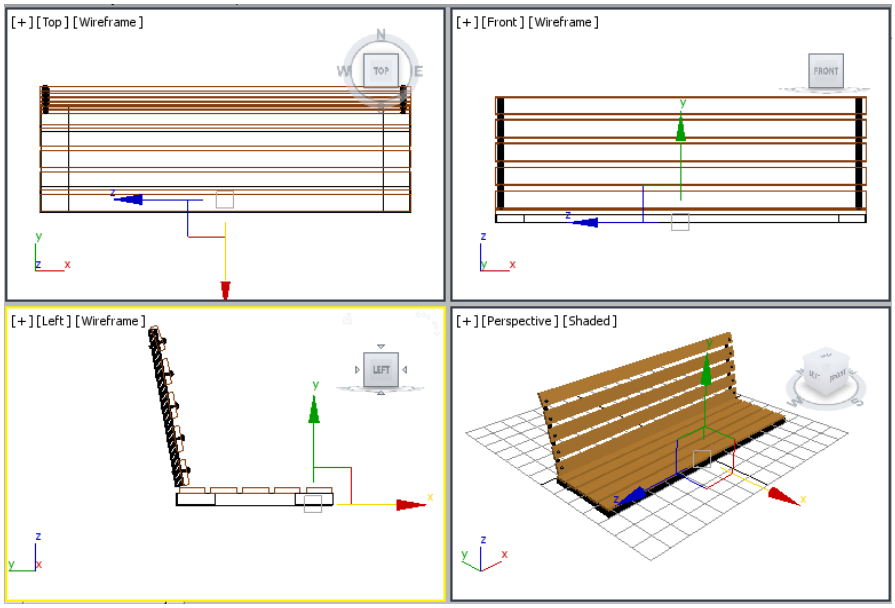

Figure 2-86 *Alignment of leg support004 in viewports*

3. Choose the **Select By Name** tool; the **Select From Scene** dialog box is displayed.

4. In the **Select From Scene** dialog box, select *right side rivets* and choose the **OK** button, refer to Figure 2-87.

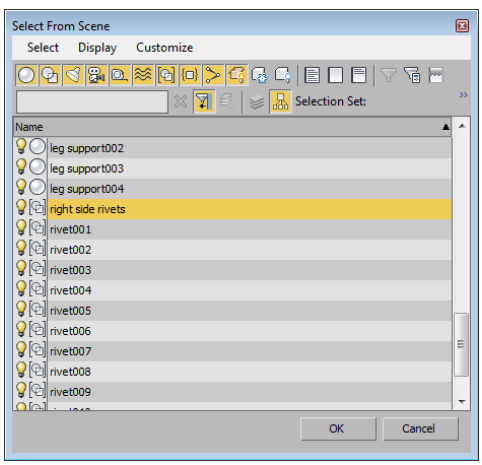

Figure 2-87 *The **right side rivets** group selected in the **Select From Scene** dialog box*

Evaluation Copy. Do not reproduce. For information visit www.cadcim.com

5. Make sure *right side rivets* group is still selected. Now, create a copy of *right side rivets* and name it as *right side seat rivets*, as shown in Figure 2-88.

6. Make sure that *right side seat rivets* group is selected and choose **Group > Detach** from the menu bar; *right side seat rivets* group is detached from *back support* group.

7. Select the pink colored gizmo of *back support* group and choose **Group > Close** from the menu bar to group them again.

   Next, you need to align *right side seat rivets* group.

8. Choose the **Select and Rotate** tool and select *right side seat rivets* in the Left viewport. Then, move the cursor over the Z-axis. Now, press the left mouse button and drag the cursor in the counterclockwise direction to rotate *right side seat rivets* until the angle of rotation in the **Z** spinner becomes **80**, refer to Figure 2-89.

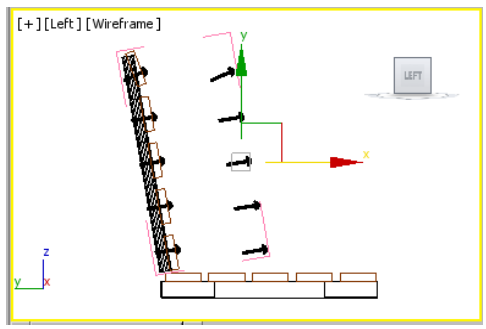

Figure 2-88 *The right side seat rivets group in the Left viewport*

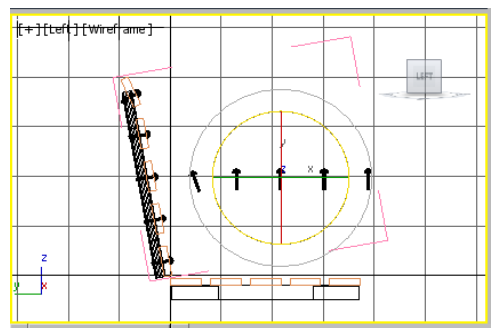

Figure 2-89 *Rotating the right side seat rivets group in the Left viewport*

9. Choose the **Select and Move** tool. Now, move the cursor over the vertical axis and then drag the mouse downward to align *right side seat rivets* with *horizontal seat support*, as shown in Figure 2-90.

   Next, you need to align the rivet (which is near the horizontal back support) to the horizontal seat support.

10. Make sure *right side seat rivets* group is selected and choose **Group > Open** from the menu bar to ungroup them temporarily.

11. Select the rivet which is near *horizontal back support* and choose the **Select and Rotate** tool. Move the cursor over the Z-axis. Now, press the left mouse button and drag the cursor in the clockwise direction to rotate it until the angle of rotation in the **Z** spinner in the coordinate display becomes around **-15**, refer to Figure 2-91.

Evaluation Copy. Do not reproduce. For information visit www.cadcim.com

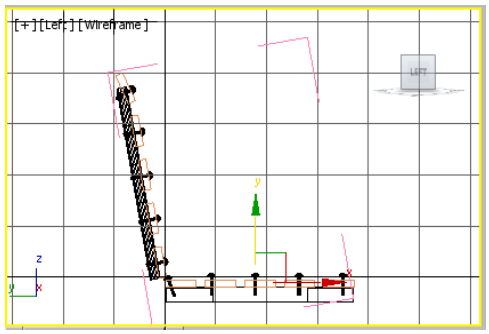

Figure 2-90 *Alignment of right side seat rivets in the Left viewport*

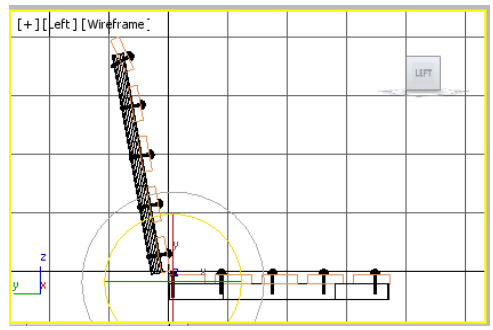

Figure 2-91 *Rotating rivet in the Left viewport*

12. Choose the **Select and Move** tool and align all rivets of *right side seat rivets* group with *horizontal seat support*, as shown in Figure 2-92.

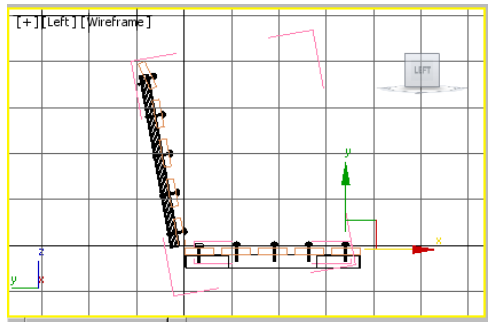

Figure 2-92 *Alignment of right side seat rivets in the Left viewport*

13. Make sure that one of the rivets of *right side seat rivets* group is selected and choose **Group > Close** from the menu bar to group them again.

    Next, you need to copy *right side seat rivets* to create rivets on the left side of *horizontal seat support*.

14. Activate the Top viewport and create a copy of *right side seat rivets*. Name the new group as *left side seat rivets*.

15. Align *left side seat rivets* using the **Select and Move** tool in viewports, as shown in Figure 2-93.

Creating Legs of the Park Bench

In this section, you will create legs of the park bench.

1. Activate the Top viewport and choose **Create > Geometry** in the **Command Panel**; **Standard Primitives** is displayed in the drop-down list. Next, choose the **Box** tool in the **Object Type** rollout.

Evaluation Copy. Do not reproduce. For information visit www.cadcim.com

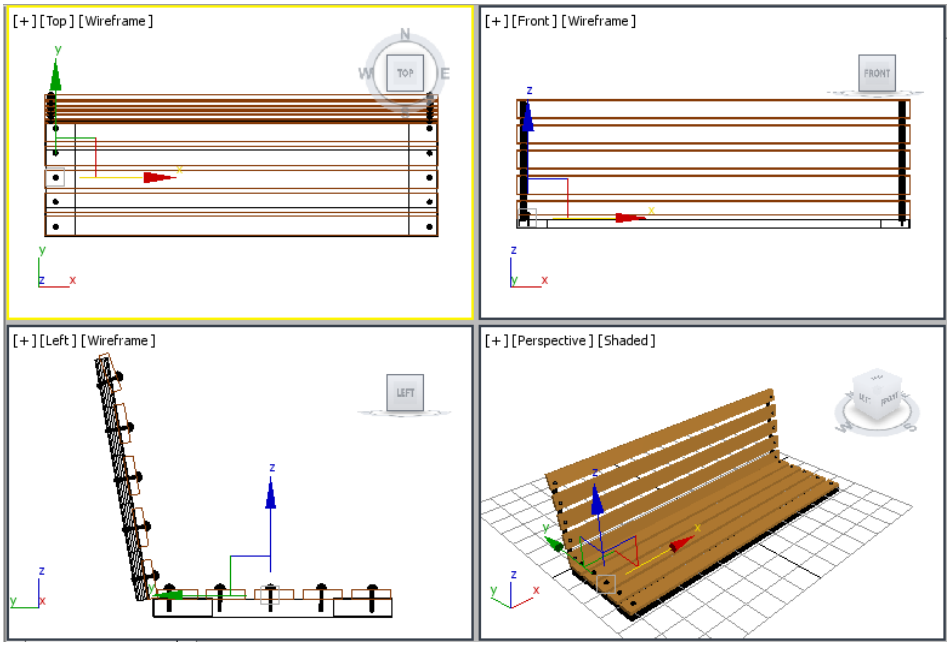

Figure 2-93 *Alignment of left side seat rivets in viewports*

2. In the **Keyboard Entry** rollout, set the values as follows:

   Length: **4.0** Width: **3.0** Height: **26.88**

3. Choose the **Create** button from the **Keyboard Entry** rollout; a box is created.

4. In the **Name and Color** rollout, name the box as *leg001*. Also, change its color to black.

5. Choose the **Select and Move** tool and align *leg001* with *leg support001* in viewports, refer to Figure 2-94. You need to adjust the viewport to display all objects properly using the **Zoom** and **Pan View** tools.

6. Create three copies of *leg001* to create three more legs. These are automatically named as *leg002*, *leg003*, and *leg004*.

7. Choose the **Select and Move** tool and align *leg002*, *leg003*, and *leg004* in all viewports, as shown in Figure 2-95.

8. Choose the **Zoom Extents All** tool and modify the view in the Perspective viewport using the **Orbit** tool.

Evaluation Copy. Do not reproduce. For information visit www.cadcim.com

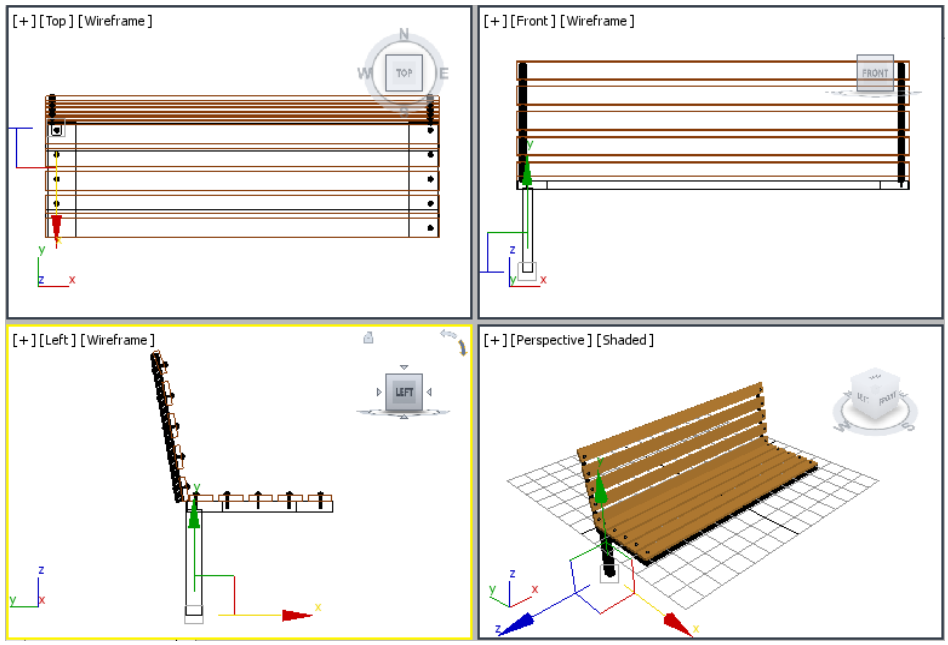

Figure 2-94 *Alignment of leg001 in viewports*

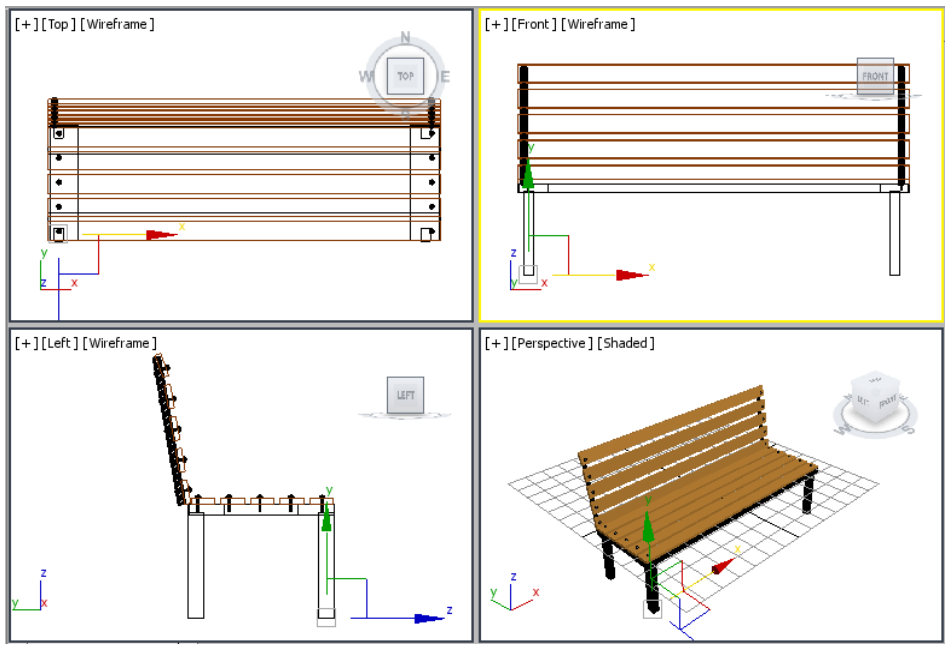

Figure 2-95 *Alignment of legs in viewports*

Evaluation Copy. Do not reproduce. For information visit www.cadcim.com

Saving and Rendering the Scene

In this section, you will save and render the scene. You can also view the final rendered image of this scene by downloading the *c02_3dsmax_2015_rndr.zip* file from *www.cadcim.com*. The path of the file is as follows: *Textbooks > Animation and Visual Effects > 3ds Max > Autodesk 3ds Max 2015: A Comprehensive Guide*

1. Change the background color of the scene to white as discussed in Tutorial 1.

2. Choose **Save** from the **Application** menu.

3. Activate the Perspective viewport. Next, choose the **Render Production** tool from the **Main Toolbar**; the **Rendered Frame** window is displayed. This window shows the final output of the scene, refer to Figure 2-96.



Figure 2-96 *The final output after rendering*

Self-Evaluation Test

Answer the following questions and then compare them to those given at the end of this chapter:

1. Which of the following tools is used to rotate an object in the active viewport?

(a) **Zoom Extents All** (b) **Orbit**
(c) **Pan** (d) All of these

Evaluation Copy. Do not reproduce. For information visit www.cadcim.com

2. Which of the following tools is used to select an object by its name from the list of objects that are currently present in the scene?

(a) **Select Object** (b) **Select and Move**
(c) **Select by Name** (d) **Select and Rotate**

3. Which of the following rollouts is available when you choose the **Box** tool?

(a) **Name and Color** (b) **Creation Method**
(c) **Parameters** (d) All of these

4. Which of the following objects is not a standard primitive?

(a) Pyramid (b) Geosphere
(c) Torus Knot (d) Torus

5. On starting 3ds Max, a screen with three viewports will be displayed. (T/F)

6. You can create any standard primitive dynamically as well as by entering the parameters in the **Keyboard Entry** rollout. (T/F)

7. The options in the **Creation Method** rollout are used only when you create an object using the keyboard. (T/F)

8. To stretch and squash an object, you need to choose the _____ tool from the **Main Toolbar**.

9. You can use the _____ rollout to change the name and color of an object.

10. You can use the _____ rollout to modify the dimensions of an object.

11. The _____ tool is used to move through the viewport.

Review Questions

Answer the following questions:

1. Which of the following tools is used to display all objects in all viewports?

(a) **Zoom** (b) **Pan**
(c) **Zoom Extents All** (d) **Orbit**

Evaluation Copy. Do not reproduce. For information visit www.cadcim.com

2. Which of the following tools is used to move an object along the X, Y, or Z axis?

   (a) **Select Object** (b) **Select and Move**
   (c) **Select by Name** (d) All of these

3. While creating the clone of an object, you need to hold the CTRL key and drag the object. (T/F)

4. To change the background color of a scene, you need to choose **Rendering > Environment** from the menu bar. (T/F)

5. A geosphere is smoother than a sphere and has more regular surfaces. (T/F)

6. The **Zoom Region** tool is used to adjust the view of all objects in all viewports to display them properly. (T/F)

7. You need to choose the **Render Production** tool from the **Main Toolbar,** to render a view without using the **Render Setup** dialog box. (T/F)

8. You can use different parts of the teapot individually to make a new object. (T/F)

9. You can choose **Reset** from the **Application** menu to reset all settings of 3ds Max. (T/F)

10. You need to choose the _____ tool and press and hold the _____ key, to select more than one object simultaneously in a viewport.

EXERCISES

The rendered output of the models used in the following exercises can be accessed by downloading the *c02_3dsmax_2015_exr.zip* from *www.cadcim.com*. The path of the file is as follows: *Textbooks > Animation and Visual Effects > 3ds Max > Autodesk 3ds Max 2015: A Comprehensive Guide*

Exercise 1

Start Autodesk 3ds Max 2015 and then perform the following operations:

1. Choose **Create > Geometry** in the **Command Panel**; **Standard Primitives** will be displayed in the drop-down list. Now, choose different tools in the **Object Type** rollout and create the objects in the viewport dynamically or by entering the values in the **Keyboard Entry** rollout and notice the difference.

2. Create the objects dynamically using the options in the **Creation Method** rollout and notice the difference.

Evaluation Copy. Do not reproduce. For information visit www.cadcim.com

3. Change the name and color of the objects using the **Name and Color** rollout.

4. Modify the dimensions of the object using the **Parameters** rollout in the **Modify** tab.

5. Add more than one object to the scene and use different navigation controls to view their effects.

6. Select two or more object simultaneously by holding the CTRL key.

7. Use various tools in the **Main Toolbar** to modify the scene by moving, rotating, and scaling the objects.

8. Create a copy of any object.

9. Render the image to display its output and try to change the color of the background.

10. Reset Autodesk 3ds Max without saving the file.

Exercise 2

Create the model shown in Figure 2-97 using your own dimensions.

(Expected time: 15 min)



Figure 2-97 *The model to be created in Exercise 2*

Evaluation Copy. Do not reproduce. For information visit www.cadcim.com

Exercise 3

Create the nut model shown in Figures 2-98 and 2-99 using your own dimensions.

(Expected time: 15 min)

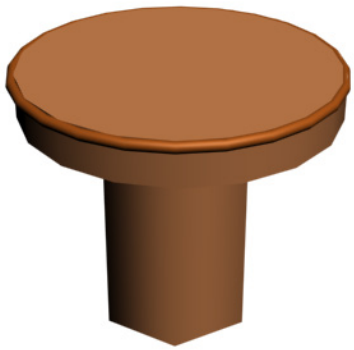

Figure 2-98 *The model of a nut (view 1)*



Figure 2-99 *The model of a nut (view 2)*

Exercise 4

Create the model of a table shown in Figure 2-100 using your own dimensions.

(Expected time: 15 min)



Figure 2-100 *The model of a table*

Evaluation Copy. Do not reproduce. For information visit www.cadcim.com

Answers to Self-Evaluation Test

1. b, **2.** c, **3.** d, **4.** c, **5.** F, **6.** T, **7.** F, **8. Select and Squash, 9. Name and Color, 10. Parameters, 11. Walk Through**

Evaluation Copy. Do not reproduce. For information visit www.cadcim.com