Chapter 3

Adding Constraints and Dimensions to Sketches

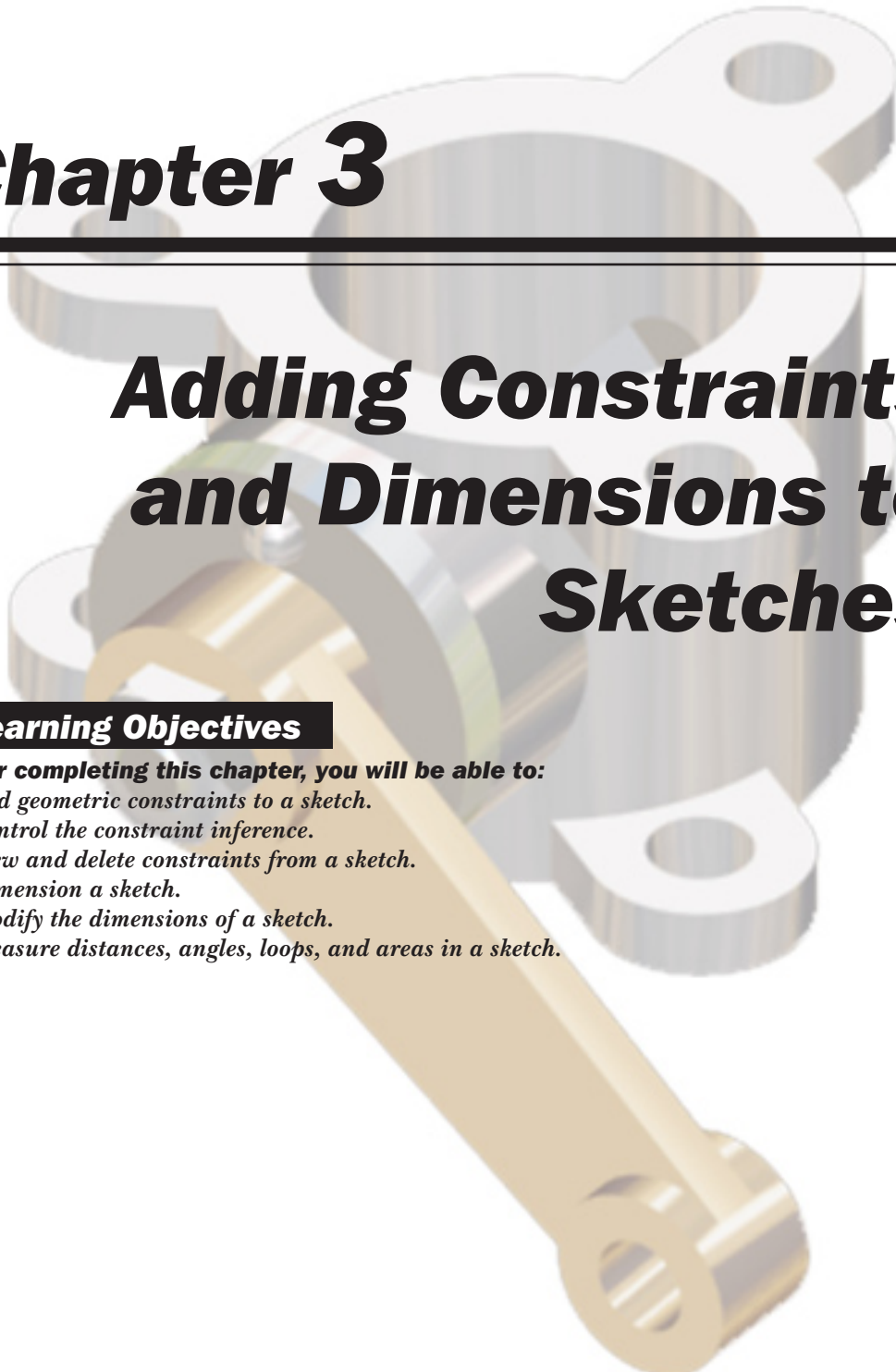

Learning Objectives

After completing this chapter, you will be able to:

- *Add geometric constraints to a sketch.*
- *Control the constraint inference.*
- *View and delete constraints from a sketch.*
- *Dimension a sketch.*
- *Modify the dimensions of a sketch.*
- *Measure distances, angles, loops, and areas in a sketch.*

ADDING GEOMETRIC CONSTRAINTS TO A SKETCH

Constraints are applied to the sketched entities to define their size and position with respect to other elements. Also, they are useful for capturing the design intent. As mentioned in Chapter 1, there are twelve types of geometric constraints that can be applied to the sketched entities. These constraints restrict their degrees of freedom and make them stable. Most of these constraints get automatically applied to the entities while drawing. However, sometimes you may need to apply some additional constraints to the sketched entities. These constraints are discussed next.

Perpendicular Constraint

Ribbon: Sketch > Constrain > Perpendicular Constraint



The Perpendicular Constraint forces the selected entity to become perpendicular to the specified entity. The entities to which the constraints can be applied are lines and ellipse axes. To apply this constraint, choose the **Perpendicular Constraint** tool from the **Constrain** panel of the **Sketch** tab; you will be prompted to select the first line or an ellipse axis. After selecting the first entity, you will be prompted to select the second line or ellipse axis. On selecting the second entity, the selected entities will become perpendicular. Figure 3-1 shows two lines before and after adding this constraint. In Autodesk Inventor 2015, you can also apply the **Perpendicular Constraint** between two arcs.

Parallel Constraint

Ribbon: Sketch > Constrain > Parallel Constraint



The Parallel Constraint forces the selected entity to become parallel to the specified entity. The entities to which this constraint can be applied are lines and ellipse axes. To apply this constraint, choose the **Parallel Constraint** tool from the **Constrain** panel of the **Sketch** tab; you will be prompted to select the first line or an ellipse axis. After you select an entity, you will be prompted to select the second line or an ellipse axis. On selecting the second entity, the two entities will become parallel. Figure 3-2 shows two lines before and after adding this constraint.

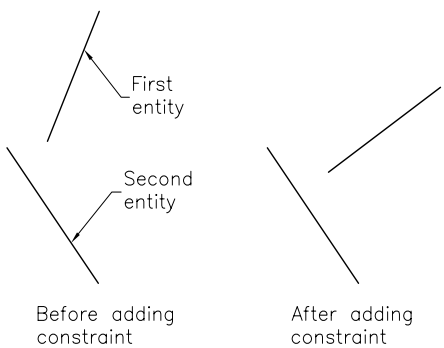

Figure 3-1 *Lines before and after applying the Perpendicular Constraint*

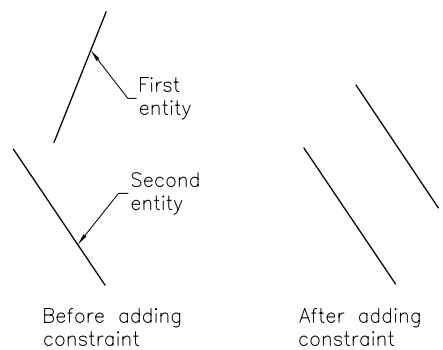

Figure 3-2 *Applying the Parallel Constraint*

Evaluation Copy. Do not reproduce. For information visit www.cadcim.com

Tangent Constraint

Ribbon: Sketch > Constrain > Tangent



The Tangent Constraint forces the selected line segment or curve to become tangent to another curve. To apply this constraint, choose the **Tangent** tool from the **Constrain** panel of the **Sketch** tab; you will be prompted to select the first curve. After you select the first curve, you will be prompted to select the second curve. The curves that can be selected are lines, circles, ellipses, or arcs. Figures 3-3 and 3-4 show the **Tangent** constraint applied between a line and a circle, and between an ellipse and arc, respectively.

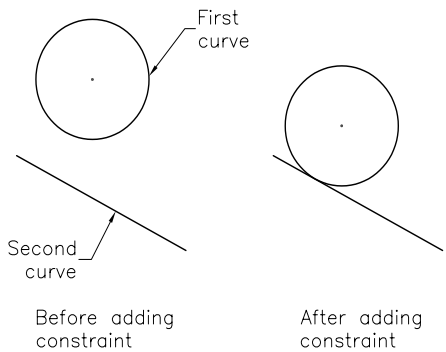

Figure 3-3 *Applying the Tangent Constraint between line and circle*

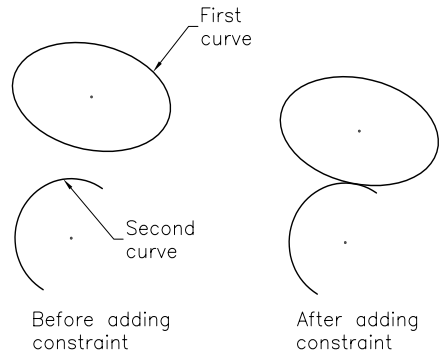

Figure 3-4 *Applying the Tangent Constraint between ellipse and arc*

Coincident Constraint

Ribbon: Sketch > Constrain > Coincident Constraint



The Coincident Constraint forces two points or a point and a curve to become coincident. To apply this constraint, choose the **Coincident Constraint** tool from the **Constrain** panel of the **Sketch** tab; you will be prompted to select the first curve or point. After you select the first curve or point, you will be prompted to specify the second curve or point. Note that either the first or the second entity selected should be a point. The points include sketch points, endpoints of a line or an arc, or center points of circles, arcs, or ellipses.

Concentric Constraint

Ribbon: Sketch > Constrain > Concentric Constraint



The Concentric Constraint forces two curves to share the same location of center points. The curves that can be made concentric include arcs, circles, and ellipses. When you invoke this constraint, you will be prompted to select the first arc, circle, or ellipse. After making the first selection, you will be prompted to select the second arc, circle, or ellipse. Select the second entity to be made concentric with the first entity.

Evaluation Copy. Do not reproduce. For information visit www.cadcim.com



Note

*If you apply a constraint that over-constrains a sketch, the **Autodesk Inventor Professional - Create Constraint** message box will be displayed informing that adding this constraint will over-constrain the sketch, refer to Figure 3-5. A sketch is said to be over-constrained if the number of dimensions or constraints in it exceeds the number that can be applied to the sketch.*

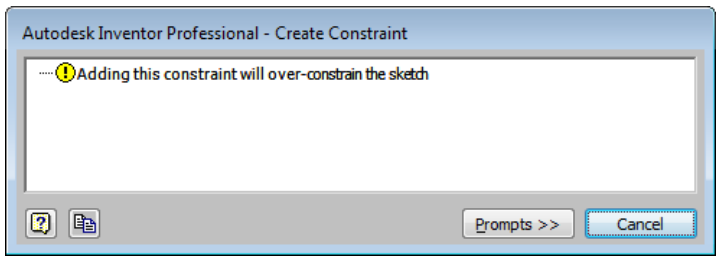

***Figure 3-5** The **Autodesk Inventor Professional - Create Constraint** message box*

Collinear Constraint

Ribbon: Sketch > Constrain > Collinear Constraint



The Collinear Constraint forces the selected line segments or ellipse axes to be placed in the same line. When you invoke this constraint, you will be prompted to select the first line or ellipse axis. After making the first selection, you will be prompted to select the second line or ellipse axis. Select the entity to be made collinear with the first entity.



Tip. *To select an ellipse axis, move the cursor close to the ellipse. The minor or the major axis, whichever the cursor is close to, will get highlighted. When the required axis is highlighted, select it using the left mouse button.*

Horizontal Constraint

Ribbon: Sketch > Constrain > Horizontal Constraint



The Horizontal Constraint forces the selected line segment, ellipse axis, or two points to become horizontal, irrespective of their original orientation. When you invoke this constraint, you will be prompted to select a line, an ellipse axis, or the first point. If you select a line or an ellipse axis, it will become horizontal. If you select a point, you will be prompted to select the second point. The points, in this case, can also include the center points of arcs, circles, or ellipses.

Evaluation Copy. Do not reproduce. For information visit www.cadcim.com

Vertical Constraint

Ribbon: Sketch > Constrain > Vertical Constraint



The **Vertical Constraint** is similar to the **Horizontal Constraint**, with the difference that this constraint forces the selected entities to become vertical.



Tip. *You can use the Horizontal or Vertical constraint to line up arcs, circles, or ellipses in the same horizontal or vertical direction by selecting their center points.*

Equal Constraint

Ribbon: Sketch > Constrain > Equal



The Equal Constraint can be used for line segments or curves. If you select two line segments, this constraint will force the length of one of the selected line segments to become equal to the length of the other selected line segment. In case of curves, this constraint will force the radius of one of the selected curves to become equal to that of the other selected curve. Note that if the first selection is a line, the second selection also has to be a line. Similarly, if the first selection is a curve, the second selection also has to be a curve.

Fix Constraint

Ribbon: Sketch > Constrain > Fix



This constraint is used to fix the orientation or location of the selected curve or point with respect to the coordinate system of the current drawing. If you apply this constraint to a line or an arc, you cannot move them from their current locations. However, you can change their length by selecting one of their endpoints and then dragging it. If you apply this constraint to a circle or an ellipse, you cannot edit either of these entities by dragging. Once you apply this constraint to an entity, its color changed.

Symmetric Constraint

Ribbon: Sketch > Constrain > Symmetric



This constraint is used to force two selected sketched entities to become symmetrical about a single sketched line segment. On invoking this constraint, you will be prompted to select the first sketched element. Note that you can select only one entity at a time to apply this constraint. Once you have selected the first sketched entity, you will be prompted to select the second sketched element. Select the second sketched entity; you will be prompted to select the symmetry axis. Select the symmetry axis (an axis about which the selected entities need to be symmetric); the second selected entity will become symmetric to the first entity. After you have applied this constraint to one set of entities, you will again be prompted to select the first and second sketched entities. However, this time you will not be prompted

Evaluation Copy. Do not reproduce. For information visit www.cadcim.com

to select the line of symmetry. The last line of symmetry will be automatically selected to add this constraint. Similarly, you can apply this constraint to other entities.

If the line of symmetry is different for applying the symmetric constraint to different entities in the sketch, you will have to restart the process of applying this constraint by right-clicking and then choosing the **Restart** option from the Marking Menu. This is because the first symmetry line is used to apply this constraint to all the sets of entities you select. However, if you restart applying this constraint, you will be prompted to select the line of symmetry again.

Smooth Constraint

Ribbon: Sketch > Constrain > Smooth (G2)



This constraint is used to apply curvature continuity between a spline and an entity connected to it. The entities that can be selected to apply this constraint include a line, arc, or another spline. Note that these entities should be connected to the spline.



Note

In Autodesk Inventor, you can apply the Perpendicular, Tangent, and Smooth (G2) constraints between different type of splines.

VIEWING THE CONSTRAINTS APPLIED TO A SKETCHED ENTITY

Ribbon: Sketch > Constrain > Show Constraints



You can view all the constraints that are applied to the entities of a sketch by choosing the **Show Constraints** tool from the **Constrain** panel. When you invoke this tool and move the cursor close to a sketched entity, it will be highlighted and constraints will be displayed after a pause. These constraints show the symbols of all the constraints that are applied to the entity. Figure 3-6 shows the constraints applied to the lines. You can move a constraint by selecting and dragging it. In the case of Coincident Constraint, the constraint applied on a point is highlighted in yellow. To view symbols, move the cursor over the highlighted yellow point; the color of the point will change, refer to Figure 3-6.

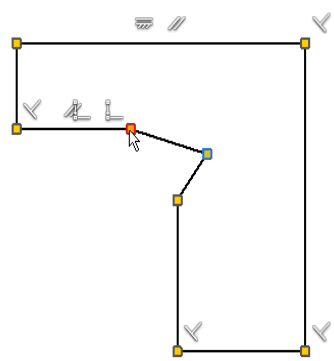

Figure 3-6 *Constraints applied to the sketch entities*

If you move the cursor close to a constraint, it will be highlighted and the entities to which the constraint is applied is also highlighted. For example, if you take the cursor close to a perpendicular constraint, the vertical line will also be highlighted along with the horizontal line, suggesting that the two lines are perpendicular to other.

Evaluation Copy. Do not reproduce. For information visit www.cadcim.com



Tip. *You can display all the constraints, applied to the entities. To do so, choose the* ***Show All Constraints*** *button from the bottom of the graphics window; separate symbols will be displayed showing the constraints on all entities. Similarly, to hide all constraints, choose the* ***Hide All Constraints*** *button from the bottom of the graphics window.*

CONTROLLING CONSTRAINTS AND APPLYING THEM AUTOMATICALLY WHILE SKETCHING

Ribbon: Sketch > Constrain > Constraint Settings



You can control and select the constraints that need to be applied automatically as well as, select the geometry to which they will be applied. You can do so by using the **Constraints Setting** dialog box. To invoke this dialog box, choose the **Constraints Settings** tool from the **Constrain** panel of the **Sketch** tab. This dialog box discussed next.

Constraints Settings Dialog box



While drawing the sketches, by default all the possible constraints get automatically applied to the sketching entities. However, you can also specify the constraints that need to be applied automatically and the geometry to which they will be applied while sketching. To do so, choose the **Constraint Settings** tool from the **Constrain** panel of the **Sketch** tab; the **Constraint Settings** dialog box will be displayed, as shown in Figure 3-7. The options in this dialog box are discussed next.

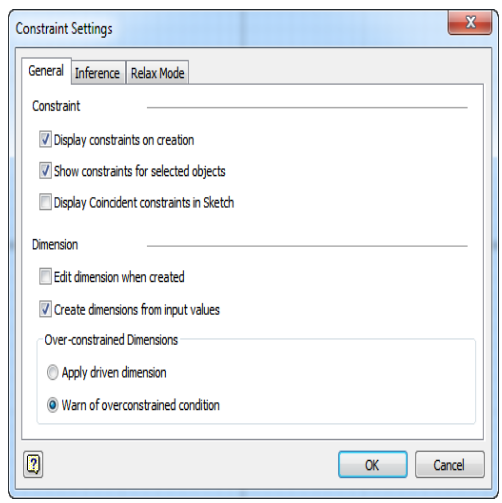

Figure 3-7 *The* ***Constraint Settings*** *dialog box*

General

The **General** tab is selected by default. The options in this tab are discussed next.

Evaluation Copy. Do not reproduce. For information visit www.cadcim.com

Evaluation Copy. Do not reproduce. For information visit www.cadcim.com

Constraints

In this area, three check boxes are available. If you select the **Display constraints on creation** check box, Autodesk Inventor 2015 allows you to display the constraints applied during the creation of sketch. If you select the **Show constraints for selected objects** check box, Autodesk Inventor 2015 allows you to show the constraints for the selected object. If you select the **Display coincident constraints in sketch** check box, Autodesk Inventor 2015 allows you to display the coincident constraints in the sketch.

Dimension

This area is used to apply the Dimensions Constraints to the sketch. In this area, two check boxes are available. These check boxes are used to apply dimensions during the creation of sketch.

Over-constrained Dimensions

This area is used to control the over defined dimensions applied to the sketch. In this area, two radio buttons are available. If you select the **Apply driven dimensions** radio button, you will able to apply the over defined dimension to the sketch. In this case over defined dimension is considered as the reference dimension. If you select the **Warm of overconstrainted condition** radio button, you will not able to apply the over defined dimensions to the sketch. In this case, a warning massage will be displayed.

Interface

In the **Interface** tab, two areas are available. The options in this tab are discussed next.

Constraint Interface Priority

This area is used to set up the constraints interface priority. You need to select the appropriate radio button to set up the priority.

Selection for Constraint Inference

In this area, nine check boxes corresponding to nine constraints are available. All check boxes are selected by default. However, if you need to clear all the constraints, choose the **Clear All** button. You can manually select or clear the required constraint by selecting the corresponding check box provided on the right of the constraint symbols. The selected constraints will be applied automatically to the geometry while sketching.

Relax Mode

In this tab, the **Enable Relax Mode** check box is available. If you select this check box, you will be able to remove the constraints from the geometry while dragging the sketch. In this case, you can remove only that constraint whose respective check box is selected in the **Constraints to remove in relax dragging** area.

Scope of Constraint Inference



Ribbon: Sketch > Constrain > Constraint Inference Scope



The **Constraint Inference Scope** tool is used to set the geometry to which the constraint is applied while drawing. You can invoke this tool from the **Constrain**

panel of the **Sketch** tab. On invoking this tool, the **Constraint Inference Scope** dialog box displayed. In this dialog box, the **Geometry in current command** radio button is selected by default. As a result, the constraint is applied to the current geometry. If you select the **Select** check box, the **Select** button will be activated automatically. You can use this button to select the geometry to which the constraints will be applied. If you select the **All Geometry** radio button, the constraint will be applied to all the active sketches.

DELETING GEOMETRIC CONSTRAINTS

Autodesk Inventor allows you to delete the constraints applied to the selected entities. To delete constraints, first you need to invoke the constraint box by using the **Show Constraints** tool. Once the constraints are displayed, exit the **Show Constraints** tool by pressing the ESC key. Next, move the cursor over the constraint that you want to delete; it will be highlighted in red. Click the left mouse button to select the constraint. Next, move the cursor away and right-click, and then choose **Delete** from the Marking menu, see Figure 3-8. The selected constraint will be deleted. Similarly, you can delete all unwanted constraints from the sketch.

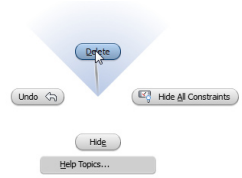

Figure 3-8 *Choosing the* ***Delete*** *option from the Marking Menu*

Note

The total number of constraints and dimensions required to fully constrain a sketch is displayed at the lower right corner of the drawing window.

Tip. *When you move the cursor close to the constraint, its references will be highlighted in the sketch. For example, if you move the cursor over the Perpendicular constraint, the lines on which this constraint is applied will be highlighted. This allows you to confirm that the constraint selected is correct.*

ADDING DIMENSIONS TO SKETCHES

Ribbon: Sketch > Constrain > Dimension



After drawing a sketch and adding constraints to it, dimensioning is the next most important step in creating a design. As mentioned earlier, Autodesk Inventor is a parametric solid modeling package. The parametric property ensures that irrespective of its original size, the selected entity is driven by the specified dimension value. Therefore, whenever you modify or apply dimension to an entity, it is forced to change its size with respect to the specified dimension value. The type of dimension to be applied varies according to the type of entity selected. For example, if you select a line segment, linear dimensions will be applied and if you select a circle, diameter dimensions will be applied. Note that all these types of dimensions can be applied using the same dimensioning tool. To edit the dimension, double-click on the dimension; the **Edit Dimension** edit box will be displayed, refer to Figure 3-9. Enter the desired value in the edit box to modify the dimensions. The selected entity will be driven to the dimension value defined in this edit box. You can enter a new value for the dimension or choose the button on the right of this edit box to accept the default value.

Evaluation Copy. Do not reproduce. For information visit www.cadcim.com

If you do not want to edit the dimensions after they have been placed, invoke the **Dimension** tool and then right-click to display the Marking Menu, refer to Figure 3-10. Clear the check mark on the left of the **Edit Dimension** option by choosing it again. When you place a dimension now, the **Edit Dimension** edit box will not be displayed. To edit the dimension value in this case, click on it after placing, if the **Dimension** tool is still active. If the tool is not active, double-click on the dimension; the **Edit Dimension** edit box will be displayed. Enter the new dimension value in this toolbar. The dimensioning techniques available in Autodesk Inventor are discussed next.

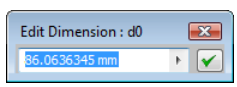

Figure 3-9 *The* ***Edit Dimension*** *edit box*

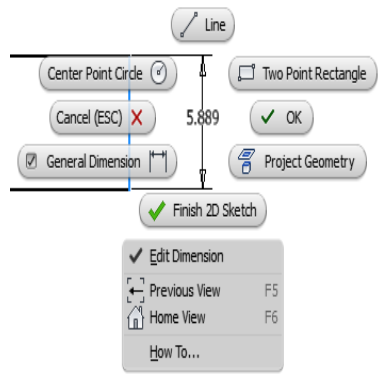

Figure 3-10 *Choosing* ***Edit Dimension*** *from the Marking Menu*

Linear Dimensioning

The linear dimensions are defined as the dimensions that specify the shortest distance between two points. You can apply linear dimensions directly to a line or select two points or entities to apply the linear dimension between them. The points that you can select include the endpoints of lines, splines, or arcs, or the center points of circles, arcs, or ellipses. You can dimension a vertical or a horizontal line by directly selecting it. As soon as you select it, the dimension will be attached to the cursor. You can place the dimension at any desired location. If the priority for editing the dimensions is set, the **Edit Dimension** toolbar will be displayed as soon as you place the dimension. To place the dimension between two points, select the points one by one. After selecting the second point, right-click to display the Marking menu, as shown in Figure 3-11. In this menu, choose the dimension type.

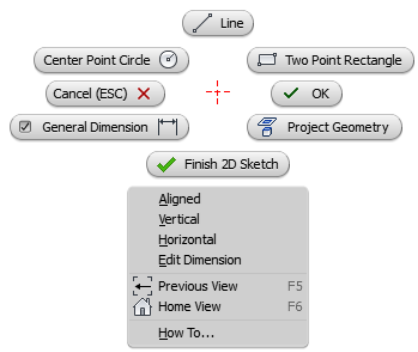

Figure 3-11 *Marking menu displaying various options to dimension two points*

If you choose **Horizontal**, the horizontal dimension will be placed between the two selected points. If you choose **Vertical**, the vertical dimension

Evaluation Copy. Do not reproduce. For information visit www.cadcim.com

will be placed between the two selected points. If you choose **Aligned**, the aligned dimension will be placed between the two selected points. Figure 3-12 shows the linear dimensioning of lines and Figure 3-13 shows the linear dimensioning of two points.

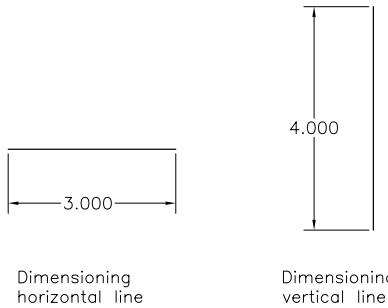

Figure 3-12 *Linear dimensioning of lines*

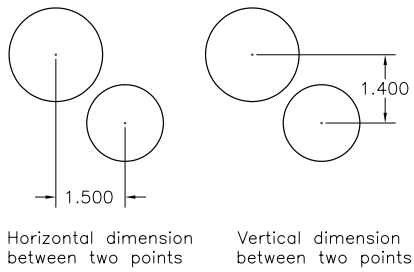

Figure 3-13 *Linear dimensioning of two points*

You can also apply a horizontal or vertical dimension to an inclined line, see Figure 3-14. To apply these dimensions, select the inclined line and then right-click; a Marking Menu similar to the one shown in Figure 3-11 will be displayed. In this menu, choose **Horizontal** to place the horizontal dimension and **Vertical** to place the vertical dimension.

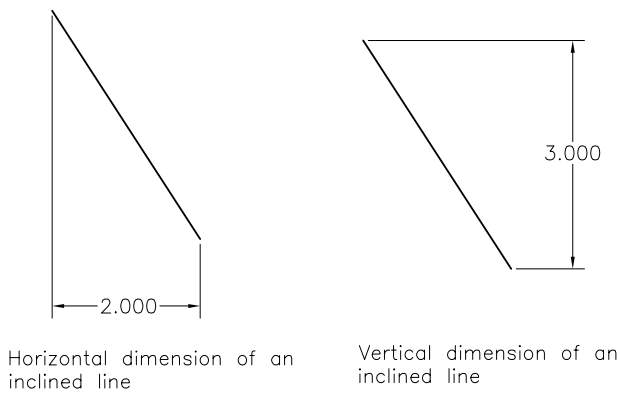

Figure 3-14 *Linear dimensioning of an inclined line*

Aligned Dimensioning

The aligned dimensions are used to dimension the lines that are not parallel to the X or Y-axis. This type of dimension measures the actual distance of the aligned lines or the lines drawn at a certain angle. To apply the aligned dimension, select the inclined line and then right-click; a Marking Menu will be displayed, refer to Figure 3-11. Choose the **Aligned** option from the Marking Menu; the aligned dimension of the selected line will be attached to the cursor. Next, click in the drawing window to specify the location of the aligned dimension. You

Evaluation Copy. Do not reproduce. For information visit www.cadcim.com

can also apply the aligned dimension between two points. The points include the endpoints of lines, splines, or arcs or the center points of arcs, circles, or ellipses. To apply the aligned dimension between two points, invoke the **Dimension** tool. Next, select the two points and right-click; a Marking Menu will be displayed. Choose the **Aligned** option from the Marking Menu. Figures 3-15 and 3-16 show the aligned dimensions applied to various objects.



Tip. *Alternatively, to apply the aligned dimension, select the* ***Dimension*** *tool from the* ***Ribbon*** *and then select the aligned entity to be dimensioned. Next, move the cursor away from the line and then click again on the same line. Now, click on the drawing window to place the aligned dimension.*

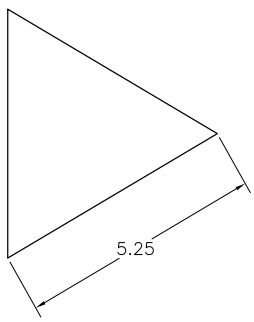

Figure 3-15 *Aligned dimension of a line*

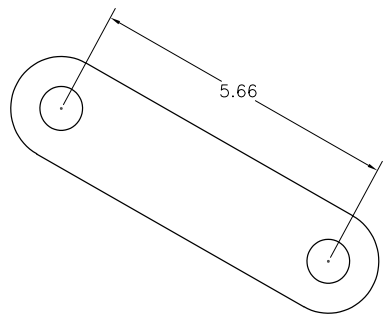

Figure 3-16 *Aligned dimension between two points*

Angular Dimensioning

The angular dimensions are used to dimension angles. You can select two line segments or use three points to apply the angular dimensions. You can also use angular dimensioning to dimension an arc. All these options of angular dimensioning are discussed next.

Angular Dimensioning Using Two Line Segments

You can directly select two line segments to apply angular dimensions. To do so, invoke the **Dimension** tool of the **Constrain** panel of **Sketch** tab. You can also invoke **General Dimension** from the Marking Menu and then select a line segment using the left mouse button. Instead of placing the dimension, select the second line segment. Next, place the dimension to measure the angle between the two lines. While placing the dimension, you need to be careful about the point where you place the dimension. This is because depending on the location of the placement of dimension with respect to the lines, the vertically opposite angles will be displayed. Figure 3-17 shows the angular dimension between two lines and Figure 3-18 shows the dimension of the vertically opposite angle between two lines. Also, depending on the location of the dimension, the major or minor angle value will be displayed. Figure 3-19 shows the major angle dimension between two lines and Figure 3-20 shows the minor angle dimension between the same set of lines.

Evaluation Copy. Do not reproduce. For information visit www.cadcim.com

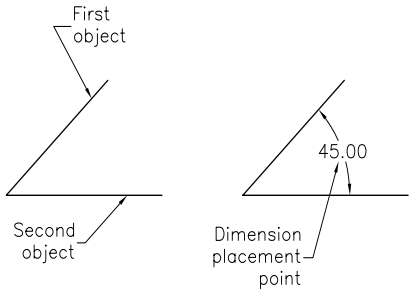

Figure 3-17 *Angular dimensioning between two lines*

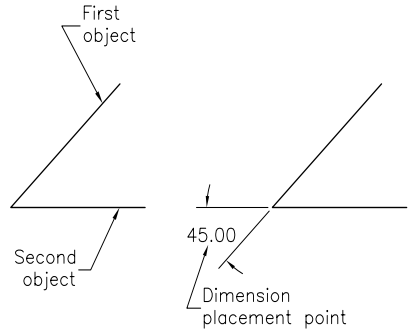

Figure 3-18 *Dimension of the vertically opposite angle between two lines*

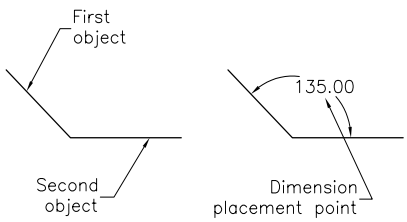

Figure 3-19 *Major angle dimension*

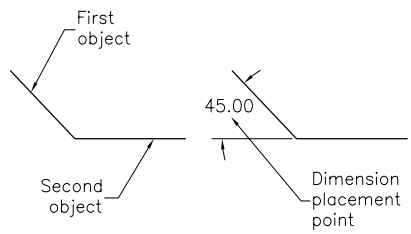

Figure 3-20 *Minor angle dimension*

Angular Dimensioning Using Three Points

You can also apply angular dimensions using three points. Remember that the three points should be selected in clockwise or counterclockwise sequence. The points that can be used to apply the angular dimensions include the endpoints of lines or arcs, or the center points of arcs, circles, and ellipses. Figure 3-21 shows angular dimensioning using three points.

Angular Dimensioning of an Arc

You can use angular dimensions to dimension an arc. In case of arcs, the three points are the endpoints and the center point of the arc. Note that the points should be selected in the clockwise or counterclockwise sequence, but the center point should always be the second selection point. Figure 3-22 shows the angular dimensioning of an arc. In Autodesk Inventor, you can also assign angular dimensions to an arc by using the Marking menu. To do so, invoke the **Dimension** tool. Then select the arc and right-click; a Marking menu will be displayed. Choose **Dimension Type** from the Marking menu; a cascading menu will be displayed, choose **Arc Length** from the cascading menu before placing the dimension on the graphics window, refer to Figure 3-23. Figure 3-24 shows the angular dimensioning of an arc using the Marking menu.

Evaluation Copy. Do not reproduce. For information visit www.cadcim.com

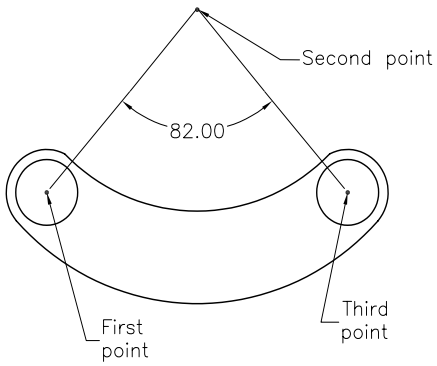

Figure 3-21 *Angular dimensioning using three points*

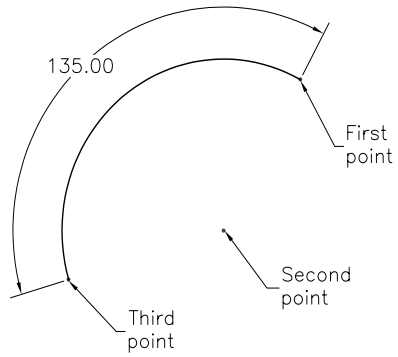

Figure 3-22 *Angular dimensioning of an arc*

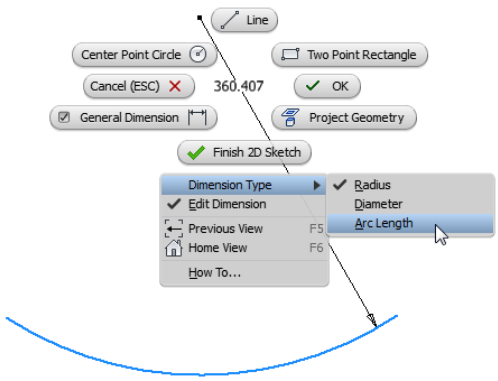

Figure 3-23 *Angular dimensioning using Marking menu*

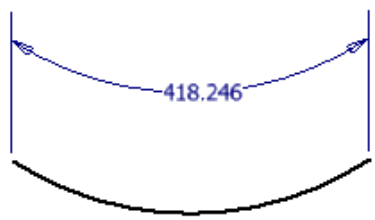

Figure 3-24 *Angular dimensioning of an arc using Marking menu*

Diameter Dimensioning

Diameter dimensions are applied to dimension a circle or an arc to specify its diameter. In Autodesk Inventor, when you select a circle to dimension, the diameter dimension is applied to it by default. If you select an arc to dimension it, the radius dimension will be applied to it. You can also apply the diameter dimension to an arc. To do so, invoke the **Dimension** tool and then select the arc. Next, right click to display the Marking menu, as shown in Figure 3-25. From the Marking menu, choose **Dimension Type**; a cascading menu is displayed. Choose **Diameter** from this menu to apply the diameter dimension. Figure 3-26 shows a circle and an arc with diameter dimensions.

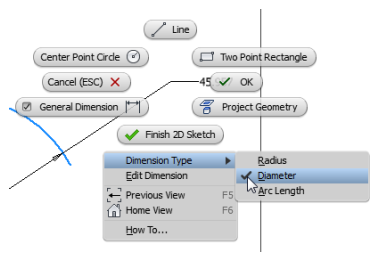

Figure 3-25 *Marking menu to apply a diameter dimension to an arc*

Evaluation Copy. Do not reproduce. For information visit www.cadcim.com

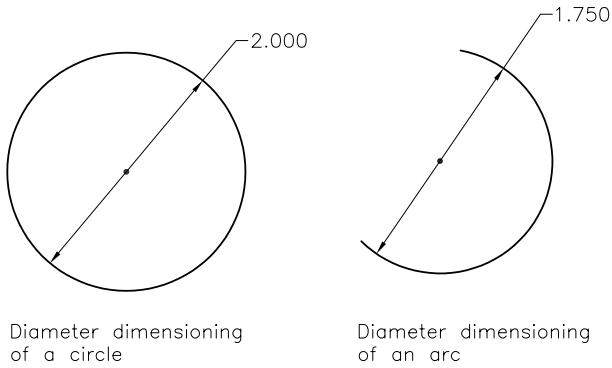

Figure 3-26 *Diameter dimensioning of a circle and an arc*

Radius Dimensioning

Radius dimensions are applied to dimension an arc or a circle to specify its radius. As mentioned earlier, by default, circles are assigned diameter dimensions and arcs are assigned radius dimensions. However, you can also apply the radius dimension to a circle. To do so, invoke the **Dimension** tool and then select the circle. Next, right-click to display the Marking menu, as shown in Figure 3-27. From the Marking menu, choose **Dimension Type**; a cascading menu is displayed. Choose **Radius** from this menu to apply the radius dimension. Figure 3-28 shows an arc and a circle with radius dimensions.

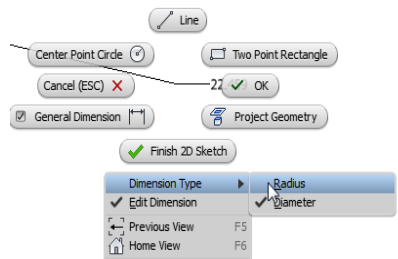

Figure 3-27 *Marking menu to apply a radius dimension to an arc*

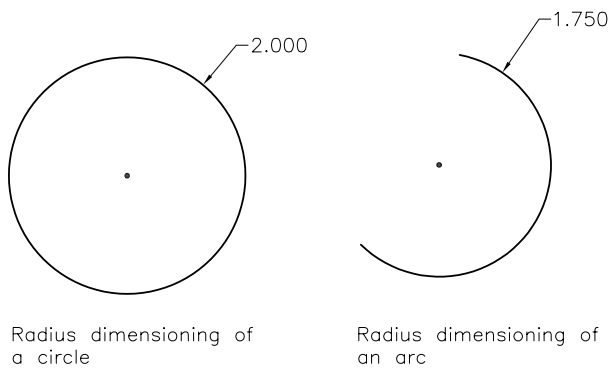

Figure 3-28 *Radius dimensioning of a circle and an arc*

Evaluation Copy. Do not reproduce. For information visit www.cadcim.com

Linear Diameter Dimensioning

Linear diameter dimensioning is used to dimension the sketches of the revolved components. The sketch for a revolved component is drawn using simple sketcher entities. For example, if you draw a rectangle and revolve, it will result in a cylinder. Now, if you dimension the rectangle using the linear dimensions, the same dimensions will be displayed when you generate the drawing views of the cylinder. Also, the same dimensions will be used while manufacturing the component. But these linear dimensions will result in a confusing situation in manufacturing. This is because while manufacturing a revolved component, the dimensions have to be specified as the diameter of the revolved component. The linear dimensions will not be acceptable in manufacturing a revolved component. To resolve this problem, the sketches for the revolved features are dimensioned using the linear diameter dimensions. These dimensions display the distance between the two selected line segments as a diameter, that is, double the original length. For example, if the original dimension between two entities is 10 mm, the linear diameter dimension will display it as 20 mm. This is because when you revolve a rectangle with 10 mm width, the diameter of the resultant cylinder will be 20 mm. In this type of dimension, if you select two lines, the line selected first will act as the axis of revolution for the sketch and the line selected last will result in the outer surface of the revolved feature. It means the line selected last will be the one that will be dimensioned. But, if one of these lines is a centerline drawn by choosing the **Centerline** tool from the **Format** panel, the centerline will be considered as the axis of revolution.

To apply linear diameter dimensions, invoke the **Dimension** tool; you will be prompted to select the first geometry to dimension. Select the first line; you will be prompted to select the second geometry to dimension. Select the second line with reference to which you want to apply the linear diameter dimensions. If the first line selected is a centerline, the linear diameter dimension will be displayed. Alternatively, right-click and then choose **Linear Diameter** from the Marking Menu, see Figure 3-29. You will notice that the distance between the two lines is displayed as twice the distance. Also, the dimension value is preceded by the **Ø** symbol, indicating that it is a linear diameter dimension. Figures 3-30 and 3-31 show the use of linear diameter dimensioning.

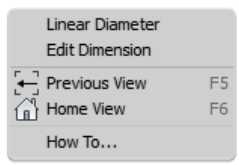

Figure 3-29 *Choosing the* ***Linear Diameter*** *option*

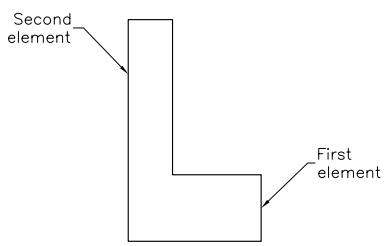

Figure 3-30 *Selecting elements for linear diameter dimension*

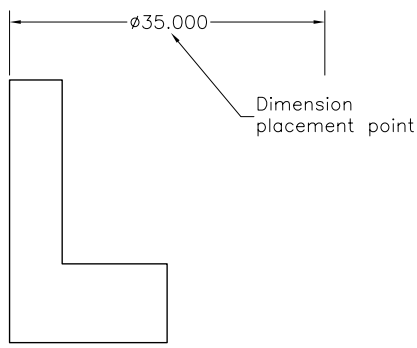

Figure 3-31 *The linear diameter dimension*

Evaluation Copy. Do not reproduce. For information visit www.cadcim.com



Tip. *After invoking the* ***Dimension*** *tool, as you move the cursor close to the sketched entities, a small symbol will be displayed close to the cursor. This symbol displays the type of dimension that will be applied. For example, if you select a line, the linear dimensioning or aligned dimensioning symbol will be displayed. If you move the cursor close to another line after selecting the first, the symbol of angular dimensioning will be displayed. These symbols help you in determining the type of dimensions that will be applied.*

In Autodesk Inventor, the ellipses are dimensioned as half of the major and minor axes distances. To dimension an ellipse, invoke the ***Dimension*** *tool and then select the ellipse. Now, if you move the cursor in the vertical direction, the axis of the ellipse along the X-axis will be dimensioned in terms of its half length. Similarly, if you move the cursor in the horizontal direction, the axis of the ellipse along the Y axis will be dimensioned equal to its half-length.*

To distinguish whether the dimension applied to an arc or a circle is a radius or a diameter, try to locate the number of arrowheads in the dimension. If there are two arrowheads in the dimension and the dimension line is placed inside the circle or the arc, it is a diameter dimension. The radius dimension has one arrowhead and the dimension line is placed outside the circle or the arc.

SETTING THE SCALE OF A SKETCH

In Autodesk Inventor, if you change the current length of an entity by changing its dimension value, all the other entities of the sketch gets modified proportionally or scaled accordingly. Note that this will be applicable only if no other dimension is applied to the sketch. As you apply the second dimension to the sketch, the sketch will not be scaled proportionally, on changing the dimension value. Figure 3-32 shows the sketch without any dimension and Figure 3-33 shows the sketch scaled automatically after applying the first dimension to it.

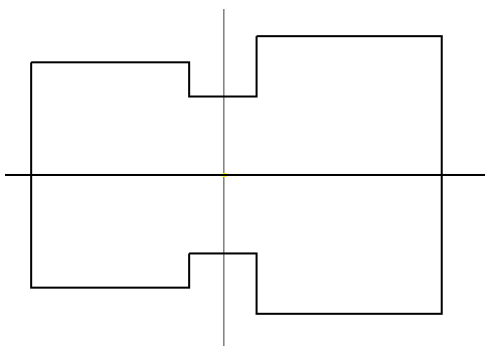

Figure 3-32 *Sketch on the graphics screen*

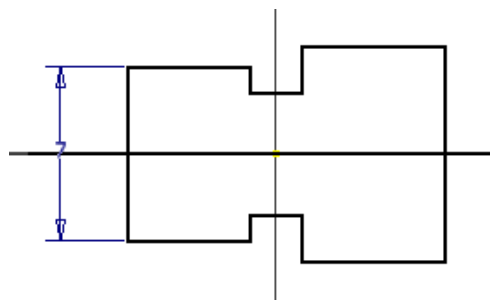

Figure 3-33 *Sketch resized after editing the first dimension*

Evaluation Copy. Do not reproduce. For information visit www.cadcim.com

CREATING DRIVEN DIMENSIONS

Ribbon: Sketch > Format > Driven Dimension



This toggle button is used to switch between the driven dimension and the sketch (driving) dimension. A dimension is called as a sketch (driving) dimension, if it forces an entity to change its length and orientation. A driven dimension is the one whose value depends on the value of the sketch (driving) dimension. The driven dimensions are enclosed within parenthesis and display the current value of the sketched geometry. This value cannot be modified. If you change the value of the sketch (driving) dimension, the value of the driven dimension will change automatically, as shown in Figures 3-34 and 3-35. All dimensions applied after choosing the **Driven Dimension** button will be the driven dimensions. To convert sketch (driving) dimensions into driven dimensions, select the required sketch (driving) dimension and choose the **Driven Dimension** button from the **Format** panel.

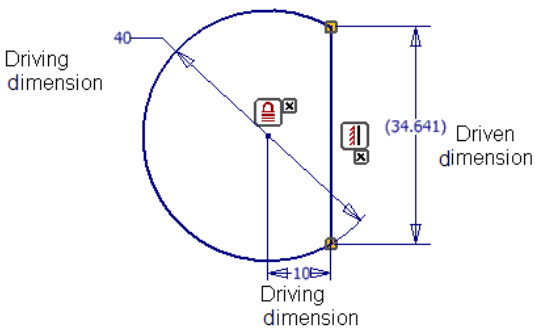

Figure 3-34 *Driving dimension and driven dimension in a sketch*

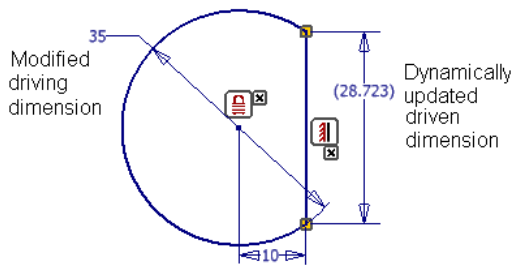

Figure 3-35 *Modified driving dimension and dynamically updated driven dimension*

UNDERSTANDING THE CONCEPT OF FULLY-CONSTRAINED SKETCHES

A fully-constrained sketch is the one whose all the entities are completely constrained to their surroundings using constraints and dimensions. In a fully-constrained sketch, all degrees of freedom of the sketch are constrained. A fully-constrained sketch cannot change its size, location, or orientation unexpectedly. Whenever you draw a sketched entity, it will turn black in color. If you add dimensions and constraints to fully constrain the sketch, the entities will turn purple. There is one more method to understand whether the sketched entities are fully-constrained or not. In this method, you need to right-click on the sketched entity and choose the **Display Degrees of Freedom** option from the Marking Menu displayed; the entities will display the available degrees of freedom such as horizontal, vertical, angular, or rotational. Alternatively, click on the **Show All Degrees of Freedom** toogle button available at the bottom of the graphics window to display the degrees of freedom. Note that while creating the base sketch in Autodesk Inventor, you need to dimension it with respect to a fixed point to fully constrain it. To do so, you can fix the sketch with the origin, which is already

Evaluation Copy. Do not reproduce. For information visit www.cadcim.com

fixed by default. You can control the visibility of this origin. To hide this point, choose the **Application Options** button from the **Tools** tab; the **Application Options** dialog box will be invoked. Choose the **Sketch** tab and then clear the **Autoproject part origin on sketch create** check box. Next, close the dialog box.



Tip. *In Autodesk Inventor, a fully-constrained sketch is displayed by*  *symbol in the* ***Browser Bar****, when you switch to the Part module.*

MEASURING SKETCHED ENTITIES

Autodesk Inventor allows you to measure various parameters of the sketched entities. The parameters that you can measure are distances, angles, loops, and area. Measuring these parameters is discussed next.

Measuring Distances

Ribbon: Inspect > Measure > Distance

Autodesk Inventor allows you to measure the length of a line segment, radius of an arc, diameter of a circle, minimum distance between two entities, or coordinates of a point. All these distances can be measured by using the **Distance** tool from the **Measure** panel. On invoking this tool, the **Measure Distance** dialog box will be displayed and you will be prompted to select the first item. The name of the **Measure Distance** dialog box is modified depending upon the type of entities selected to be measured. The methods of measuring distances between various entities are discussed next.



Tip. *To restart measuring the distances, right-click in the graphics window to display a shortcut menu and then choose* ***Restart****; you will be prompted to select the first element to be measured. Alternatively, choose the right arrow displayed next to the display box in the* ***Measure Distance*** *dialog box and then choose the* ***Restart*** *option from the flyout displayed.*

Measuring the Length of a Line Segment

When you invoke the **Distance** tool, the **Measure Distance** dialog box will be displayed and you will be prompted to select the first entity. Select a line segment; the **Measure Distance** dialog box will be changed to the **Length** dialog box and the length of the selected line segment will be displayed in this dialog box, see Figure 3-36.

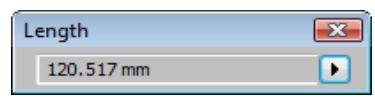

Figure 3-36 *The* ***Length*** *dialog box displaying the length of a line segment*

Evaluation Copy. Do not reproduce. For information visit www.cadcim.com

Measuring the Distance between a Point and a Line Segment

To measure the distance between a point and a line segment, invoke the **Distance** tool and then select the point. The **Measure Distance** dialog box will be modified to the **Position** dialog box, which shows the X, Y, and Z coordinates of the point, and you will be prompted to select the next entity. Select the line; the **Position** dialog box will change to the **Minimum Distance** dialog box. This dialog box will display the minimum distance between the point and the line, and the length of the line, see Figure 3-37.

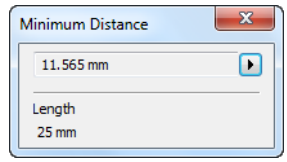

Figure 3-37 *The* ***Minimum Distance*** *dialog box displaying the distance between the lines*

Measuring the Coordinates of a Point

To measure the coordinates of a point with respect to the current coordinate system, invoke the **Distance** tool; you will be prompted to select the first element. Select the point whose coordinates you want to know. The selectable points include the endpoints of lines, arcs, or splines, center point of arcs, circles, or ellipses, or hole centers. If you select a hole center or the center point, the **Measure Distance** dialog box will change into the **Position** dialog box and the X, Y, and Z coordinates of the selected point with respect to the current coordinate system will be displayed, see Figure 3-38. However, if you select an endpoint, the coordinates will be specified in the **Measure Distance** dialog box.

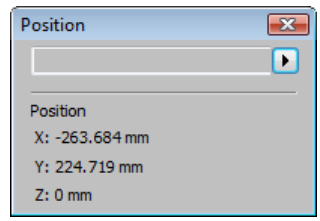

Figure 3-38 *The* ***Position*** *dialog box displaying the coordinates of a point*

Measuring the Distance between Two Points

To measure the distance between two points, invoke the **Distance** tool and then select the first point; the coordinates of the selected point will be displayed in the **Position** dialog box. You will be prompted to select the second element. Select the second point; the **Position** dialog box will be changed to the **Minimum Distance** dialog box. This dialog box will display the distance between the two points. This dialog box will also display the coordinates of the second point. You will also notice the **Delta X**, **Delta Y**, and **Delta Z** values in this dialog box, see Figure 3-39. These values are the distances between the two selected points along the X, Y, and Z axes.

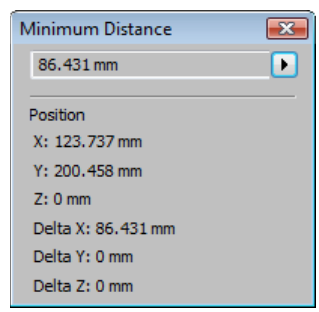

Figure 3-39 *The* ***Minimum Distance*** *dialog box*



Tip. *In Autodesk Inventor, you can also measure distance between the midpoint of a linear segment and midpoint of a circular arc.*

Evaluation Copy. Do not reproduce. For information visit www.cadcim.com

Measuring the Radius of an Arc or the Diameter of a Circle

You can also measure the radius of an arc or the diameter of a circle by using the **Distance** tool. When you invoke this tool, the **Measure Distance** dialog box will be displayed and you will be prompted to select the first item. If you select an arc or move the cursor over the arc, this dialog box will be momentarily changed to the **Radius** dialog box and will display the radius of the arc, see Figure 3-40. If you select a circle or move the cursor over the circle, this dialog box will momentarily change into the **Diameter** dialog box and will display the diameter of the circle, see Figure 3-41. Note that if you select an arc or a circle, you will not be prompted to select the second element because you cannot calculate any value other than their radius or diameter.

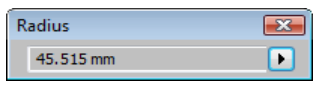

Figure 3-40 *The **Radius** dialog box displaying the radius of the arc*

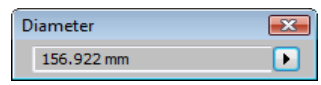

Figure 3-41 *The **Diameter** dialog box displaying the diameter of the circle*

Measuring Angles

Ribbon: Inspect > Measure > Angle

To measure an angle, right-click in the drawing window and choose **Measure > Measure Angle** from the Marking menu; the **Measure Angle** dialog box will be displayed. Alternatively, choose the **Angle** tool from the **Measure** panel. This tool is used to measure the angle between two line segments or among three points. Both these methods for measuring angles are discussed next.

Measuring the Angle between Two Lines

To measure the angle between two lines, invoke the **Angle** tool; the **Measure Angle** dialog box will be displayed and you will be prompted to select the first item. Select the first line; you will be prompted to select the second line. Select the second line; the **Measure Angle** dialog box will change momentarily into the **Angle** dialog box and the angle between the selected line segments will be displayed, refer to Figure 3-42.

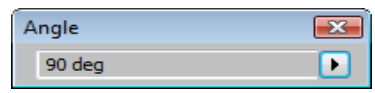

Figure 3-42 *The **Angle** dialog box displaying the angle between two lines*

Measuring the Angle Using Three Points

You can also measure the angle using three points. When you invoke the **Angle** tool, you will be prompted to select the first item. Select the first point; you will be prompted to select the next point. After you select the second point, you will again be prompted to select the next point. Select the third point. Once you have selected the three points, Autodesk Inventor draws imaginary lines between the first and second points as well as between the second and third points. The angle between these two imaginary lines will be measured and displayed in the dialog box, as shown in Figures 3-43 and 3-44.

Evaluation Copy. Do not reproduce. For information visit www.cadcim.com

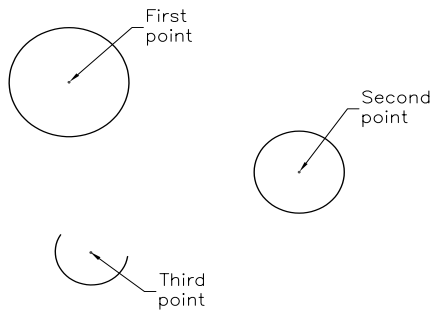

Figure 3-43 *Selecting three points*

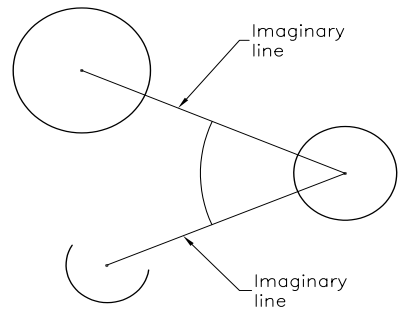

Figure 3-44 *Angle between imaginary lines*



Tip. *Autodesk Inventor allows you to switch from one measuring tool to another. This is done using the options in the flyout that is displayed on choosing the arrow on the right in the dialog box of any measuring tool. When you choose this arrow, the flyout will be displayed with the options for invoking other measuring tools.*

Measuring Loops

Ribbon: Inspect > Measure > Loop

Autodesk Inventor allows you to measure closed loops. To measure closed loops, right-click in the drawing window and choose **Measure > Measure Loop** from the Marking menu; the **Measure Loop** dialog box will be displayed. Alternatively, choose the **Loop** tool from the **Measure** panel; you will be prompted to select a face or a loop. Select the loop to be measured; the **Measure Loop** dialog box will be momentarily changed to the **Loop Length** dialog box and the measurement will be displayed in it. Figure 3-45 shows the **Measure Loop** dialog box with the measurement of a loop.

Measuring the Area

Ribbon: Inspect > Measure > Area

To measure the area of closed loops, right-click in the drawing window and choose **Measure > Measure Area** from the Marking Menu; the **Measure Area** dialog box will be displayed and you will be prompted to select a face or a loop. Select the closed loop to measure the area; the **Measure Area** dialog box will be momentarily changed to the **Area** dialog box and the area of the loop will be displayed in it. Figure 3-46 shows the **Area** dialog box with the area of a closed loop.

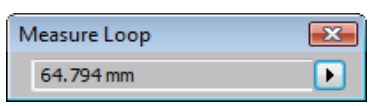

Figure 3-45 *The **Measure Loop** dialog box*

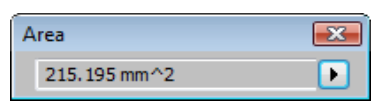

Figure 3-46 *The **Area** dialog box*

Evaluation Copy. Do not reproduce. For information visit www.cadcim.com



Tip. *You can also measure the loop or the area defined by the face of an existing feature. You will learn more about features in the later chapters.*

Adding Linear Measurements

Ribbon: Measure > Distance / Angle

You can calculate the total measurement of several linear measurements by adding their values. To do so, invoke the **Distance** or **Angle** tool. Next, select the geometry or the distance to be measured; the measurement will be displayed in the **Measure Distance** dialog box. Next, click the arrow on the right side of the display box; a flyout will be displayed. Choose the **Add to Accumulate** option from the flyout and choose the same arrow again; the same flyout will be displayed. Choose the **Restart** option from the flyout. Next, choose another measurement and follow the same procedure until you add all the desired measurements. Then, click on the arrow and choose the **Display Accumulate** option from the flyout; the sum of the measurements will be displayed in the dialog box.

Clearing Accumulated Dimensions

On choosing the **Clear Accumulate** option, you can clear all the accumulated measurements and reset the sum to zero. This option is located below the **Add to Accumulate** option.

Evaluating Region Properties

Ribbon: Inspect > Measure > Region Properties

This tool is used to evaluate the properties of the closed loop sketch such as area, perimeter, and also display the region properties of the sketch such as Area and Moment of Inertia by taking measurements from the sketch coordinate system. To invoke this tool, right-click in the drawing window and choose **Measure > Region Properties** from the Marking menu; the **Region Properties** dialog box will be displayed, as shown in Figure 3-47. Alternatively, invoke the **Region Properties** tool by choosing the **Region Properties** tool from the **Measure** panel. The options in this dialog box are discussed next.

Selections

When you invoke the **Region Properties** dialog box, this option is chosen by default and you will be prompted to select one or more closed sketch loops. Select one or more closed sketch loops from the drawing window.

Dual Units

You can select the required unit of measurement from this drop-down list to display the results of measurements in the selected unit. You can view the results in two different units.

Calculate

After setting the options in the **Selections** and the **Dual Units** area, choose the **Calculate** button; the results will be displayed in the display box. In case you add or remove a closed loop

Evaluation Copy. Do not reproduce. For information visit www.cadcim.com

in the **Selections** area or change the unit in the **Dual Units** drop-down list, the recalculation will occur and the updated results will be displayed in the display box.

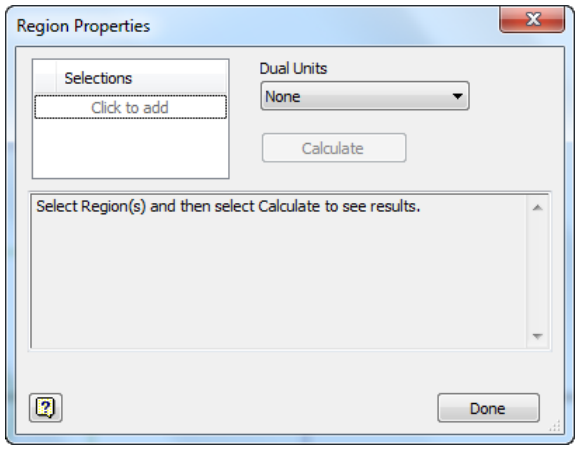

Figure 3-47 *The* ***Region Properties*** *dialog box*

TUTORIALS

From this chapter onward, you will use the parametric feature of Autodesk Inventor for drawing and dimensioning the sketches. The following tutorials will explain the method of drawing sketches with some arbitrary dimensions and then driving them to the dimension values required in the model.

Tutorial 1

In this tutorial, you will draw the sketch shown in Figure 3-48. This sketch is the same as the one drawn in Tutorial 2 of Chapter 2. After drawing the sketch, you will add the required constraints and then dimension it. **(Expected time: 30 min)**

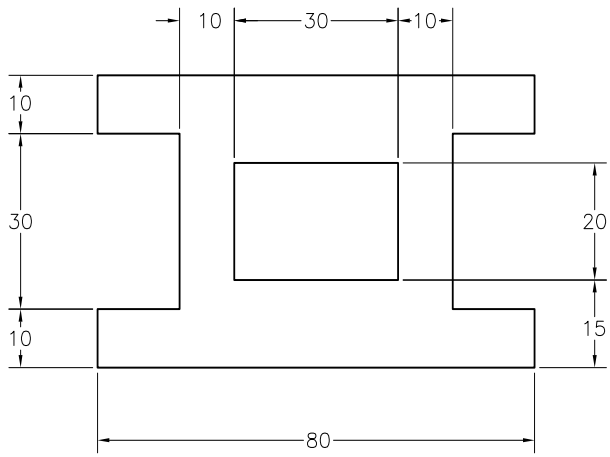

Figure 3-48 *Dimensioned sketch for Tutorial 1*

Evaluation Copy. Do not reproduce. For information visit www.cadcim.com

The following steps are required to complete this tutorial:

a. Start a new metric standard part file and invoke the Sketching environment.
b. Draw the initial sketch by using the **Line** and **Two point rectangle** tools, refer to Figure 3-49.
c. Add the required constraints and dimensions to complete the sketch, refer to Figure 3-51.
d. Dimension the sketch by using the origin to fully constrain it, refer to Figure 3-52.
e. Save the sketch with the name *Tutorial1* and then close the file.

Starting a New File and Invoking the Sketching Environment

Start Autodesk Inventor and then invoke the Sketching environment by selecting the sketching plane.

1. Start Autodesk Inventor by double-clicking on its shortcut icon on the desktop of your computer or by using the **Start** menu.

2. Choose the **New** tool from **Quick Access Toolbar** and start a new metric standard part file by using the **Metric** tab of the **Create New File** dialog box.

3. Choose the **Start 2D Sketch** button from the **Sketch** panel of the **3D Model** tab; the default planes are displayed and you are prompted to select the sketching plane.

4. Choose the **Home** button from the ViewCube; the current orientation of the sketch plane is changed.

5. Select the **XZ** plane as the sketching plane from the graphics window; the Sketching environment is invoked and the **XZ** Plane becomes parallel to the screen.

Drawing the Initial Sketch

1. Using the **Line** and **Two point rectangle** tools, draw the required sketch similar to the one shown in Figure 3-48. You do not need to draw the sketch to the exact length. Use the temporary tracking option for drawing the sketch. For your reference, all lines in the sketch are numbered, see Figure 3-49.

   Note that in this sketch, the display of the X and Y axes has been turned off.

Adding Constraints to the Sketch

It is evident from Figure 3-49 that some of the lines need to be of the same length. For example, lines 1 and 7, lines 2 and 6, lines 8 and 12, and so on. To make the lines of the same length, you can use two options. In the first option, you can assign dimensions to all these lines. However, this will increase the number of dimensions in the sketch. In the second option, you can apply constraints that will force the lines to maintain an equal length. You can apply the **Equal** constraint to all the lines having the same length. This constraint will relate the length of one of the lines with respect to the other. Now, if you dimension any one of the related lines, all other lines related to it will be forced to acquire the same dimension value. The **Equal** constraint is applied in pairs.

Evaluation Copy. Do not reproduce. For information visit www.cadcim.com

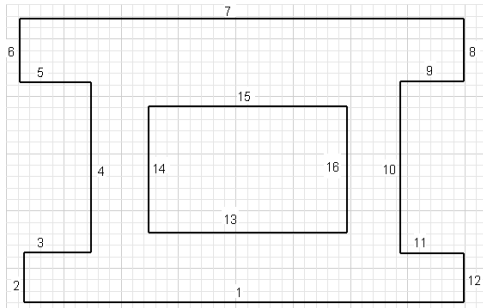

Figure 3-49 *Initial sketch drawn using the sketching tools*

1. Choose the **Equal** tool from the **Constrain** panel of the **Sketch** tab to invoke the **Equal** constraint.

   When you invoke this constraint, you are prompted to select the first line, circle, or arc.

2. Select line 2; the color of this line is changed to blue and you are prompted to select the second line, circle, or arc. Select line 6; the **Equal** constraint is applied to lines 2 and 6. Again, you are prompted to select the first line, circle, or arc. Select line 6 as the first line and then line 8 as the second line.

   While applying any of these constraints, if the **Autodesk Inventor Create Constraint** warning message box is displayed, choose **Cancel** to exit that box.

3. Similarly, select lines 8 and 12, 1 and 7, 3 and 5, 5 and 9, 9 and 11. The **Equal** constraint is applied to all these pairs of lines. Next, right-click in the drawing window, and then choose **Cancel (ESC)** from the Marking Menu displayed.

4. If needed, apply the **Horizontal** and **Vertical** constraints to the horizontal and vertical lines of the sketch, respectively.

Dimensioning the Sketch

Once all the required constraints have been applied to the sketch, you can dimension it. As mentioned earlier in this chapter, whenever you modify or apply dimension to an entity, it is forced to change its size with respect to the specified dimension value.

Note

On applying the first dimension to the sketch and editing it, the whole scale of the sketch is modified accordingly.

1. Choose the **Dimension** tool from the **Constrain** panel of the **Sketch** tab. Alternatively, right-click anywhere in the graphics window and then choose **General Dimension** from the Marking menu displayed. Next, select line 1, refer to Figure 3-49.

Evaluation Copy. Do not reproduce. For information visit www.cadcim.com

As soon as you move the cursor close to line 1, it turns red and a small symbol is displayed, indicating that a linear dimension will be applied to this line. It is important to modify the value of the dimension after it is placed so that geometries are driven to the values that you require. Therefore, after selecting line 1, right-click to display the Marking menu. In this menu, choose **Edit Dimension**. If it has already been chosen, press ESC once. This ensures that the **Edit Dimension** toolbar is displayed whenever you place the dimension. This toolbar allows you to modify the dimension value.

2. Place the dimension below line 1; the **Edit Dimension** toolbar is displayed. Enter **80** as the length of line 1 in this toolbar and then choose the check mark on the right of this toolbar.

   You will notice that the length of this line is modified to **80** units. Also, the length of line 7 is modified because of the **Equal** constraint.

3. As the **Dimension** tool is still active, you are prompted again to select the geometry to dimension. Select line 2 and place the dimension on the left of this line; the **Edit Dimension** toolbar is displayed. Change the length of this line to **10** in this toolbar and press ENTER.

   You will notice that the length of lines 6, 8, and 12 is also forced to 10 units. This is because the **Equal** constraint has been applied to all these lines.

4. Select line 4 and place it along the previous dimension. Modify the dimension value in the **Edit Dimension** toolbar to **30** and press ENTER. Notice that the length of line 10 is also modified.

5. Select line 16 and place the dimension outside the sketch on the right. Modify the dimension value in the **Edit Dimension** toolbar to **20** and press ENTER.

6. Select line 15 and place the dimension outside the sketch on the top. Modify the dimension value to **30** in the **Edit Dimension** toolbar and press ENTER.

7. Now, to dimension the distance between lines 4 and 14, select them one by one. Place the dimension outside the sketch on the top and then change the dimension value to **10** in the **Edit Dimension** toolbar and press ENTER.

8. Similarly, select lines 16 and 10 to dimension the distance between these two lines and place the dimension outside the sketch on the top. Change the dimension value to **10** in the **Edit Dimension** toolbar and press ENTER. You will notice that the length of lines 5, 9, 3, and 11 is automatically adjusted because the **Equal** constraint has been applied to them.

9. To locate the inner rectangle vertically from the outer loop, select lines 1 and 13, and then place the dimension on the right of the sketch. Next, modify the dimension value in the **Edit Dimension** toolbar to **15** and press ENTER.

   With this, you have applied all the required constraints and dimensions to the sketch. Now

Evaluation Copy. Do not reproduce. For information visit www.cadcim.com

the sketch is ready to be converted into a feature. If you try to add more constraints or dimensions to this sketch, the **Autodesk Inventor Professional - Create Linear Dimension** error message box will appear, informing that adding this dimension will over-constrain the sketch, see Figure 3-50. If you still want this dimension to be displayed, choose the **Accept** button from this message box, the dimension will be added as a driven dimension. A driven dimension is placed inside parentheses and is not used during the manufacturing process. This dimension is used only for reference. Note that you cannot edit the value of a driven dimension. The sketch after applying all the dimensions and constraints should look similar to the one shown in Figure 3-51.

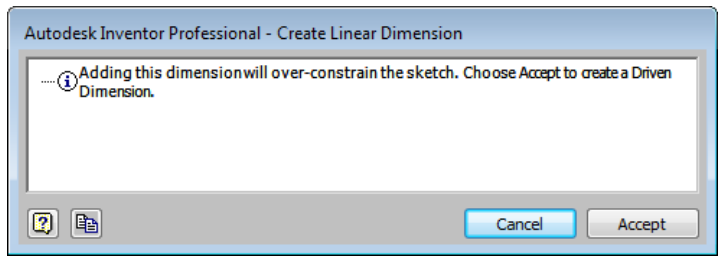

Figure 3-50 *The* ***Autodesk Inventor Professional*** *message box*

Even after adding all the dimensions, the color of entities in the sketch is blue. This is because the sketch is not fully constrained. In order to fully constrain the sketch, you need to constrain it with respect to the origin which is fixed by default.

10. Choose the **Coincident Constraint** tool from the **Constrain** panel of the **Sketch** tab; you are prompted to select the first curve or point.



11. Select the intersection point of lines 1 and 2, which is the lower left vertex of the sketch; you are prompted to select the second curve or point.

12. Select the origin; the entire sketch shifts itself such that the lower left vertex of the sketch is now at the origin.

    Note that in spite of its shift, the sketch is not completely visible in the drawing window.

13. Choose the **Zoom All** tool from the **Navigation Bar > Zoom** flyout to fit the sketch into the drawing window. You will notice that all the entities in the sketch turn purple, indicating that the sketch is fully constrained. Next, press ESC to exit the **Coincident Constraint** tool.

    Figure 3-52 shows the fully constrained sketch for Tutorial 1.

Evaluation Copy. Do not reproduce. For information visit www.cadcim.com

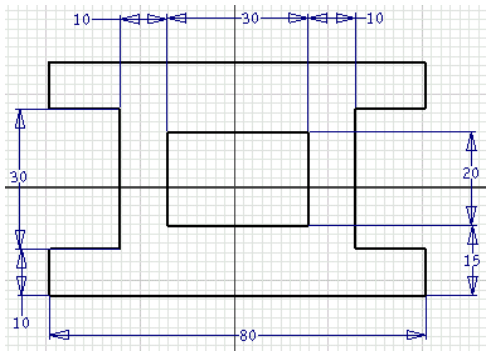

Figure 3-51 *Sketch after adding dimensions*

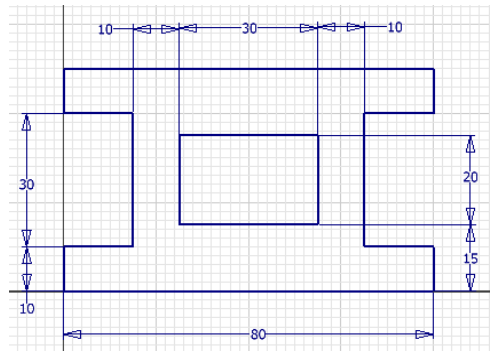

Figure 3-52 *Fully constrained sketch for Tutorial 1*

Saving the Sketch

1. Choose the **Finish Sketch** button from the **Exit** panel of the **Sketch** tab to exit the Sketching environment. Alternatively, choose **Finish Sketch** from the Marking menu to exit the Sketching environment.

2. Choose the **Save** tool from the **Quick Access Toolbar** or **Application Menu** and save the sketch with the name *Tutorial1* at the location given below:

   C:\Inventor_2015/c03

3. Choose **Close > Close** from the **Application Menu** to close the file.

Tutorial 2

In this tutorial, you will draw the sketch shown in Figure 3-53. This sketch is the same as the one drawn in Tutorial 4 of Chapter 2. After drawing it, you will apply the required constraints and dimensions to fully constrain it. **(Expected time: 30 min)**

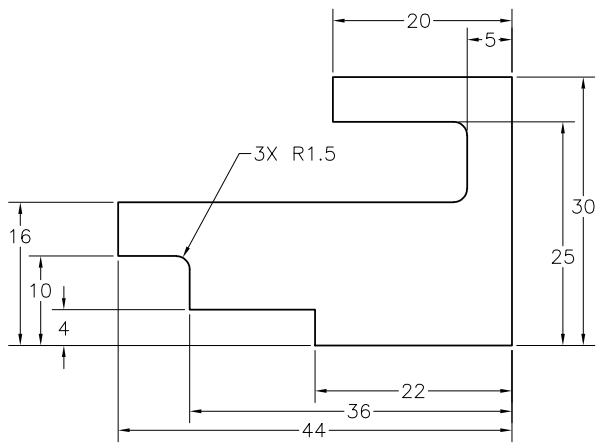

Figure 3-53 *Sketch for Tutorial 2*

Evaluation Copy. Do not reproduce. For information visit www.cadcim.com

The following steps are required to complete this tutorial:

a. Start a new metric standard part file.
b. Invoke the Sketching environment and draw the initial sketch by using the **Line** tool, refer to Figure 3-54.
c. Add **Linear Diameter** dimensions to the sketch by using the **Dimension** tool.
d. Apply **Coincident Constraint** between the origin and the lower left vertex of the sketch to make it a fully constrained sketch, refer to Figure 3-55.
e. Add fillets, save the sketch with the name *Tutorial2.ipt*, and then close the file.

Starting a New File and Invoking the Sketching Environment

1. Choose the **New** tool from the **Quick Access Toolbar** and start a new metric standard part file by using the **Metric** tab of the **Create New File** dialog box.

2. Choose the **Start 2D Sketch** tool from the **Sketch** panel of the **3D Model** tab; the default planes are displayed and you are prompted to select the sketching plane.

3. Choose the **Home** button from the ViewCube; the current orientation of the sketch plane is changed.

4. Select the **YZ** plane as the sketching plane from the graphics window; the Sketching environment is invoked and the **YZ** Plane becomes parallel to the screen. Alternatively you can select the **YZ** plane from the **Browser Bar**.



Tip. *Autodesk Inventor allows you to invoke the drawing display options even when a Sketching environment tool is active. This is done using a combination of hot keys and the left mouse button. For example, if the* ***Dimension*** *tool is active, you can use the* ***Pan*** *option by holding the F2 key and then pressing the left mouse button and dragging the cursor. Similarly, you can dynamically zoom in and out the sketch by holding the F3 key and then pressing the left mouse button and dragging the cursor.*

Drawing the Initial Sketch

1. Draw the initial sketch, as shown in Figure 3-54, using the **Line** tool. The lines in the sketch are numbered for your reference.

Dimensioning and Constraining the Sketch

The dimensions shown in Figure 3-53 are linear dimensions. As the sketch is for a revolved feature, you need to add linear diameter dimensions to it. It is recommended that you first apply all the dimensions and then add fillets to the sketch. This is because the size of a sketch generally changes after dimensioning. Before adding dimensions to a revolved section, it is important to determine which line segment of the sketch will act as the axis for revolving the sketch. If you refer to Figure 3-54, you will notice that line 1 acts as the axis to revolve the sketch for the model. Therefore, while applying linear diameter dimensions, line 1 should be selected first.

Evaluation Copy. Do not reproduce. For information visit www.cadcim.com

1. Choose the **Dimension** tool from the **Constrain** panel of the **Sketch** tab; you are prompted to select the geometry to be dimensioned. Right-click to display the Marking Menu, and then choose **Edit Dimension** from it, if it has not already been chosen. If it has already been chosen, press the ESC key once to exit the Marking Menu.

2. Select line 1; you are prompted again to select the geometry to be dimensioned. Select line 3 and then right-click; a Marking menu is displayed. From this menu, choose the **Linear Diameter** option.

   You will notice that the linear dimension is twice the actual length, which means that the distance between line 1 and line 3 is **4,** but will be displayed as **8** in the linear diameter dimension. Also, the dimension value is preceded by the Ø symbol, indicating that it is a linear diameter dimension.

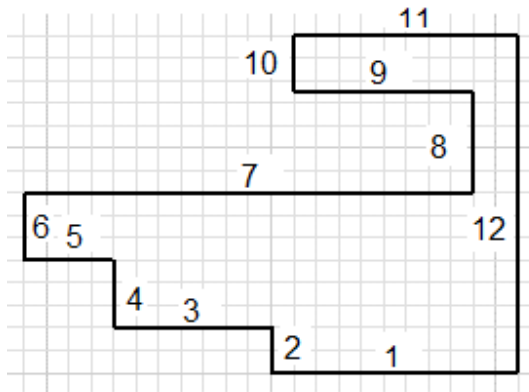

Figure 3-54 *Lines numbered in the sketch*

3. Place the dimension on the left of the sketch; the **Edit Dimension** toolbar is displayed.

   Figure 3-53 shows the value to be specified as **4** because the linear diameter dimensions are placed twice.

4. Enter **8** in the **Edit Dimension** toolbar and press ENTER; the vertical distance between lines 1 and 3 is automatically adjusted to the value entered.

5. As the **Dimension** tool is still active, you are prompted again to select the geometry to be dimensioned. Select lines 1 and 5 and then right-click; a Marking menu is displayed. Choose **Linear Diameter** from the Marking menu; the linear dimension is changed to the linear diameter dimension. Place the dimension on the left of the previous dimension. Next, modify its value in the **Edit Dimension** toolbar to **20** and press ENTER.

6. Select lines 1 and 7. Right-click to display the Marking menu, and then choose **Linear Diameter** from it. Place the dimension on the left of the previous dimension and change its dimension value in the **Edit Dimension** toolbar to **32**. Next, press ENTER.

Evaluation Copy. Do not reproduce. For information visit www.cadcim.com



Tip. *Sometimes while dimensioning a sketch, some existing dimensions move from the location where they have been placed. In this case, you need to exit the* ***Dimension*** *tool and then drag the existing dimensions back to their original locations. To resume dimensioning, invoke the* ***Dimension*** *tool again.*

7. Select lines 1 and 9, and then right-click; a Marking menu is displayed. In the Marking menu, choose **Linear Diameter**. Place the dimension on the right of the sketch and change its value in the **Edit Dimension** toolbar to **50** and then press ENTER.

8. Select lines 1 and 11, and then right-click to display the Marking menu. In this menu, choose **Linear Diameter**. Place the dimension on the right of the previous dimension and change its value in the **Edit Dimension** toolbar to **60** and then press ENTER.

   Now, you need to add linear dimensions to the sketch.

9. Select lines 12 and 8, and then place the dimension above the sketch. Modify its value in the **Edit Dimension** toolbar to **5** and press ENTER.

10. Select line 11 and then place the dimension above the previous dimension. Modify its value in the **Edit Dimension** toolbar to **20** and press ENTER.

11. Select line 1 and then place the dimension below the sketch. Modify its value in the **Edit Dimension** toolbar to **22** and press ENTER.

12. Select lines 12 and 4, and then place the dimension below the previous dimension. Modify its value in the **Edit Dimension** toolbar to **36** and press ENTER.

13. Select lines 12 and 6, and then place the dimension below the previous dimension. Modify its value in the **Edit Dimension** toolbar to **44** and press ENTER.

    With this, all dimensions have been added to the sketch. However, entities in the sketch are still displayed in green, indicating that the sketch is not fully constrained. Therefore, you need to add more dimensions or constraints to make the sketch fully constrained. In this sketch, add Coincident Constraint to the origin and the intersection point of lines 1 and 2.

14. Invoke the **Coincident Constraint** tool; you are prompted to select the first curve or point. Select the intersection point of lines 1 and 2, which is the lower left vertex of the sketch; you are prompted to select the second curve or point.



15. Next, select the origin; the entire sketch shifts from its original location and is relocated such that the lower left vertex of the sketch now lies at the origin. Also, all entities in the sketch are displayed in purple, indicating that the sketch is fully constrained.

Evaluation Copy. Do not reproduce. For information visit www.cadcim.com

Note

If the entities of the sketch are not fully constrained, you need to apply the Vertical Constraint to the vertical lines on the right of the sketch.

16. Choose the **Zoom All** tool from the **Navigation Bar > Zoom** flyout to fit the sketch into the drawing window. The fully constrained sketch after adding all the dimensions is shown in Figure 3-55.

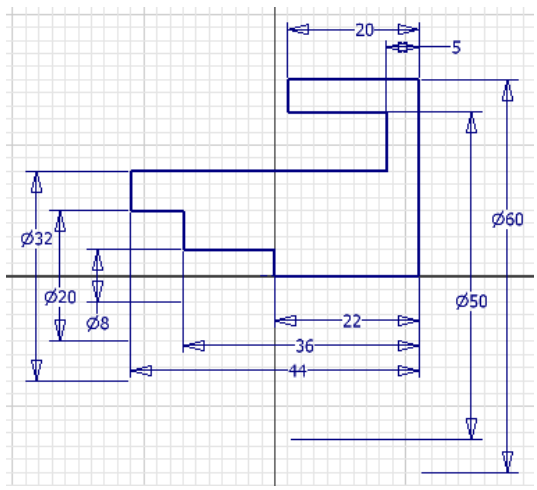

Figure 3-55 *Fully constrained sketch for Tutorial 2*

Adding Fillets to the Sketch

After dimensioning the sketch, you need to add fillets to it.

1. Choose the **Fillet** tool from **Sketch > Create > Fillet** drop-down; the **2D Fillet** dialog box is displayed. In this dialog box, set the value of fillet to **1.5**. Now, select lines 8 and 9; the fillet is automatically added between these two lines and the dimension of the fillet is displayed.

2. Similarly, select lines 4 and 5 as well as lines 7 and 8 to add fillets between these lines. Exit the **2D Fillet** dialog box. The final sketch after adding fillets is shown in Figure 3-56.

Evaluation Copy. Do not reproduce. For information visit www.cadcim.com

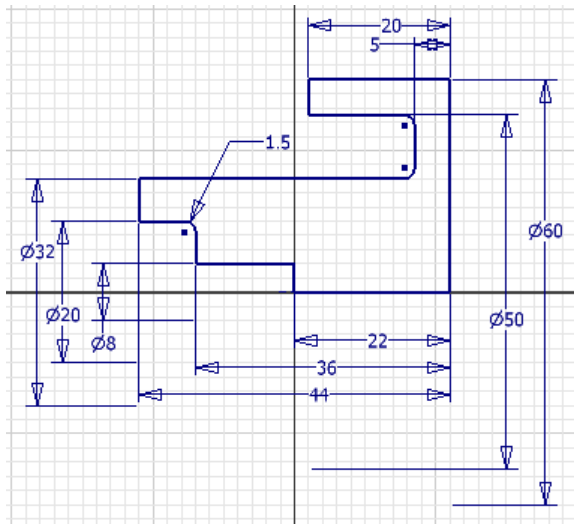

Figure 3-56 *Fully dimensioned sketch after adding fillets*

Note

To modify the radius of the fillet, double-click on it; the ***Edit Dimension*** *toolbar is displayed. Modify the value in this toolbar and press ENTER.*

Saving the Sketch

1. Choose the **Finish Sketch** button from the **Exit** panel of the **Sketch** tab to exit the sketching environment.

2. Save this sketch with the name *Tutorial2* at the location *C:\Inventor_2015/c03*.

3. Choose **Close > Close** from **Application Menu** to close the file.

Tutorial 3

In this tutorial, you will draw the sketch for the model shown in Figure 3-57. After drawing the sketch, you will add the required constraints to it and then dimension it. The dimensioned sketch required for this model is shown in Figure 3-58. The solid model shown in Figure 3-57 is only for reference.

The sketch shown in Figure 3-58 is the combination of multiple closed loops: the outer loop and inner circles. As the numbers of loops increase, so does the complexity of the sketch. This is because the numbers of constraints and dimensions in a sketch increase in case of multiple loops. Now, to draw sketches without using the Dynamic Input, it is recommended that you first draw the outer loop of the sketch and then add constraints and dimensions to it. This is because once the outer loop has been constrained and dimensioned, the inner circles can be constrained and dimensioned easily with reference to the outer loop.

(Expected time: 30 min)

Evaluation Copy. Do not reproduce. For information visit www.cadcim.com

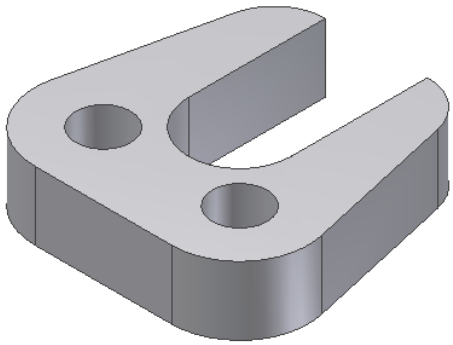

Figure 3-57 *Model for Tutorial 3*

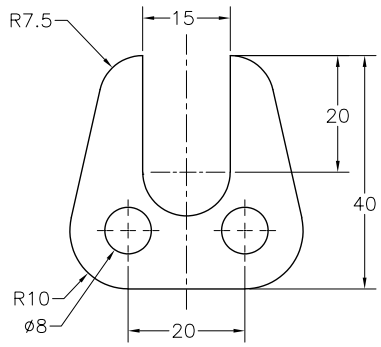

Figure 3-58 *Dimensioned sketch of the model*

The following steps are required to complete this tutorial:

a. Start a new metric template and draw the outer loop of the sketch, refer to Figure 3-59.
b. Invoke the Sketching environment and add the required dimensions and constraints to the outer loop, refer to Figure 3-61.
c. Draw inner circles and add constraints and dimensions to them, refer to Figure 3-62.
d. Save the sketch with the name *Tutorial3.ipt* and close the file.

Starting a New File and Invoking the Sketching Environment

1. Choose the **New** button from the **Quick Access Toolbar** and start a new metric standard part file using the **Metric** tab of the **Create New File** dialog box.

2. Choose the **Start 2D Sketch** button from the **Sketch** panel of the **3D Model** tab; the default planes are displayed and you are prompted to select the sketching plane.

3. Choose the **Home** button from the ViewCube; the current orientation of the sketch plane is changed.

4. Select the **XZ** plane as the sketching plane from the graphics window; the Sketching environment is invoked and the **XZ** Plane becomes parallel to the screen.

Drawing the Outer Loop

1. To draw the outer loop, invoke the **Line** tool from the **Draw** panel in the **Sketch** tab, refer to Figure 3-59.

Evaluation Copy. Do not reproduce. For information visit www.cadcim.com

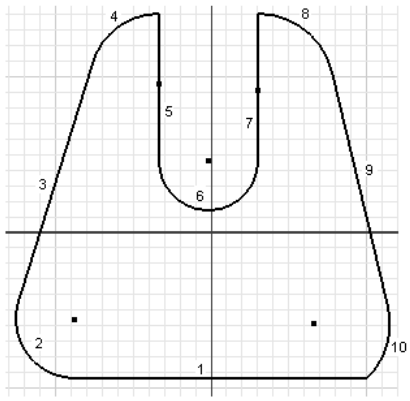

Figure 3-59 *Profile with geometries numbered*

You can also draw the tangent arcs while using the **Line** tool. This can be done by invoking the **Line** tool and by pressing the left mouse button and then dragging it in the required direction. Move the cursor close to the endpoint of the last line until the yellow circle snaps to that point. When the yellow circle snaps to the endpoint, it turns gray. Next, press and hold the left mouse button and drag the mouse through a small distance in the upward direction. Refer to Tutorial 3 of Chapter 2 to learn more about drawing this type of arc.

For your reference, all the geometries in the sketch are numbered. You will draw inner holes in the sketch after dimensioning the outer loop.

Note

The outer loop that you created in the previous step might be different from the one shown in Figure 3-59. You can find the missing constraints by following the next step and applying constraints accordingly.

Adding Constraints to Sketched Entities

As evident from Figure 3-59, some of the constraints such as tangent and equal are missing in the sketch. The sketch shown in Figure 3-59 may not be symmetrical and all the lines in the sketch may not be tangent to the arcs. Therefore, you need to add these missing constraints manually to the sketch to complete it. You can choose the **Show Constraint** option from the Marking menu that is displayed when you right-click on an entity.

1. In Figure 3-59, the **Tangent** constraint is missing between line 1 and arc 10. To add this constraint between the line and the arc, choose the **Tangent** tool from the **Constrain** panel of the **Sketch** tab; you are prompted to select the first curve. Select arc 10 as the first curve; you are prompted to select the second curve. Select line 1 as the second curve. Similarly, add this constraint to all the places in the sketch wherever it is missing.

   The geometries 5 and 7, and 3 and 9 are the lines that must be of equal length. Also, the geometries 2 and 10, and 4 and 8 are the arcs that must be of equal radii. Therefore, you need to add the Equal constraint between the respective pairs of all these geometries.

Evaluation Copy. Do not reproduce. For information visit www.cadcim.com

2. Choose the **Equal** tool from the **Constrain** panel of the **Sketch** tab.

3. Select line 5 as the first line and then line 7 as the second line to apply the Equal constraint to them; you are prompted again to select the first entity.

4. Select line 3 and then line 9 to apply the **Equal** constraint to them; you are prompted to select the first entity again.

5. Select arc 2 and then arc 10 to apply the **Equal** constraint to them. Applying this constraint to arcs or circles forces their radii or diameters to be equal.

6. Similarly, apply the **Equal** constraint to arc 4 and arc 8.

7. Apply the **Coincident Constraint** between the center point of arc 4 and line 5, and the center point of arc 8 and line 7, if it is not applied automatically.

8. Choose the **Coincident Constraint** tool from the **Constrain** panel; you are prompted to select the first curve or point.

9. Select the origin; you are prompted to select the second curve or point.

10. Select the center point of arc 6; the entire sketch moves to make the origin coincident with the center point of the arc. The sketch after applying all the constraints is shown in Figure 3-60.

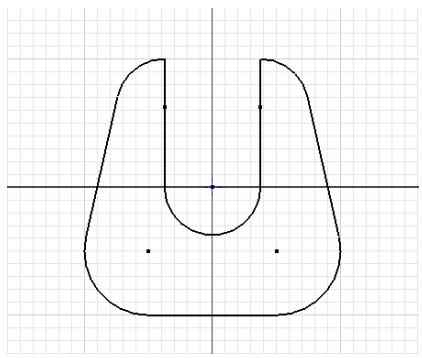

Figure 3-60 *The sketch after applying all constraints*



Note

The shape of the sketch that you have drawn may be a little different from the final sketch at this stage because of the difference in specifying points while drawing the sketch. However, once all the dimensions are applied, the shape of the sketch will be the same as of the final sketch. Also, you may need to add vertical constraint to lines 5 and 7 and horizontal constraint to line 1 to fully constrain the sketch.

Evaluation Copy. Do not reproduce. For information visit www.cadcim.com

Dimensioning the Sketch

1. Choose the **Dimension** tool from the **Constrain** panel of the **Sketch** tab. Next, right-click to display the Marking menu. From the Marking menu, choose **Edit Dimension** if the check mark is not available on the left of the **Edit Dimension** option. If it shows the check mark, press the ESC key once to exit the Marking Menu. On doing so, you are prompted to select the geometry to be dimensioned. Select line 1 and place the dimension below the sketch. Modify the value of this dimension in the **Edit Dimension** toolbar to **20**.

2. Select arc 4 and place the dimension on the left of the sketch; the radius dimension of the sketch is placed. Modify the dimension value in the **Edit Dimension** toolbar to **7.5**. The size of arc 8 is also modified because of the **Equal** constraint applied between these two entities.



Note

As discussed in the previous tutorial, you may need to use the combination of hot keys to zoom or pan the model.

3. Select arc 2 and place the radius dimension on the left of the sketch. Modify the dimension value in the **Edit Dimension** toolbar to **10** and press ENTER. The size of arc 10 is also modified because of the **Equal** constraint applied between these two entities.

4. Select line 5 and then line 7, and then place the dimension above the sketch. Modify the value of this dimension in the **Edit Dimension** toolbar to **15** and press ENTER.

5. Select line 7 and place the dimension on the right of the sketch. Modify the value of this dimension in the **Edit Dimension** toolbar to **20** and press ENTER.

6. Select the upper endpoint of line 7 and select line 1, and then place the dimension on the right of the previous dimension. Modify the value of this dimension to **40** and press ENTER. Next, exit the **Dimension** tool.

   With this, all the dimensions have been applied to the sketch, refer to Figure 3-61, except the horizontal dimension between the center points of arcs 4 and 6 or arcs 8 and 6. The need of these dimensions depends on the constraints and dimensions assumed while drawing the sketch. If the sketch gets over-constrained, the **Autodesk Inventor Professional** message box is displayed. Choose **Cancel** from the message box. In this case, the dimension has already been assumed.

Drawing Circles

Once all the required dimensions and constraints have been applied to the sketch, you need to draw circles. Figure 3-58 indicates that circles are concentric with arcs 2 and 10.

1. To draw concentric circles, choose the **Center Point Circle** tool from the **Create** panel; you are prompted to select the center of the circle. Move the cursor close to the center of arc 2. Specify the center point when the cursor snaps to the center point of arc 2 and turns green. Next, move the cursor away from the center and specify a point to size the circle.

Evaluation Copy. Do not reproduce. For information visit www.cadcim.com

2. Similarly, draw the other circle taking the reference of the center of arc 10.

Adding Constraints to Circles

As both the circles have the same diameter, you can apply the **Equal** constraint to them. On applying the dimension to one of the circles, the other circle will automatically be forced to the specified diameter value because of the **Equal** constraint.

1. Invoke the **Equal** constraint from the **Constrain** panel. Select the first circle and then the second circle to apply the **Equal** constraint.

Dimensioning Circles

1. Choose the **Dimension** tool from the **Constrain** panel and select the left circle. Place the dimension on the left of the sketch. In the **Edit Dimension** toolbar, change the value of the diameter of the circle to **8** and press ENTER.



Notice that because of the **Equal** constraint, the size of the right circle is automatically modified to match the dimension of the left circle. The final sketch for Tutorial 3 after drawing and dimensioning circles is shown in Figure 3-62.

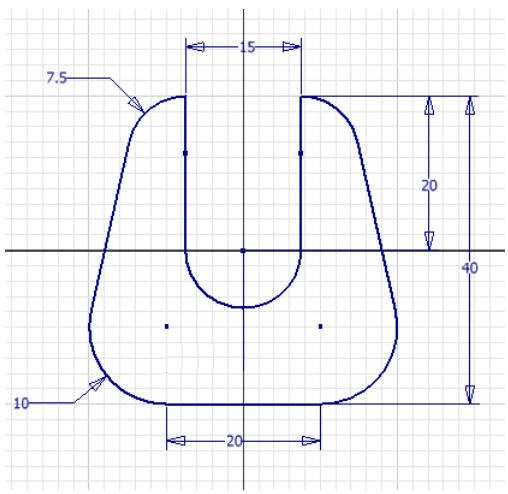

Figure 3-61 *Dimensioned sketch for Tutorial 3*

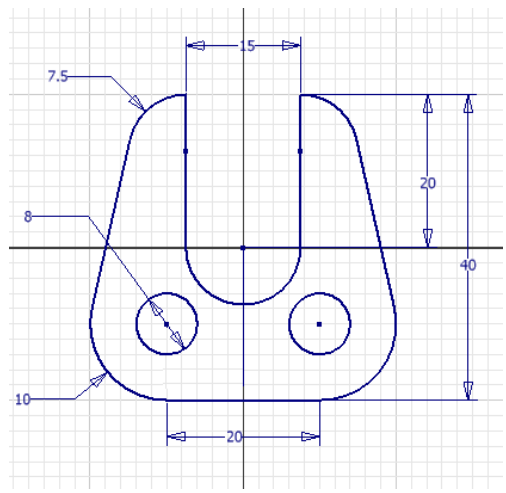

Figure 3-62 *The final dimensioned sketch for Tutorial 3*

Saving the Sketch

1. Choose the **Return** tool from the **Quick Access Toolbar** to exit the sketching environment. Save this sketch with the name *Tutorial3* at the location given below:



C:\Inventor_2015/c03

Evaluation Copy. Do not reproduce. For information visit www.cadcim.com



Note

*If the **Return** tool is not available in **Quick Access Toolbar**, you need to add this tool to the toolbar. To do so, choose the down arrow on the right of **Quick Access Toolbar**; a flyout is displayed. Next, choose the **Return** option from the flyout.*

2. Choose **Close > Close** from the **Application Menu** to close the file.

Tutorial 4

In this tutorial, you will draw the sketch of the model shown in Figure 3-63. The dimensions of the sketch are shown in Figure 3-64. After drawing the sketch, add constraints, and then dimension it. The solid model is given for reference only. **(Expected time: 30 min)**

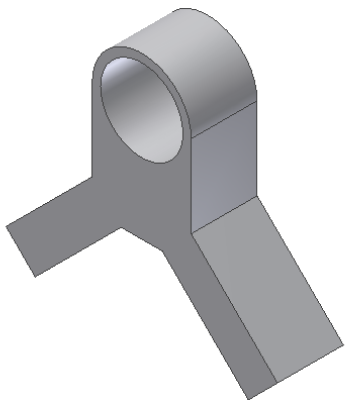

Figure 3-63 *Model for the sketch of Tutorial 4*

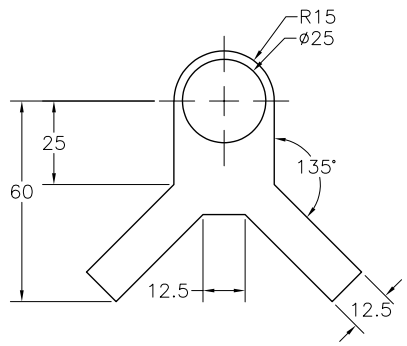

Figure 3-64 *The final dimensioned sketch for Tutorial 4*

The following steps are required to complete this tutorial:

a. Start a new metric standard part file and invoke the Sketching environment.
b. Draw the outer loop of the sketch.
c. Add the required dimensions and constraints to the sketch.
d. Add the inner circle to the sketch and dimension it.
e. Save the sketch with the name *Tutorial4.ipt* and close the file.

Starting a New File and Invoking the Sketching Environment

1. Choose the **New** tool from the **Quick Access Toolbar** to display the **Create New File** dialog box. Start a new metric standard part file from the **Metric** tab of this dialog box.

2. Choose the **Start 2D Sketch** tool from the **Sketch** panel of the **3D Model** tab; the default planes are displayed and you are prompted to select the sketching plane.

3. Choose the **Home** button from the ViewCube; the current orientation of the sketch plane is changed.

Evaluation Copy. Do not reproduce. For information visit www.cadcim.com

4. Select the **XY** plane as the sketching plane from the graphics window; the Sketching environment is invoked and the **XY** Plane becomes parallel to the screen. Alternatively, you can select **XY** plane from the **Browser Bar**.

Drawing the Outer Loop

1. Choose the **Line** tool from the **Create** panel of the **Sketch** tab to draw the outer loop, as shown in Figure 3-65. As mentioned earlier, you should draw the inner loop after drawing and dimensioning the outer loop. This is because once the outer loop is dimensioned, you can draw the inner loop by taking the reference of the outer loop.

   You can draw the arc while the **Line** tool is active. You can also use the temporary tracking option to draw this sketch. For your reference, the geometries in the sketch are numbered, see Figure 3-65.

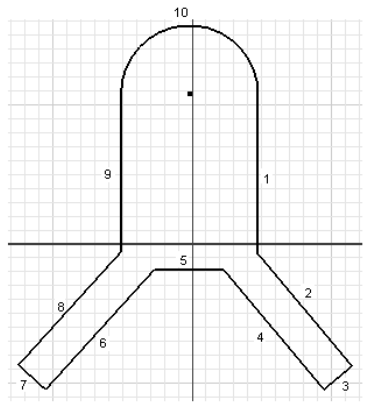

Figure 3-65 *Initial sketch with the geometries numbered*

Adding Constraints to the Outer Loop

1. Add the **Equal** constraint to lines 1 and 9, 2 and 8, 3 and 5, 5 and 7, and 4 and 6.

2. Add the **Perpendicular** Constraint to lines 2 and 3, and 7 and 8.

3. Add the **Horizontal** Constraint to the lower endpoints of lines 4 and 6.

4. Add the **Tangent** Constraint to lines 1 and 9 with arc 10, if it is missing.

Dimensioning the Outer Loop

1. Choose the **Dimension** tool from the **Constrain** panel of the **Sketch** tab; you are prompted to select the geometry to dimension. Select line 9 and place the dimension on the left of the sketch. Modify the dimension value in the **Edit Dimension** toolbar to **25** and press ENTER.



2. Select the center of the arc and then the lower endpoint of line 6. Place the dimension on the left of the previous dimension. Modify the dimension value in the **Edit Dimension** toolbar to **60** and press ENTER.

Evaluation Copy. Do not reproduce. For information visit www.cadcim.com

3. Select line 3 and then right-click to display the Marking menu. Choose **Aligned** from the Marking menu and then place the dimension below the sketch. Modify the dimension value in the **Edit Dimension** toolbar to **12.5** and press ENTER.

   Notice that the length of lines 5 and 7 is also modified because of the **Equal** constraint.

4. Select lines 1 and 2 and then place the angular dimension on the right of the sketch. Modify the value of the angular dimension in the **Edit Dimension** toolbar to **135** and press ENTER.

5. Select arc 10 and then place the radius dimension above the sketch. Modify the value of the radius of the arc in the **Edit Dimension** toolbar to **15** and press ENTER.

   With this, the required dimensions have been applied to the outer loop. Even after adding all dimensions, the color of entities in the sketch remains green.

6. Select the origin. Now, you can use the origin to fully constrain the initial sketch.

7. Choose the **Coincident Constraint** tool from the **Constrain** panel; you are prompted to select the first curve or point.

8. Select the center of the arc; you are prompted to select the second curve or point.

9. Select the origin. The entire sketch shifts itself such that the center of arc of the sketch is at the origin. After the sketch is shifted to a new place, it may not be visible completely in the drawing window.

10. Choose the **Zoom All** tool from the **Navigation Bar > Zoom** flyout to fit the sketch into the drawing window. You will notice that all the entities in the sketch turn purple, indicating that the sketch is fully constrained. Press the ESC key to exit the **Coincident Constraint** tool.

Drawing the Circle

1. Choose **Center Point Circle** from the **Create** panel of the **Sketch** tab; you are prompted to select the center of the circle.

2. Move the cursor close to the center of the arc; the cursor snaps to the center point and turns green. Select this point as the center of the circle and then move the cursor away from the center to size the circle. Specify a point to give it an approximate size.

Dimensioning the Circle

1. Choose **Dimension** from the **Constrain** panel of the **Sketch** tab and select the circle. Place the diameter dimension below the arc dimension. Enter **25** in the **Edit Dimension** toolbar and then press ENTER. This completes the sketch for Tutorial 4. The final dimensioned sketch is shown in Figure 3-66.

Evaluation Copy. Do not reproduce. For information visit www.cadcim.com

Saving the Sketch

1. Choose the **Finish Sketch** option from the **Exit** panel of the **Sketch** tab to exit the sketching environment. Alternatively, choose the **Finish 2D Sketch** option from the Marking menu to exit the sketching environment

2. Save the sketch with the name *Tutorial4* at the location given below:

   C:\Inventor_2015\c03

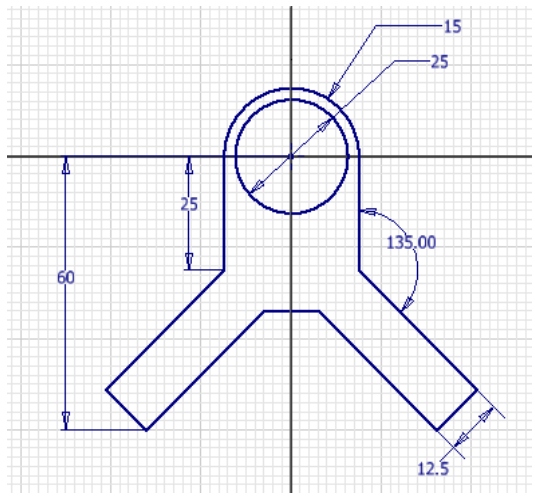

Figure 3-66 *The final dimensioned sketch for Tutorial 4*

3. Choose **Close > Close** from **Application Menu** to close the file.

Self-Evaluation Test

Answer the following questions and then compare them to those given at the end of this chapter:

1. The **Perpendicular Constraint** forces a selected entity to become perpendicular to a specified entity. (T/F)

2. The **Coincident Constraint** can be applied to two line segments. (T/F)

3. The **Collinear Constraint** can only be applied to line segments. (T/F)

4. If an unnecessary constraint is applied to a sketch, Autodesk Inventor displays a message box informing that adding this constraint will over-constrain the sketch. (T/F)

5. The _____ nature of Autodesk Inventor ensures that a selected entity is driven to a specified dimension value irrespective of its original size.

6. When you select a circle to be dimensioned, the _____ dimension is applied to it, by default.

Evaluation Copy. Do not reproduce. For information visit www.cadcim.com

7. The _____ dimension has one arrowhead and is placed outside a circle or an arc.

8. The _____ dimension displays the distance between two selected line segments in terms of diameter and the distance shown is twice the original length.

9. The _____ tool is used to measure the radius of an arc.

10. A _____ constrained sketch is the one whose entities are completely constrained to their surroundings using constraints and dimensions.

Review Questions

Answer the following questions:

1. You cannot apply the **Concentric Constraint** between a point and a circle. (T/F)

2. You can use the **Horizontal Constraint** or the **Vertical Constraint** to line up arcs, circles, or ellipses in the same horizontal or vertical direction. (T/F)

3. You can view all or some of the constraints applied to a sketch. (T/F)

4. There are twelve types of geometrical constraints that can be applied to the sketched entities. (T/F)

5. The linear dimensions are the dimensions that define the shortest distance between two points. (T/F)

6. A sketch in which the number of dimensions or constraints exceeds the required numbers is called as Over-constrained. (T/F)

7. To which of the following toolbars does the **Measure Distance** toolbar change when you invoke the **Distance** tool and select two lines?

   (a) **Length** (b) **Distance**
   (c) **Minimum Distance** (d) None of these

8. Which of the following dimensions is by default applied to an arc whenever it to dimension?

   (a) **Radius** (b) **Diameter**
   (c) **Linear** (d) **Linear Diameter**

9. In addition to lines, which of the following entities can be selected to apply the **Collinear** constraint?

   (a) Arc (b) Circle
   (c) Ellipse (d) Ellipse axis

Evaluation Copy. Do not reproduce. For information visit www.cadcim.com

10. Which of the following combinations of entities cannot be used to apply the **Tangent** constraint?

(a) Line, line (b) Line, arc
(c) Circle, circle (d) Arc, circle

Exercises

Exercise 1

Draw the sketch of the model shown in Figure 3-67. The sketch to be drawn is shown in Figure 3-68. After drawing the sketch, add the required constraints to it and then dimension it. **(Expected time: 30 min)**

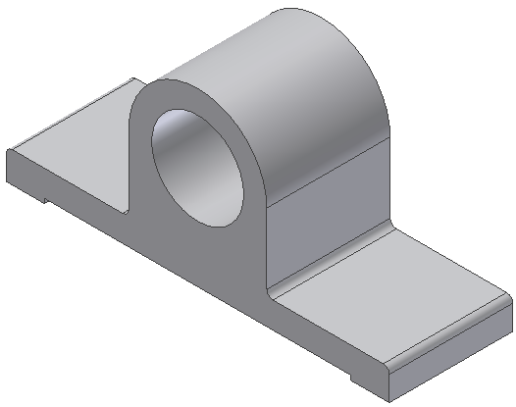

Figure 3-67 *Model for Exercise 1*

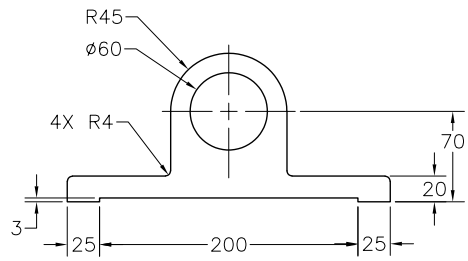

Figure 3-68 *Sketch for Exercise 1*

Exercise 2

Draw the sketch of the model shown in Figure 3-69. The sketch to be drawn is shown in Figure 3-70. After drawing the sketch, add the required constraints to it and then dimension it. **(Expected time: 30 min)**

Evaluation Copy. Do not reproduce. For information visit www.cadcim.com

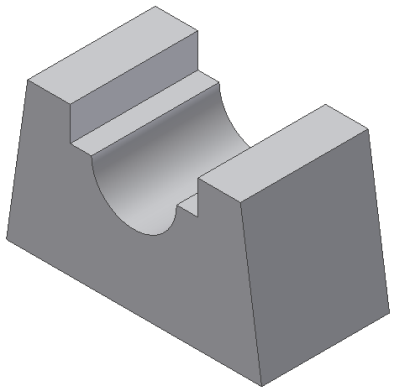

Figure 3-69 *Model for Exercise 2*

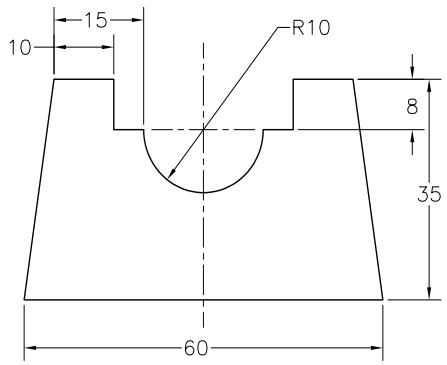

Figure 3-70 *Sketch for Exercise 2*

Exercise 3

Redraw the sketch of Exercise 1 of Chapter 2. After drawing the sketch, add the required constraints to it and then dimension it. The dimensioned sketch is shown in Figure 3-71.

(Expected time: 30 min)

Exercise 4

Redraw the sketch of Exercise 2 of Chapter 2. After drawing the sketch, add the required constraints to it and then dimension it. The dimensioned sketch is shown in Figure 3-72.

(Expected time: 30 min)

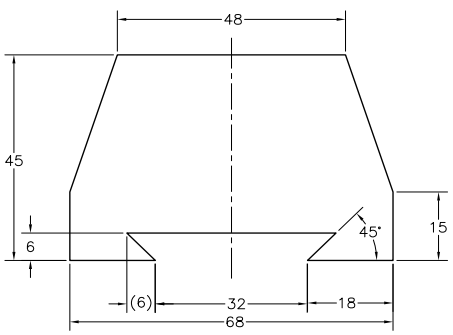

Figure 3-71 *Dimensioned sketch for Exercise 3*

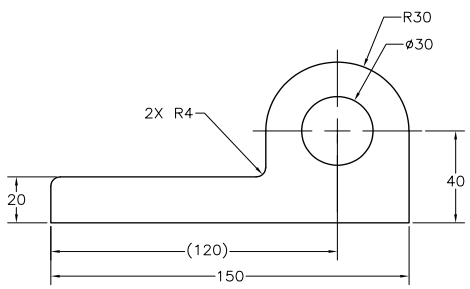

Figure 3-72 *Dimensioned sketch for Exercise 4*

Evaluation Copy. Do not reproduce. For information visit www.cadcim.com

Exercise 5

Draw the sketch of the model shown in Figure 3-73. The sketch to be drawn is shown in Figure 3-74. After drawing the sketch, add the required constraints to it and then dimension it.

(Expected time: 30 min)

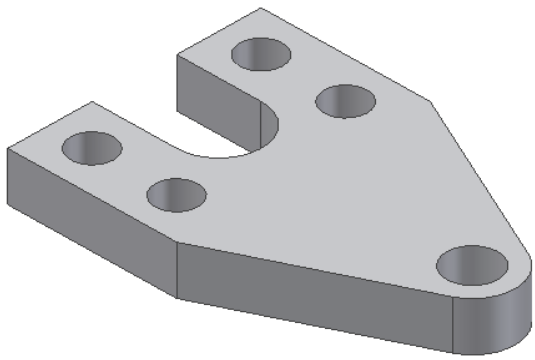

Figure 3-73 *Model for Exercise 5*

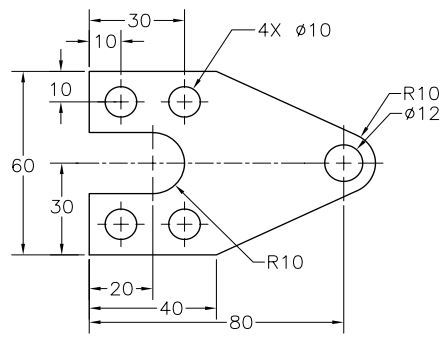

Figure 3-74 *Sketch for Exercise 5*

Exercise 6

Draw the sketch of the model shown in Figure 3-75. The sketch to be drawn is shown in Figure 3-76. After drawing the sketch, add the required constraints to it and then dimension it.

(Expected time: 30 min)

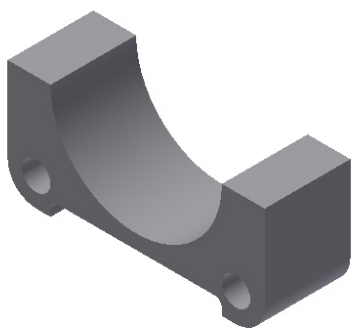

Figure 3-75 *Model for Exercise 6*

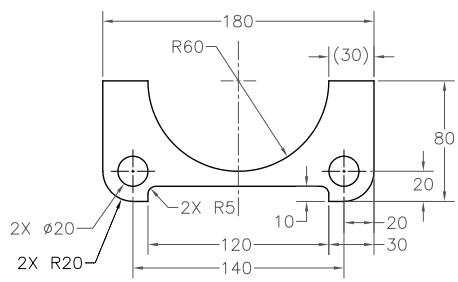

Figure 3-76 *Sketch for Exercise 6*

Evaluation Copy. Do not reproduce. For information visit www.cadcim.com

Answers to Self-Evaluation Test

1. T, **2.** F, **3.** F, **4.** T, **5.** parametric, **6.** diameter, **7.** radius, **8.** linear diameter, **9. Measure Distance**, **10.** fully

Evaluation Copy. Do not reproduce. For information visit www.cadcim.com