Chapter 3

Editing and Modifying Sketches



Learning Objectives

After completing this chapter, you will be able to:

- *Edit sketches using various editing tools.*
- *Create rectangular patterns of sketched entities.*
- *Create circular patterns of sketched entities.*
- *Write text in the sketching environment.*
- *Modify sketched entities.*
- *Modify sketches by dynamically dragging sketched entities.*

EDITING SKETCHED ENTITIES

In SolidWorks, there are various tools that can be used to edit the sketched entities. These tools are used to trim, extend, offset, or mirror the sketched entities. You can also perform various other editing operations by using these tools. Various editing operations and the tools used to perform them are discussed next.

Trimming Sketched Entities

CommandManager:	Sketch > Trim Entities
SolidWorks menus:	Tools > Sketch Tools > Trim
Toolbar:	Sketch > Trim Entities



The **Trim Entities** tool is used to trim the unwanted entities in a sketch. You can use this tool to trim a line, arc, ellipse, parabola, circle, spline, or centerline intersecting another line, arc, ellipse, parabola, circle, spline, or centerline. You can also extend the sketched entities using the **Trim Entities** tool. To trim an entity, choose the **Trim Entities** button from the **Sketch CommandManager**; the **Trim PropertyManager** will be displayed, as shown in Figure 3-1.

The options in this PropertyManager to trim the sketched entities are discussed next.

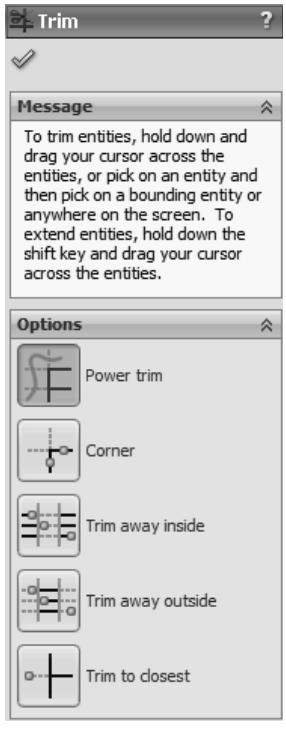

Figure 3-1** The **Trim PropertyManager

Message Rollout

The **Message** rollout in this PropertyManager informs you about the procedure of trimming and extending the sketched elements, depending upon the option selected in the **Options** rollout of the **Trim PropertyManager**.

Options Rollout

The **Options** rollout displays all options that are used to trim the sketched entities. These options are discussed next.

Power trim

When the **Power trim** button is chosen in the **Options** rollout, the **Message** rollout in this PropertyManager will inform you about the procedure of trimming and extending the sketched elements using this option. To trim the unwanted portion of a sketch using this option, press and hold the left mouse button and drag the cursor. You will notice that a gray-colored drag trace line is displayed along the path of the cursor. When you drag the cursor across the unwanted sketched entity, it will be trimmed and a small red-colored box will be displayed in its place. You can continue trimming the entities by dragging the cursor across them. After trimming all unwanted entities, release the left mouse button.

Evaluation Copy. Do not reproduce. For information visit www.cadcim.com

To extend or shorten an entity dynamically using this tool, click once on the entity and then move the cursor; the entity will extend or shorten dynamically depending upon the direction of movement. Move the cursor up to a level to which the entity has to be extended or shortened. Press the left mouse button to complete the operation.

To extend a line or a curve such that it intersects with other entity, select the first entity and then select the second entity; the first entity will extend and intersect the second entity. While extending, if the first entity cannot intersect the second entity, then the first entity will extend up to the apparent intersection point.



Note

If the first entity cannot be extended to intersect the second entity, then a tooltip will inform you about it.

Corner

The **Corner** button in the **Options** rollout is used to trim or extend the sketched entities in such a way that the resulting entities form a corner. To trim the unwanted elements using this option, choose the **Corner** button from the **Options** rollout; you will be prompted to select an entity. Select the entity from the geometry area; you will be prompted to select another entity. When you move the cursor over the second entity, the preview of the resulting entity will be displayed in a different color. In the second entity, select the portion to be retained, as shown in Figure 3-2. The selected portions of the entities will be retained and the resulting entities will form a corner, as shown in Figure 3-3.

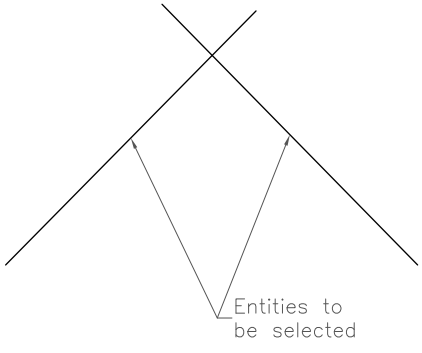

Figure 3-2 *Entities to be selected for trimming*

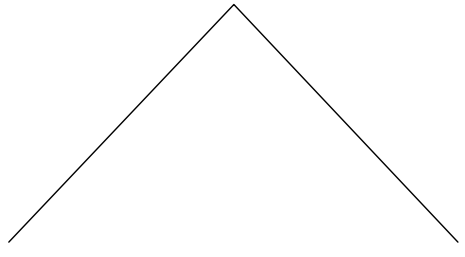

Figure 3-3 *Entities after trimming*

You can also extend the entities using this tool. To do so, choose the **Corner** button from the **Options** rollout. Select the entities to be extended; the selected entities will be extended to their apparent intersection, refer to Figures 3-4 and 3-5.

Trim away inside

The **Trim away inside** button in the **Options** rollout is used to trim the portion of a selected entity that lies inside two bounding entities. To trim the sketched entities using this tool, invoke the **Trim PropertyManager** and choose the **Trim away inside** button from the **Options** rollout; the **Message** rollout will be displayed informing you to select the

Evaluation Copy. Do not reproduce. For information visit www.cadcim.com

two bounding entities, and then to select the entities to be trimmed. Select the bounding entities from the drawing area, refer to Figure 3-6. Now, select the entities to be trimmed from the drawing area. As you select an entity to be trimmed, the portion of the entity inside the bounding entities will be removed and the portion outside the bounding entities will be retained, refer to Figure 3-6.

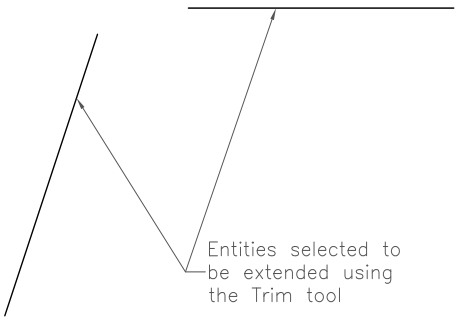

Figure 3-4 *Entities selected to extend*

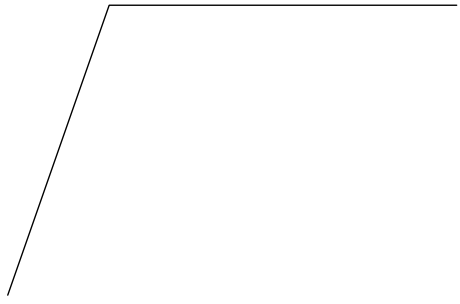

Figure 3-5 *Sketch after extension*

Trim away outside

The **Trim away outside** button in the **Options** rollout is used to trim the portion of an entity outside the bounding entities. To trim the entities using this tool, invoke the **Trim PropertyManager** and choose the **Trim away outside** button from the **Options** rollout; the **Message** rollout will inform you to select the two bounding entities, and then to select the entities to be trimmed. Select the bounding entities from the drawing area, refer to Figure 3-7. Now, select the entities to be trimmed from the drawing area. As soon as you select an entity to be trimmed, the portion of the entity outside the bounding entities will be removed and the portion inside will be retained, refer to Figure 3-7.

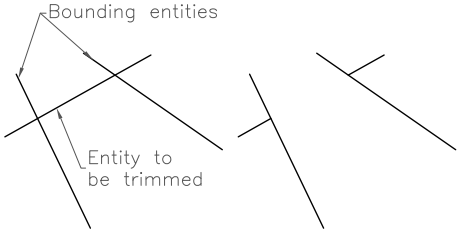

Figure 3-6 *Entity trimmed using the* ***Trim away inside*** *button*

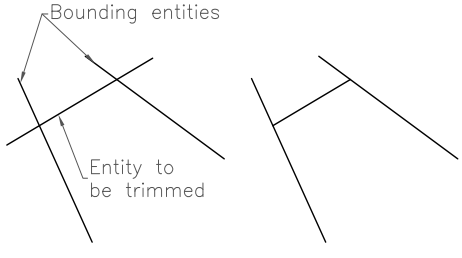

Figure 3-7 *Entity trimmed using the* ***Trim away outside*** *button*

Trim to closest

The **Trim to closest** button is used to trim the selected entity to its closest intersection. To trim the entities using this tool, invoke the **Trim PropertyManager** and then choose the **Trim to closest** button from the **Options** rollout; the cursor will be replaced by the trim cursor. Move the trim cursor near the portion of the sketched entity to be removed. The entity or the portion of the entity to be removed will be highlighted in orange. Press

Evaluation Copy. Do not reproduce. For information visit www.cadcim.com

the left mouse button to remove the highlighted entity. Figure 3-8 shows the entities to be trimmed and Figure 3-9 shows the sketch after trimming the entities.

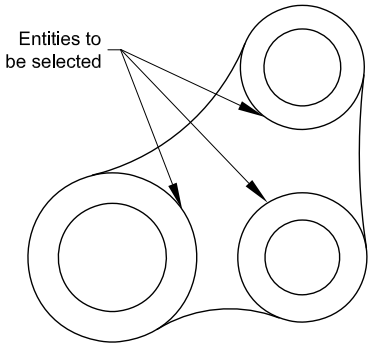

Figure 3-8 *Entities to be trimmed*

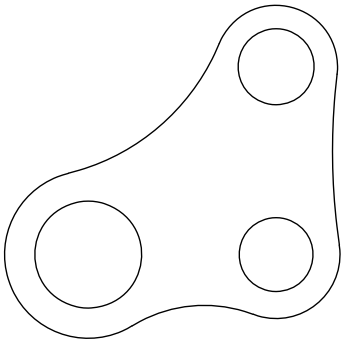

Figure 3-9 *Sketch after trimming the entities*

You can also use this option to extend the sketched entities. To do so, move the trim cursor to the entity to be extended. When the sketched entity turns orange, press the left mouse button and drag the cursor to the entity up to which it has to be extended. You will notice the preview of the extended entity. Release the left mouse button when the preview of the extended entity appears; the entity will be extended.



Tip. *You can toggle between the* ***Trim Entities*** *and* ***Extend Entities*** *tools using the shortcut menu that will be displayed on right-clicking when any one of these tools is active.*

Extending Sketched Entities

CommandManager:	Sketch > Trim Entities flyout > Extend Entities
SolidWorks menus:	Tools > Sketch Tools > Extend
Toolbar:	Sketch > Trim Entities flyout > Extend Entities



The **Extend Entities** tool is used to extend the sketched entity to intersect the next available entity. The tool is used to extend a line, arc, ellipse, parabola, circle, spline, or centerline to intersect another line, arc, ellipse, parabola, circle, spline, or centerline. The sketched entity is extended up to its intersection with another sketched entity or a model edge. To do so, choose the **Extend Entities** button from the **Trim Entities** flyout in the **Sketch CommandManager**, as shown in Figure 3-10 and move the extend cursor close to the portion of the sketched entity that is to be extended. The entity to be extended will be highlighted and the preview of the extended entity will also be displayed. Press the left mouse button to complete the extend operation. Figure 3-11 shows the sketched entities to be extended and Figure 3-12 shows the sketched entities after extension.

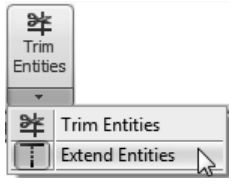

Figure 3-10 *Tools in the* ***Trim Entities*** *flyout*



Tip. *If the preview of the sketched entity to be extended is shown in the wrong direction, move the extend cursor to a position on the other half of the entity and observe the new preview.*

Evaluation Copy. Do not reproduce. For information visit www.cadcim.com

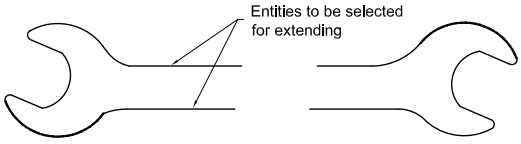

Figure 3-11 *Sketched entities to be extended*

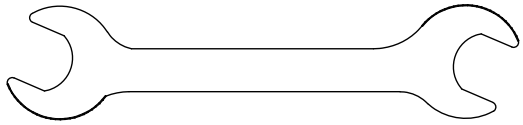

Figure 3-12 *Sketched entities after extension*

Filleting Sketched Entities

CommandManager:	Sketch > Sketch Fillet
SolidWorks menus:	Tools > Sketch Tools > Fillet
Toolbar:	Sketch > Sketch Fillet



A fillet creates a tangent arc at the intersection of two sketched entities. It trims or extends the entities to be filleted, depending on the geometry of the sketched entity. You can apply a fillet to two nonparallel lines, two arcs, two splines, an arc and a line, a spline and a line, or a spline and an arc. A fillet between two arcs, or between an arc and a line depends on the compatibility of the geometry to be extended or filleted along the given radius. You can first choose the **Sketch Fillet** tool from the **Sketch CommandManager**, and then select the entities to be filleted or select the vertex formed at the intersection of the two entities to be filleted. Alternatively, you can hold the CTRL key and select the two entities to be filleted and then invoke this tool.

When you invoke the **Sketch Fillet** tool, the **Sketch Fillet PropertyManager** will be displayed, as shown in Figure 3-13. Next, select the entities; the preview of the fillet with default radius will be displayed. You can drag the fillet preview to resize it to the required radius or set the radius in the **Fillet Radius** spinner and press ENTER; a fillet will be created and the **Sketch Fillet PropertyManager** will be displayed even after applying a fillet. This enables you to create multiple fillets in a sketch. If you create multiple fillets of different radii, then all fillets need to be dimensioned individually. To do so, select the **Dimension each fillet** check box. But if you need to create multiple fillets of same dimension, then it is recommended that this check box should be cleared. If the **Keep constrained corners** check box is selected, the dimension and geometric relations applied to the sketch will not be deleted. If you clear the **Keep constrained corners** check box, you will be prompted to delete the relations applied to the corners of the sketched entities to be filleted. Choose the **OK** button to exit the **Sketch Fillet PropertyManager**.



Figure 3-13 *The **Sketch Fillet PropertyManager***

Figure 3-14 shows the intersecting entities before and after applying the fillet. You can also select the non-intersecting entities for creating a fillet. In this case, the selected entities will be extended to form a fillet, as shown in Figure 3-15.

Evaluation Copy. Do not reproduce. For information visit www.cadcim.com

Note

If the sketch entities are having the geometric relations applied, then a ***SolidWorks*** *message box will be displayed showing the message:* ***The corner to be filleted has geometric relations which will be deleted if the filled is created. Do you want to continue?****. Choose the* ***Yes*** *button from it, the fillet will be created.*

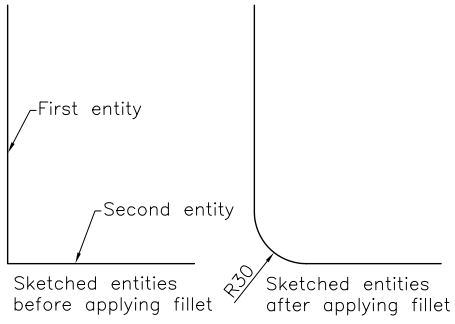

Figure 3-14 *Intersecting entities before and after applying a fillet*

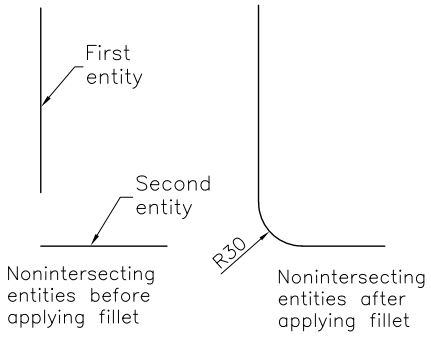

Figure 3-15 *Non-intersecting entities before and after applying a fillet*

Tip. *You can also create a fillet between two entities by drawing a window around them after invoking the* ***Sketch Fillet*** *tool. To fillet the entities using this method, invoke the* ***Sketch Fillet*** *tool. Set the* ***Radius*** *spinner to the required value. Now, drag the cursor to create a window around the two entities to be filleted such that they are enclosed inside the window; preview of the fillet will be displayed. Choose the* ***OK*** *button; the fillet will be created.*

Note

The consecutive fillets with the same radius are not dimensioned individually. An automatic equal radii relation is applied to all fillets.

The fillet creation between two splines, a spline and a line, and a spline and an arc depends on the compatibility of the spline to be trimmed or extended.

Chamfering Sketched Entities

CommandManager:	Sketch > Sketch Fillet flyout > Sketch Chamfer
SolidWorks menus:	Tools > Sketch Tools > Chamfer
Toolbar:	Sketch > Sketch Fillet flyout > Sketch Chamfer

The **Sketch Chamfer** tool is used to apply a chamfer to the adjacent sketch entities at the point of intersection. A chamfer can be specified by two lengths or angle and length from the point of intersection. You can apply a chamfer between two nonparallel lines that may be intersecting or non-intersecting. The creation of a chamfer between two non-intersecting lines depends on the length of the lines and the chamfer distance. To create a chamfer, choose the **Sketch Chamfer** button from the **Sketch Fillet** flyout of the **Sketch CommandManager**; the **Sketch Chamfer PropertyManager** will be displayed, as shown in Figure 3-16. Next, select the two entities to be chamfered. You can also select the two entities

Evaluation Copy. Do not reproduce. For information visit www.cadcim.com

before invoking the **Sketch Chamfer** tool. The options in the **Sketch Chamfer PropertyManager** are discussed next.

Angle-distance

The **Angle-distance** radio button is selected to create a chamfer by specifying the angle and the distance. When you select this radio button, the **Direction 1 Angle** spinner will be displayed below the **Distance 1** spinner. Specify the distance and angle values in the **Distance 1** and **Direction 1 Angle** spinners, respectively. Next, select the two entities to which the chamfer needs to be applied; a chamfer will be created, as shown in Figure 3-17(a). Note that the angle will be measured from the first entity you have selected.

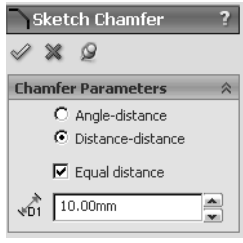

Figure 3-16 *The* ***Sketch Chamfer PropertyManager***

Distance-distance

When you invoke the **Sketch Chamfer PropertyManager**, the **Distance-distance** radio button and the **Equal distance** check box are selected by default. Clear this check box to specify two different distances for creating chamfer, refer to Figure 3-17(b). When you clear this check box, the **Distance 2** spinner will be displayed below the **Distance 1** spinner to set the value of the distance in the second direction. Specify the distance value in both the spinners. Next, select the two entities that need to be chamfered; the chamfer will be created, as shown in Figure 3-17(b). Note that the distance 1 value will be measured along the first entity that you have selected and the distance 2 value will be measured along the second entity.

Equal distance

When you invoke the **Sketch Chamfer PropertyManager**, the **Distance-distance** radio button and the **Equal distance** check box are selected by default. As a result, you can create an equal distance chamfer between the selected entities. Specify the distance value in the **Distance 1** spinner and select the entities; the chamfer will be created, as shown in Figure 3-17(c).

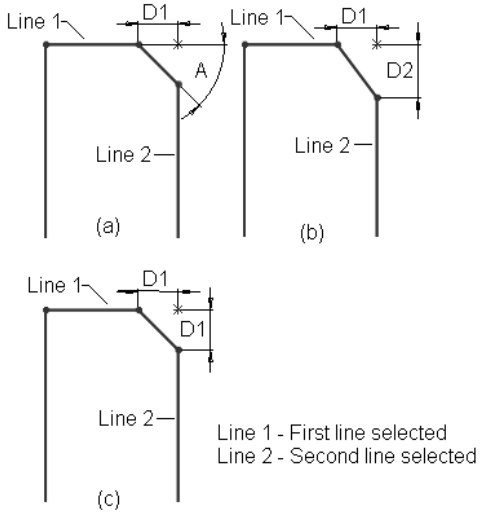

Figure 3-17 *Chamfer and its parameters*

You can also invoke the shortcut menu to choose the options discussed to create a chamfer. Choose the **OK** button from the **PropertyManager** to exit the tool.

Note

If you apply a sketch chamfer to the entities that are constrained using some relations or dimensions, the ***SolidWorks*** *message box will be displayed, showing the message:* ***At least one sketch constraint is about to be lost, Chamfer anyway?.*** *Choose the* ***Yes*** *button from this message box to create the chamfer. You will learn more about the relations and dimensions that constrain the sketch in the later chapters.*

Evaluation Copy. Do not reproduce. For information visit www.cadcim.com

Offsetting Sketched Entities

CommandManager:	Sketch > Offset Entities
SolidWorks menus:	Tools > Sketch Tools > Offset Entities
Toolbar:	Sketch > Offset Entities



Offset is one of the easiest methods to draw parallel lines or concentric arcs and circles. You can select the entire chain of entities as a single entity or select an individual entity to be offset. You can offset the selected sketched entities, edges, loops, and curves. You can also select the parabolic curves, ellipses, and elliptical arcs to be offset. When you choose the **Offset Entities** button from the **Sketch CommandManager**, the **Offset Entities PropertyManager** will be displayed, as shown in Figure 3-18. The options in the **Offset Entities PropertyManager** are discussed next.

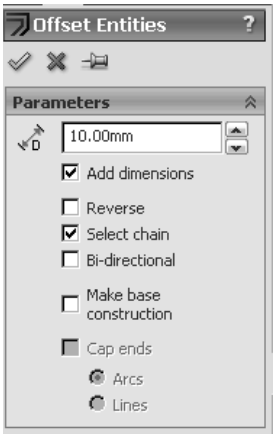

Figure 3-18** The **Offset Entities PropertyManager

Offset Distance

The **Offset Distance** spinner is used to set the distance through which the selected entity needs to be offset. You can set the value of the offset distance in this spinner or set the value by dragging the offset entity in the drawing area.

Add dimensions

The **Add dimensions** check box is selected by default in the **Parameters** rollout. Therefore, a dimension showing the offset distance between the parent entity and the resulting offset entity will be displayed on creating offset entities.

Reverse

The **Reverse** check box is used to change the direction of the offset. Note that while offsetting the entities by dragging, you do not need this check box. This is because you can change the direction of the offset by dragging the entities in the required direction.

Select chain

The **Select chain** check box is used to select the entire chain of continuous sketched entities that are in contact with the selected entity. When you invoke the **Offset** tool, the **Select chain** check box will be selected by default. If you clear this check box, only the selected sketched entity will be offset.

Bi-directional

The **Bi-directional** radio button is used to create the offset of a selected entity in both the directions of the selected entity. If the **Bi-directional** check box is selected, the **Reverse** check box will not be available in the **Parameters** rollout.

Make base construction

The **Make base construction** check box is used to convert the parent entity into a construction entity.

Evaluation Copy. Do not reproduce. For information visit www.cadcim.com

Cap ends

The **Cap ends** check box is available only when the **Bi-directional** check box is selected in the **Offset Entities PropertyManager**. On selecting this check box, the ends of the bidirectionally offset entities will be closed. You can select the **Arcs** or **Lines** radio button to specify the type of cap to close the ends. If you are offsetting a closed entity on both the directions, this option will not be available.

Figure 3-19 shows a new chain of entities created by offsetting the chain of entities and Figure 3-20 shows the offset of a single entity.

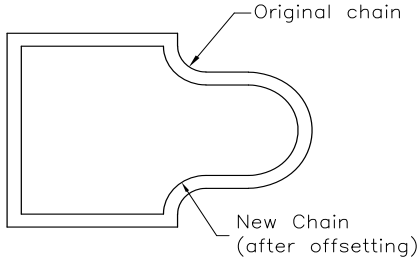

Figure 3-19 *Offsetting a chain of entities*

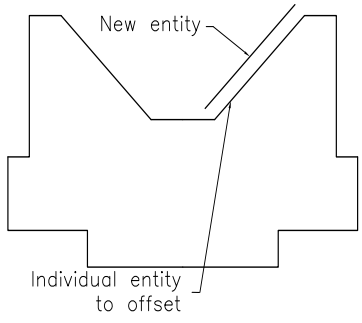

Figure 3-20 *Offsetting a single entity*

Tip. *While performing any kind of editing operation, if you want to clear the current selection set, right-click in the drawing area and choose* ***Clear Selections*** *from the shortcut menu displayed.*

Mirroring Sketched Entities

CommandManager:	Sketch > Mirror Entities
SolidWorks menus:	Tools > Sketch Tools > Mirror
Toolbar:	Sketch > Mirror Entities

The **Mirror Entities** tool is used to create the mirror image of the selected entities. The entities are mirrored about a centerline. When you create the mirrored entity, SolidWorks applies the symmetric relation between the sketched entities. If you change the entity, its mirror image will also change. To mirror existing entities, choose the **Mirror Entities** button from the **Sketch CommandManager**; the **Mirror PropertyManager** will be displayed, as shown in Figure 3-21. Also, you are prompted to select the entities to be mirrored. Select the entities from the drawing area; the name of the selected entities will be displayed in the **Entities to mirror** selection box. After selecting all entities to be mirrored, click once in the **Mirror about** selection box in the **Mirror PropertyManager**. Alternatively, you pause the mouse after selecting an entity, the **Select** symbol will be displayed below the cursor. Right-click when this symbol is displayed; the **Mirror about**



Figure 3-21 *The* ***Mirror PropertyManager***

Evaluation Copy. Do not reproduce. For information visit www.cadcim.com

selection box will be activated automatically and you will be prompted to select a line or a linear model edge to mirror about. Select a line or a centerline from the drawing area as the mirror line; the preview of the mirrored entities will be displayed. You need to make sure that the **Copy** check box is selected in the **Mirror PropertyManager**. If you clear this **Copy** check box, the parent selected entities will be removed and only the mirror image will be retained when you mirror the sketched entities. Choose the **OK** button from the **Mirror PropertyManager**.

Figure 3-22 shows the sketched entities with the centerline and Figure 3-23 shows the resulting mirror image of the sketched entities.

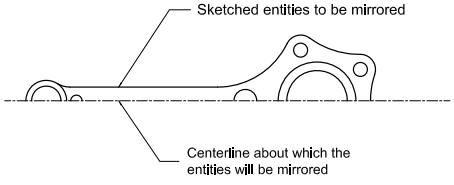

Figure 3-22 *Selecting the sketched entities and the centerline*

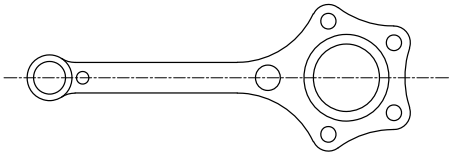

Figure 3-23 *Sketch after mirroring the geometry*

Mirroring While Sketching (Dynamic Mirror Entities)

CommandManager:	Sketch > Dynamic Mirror Entities	*(Customize to add)*
SolidWorks menus:	Tools > Sketch Tools > Dynamic Mirror	
Toolbar:	Sketch > Dynamic Mirror Entities	*(Customize to add)*



The **Dynamic Mirror Entities** tool is used to mirror the entities dynamically about a symmetry line while sketching. This tool is recommended when you are drawing the symmetric sketches. You need to add this tool to the **Sketch CommandManager** by using the **Customize** dialog box, as discussed earlier. To mirror the entities while sketching, choose the **Dynamic Mirror Entities** button from the **Sketch CommandManager**; the **Mirror PropertyManager** will be displayed, as shown in Figure 3-24.

The **Message** rollout in the **Mirror PropertyManager** informs that you need to select a sketch line or a linear model edge to mirror about. Select a line, a centerline, or a model edge from the drawing area that will be used as a symmetry line; the symmetry symbols appear at both ends of the centerline to indicate that the automatic mirroring is activated, as shown in Figure 3-25. Now, start drawing the sketch. The entity that you draw on one side of the centerline will automatically be created on the other side of the mirror line (centerline). As evident from Figure 3-26, the entities are mirrored automatically while sketching. Figure 3-27 shows the complete sketch with automatic mirroring. After completing the sketch using the automatic mirroring option, you need to choose the **Dynamic Mirror Entities** tool again to exit the tool.

Evaluation Copy. Do not reproduce. For information visit www.cadcim.com

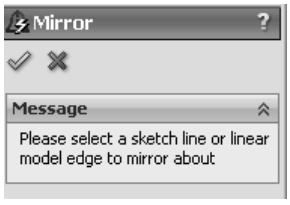

Figure 3-24 *The* ***Mirror PropertyManager***

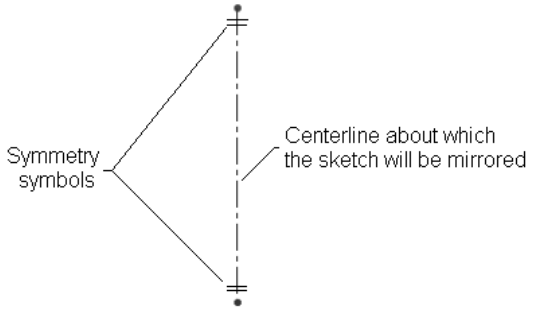

Figure 3-25 *The centerline and the symmetry symbols*

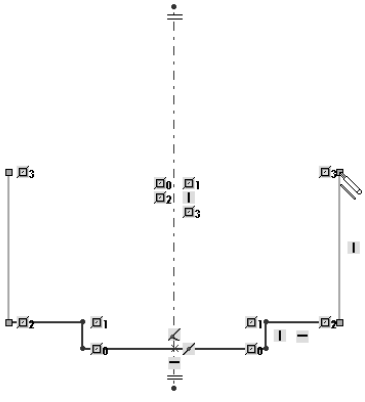

Figure 3-26 *Sketch drawn using the* ***Dynamic Mirror Entities*** *tool*

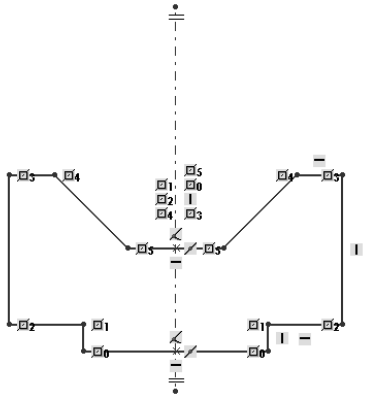

Figure 3-27 *Sketch drawn using the* ***Dynamic Mirror Entities*** *tool*

Moving Sketched Entities

CommandManager:	Sketch > Move Entities
SolidWorks menus:	Tools > Sketch Tools > Move
Toolbar:	Sketch > Move Entities



The **Move Entities** tool in the **Sketch CommandManager** is used to move an entity from one location to other. To move an entity, invoke this tool from the **Sketch CommandManager** or select the entities, right-click, and then choose the **Move Entities** option from the shortcut menu. Remember that this tool will be available only when at least one sketched entity is drawn. When you invoke this tool, the **Move PropertyManager** will be displayed, as shown in Figure 3-28, and you will be prompted to select the sketched items or the annotations to be moved. The options in this PropertyManager are discussed next.

Evaluation Copy. Do not reproduce. For information visit www.cadcim.com

Entities to Move Rollout

The options in this rollout are used to select the entities to be moved. You will notice that the **Sketch items or annotations** selection box is active in this rollout. The names of the entities selected to be moved will be displayed in this selection box. To remove an entity from the selection set, select it again from the drawing area. Alternatively, you can select its name from the **Sketch items or annotations** selection box and right-click to display the shortcut menu. Choose the **Delete** option from the shortcut menu. If you choose the **Clear Selections** option from the shortcut menu, all the entities in the selection set will be removed.

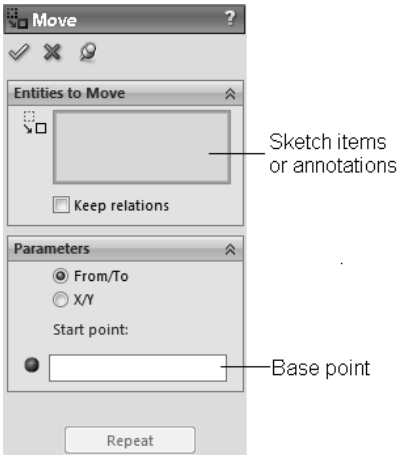

***Figure 3-28** The **Move** PropertyManager*

You will notice that by default, the **Keep relations** check box is cleared. If you move the sketched entities with this check box cleared, the relations applied to the entities to be moved will be removed. If you select this check box and then move the entities, then the relations applied to the sketched entities are retained even if you move the entities. You will learn more about relations later in this chapter.

Parameters Rollout

The **Parameters** rollout is used to specify the origin and destination positions of the entities selected to move. The options in this rollout are discussed next.

From/To

The **From/To** radio button is selected by default. So, you can move the selected entities from one point to another. To move the selected entities using this option, click once in the **Base point** selection box; you will be prompted to define the base point. Click anywhere in the drawing area to specify the base point; a yellow circle will be displayed where the start point is specified and you will be prompted to define the destination point. Select a point anywhere in the drawing area to place the selected entities.

X/Y

The **X/Y** radio button is selected to move the selected entities by specifying the relative coordinates of X and Y. On selecting this radio button, the **Delta X** and **Delta Y** spinners will be displayed below this radio button. Set the values of the destination coordinates in these spinners with respect to the current location.

Repeat

If the **Repeat** button is chosen, the entities will move further with the incremental distance specified in the **Delta X** and **Delta Y** spinners.

Figure 3-29 shows the selected entities being moved using the **Move Entities** tool. In this figure, the upper and right edges of a rectangle are selected to be moved.

Evaluation Copy. Do not reproduce. For information visit www.cadcim.com

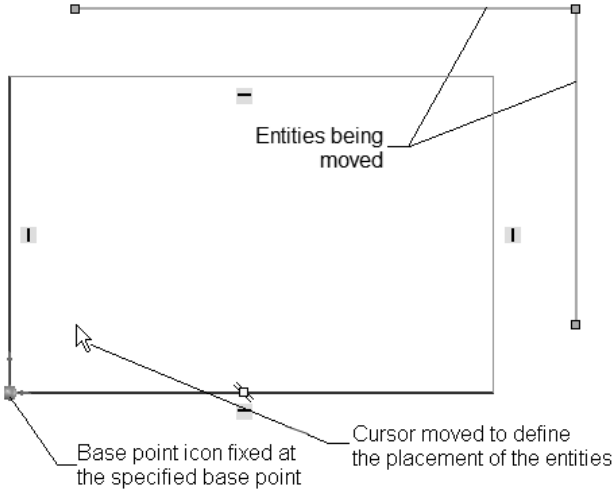

Figure 3-29 *Moving the selected entities*

Rotating Sketched Entities

CommandManager:	Sketch > Move Entities flyout > Rotate Entities
SolidWorks menus:	Tools > Sketch Tools > Rotate
Toolbar:	Sketch > Move Entities flyout > Rotate Entities



To rotate the sketched entities, choose the **Rotate Entities** tool from the **Move Entities** flyout in the **Sketch CommandManager**, as shown in Figure 3-30. Alternatively, select the entities and right-click to display the shortcut menu. Then, choose **Rotate Entities** from the shortcut menu; the **Rotate PropertyManager** will be displayed, as shown in Figure 3-31, and you will be prompted to select the sketched items or annotations.

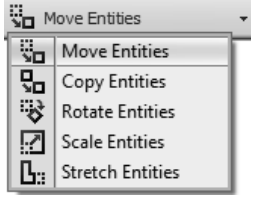

Figure 3-30 *Tools in the* ***Move Entities*** *flyout*

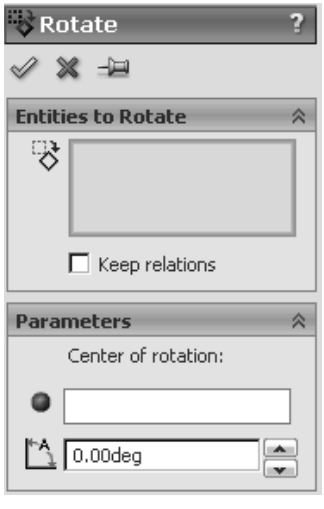

Figure 3-31 *The* ***Rotate PropertyManager***

Evaluation Copy. Do not reproduce. For information visit www.cadcim.com

Select the entities to be rotated; the names of the selected entities will be displayed in the **Sketch items or annotations** selection box of the **Entities to Rotate** rollout. Next, click in the **Base point** selection box in the **Parameters** rollout; you will be prompted to specify the center point of rotation. As soon as you specify the center point, the **Angle** spinner in the **Parameters** rollout will be highlighted. You can specify the angle of rotation using this spinner. You can also drag the mouse on the screen to define the angle of rotation.

Figure 3-32 shows a rectangle being rotated by dragging the cursor to define the angle of rotation. The lower right vertex of the rectangle is taken as the center point of rotation.

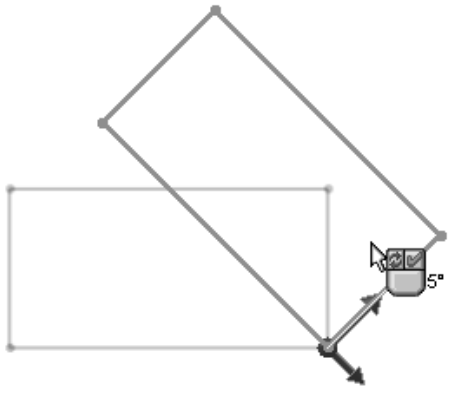

Figure 3-32 *Dragging the cursor to rotate the rectangle*

Scaling Sketched Entities

CommandManager:	Sketch > Move Entities flyout > Scale Entities
SolidWorks menus:	Tools > Sketch Tools > Scale
Toolbar:	Sketch > Move Entities flyout > Scale Entities



To resize the entities, choose the **Scale Entities** tool from the **Move Entities** flyout in the **Sketch CommandManager**. You can also select the entities and right-click to display the shortcut menu. Next, choose **Scale Entities** from the shortcut menu to invoke this tool; the **Scale PropertyManager** will be displayed, as shown in Figure 3-33, and you will be prompted to select the sketched items or annotations.

Select the entities to be resized; the names of the selected entities will be displayed in the **Sketch items or annotations** selection box of the **Entities to Scale** rollout. After selecting the entities to be scaled, right-click; you will be prompted to specify the point about which to scale. Specify the base point in the drawing area by clicking the left mouse button.

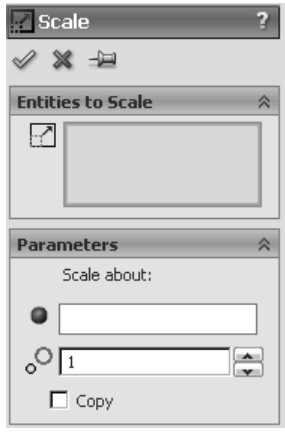

Figure 3-33 *The* ***Scale PropertyManager***

Evaluation Copy. Do not reproduce. For information visit www.cadcim.com

After specifying the base point, specify the magnification factor in the **Scale Factor** spinner of the **Parameters** rollout. The entities will be resized based on the value set in this spinner.

If you need to create the copies of the selected entities, select the **Copy** check box. Else, choose the **OK** button from the **Scale PropertyManager**; the selected entities will be resized. On selecting the **Copy** check box, the **Number of Copies** spinner will be displayed. Set the number of instances in this spinner and choose the **OK** button from the **Scale PropertyManager**; the entities will be resized and their copies will be created with an incremental scale factor with respect to the original entities selected.

Note

If in a selected set, geometric dimensions are specified to entities, then those entities will not be modified.

Copying and Pasting Sketched Entities

CommandManager:	Sketch > Move Entities flyout > Copy Entities
SolidWorks menus:	Tools > Sketch Tools > Copy
Toolbar:	Sketch > Move Entities flyout > Copy Entities

The **Copy Entities** tool allows you to copy the selected sketched entity and paste it to other location. Note that if dimensions are also selected along with the entities to be copied, then the dimensions will also be copied along with the sketched entities. To copy and paste the sketched entities, choose the **Copy Entities** tool from the **Move Entities** flyout in the **Sketch CommandManager**; the **Copy PropertyManager** will be displayed, as shown in Figure 3-34.

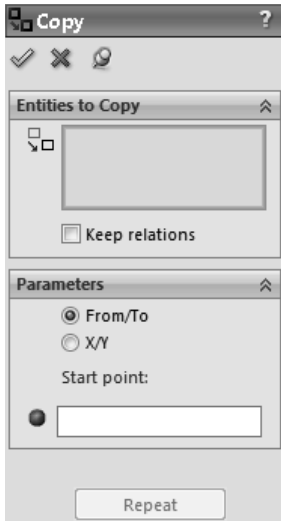

Figure 3-34** The **Copy PropertyManager

Select the entities that you want to copy and then select the **From/To** radio button, if it is not selected by default. Next, click once in the **Base point** selection box and then specify the base point. Now, move the cursor; you will notice that the preview of the entities to be copied will be attached to the cursor. Click at a location in the drawing area to place the copied entities. If you need to create multiple copies, left-click at different locations. Else, right-click to invoke the shortcut menu and then choose the **OK** option from it to exit the tool. On selecting the **X/Y** radio button in the **Parameters** rollout of the **Copy PropertyManager**, you need to specify the X and Y coordinates of the new entities with respect to their current location and choose the **OK** button. Note that on selecting the **X/Y** radio button, you cannot create multiple copies of the selected entities.

CREATING PATTERNS

Sometimes, while creating a base feature, you may need to place the sketched entities in a particular arrangement such as along linear edges or around a circle. For example, refer to Figures 3-35 and 3-36, which show the base features with slots. These slots are created with the

Evaluation Copy. Do not reproduce. For information visit www.cadcim.com

help of linear and circular patterns of the sketched entities. The tools that are used to create the linear and circular patterns of the sketched entities are discussed next.

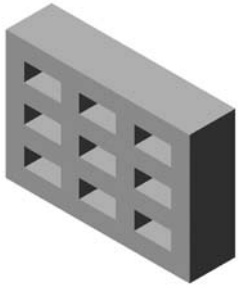

Figure 3-35 *Base feature with slots created along the linear edges*



Figure 3-36 *Base feature with slots created around a circle*

Creating Linear Sketch Patterns

CommandManager:	Sketch > Linear Sketch Pattern
SolidWorks menus:	Tools > Sketch Tools > Linear Pattern
Toolbar:	Sketch > Linear Sketch Pattern



In SolidWorks, the linear pattern of the sketched entities is created using the **Linear Sketch Pattern** tool. To create the linear pattern, select the sketched entities from the drawing area. Then, choose the **Linear Sketch Pattern** button from the **Sketch CommandManager**; the **Linear Pattern PropertyManager** will be displayed, as shown in Figure 3-37. Also, the preview of the linear pattern will be displayed in the drawing area and the arrow cursor will be replaced by the linear pattern cursor. Note that if you have not selected the sketched entities to be patterned before invoking this tool, you will have to select them one by one using the linear pattern cursor. The names of the selected entities are displayed in the **Entities to Pattern** rollout. Note that you cannot select more than one entity by drawing a window using the linear pattern cursor.

The options in this PropertyManager are discussed next.



Figure 3-37 *The* ***Linear Pattern PropertyManager***

Direction 1 Rollout

The options in the **Direction 1** rollout are used to define the first direction, distance between instances, number of instances, and the angle of pattern direction.

When the **Linear Pattern PropertyManager** is invoked, you will notice that only the options in the **Direction 1** rollout are active. Select the sketched entities to be patterned; a callout will be attached to the direction arrow. The edit boxes in this callout are used to define the number of instances and the distance

Evaluation Copy. Do not reproduce. For information visit www.cadcim.com

between the instances to be created. Alternatively, you can define these values in the **Spacing** and **Number** spinners in the **Direction 1** rollout. You can also define the distance between the instances by dragging the select point provided on the tip of the direction arrow. By default, direction 1 is parallel to the X-axis. If you need to select any existing line or a model edge to define direction 1, click in the selection box in the **Direction 1** rollout and select a line or an edge of the existing feature. Click on the direction arrow or choose the **Reverse direction** button from this rollout to reverse the pattern direction, if required. The **Angle** spinner is used to define the angle of the direction of the pattern. By default, the direction of the pattern is set to 0-degree. If the **Dimension X spacing** check box is selected, the dimension will be attached between the parent instance and the first instance of the pattern. On selecting the **Display instance count** check box, the number of instances will be displayed in the resulting sketch pattern. Select this check box, if you need to create configurations in sketch patterns using the **Design Table**. Creating configurations using the **Design Table** is discussed in the later chapters.

Figure 3-38 shows the preview of the linear pattern with instances along the direction1. Figure 3-39 shows a linear pattern at an angle of 30-degree.

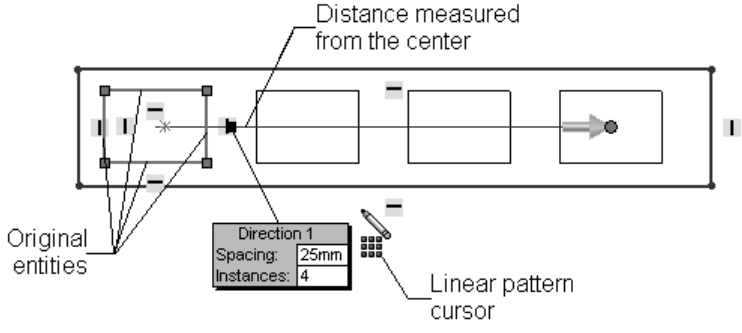

Figure 3-38 *Preview of the linear pattern with four instances along direction 1 and one instance along direction 2*

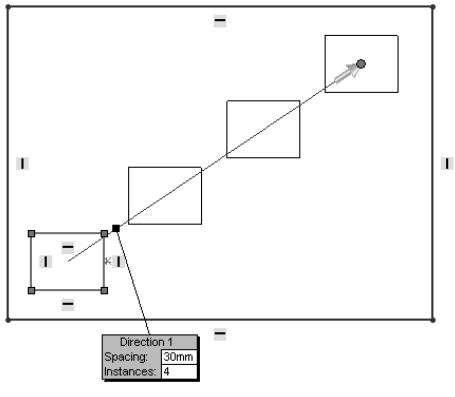

Figure 3-39 *Preview of the linear pattern at an angle of 30-degree along direction 1*

Evaluation Copy. Do not reproduce. For information visit www.cadcim.com

Direction 2 Rollout

The options in the **Direction 2** rollout are used to create pattern of the selected entities in the second direction. You will notice that the preview is not displayed in the second direction. This is because the value of the number of instances is set to 1 in the **Number** spinner. This means by default, only one instance will be created in the second direction and that is the parent instance. If you set the value of the number of instances to more than 1, then the options in this rollout will be enabled. All options in this rollout are the same, except the **Dimension angle between axes** check box. Select this check box to apply an angular dimension to the reference direction lines of both directions. Figure 3-40 shows a linear pattern created by specifying instances in both directions.

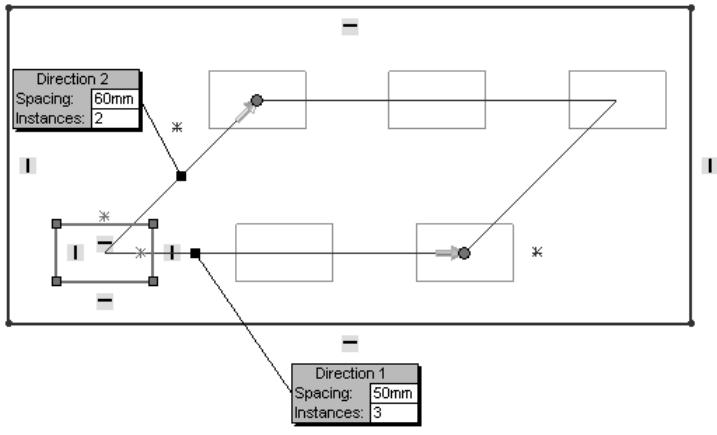

Figure 3-40 *Preview of the linear pattern at an angle of 45-degree along direction 2*



Tip. *You can also specify the spacing and angle values dynamically in the preview of the linear pattern. To do so, press the left mouse button on a control point displayed at the end of the arrow in the pattern preview and drag the cursor. After placing the arrow at the desired location, release the left mouse button; the new spacing and angle value will be displayed in the respective spinner.*

Instances to Skip Rollout

The **Instances to Skip** rollout is used to remove some of the instances from the pattern temporarily. By default, this rollout is not invoked. To invoke it, click on the down-arrow on the right side of the rollout. As soon as you activate the selection box in this rollout, pink dots will be displayed at the center of each pattern instance. To remove an instance from a pattern temporarily, move the cursor on the pink dot; a hand symbol will be displayed and its location will be displayed in the tooltip below the hand symbol in the matrix format. Click at the pink dot to remove a particular instance; the display of the instance will be turned off and its location will be displayed in the selection box. Also, the pink dot will change to an orange dot. Similarly, remove as many instances that you do not want to include in the pattern.

To restore the temporarily removed instances, select the orange dot displayed after hiding the instances. Alternatively, you can select the name of the instances from the **Instances to Skip** rollout and then press the DELETE key.

Evaluation Copy. Do not reproduce. For information visit www.cadcim.com



Tip. *You can also add entities from the current selection set by selecting them using the linear pattern cursor. To remove an entity from the selection set, select the entity, right-click, and then choose* ***Delete*** *from the shortcut menu. As you add or remove instances, the effect can be seen dynamically in the preview of the pattern.*

Creating Circular Sketch Patterns

CommandManager:	Sketch > Pattern flyout > Circular Sketch Pattern
SolidWorks menus:	Tools > Sketch Tools > Circular Pattern
Toolbar:	Sketch > Pattern flyout > Circular Sketch Pattern



In SolidWorks, the circular pattern of the sketched entities is created using the **Circular Sketch Pattern** tool. To create the circular pattern of an entity, select it and then choose the **Circular Sketch Pattern** tool from the **Pattern** flyout in the **Sketch CommandManager**; the **Circular Pattern PropertyManager** will be displayed, as shown in Figure 3-41, and the preview of the circular pattern will be displayed. Also, the arrow cursor will be replaced by the circular pattern cursor and the names of the selected entities will be displayed in the **Entities to Pattern** rollout.

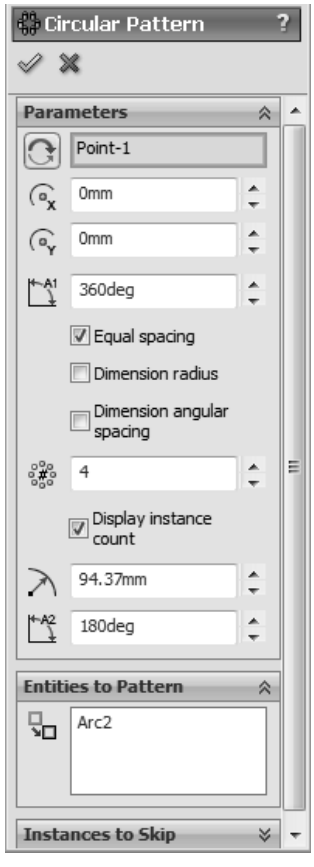

Figure 3-41** The **Circular Pattern PropertyManager

The options in the **Circular Pattern PropertyManager** are discussed next.

Parameters Rollout

The options in the **Parameters** rollout are used to define the centerpoint of the circular pattern, coordinates of the centerpoint of the reference circle, number of instances, angle between the instances or the total angle of pattern, radius of the reference circle, and so on. Figure 3-42 shows the parameters associated with the circular pattern. The options to define all these parameters are discussed next.

The **Reverse direction** button is used to reverse the default direction of the circular pattern. The selection box on the right of this button is used to select the centerpoint of the circular pattern. By default, the origin is selected as the center of the circular pattern. You can modify this location by using the **Center X** and **Center Y** spinners. Alternatively, click once in the selection box and select the point that you want to be the new centerpoint or drag the center point to the new point. You can set the value of the number of instances using the **Number of Instances** spinner.

By default, the **Equal spacing** check box is selected and the value of angle in the **Angle** spinner is set to 360-degree. When this check box is selected, the specified number of instances are equi-spaced radially. If you modify the default value in the **Angle** spinner, the angle between the

Evaluation Copy. Do not reproduce. For information visit www.cadcim.com

instances will be adjusted accordingly. However, if the **Equal Spacing** check box is cleared, then you need to specify the incremental angle between the instances using the **Angle** spinner.

The **Radius** spinner is used to modify the radius of the reference circle around which the circular pattern will be created. The **Arc Angle** spinner provided in this rollout is used to modify the angle between the centerpoint of the original pattern instance and the center of the reference circle.

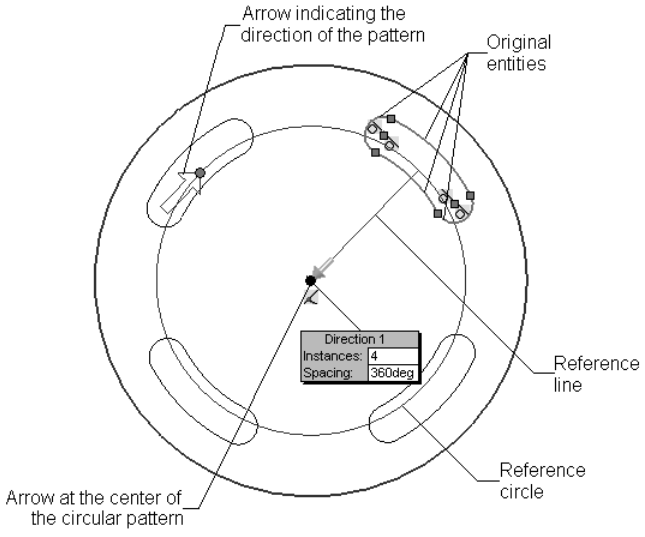

Figure 3-42 *Parameters associated with the circular pattern*

The **Dimension radius** and **Dimension angular spacing** check boxes are used to display the radius and angle between the pattern instances of the circular pattern. On selecting the **Display instance count** check box, the number of instances will be displayed in the resulting sketch pattern. Select this check box, if you need to create configurations in sketch patterns by using the **Design Table**. Creating configurations using the **Design Table** is discussed in later chapters.

Note

If you know the location of the centerpoint of the circular pattern, then it is recommended to drag the arrow to the center of the reference circle for defining the center of the circular pattern.

Instances to Skip Rollout

The **Instances to Skip** rollout is used to remove instances temporarily from the pattern. The procedure to skip instances is the same as discussed while creating the linear pattern.

Figure 3-43 shows the preview of the circular pattern with a 70-degree incremental angle between two successive instances. Figure 3-44 shows a circular pattern with the angle and spacing dimension values displayed in the pattern.

Tip. *You can modify the total angle between instances by pressing the left mouse button on the tip of the direction arrow and then dragging the cursor.*

Evaluation Copy. Do not reproduce. For information visit www.cadcim.com

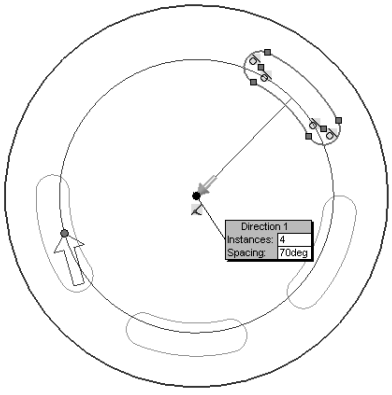

Figure 3-43 Creating circular pattern by defining incremental angle between individual instances

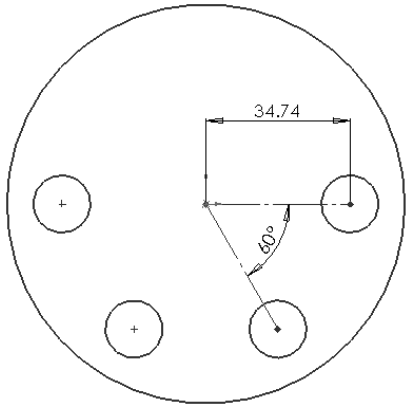

Figure 3-44 Spacing and angle values placed in the circular pattern

EDITING PATTERNS

You can edit the patterns of the sketched entities by using the shortcut menu that will be displayed when you right-click on any instance of the pattern. Depending on whether you right-click on the instance of the linear or circular pattern, the **Edit Linear Pattern** or **Edit Circular Pattern** option will be available in the shortcut menu. Figure 3-45 shows the partial view of the shortcut menu that will be displayed when you right-click on one of the instances of a circular pattern.

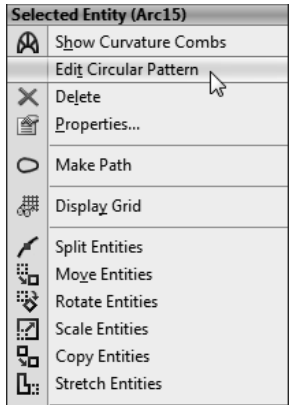

Figure 3-45 The shortcut menu displayed on right-clicking on an instance of a circular pattern

Depending on whether you choose the option to edit a linear pattern or a circular pattern, the **Linear Pattern Property Manager** or the **Circular Pattern PropertyManager** will be displayed. Note that only the parameters will be available in these PropertyManagers.

By using the **Circular Pattern PropertyManager**, you can edit the parameters of the patterns. If the distance between the instances or the angular dimension between the instances is displayed, then to change it without invoking a shortcut menu, double-click on the corresponding value; the **Modify** dialog box will be displayed. Enter a new value in the **Modify** dialog box and press ENTER. Similarly, if the number of instances is displayed in the sketch pattern, you can edit it by double-clicking on it and entering a new value in the edit box displayed. Note that if you are changing the number of instances, then the distances between the instances and the angle between the instances will be deleted. However, you can add the dimensions using the **Smart Dimension** tool and this procedure is discussed in later chapters.

Evaluation Copy. Do not reproduce. For information visit www.cadcim.com

WRITING TEXT IN THE SKETCHING ENVIRONMENT

CommandManager:	Sketch > Text
SolidWorks menus:	Tools > Sketch Entities > Text
Toolbar:	Sketch > Text



You can also write text in the sketching environment of SolidWorks and used it later to create join or cut features. To write the text, choose the **Text** button from the **Sketch CommandManager**; the **Sketch Text PropertyManager** will be displayed, as shown in Figure 3-46. Enter the text in the **Text** box in the **Text** rollout; the text will start from the sketch origin. To place the text at a specified location, exit the **Sketch Text PropertyManager** after writing the text. You will notice a dot at the start of the text. Drag the text and place at the required location. You can also change the format, font, justification, and so on using the options in the **Text** rollout. Figure 3-47 shows the text created using the **Text** tool.



Figure 3-46 *The* ***Sketch Text PropertyManager***

You can also create the text along a curve. To do so, first you need to create a curve. The curve can be an arc, a spline, a line, or a combination of a line, arc, and spline. Next, choose the **Text** button to invoke the **Sketch Text PropertyManager**. Select the curve or curves along which you need to create the text. Now, enter the text in the **Text** edit box; you will observe that the text is created along the arc. You can use the **Flip Horizontal** and **Flip Vertical** buttons to modify the position of the text. Figure 3-48 shows the text created along an arc.

To change the font size, clear the **Use document font** check box and set the value in the **Width Factor** and **Spacing** spinners. You can also choose the **Font** button to change the font and text size.



Figure 3-47 *Text created using the* ***Text*** *tool*



Figure 3-48 *Text created along an arc*

Evaluation Copy. Do not reproduce. For information visit www.cadcim.com



Note

*In SolidWorks, you can link the sketch text to the file properties by choosing the **Link to Property** button in the **Text** rollout.*



Tip. *If the text that you write appears reversed, you can draw a line from left to right and then use it as an element to align the text.*

MODIFYING SKETCHED ENTITIES

Most of the sketches require modification at some stages of design. Therefore, it is important for a designer to understand the process of modification in SolidWorks. Modification of various sketched entities is discussed next.

Modifying a Sketched Line

You can modify a sketched line by using the **Line Properties PropertyManager**. This PropertyManager is displayed when you select a line using the **Select** tool. Note that if the selected line is a part of a rectangle, polygon, or parallelogram, the entire object will be modified as you modify the line. This is because relations are applied to all lines of a rectangle, polygon, and a parallelogram.

Similarly, you can also modify a centerline using the **Line Properties PropertyManager**, which will be displayed when you select the centerline.

Modifying a Sketched Circle

To modify a sketched circle, select it using the **Select** tool; the **Circle PropertyManager** will be displayed with the coordinate values of the centerpoint of the circle and the value of the radius in the **Parameters** rollout. You can modify the values in the respective edit boxes.



Tip. *The status of the sketched entity that you select for modification is displayed in the **Existing Relations** rollout of the PropertyManager, which is displayed on selecting an entity. For example, if the selected entity is fully defined, it will be displayed in the PropertyManager and if the entity is underdefined, the PropertyManager will display a message that the entity is underdefined.*

Modifying a Sketched Arc

To modify a sketched arc, select it using the **Select** tool; the **Arc PropertyManager** will be displayed with the coordinate values of the centerpoint, start point, and endpoint. The values of the radius and the included angle will also be displayed. You can modify the values in the respective edit boxes.

Modifying a Sketched Polygon

To modify a sketched polygon, right-click on any one edge of the polygon to display the shortcut menu. Choose the **Edit polygon** option from the shortcut menu to display the **Polygon PropertyManager**. You can modify the selected polygon using the options in the **Polygon PropertyManager**.

Evaluation Copy. Do not reproduce. For information visit www.cadcim.com

Note

*If you right-click on the reference circle that is automatically drawn when you draw a polygon, the **Edit polygon** option will not be available in the shortcut menu.*

Modifying a Spline

You can perform four types of modification on a spline. The first is the modification of the coordinates of the selected control point. The second modification is by using the Spline Handles. The third type of modification is by using the Control polygons. The fourth type of modification is the addition of a curvature control symbol. These modifications are discussed in detail next.

Modifying a Spline by Using the Control Points

To modify the location of the control points of a spline, select the spline; the **Spline PropertyManager** will be displayed. The control points of the spline will be displayed with a square. The number of the current control point and its coordinates will also be displayed in the **Parameters** rollout of the **Spline PropertyManager**, as shown in Figure 3-49. When you set the value in the **Spline Point Number** spinner, the corresponding control point will be selected in the spline. Now, you can modify its coordinates using the **X Coordinate** and **Y Coordinate** spinners. Alternatively, you can select and drag a control point, to place it on the desired location.

You can also add more control points to a spline. To do so, choose **Tools > Spline Tools > Insert Spline Point** from the SolidWorks menus. Alternatively, select the spline and right-click to invoke the shortcut menu. In this menu, choose the **Insert Spline Point** option. Now, specify a location on the spline where you need to add the control point; a point and a spline handle will be displayed at the point specified on the spline. The spline handles are discussed in the next section. Similarly, you can add as many control points as needed. After adding the required number of control points, invoke the **Select** tool and select the spline again. You will notice that the boxes of control points are displayed on all points including the newly added points.

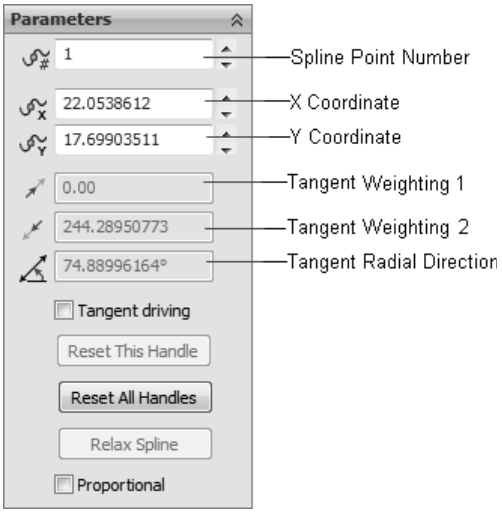

Figure 3-49 Parameters** rollout of the **Spline PropertyManager

Modifying a Spline by Using the Spline Handles

A spline handle is a line with diamond handle, arrow, and circular handle on both its endpoints. The spline handles will be displayed when you select a spline using the **Select** tool. The default spline handles will be displayed in gray, which implies that they are not selected. When you move the cursor over a spline handle, it will be highlighted in orange. Additionally, a rotate symbol will be displayed if you move the cursor near the diamond handle. A red colored arrow

Evaluation Copy. Do not reproduce. For information visit www.cadcim.com

symbol will be displayed, if you move the cursor near the arrow. If you move the cursor near the circular handle, both the symbols will be displayed, as shown in Figure 3-50.

Move the cursor near the diamond handle, arrows, or circular handle; it will be highlighted. On selecting any of these entities, the number of respective control points and their coordinates will be displayed in the **Parameters** rollout. Select and drag the diamond handle to dynamically modify the direction of the tangent. As you drag the diamond handle, the value in the **Tangent Radial Direction** spinner will change dynamically. When you drag the cursor the **Tangent Driving** check box is also selected automatically. After modifying the shape of the spline, click anywhere in the drawing area to exit the current selection set. You will notice that the currently modified spline handle is displayed in blue, which implies that the default setting of this spline handle is modified. Select and drag the arrowhead to modify the tangent weighting. As you drag the arrowhead, the value in the **Tangent Weighting** spinner will change dynamically. If you press the ALT key while dragging the arrowhead, the spline will get deformed symmetrically. Similarly, you can edit the spline using the circular handle. In this case, both the symbols will be displayed. So, the values in the **Tangent Radial Direction** and **Tangent Weighting** spinners will change dynamically.

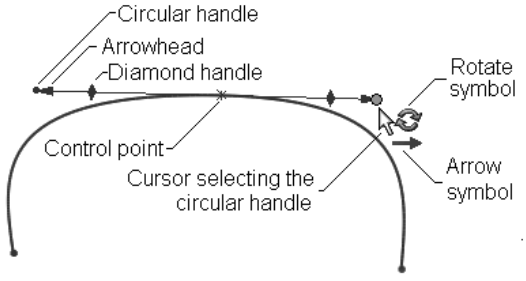

Figure 3-50 *The spline and the spline handle*

Choose the **Reset This Handle** button to reset the current handle to the original position. Choose the **Reset All Handles** button to reset all handles to the default position. To create a smooth curvature after editing the handles, choose the **Relax Spline** button.

To add more spline handles, select the spline and right-click to invoke the shortcut menu. Choose the **Add Tangency Control** option from the shortcut menu; a spline handle will be attached to the selected spline. Move the cursor to the location where you want to place the spline handle and click on that location. A spline control point will also be added along with the spline handle. You can also apply relations to the spline handles. You will learn more about relations in the later chapters. You can also delete the spline handles by selecting the control point and pressing the DELETE key.

You can also apply dimensions to the spline handles to shape a spline accurately. You will learn more about dimensioning in the later chapters.

Modifying a Spline by Using the Control Polygon

To display the control polygon, select a spline and right-click; a shortcut menu will be displayed. Choose the **Display Control Polygon** option; the control polygons will be displayed, as shown in Figure 3-51. When you select a control polygon, the **Spline Polygon PropertyManager** will be displayed. You can also set the location of the control points by using the **X Coordinate** and **Y Coordinate** spinners in the **Spline Polygon PropertyManager**. You can modify the location of a control point by dragging it. To turn off the display of the control polygon, select a spline, invoke the shortcut menu, and choose **Display Control Polygon** again.

Evaluation Copy. Do not reproduce. For information visit www.cadcim.com

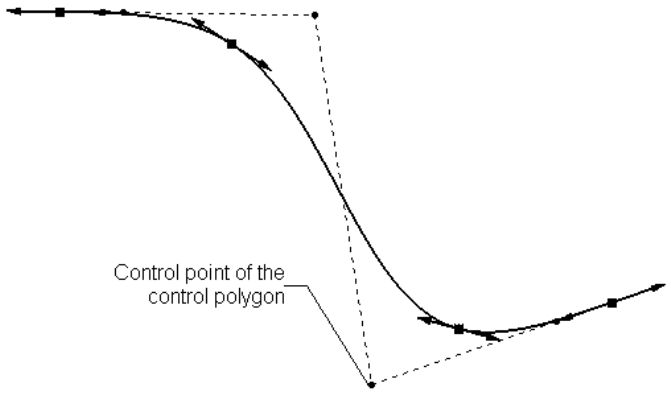

Figure 3-51 *Control point of the control polygon*

Adding the Curvature Control

You can also add a curvature control symbol that is used to modify the curvature of a spline. To add a curvature control, select a spline and invoke the shortcut menu. Choose the **Add Curvature Control** option from it; the curvature control symbol will be attached to the selected spline. Move the cursor to the location where you want to place the curvature control symbol and click; the curvature control will be added. Also a spline handle will be placed at the location where the curvature control symbol is attached tangent to the spline. Now, select and drag the dot symbol at the bottom of this curvature control symbol. You will notice that the curvature of the spline is modified dynamically as you drag the cursor. After modifying the shape of the spline, release the left mouse button. You can also delete the curvature control symbol by selecting it and pressing the DELETE key.

Modifying the Coordinates of a Point

To modify the location of a point, select it using the **Select** tool; the **Point PropertyManager** will be displayed. You can modify the coordinates of the sketched point using this PropertyManager.

Modifying an Ellipse or an Elliptical Arc

To modify an ellipse or an elliptical arc, select it using the **Select** tool; the **Ellipse PropertyManager** will be displayed. You can modify the parameters of the ellipse using the options in this PropertyManager.

Modifying a Parabola

To modify a parabola, select the parabola using the **Select** tool; the **Parabola PropertyManager** will be displayed. Modify the parameters of the parabola from this PropertyManager.

Dynamically Modifying and Copying Sketched Entities

In the sketching environment of SolidWorks, you can relocate the sketched entities by dynamically dragging them using the left mouse button. For example, consider a case where

Evaluation Copy. Do not reproduce. For information visit www.cadcim.com

you create the sketch of a rectangle and you want to increase the size of the rectangle. You simply have to select any of the lines or vertices of the rectangle and hold the left mouse button to drag the cursor. Drag the sketch according to your requirement and then release the left mouse button; all segments in the rectangle will be dragged. However, if you choose **Tools > Sketch Settings > Detach Segment on Drag** from the SolidWorks menus and select a line of a rectangle to drag, the line segment will be detached from the rectangle. As this option is not activated by default, the segments of the selected entities are not detached on dragging.

You can also copy the sketched entities dynamically. To do so, select the sketched entity or entities to be copied. Press and hold the CTRL key and then drag the selected entity or entities; the preview of the copied entities will be displayed. Release the left mouse button at the location where you want to place the new entities. You can make multiple copies of the selected entities by repeating this procedure.

Splitting Sketched Entities

CommandManager:	Sketch > Split Entities	*(Customize to add)*
SolidWorks menus:	Tools > Sketch Tools > Split Entities	
Toolbar:	Sketch > Split Entities	*(Customize to add)*



The **Split Entities** tool is used to split a sketched entity into two or more entities. To split an entity, invoke the **Split Entities** tool from the **Sketch CommandManager**; the **Split Entities PropertyManager** will be displayed. Move the cursor to a location from where you want to split the sketched entity. When the cursor snaps to the entity, press the left mouse button to add a split point. Next, right-click to display the shortcut menu and then choose the **OK** option from the shortcut menu. Select the sketched entity using the select cursor. You will notice that the sketched entity is divided in two entities and a split point is added between the two sketched entities. You can add as many split points as you need. Remember that to split a circle, a full ellipse, or a closed spline, you need to split them at least at two points.

You can also delete the split points to convert a split entity into a single entity. To delete a split point, select the split point and press the DELETE key. You can also right-click on the split point to display the shortcut menu, and then choose the **Delete** option from it.

TUTORIALS

Tutorial 1

In this tutorial, you will draw the base sketch of the model shown in Figure 3-52. The sketch of the model is shown in Figure 3-53. You will draw the sketch with a mirror line and a mirror tool. After drawing the sketch, you will modify it by dragging the sketched entities.

(**Expected time: 30 min**)

The following steps are required to complete this tutorial:

a. Start SolidWorks and then a new part document.
b. Invoke the sketching environment.

Evaluation Copy. Do not reproduce. For information visit www.cadcim.com

c. Create centerlines and convert one of the centerlines to mirror line using the **Dynamic Mirror Entities** tool.
d. Create the sketch in the third quadrant; the sketch will automatically be mirrored on the other side of the mirror line, refer to Figure 3-54.
e. Mirror the entire sketch along the second mirror line, refer to Figure 3-55.
f. Modify the sketch by dragging the sketched entities, refer to Figure 3-56.

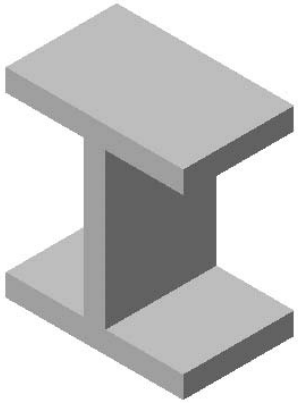

Figure 3-52 *Solid model for Tutorial 1*

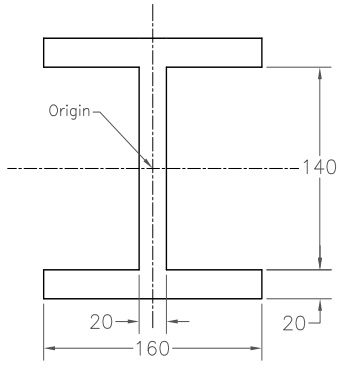

Figure 3-53 *Sketch for Tutorial 1*

Starting SolidWorks and then a New SolidWorks Document

1. Start SolidWorks by choosing **Start > All Programs > SolidWorks 2013 > SolidWorks 2013** or by double-clicking on the shortcut icon of SolidWorks 2013 on the desktop of your computer.

   The **SolidWorks Resources** task pane is displayed on the right of the window.

2. Select the **New Document** option in the **Getting Started** rollout of the **SolidWorks Resources** task pane; the **New SolidWorks Document** dialog box is displayed.

3. In the dialog box, the **Part** button is chosen by default. Choose the **OK** button from this dialog box.

   Next, you need to invoke the sketching environment.

4. Choose the **Sketch** tab from the **CommandManager**. Next, choose the **Sketch** button from the **Sketch CommandManager**; the **Edit Sketch PropertyManager** is invoked and you are prompted to select the plane to create the sketch.



5. Select the **Front Plane**; the sketching environment is invoked and the plane is oriented normal to the view.

Modifying the Grid and Snap Settings, and the Dimensioning Units

Before drawing the sketch, you need to modify the grid and snap settings to make the cursor jump through a distance of 10 mm.

Evaluation Copy. Do not reproduce. For information visit www.cadcim.com

1. Choose the **Options** button from the Menu Bar; the **System Option - General** dialog box is displayed. 

   While installing SolidWorks, if you have selected a unit other than millimeter to measure the length, you need to select millimeter as the unit for the current drawing by following the next two steps.

2. Choose the **Document Properties** tab and select the **Units** option from the area on the left-side of the **Document Properties - Drafting Standard** dialog box.

3. Next, select the **MMGS (millimeter, gram, second)** radio button in the **Unit system** area and select **degrees** from the drop-down list in the cell corresponding to the **Angle** row and the **Unit** column.

4. Next, click on the **Grid/Snap** option from the area on the left of the dialog box. Set the values **100** and **10** in the **Major grid spacing** spinner and the **Minor-lines per major** spinner, respectively.

   On invoking the sketching environment, if the grid is displayed by default, you can turn off its display by clearing the **Display grid** check box in the **Grid** area.

5. Choose the **Go To System Snaps** button and select the **Grid** check box. Next, clear the **Snap only when grid is displayed** check box, if it is selected.

6. After making the necessary settings, choose the **OK** button.

   The coordinates displayed close to the lower right corner of the SolidWorks window show an increment of 10 mm when you move the cursor in the drawing area after exiting the dialog box.

Drawing the Centerlines and Converting Them into Mirror Lines

It is recommended that you draw symmetrical sketches about an axis by using any of the mirroring tools. In this tutorial, you will draw the sketch using the **Line**, **Dynamic Mirror** and **Mirror Entities** tools. However, you can also complete this tutorial by using the **Line** and **Dynamic Mirror** tools.

1. Choose the **Centerline** button from the **Line** flyout available in the **Sketch CommandManager**. 

2. Move the line cursor to a location whose coordinates are 0 mm, 100 mm, and 0 mm. You may have to zoom the drawing to locate that point.

3. Specify the start point of the centerline at this point, move the cursor vertically downward and draw a line of 200 mm length. You may have to zoom and pan the drawing to draw a line of this length.

Evaluation Copy. Do not reproduce. For information visit www.cadcim.com

4. Now, double-click anywhere on the screen to end the current chain or press the right mouse button anywhere in the drawing area to invoke the shortcut menu and choose the **End chain** option from it.

5. Move the line cursor to a location whose coordinates are -100 mm, 0 mm, and 0 mm.

6. Specify the start point of the centerline and move the cursor horizontally toward the right to draw a line of 200 mm length. Pan the drawing, if required.

7. Press F to fit the drawing on the screen. Right-click and choose the **Select** option from the shortcut menu; the line cursor is replaced by the select cursor.

8. Select the vertical centerline.

9. Choose **Tools > Sketch Tools > Dynamic Mirror** tool from the SolidWorks menus;  the vertical centerline is converted into a mirror line and the dynamic mirror option is activated.

   You can confirm the creation of the mirror line and the activation of the dynamic mirror option by observing the symmetrical symbol displayed on both ends of the centerline.

Drawing the Sketch

Next, you need to draw the sketch of the base feature. You will draw the sketch in the third quadrant and the same sketch will be created automatically on the other side of the mirror line. The symmetrical relation is applied between the parent entity and the mirrored entity.

1. Press the L key on the keyboard; the **Line** tool is invoked.

2. Move the line cursor to a location whose coordinates are 0 mm, -100 mm, and 0 mm.

3. Specify this point as the start point of the line and move the cursor horizontally toward the left.

4. Specify the endpoint of the line when 80 is displayed above the line cursor.

   You will notice that as soon as you specify the endpoint of the line, a mirror image is automatically created on the other side of the mirror line. The line drawn as the mirrored entity is merged with the line drawn on the left. Therefore, the entire line becomes a single entity. Remember that the lines will merge only if one of the endpoints of the line drawn is coincident with the mirror line.

5. Move the cursor vertically upward and click to specify the endpoint of the line when the length of the line above the line cursor shows the value 30.

   You will notice that as soon as you specify the endpoint of the line, a mirror image is created automatically on the other side of the mirror line.

Evaluation Copy. Do not reproduce. For information visit www.cadcim.com

6. Move the line cursor toward the right and click to specify the endpoint of the line when the length of the line above the line cursor shows the value 30; a mirror image is created automatically on the other side of the mirror line.

7. Move the line cursor vertically upward and click to specify the endpoint of the line when the line cursor snaps the horizontal centerline. Exit the **Line** tool. The sketch after drawing the lines is shown in Figure 3-54.

Mirroring the Entire Sketch

After creating one-half of the sketch, you need to mirror the entire sketch about the horizontal centerline. But, first you need to disable automatic mirroring.

1. Right-click and choose **Recent Commands > Dynamic Mirror Entities** from the shortcut menu to disable dynamic mirroring.

2. Use the box selection method to select all the lines sketched earlier and also the horizontal centerline. Make sure you do not select the vertical centerline.

3. Choose the **Mirror Entities** button from the **Sketch CommandManager**; the entire sketch is mirrored about the horizontal centerline. The sketch after mirroring the sketched entities is shown in Figure 3-55.

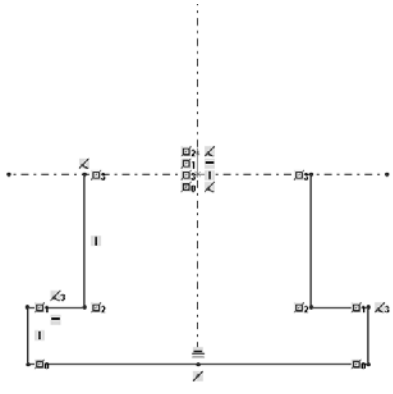

Figure 3-54 *Sketch after drawing the lines*

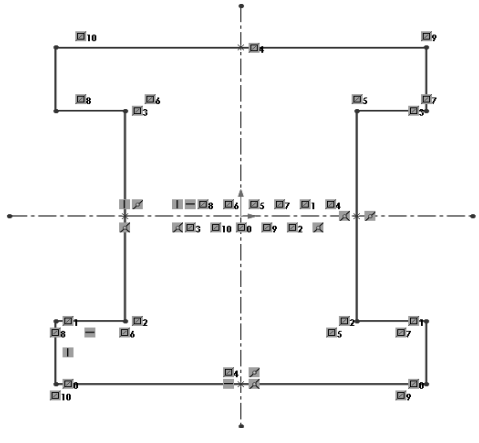

Figure 3-55 *Sketch after mirroring sketched entities*

Modifying the Sketch by Dragging Entities

Next, you need to modify the sketch by dragging. While dragging the entities, you will observe that the corresponding mirrored entity is also being modified.

1. Select the lower right vertical line; the **Line PropertyManager** is displayed on the left of the drawing area. You will notice that the value in the **Length** spinner is 30.

2. As the required length of this line is 20, set the value in the **Length** spinner to **20** in the

Evaluation Copy. Do not reproduce. For information visit www.cadcim.com

Parameters rollout. You will observe that all dependent lines are also modified. This is because they are created as mirror images.

3. Choose the **OK** button or click once in the drawing area.

4. Select the midpoint of the right vertical line that passes through the horizontal centerline; the **Point PropertyManager** is displayed. You will notice that the coordinates of this point are 50,0.

5. Press and hold the left mouse button and drag the point toward the origin; the value in the **X Coordinate** spinner of the **Parameters** rollout changes dynamically.

6. Release the left mouse button when the **X Coordinate** spinner shows the value 10. The final sketch after modifying the sketched entities by dragging them is shown in Figure 3-56.

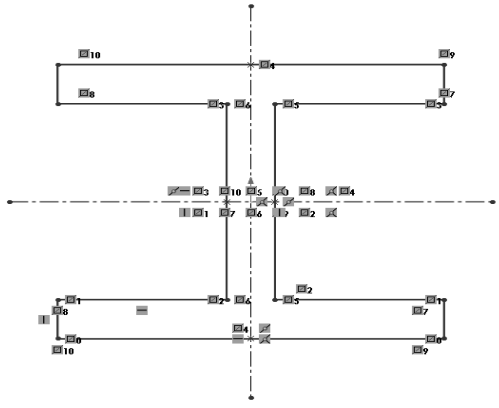

Figure 3-56 *Final sketch for Tutorial 1*

Saving the Sketch

1. Choose the **Save** button from the Menu Bar to invoke the **Save As** dialog box.

2. Choose the **New Folder** button from the **Save As** dialog box. Enter the name of the folder as **c03** and press ENTER. Enter the name of the document as **c03_tut01** in the **File name** edit box and choose the **Save** button.

3. Press CTRL+W to close the file.

Tutorial 2

In this tutorial, you will create the sketch of the model shown in Figure 3-57. The sketch of the model is shown in Figure 3-58. Do not dimension the sketch as the solid model and the dimensions are given for your reference only. (**Expected time: 30 min**)

The following steps are required to complete this tutorial:

a. Start a new part document.
b. Invoke the sketching environment.
c. Create a centerline.
d. Draw and edit the sketch using the **Mirror Entities** and **Trim Entities** tools, refer to Figure 3-60.

Evaluation Copy. Do not reproduce. For information visit www.cadcim.com

e. Offset the entire sketch, refer to Figure 3-61.
f. Complete the final editing of the sketch using the **Extend Entities** and **Trim Entities** tools, refer to Figures 3-62 and 3-63.



Figure 3-57 *Solid model for Tutorial 2*

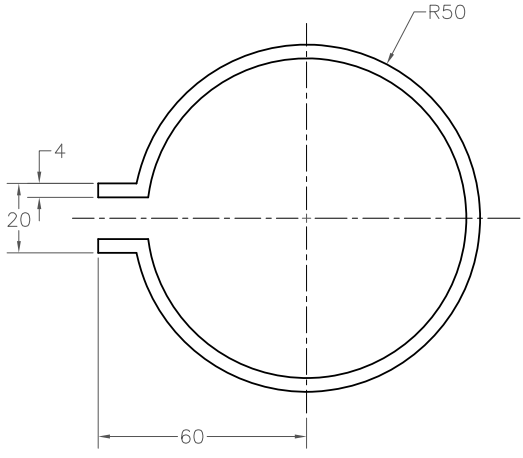

Figure 3-58 *Sketch for Tutorial 2*

Starting a New Document

1. Choose the **New** button from the Menu Bar to invoke the **New SolidWorks Document** dialog box.



2. The **Part** button is chosen by default in the **New SolidWorks Document** dialog box. Choose the **OK** button.

3. Choose the **Sketch** button from the **Sketch CommandManager** and select **Front Plane** to invoke the sketching environment.



4. Invoke the **Document Properties-Units** dialog box and change the units to **MMGS (millimeter, gram, second)**.

5. Invoke the **Document Properties - Grid/Snap** dialog box. Now, set **100** in the **Major grid spacing** spinner and **10** in the **Minor-lines per major** spinner.

Drawing the Centerline

Before drawing the sketch, you need to draw a centerline that will act as a reference for the other sketched entities. This centerline will also be used for mirroring.

1. Choose the **Centerline** button from the **Line** flyout in the **Sketch CommandManager**.

2. Move the cursor to a location whose coordinates are -70 mm, 0 mm, and 0 mm.

3. Specify this point as the start point and move the cursor horizontally toward the right.

Evaluation Copy. Do not reproduce. For information visit www.cadcim.com

4. Specify the endpoint of the centerline by clicking at a location when the value of the length of the centerline above the line cursor is 140.

5. Double-click anywhere in the drawing area to end the line creation and exit the **Centerline** tool.

Drawing the Outer Loop of the Sketch

Next, you need to draw the outer loop of the sketch using the sketch tools. As it is evident from Figure 3-58, the sketch need to be drawn using the **Circle** and **Line** tools.

1. Press and hold the right-mouse button and drag the cursor to the right; the sketching tools are displayed due to mouse gesture. Move the cursor over the **Circle** tool; the **Circle** tool is invoked and the **Circle PropertyManager** is displayed.

2. Make sure that the **Circle** button is chosen in the **Circle Type** rollout in the **Circle ProlertyManager**. Move the circle cursor to the origin and press the left mouse button when an orange circle is displayed to specify the center point of the circle.

3. Move the cursor horizontally toward the right and draw a circle of 100 mm diameter.

4. Choose the **Zoom to Fit** button from the **View (Heads-Up)** toolbar to increase the display of the sketch.

5. Choose the **Line** button from the **Sketch CommandManager** and move the cursor to a location whose coordinates are -60 mm, 10 mm, and 0 mm. Specify the start point of the line at this location.

6. Move the cursor horizontally toward the right and press the left mouse button to specify the endpoint of the line when the line cursor snaps the circle. Exit the **Line** tool.

7. Press and hold the SHIFT key and then using the left mouse button, select the horizontal line created in the last step and the centerline.

8. Choose the **Mirror Entities** button from the **Sketch CommandManager**; the mirror image of the horizontal line is created on the other side of the centerline. 

9. Choose the **Line** button using the mouse gesture, refer to Figure 3-59 and then move the cursor to the left endpoint of the upper horizontal line. Click to specify the start point of the line when the orange circle is displayed.

10. Move the cursor vertically downward. Click anywhere in the drawing area to specify the endpoint of the line when the cursor snaps to the left endpoint of the lower horizontal line.

11. Choose the **Trim Entities** button from the **Sketch CommandManager**; the **Trim PropertyManager** is displayed. 

Evaluation Copy. Do not reproduce. For information visit www.cadcim.com



Figure 3-59 *Line button in mouse gesture*

12. Choose the **Power trim** button. Press and hold the left mouse button and drag the cursor over the portion to be removed. Choose the **OK** button. The sketch after removing the unwanted portion is shown in Figure 3-60.



Tip. *If you have trimmed the centerline, invoke the shortcut menu and choose the* ***Extend Entities*** *option. Then, move the cursor over one end of the centerline and press the left mouse button to extend the line. Alternatively, perform the undo operation.*

Offsetting the Entities

After drawing the outer loop of the sketch, you need to draw the inner loop. The first step for drawing the inner loop of the sketch is offsetting the entire sketch inward.

1. Choose the **Offset Entities** button from the **Sketch CommandManager**; the **Offset Entities PropertyManager** is displayed on the left of the drawing area.

2. Set the value of the **Offset Distance** spinner to **4**. Select the **Add dimensions** and **Select chain** check boxes. Select any one entity of the sketch; the entire sketch is selected.



When you select the sketch, the preview of the offset sketch is displayed in the drawing area. But, the direction of the offset is outward of the sketch. The direction of the offset should be inward of the sketch. Therefore, you need to flip the direction.

3. Move the cursor inside the sketch and press the left mouse button to offset the sketch inside the original sketch; a dimension with the value 4 is displayed with the sketch.

The sketch after offsetting the outer loop is shown in Figure 3-61.

Evaluation Copy. Do not reproduce. For information visit www.cadcim.com

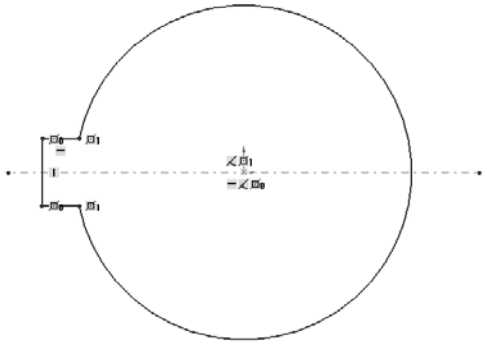

Figure 3-60 *The sketch after removing the unwanted portion*

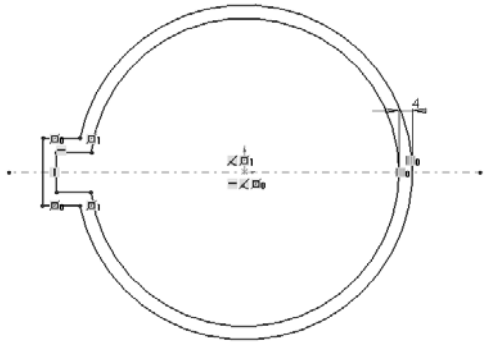

Figure 3-61 *Sketch after offsetting the outer loop*

Extending and Trimming the Entities

1. Choose the **Extend Entities** button from the **Trim Entities** flyout in the **Sketch CommandManager**; the select cursor is replaced by the extend cursor.



2. Move the cursor close to the left end of the lower horizontal line of the inner loop. You can preview the extended line in orange.

   You need to move the cursor a little toward the left, if the preview of the extended line appears on the right.

3. Press the left mouse button to extend the line.

4. Similarly, extend the upper horizontal line of the inner sketch. The sketch after extending the lines is shown in Figure 3-62.

5. Right-click and choose the **Trim Entities** option from the shortcut menu; the extend cursor is replaced by the select cursor.

6. Trim the unwanted entities as discussed earlier. The final sketch is shown in Figure 3-63.

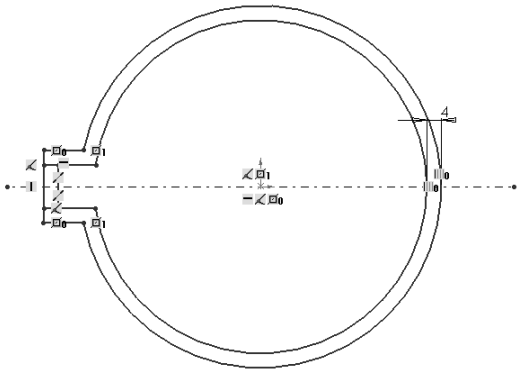

Figure 3-62 *Sketch after extending the lines*

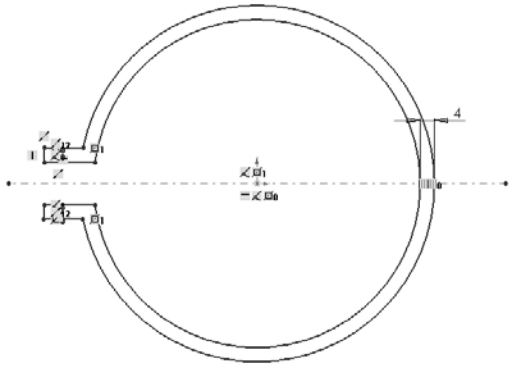

Figure 3-63 *Final sketch for Tutorial 2*

Evaluation Copy. Do not reproduce. For information visit www.cadcim.com



Tip. *You can turn on/off the display of the relation symbols on the sketched entities by choosing the* ***Hide/Show Items > View Sketch Relations*** *button from the* ***View (Heads-Up)*** *toolbar.*

Saving the Sketch

1. Choose the **Save** button from the Menu Bar to invoke the **Save As** dialog box.

2. Enter **c03_tut02** as the name of the document in the **File name** edit box and then choose the **Save** button.

3. Close the file by choosing **File** > **Close** from the SolidWorks menus.

Tutorial 3

In this tutorial, you will create the base sketch of the model shown in Figure 3-64. The sketch of the model is shown in Figure 3-65. You will create the sketch of the base feature by using the sketch tools. Also, you will modify and edit the sketch using various modifying options. Do not create the center marks and centerlines, as they are for your reference only.

(**Expected time: 30 min**)

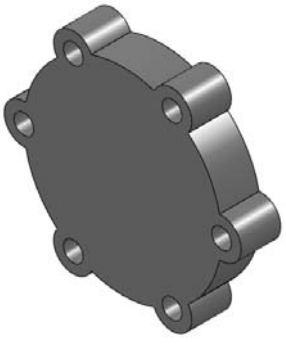

Figure 3-64 *Solid Model for Tutorial 3*

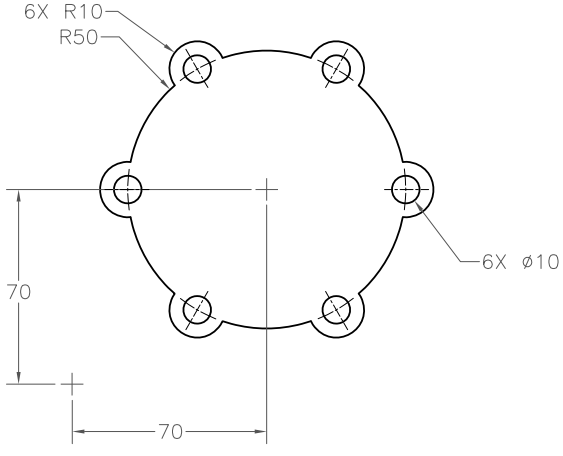

Figure 3-65 *Sketch for Tutorial 3*

The following steps are required to complete this tutorial:

a. Start a new part document.
b. Invoke the sketching environment.
c. Draw the outer loop of the sketch, refer to Figures 3-66 and 3-67.
d. Create a circle to define the hole in the outer loop.
e. Use the **Circular Sketch Pattern** tool to create a circular pattern of circles in the outer loop, refer to Figure 3-67.

Evaluation Copy. Do not reproduce. For information visit www.cadcim.com

Starting a New Document

1. Choose the **New** button from the Menu Bar to invoke the **New SolidWorks Document** dialog box.

2. In this dialog box, the **Part** button is chosen by default. Choose the **OK** button.

   Next, you need to invoke the sketching environment.

3. Choose the **Sketch** button from the **Sketch CommandManager**; the **Edit Sketch PropertyManager** is invoked and you are prompted to select the plane to create the sketch.

4. Select the **Front Plane** as the sketching plane; the sketching environment is invoked and the plane is oriented normal to the view.

5. Choose the **Options** button from Menu Bar; the **System Option - General** dialog box is displayed.

6. Choose the **Document Properties** tab from this dialog box and select the **Units** option from the area on the left. Set the units to millimeters by selecting the **MMGS (millimeter**, **gram**, **second)** option from the **Units system** area.

7. Next, choose the **Grid/Snap** option from the area on the left. Set the value of the **Minor-lines per major** spinner to **20** and the **Major grid spacing** spinner to **100**. Next, set the units to millimeters.

8. Choose the **OK** button after making the necessary settings.

Drawing the Outer Loop of the Sketch

It is evident from Figure 3-65, the sketch consists of the outer loop and inner cavities. It is recommended that you create the outer loop of the sketch first and then the inner cavities.

The origin of the sketching environment is in the middle of the drawing area and you need to create the sketch in the first quadrant. Therefore, it is recommended that you modify the drawing area by relocating the origin.

1. Press the CTRL key and the middle mouse button and drag the cursor in such a way that the origin of the sketch is moved near the lower left corner of the drawing area.

2. Press and hold the right mouse button and drag the cursor to the right; the sketching tools are displayed due to mouse gesture. Move the cursor over the **Circle** tool; the **Circle** tool is invoked and the **Circle PropertyManager** is displayed.

3. Make sure that the **Circle** button is chosen in the **Circle Type** rollout of the **Circle PropertyManager**.

Evaluation Copy. Do not reproduce. For information visit www.cadcim.com

4. Move the cursor to a location whose coordinates are **70** mm, **70** mm, and **0** mm.

5. Specify the center point of the circle at this location and move the cursor horizontally toward the right. When the diameter above the circle cursor shows the value **100**, press the left mouse button and exit the tool.

6. Choose the **Zoom to Area** button from the **View (Heads-Up)** toolbar. Press and hold the left mouse button and drag the cursor to define a window such that the sketched circle and the origin are placed in the window.



7. Release the left mouse button; the display area of the sketch is increased.

8. Invoke the **Circle** tool by using the mouse gesture and move the cursor to the right quadrant of the circle. All quadrants of the circle are displayed and the right quadrant on which you have placed the cursor is displayed in orange. Also, the symbol of coincident constraint is displayed below the cursor.

9. Specify the center point of the circle at this location and move the cursor horizontally toward the right. When the value of the diameter above the circle cursor shows 10, press the left mouse button.

10. Press the S key from the keyboard; a shortcut menu bar is displayed. Choose the **Trim Entities** button; the **Trim PropertyManager** is displayed. Next, choose the **Trim to closest** button from this PropertyManager.

11. Trim the sketch such that it looks similar to the one shown in Figure 3-66. Exit the **Trim** tool.

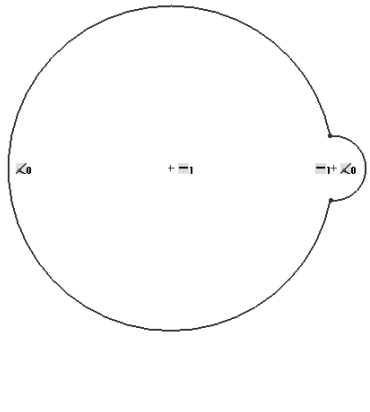

Figure 3-66 *Sketch after trimming the unwanted entities*

12. Select the trimmed circle of radius **10** mm and choose the **Circular Sketch Pattern** button from the **Linear Sketch Pattern** flyout in the **Sketch CommandManager**; the **Circular Pattern PropertyManager** is displayed and the preview of the circular pattern with the default setting is displayed in the drawing area.

On doing this, you will notice that the center of the circular pattern is placed at the origin and an arrow is displayed there indicating that the origin is the center of the circular pattern. But, in this sketch, the center of the circular pattern is not at the origin, so you need to modify it. This can be done by setting the coordinates of the point in the **Center X** and **Center Y** spinners in the **Parameters** rollout of this PropertyManager. However, it is recommended that you drag the arrow displayed at the center of the pattern to the required location.

Evaluation Copy. Do not reproduce. For information visit www.cadcim.com

13. Move the circular pattern cursor to the control point available at the end of the arrow.

14. Press and hold the left mouse button at the control point and drag it to the center of the **100** mm diameter circle. Release the left mouse button when an orange circle is displayed at the center point of the circle.

    You will notice that both the **Center X** and **Center Y** spinners display the value **70** mm. This is because the center of the **100** mm diameter circle is located at a distance of **70** mm along the X and Y axis directions.

15. Set **6** in the **Number of Instances** spinner.

16. Clear the **Dimension angular spacing** check box if it is selected.

17. Select the **Display instance count** check box. Accept the remaining default values and choose the **OK** button to create the pattern.

18. Trim the unwanted portion of the **100** mm diameter circle using the **Trim Entities** tool. You need to use the **Trim to closest** button for this trimming.

19. Choose **OK** after trimming. The outer loop of the sketch is created, as shown in Figure 3-67.

Sketching the Holes

Next, you need to draw the sketch of the holes. It is evident from Figure 3-65 that you need to create six circles. After drawing the first circle, you need to create the other five circles by creating a circular pattern of the parent circle.

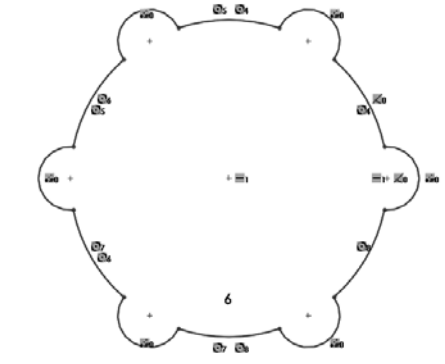

Figure 3-67 *Outer loop of the sketch*

1. Invoke the **Circle** tool by using the mouse gesture.

2. Select the center point of the **10** mm radius arc on the left quadrant of the larger circle as the center point of the new circle.

3. Press and hold the CTRL key and draw a circle of diameter close to **10**. Make sure you press the CTRL key so that the cursor does not snap to the points or grid.

4. Set **5** in the **Radius** spinner in the **Circle PropertyManager**.

Creating the Circular Pattern of the Holes

1. Choose the **Circular Sketch Pattern** button from the **Linear Sketch Pattern** flyout in the **Sketch CommandManager**; the **Circular Pattern PropertyManager** is

Evaluation Copy. Do not reproduce. For information visit www.cadcim.com

displayed and the preview of the circular pattern is displayed with an arrow at the center.

2. Move the circular pattern cursor to the control point that is available at the end of the arrow head indicating the center point of the pattern. Press and hold the left mouse button at the control point and drag it to the center of the **100** mm diameter circle. Release the left mouse button when an orange circle is displayed at the center point of the circle.

3. Set **6** in the **Number of Instances** spinner.

4. Clear the **Dimension angular spacing** check box.

5. Add the **Display instance count** check box. Accept the remaining default values and choose the **OK** button to create the pattern. The final sketch of the model is shown in Figure 3-68. In this figure, all relations are hidden for clarity.

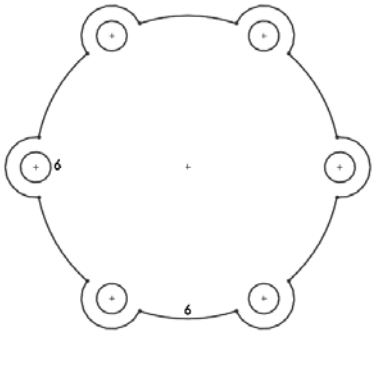

Figure 3-68 *Final sketch for Tutorial 3*

Saving the Sketch

1. Choose the **Save** button from the **Menu Bar** to invoke the **Save As** dialog box.

2. Enter the name of the document as **c03_tut03** in the **File name** edit box and choose the **Save** button.

   The document is saved at the location */Documents/SolidWorks/c03*.

3. Close the file by choosing **File** > **Close** from the SolidWorks menus.

Evaluation Copy. Do not reproduce. For information visit www.cadcim.com

SELF-EVALUATION TEST

Answer the following questions and then compare them to those given at the end of this chapter:

1. The **Trim Entities** tool is also used to extend the sketched entities. (T/F)

2. In the sketching environment, you can apply fillets to two parallel lines. (T/F)

3. You can apply a fillet to two nonparallel and non-intersecting entities. (T/F)

4. You cannot offset a single entity using the **Offset Entities** tool. (T/F)

5. You can choose **Insert > Customize** from the SolidWorks menus to display the **Customize** dialog box. (T/F)

6. The design intent is not captured in the sketch created using the mirror line. (T/F)

7. The _____ tool is used to create a linear pattern in the sketching environment of SolidWorks.

8. The _____ tool is used to create a circular pattern in the sketching environment of SolidWorks.

9. To modify a sketched circle, select it using the _____ tool.

10. The _____ tool is used to invoke dynamic mirroring.

REVIEW QUESTIONS

Answer the following questions:

1. You cannot trim the sketched entity using the **Trim Entities** tool. (T/F)

2. The preview of the entity to be extended is displayed in red. (T/F)

3. There are four types of slot tools available in SolidWorks. (T/F)

4. The sketched entities can be mirrored without using a centerline. (T/F)

5. The **Add angle dimension between axes** check box in the **Linear Pattern PropertyManager** is used to display the angular dimension between the two directions of a pattern. (T/F)

6. Which of the following PropertyManagers is displayed when you choose the **Sketch Fillet** button from the **Sketch CommandManager**?

   (a) **Sketch Fillet** (b) **Fillet**
   (c) **Surface Fillet** (d) **Sketching Fillet**

Evaluation Copy. Do not reproduce. For information visit www.cadcim.com

7. Which of the following PropertyManagers is displayed on the left of the drawing area when you choose **Tools > Sketch Tools > Chamfer** from the SolidWorks menus?

(a) **Sketch Chamfer** (b) **Sketcher Chamfer**
(c) **Sketching Chamfer** (d) **Chamfer**

8. Which of the following tools is used to create an automatic mirror line?

(a) **Dynamic Mirror Entities** (b) **Mirror**
(c) **Automatic Mirror** (d) None of these

9. Which of the following tools is used to break a sketched entity into two or more entities?

(a) **Split Entities** (b) **Trim Sketch**
(c) **Break Curve** (d) **Trim Curve**

10. Which of the following tools is used to create a circular pattern in SolidWorks?

(a) **Pattern** (b) **Circular Sketch Pattern**
(c) **Array** (d) None of these

EXERCISES

Exercise 1

Create the sketch of the model shown in Figure 3-69. The sketch of the model is shown in Figure 3-70. The solid model and dimensions are given for reference only.

(Expected time: 30 min)

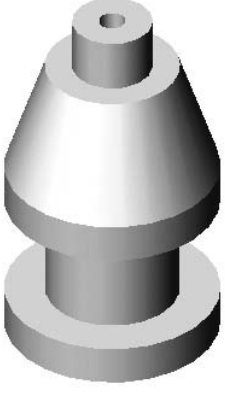

Figure 3-69 *Solid model for Exercise 1*

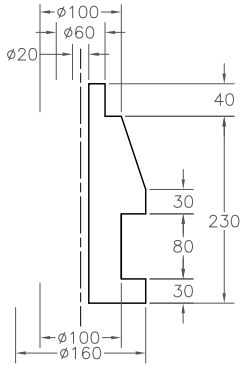

Figure 3-70 *Sketch for Exercise 1*

Evaluation Copy. Do not reproduce. For information visit www.cadcim.com

Exercise 2

Create the sketch of the model shown in Figure 3-71. The sketch of the model is shown in Figure 3-72. This model is created using a revolved feature. Therefore, you will create the sketch on one side of the centerline. The solid model and dimensions are given for reference only. (**Expected time: 30 min**)

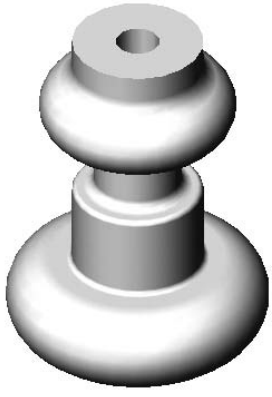

Figure 3-71 *Solid model for Exercise 2*

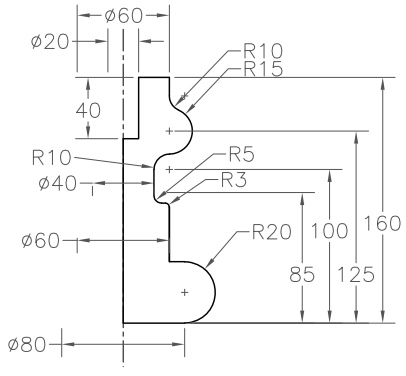

Figure 3-72 *Sketch for Exercise 2*

Exercise 3

Create the sketch of the model shown in Figure 3-73. The sketch of the model is shown in Figure 3-74. The solid model and dimensions are given only for reference. Create the sketch on one side and then mirror it on the other side. Make sure you do not use the **Dynamic Mirror** tool to draw this sketch. This is because if you draw the sketch using this tool, some relations are applied to the sketch. These relations interfere while creating fillets.

(**Expected time: 30 min**)

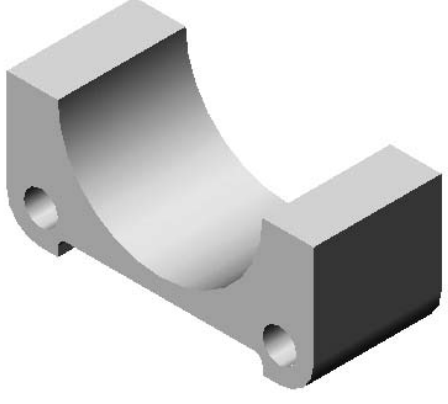

Figure 3-73 *Solid model for Exercise 3*

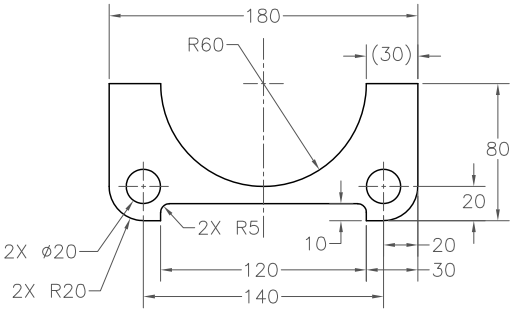

Figure 3-74 *Sketch for Exercise 3*

Evaluation Copy. Do not reproduce. For information visit www.cadcim.com

Exercise 4

Create the sketch of the model shown in Figure 3-75. The sketch of the model is shown in Figure 3-76. The solid model and dimensions are given only for reference. Create the sketch using the sketching tools and then edit the sketch using the **Circular Pattern** and **Trim** tools. (**Expected time: 30 min**)

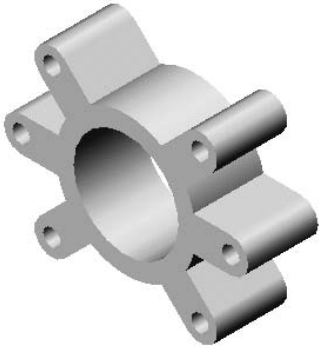

Figure 3-75 *Solid model for Exercise 4*

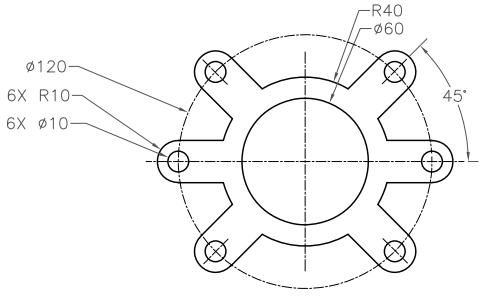

Figure 3-76 *Sketch for Exercise 4*

Exercise 5

Create the sketch of the model shown in Figure 3-77. The sketch of the model is shown in Figure 3-78. The solid model and dimensions are given only for reference. Create the sketch using the **Offset Entities** tool. Make sure that the **Reverse** check box is selected.

(**Expected time: 30 min**)

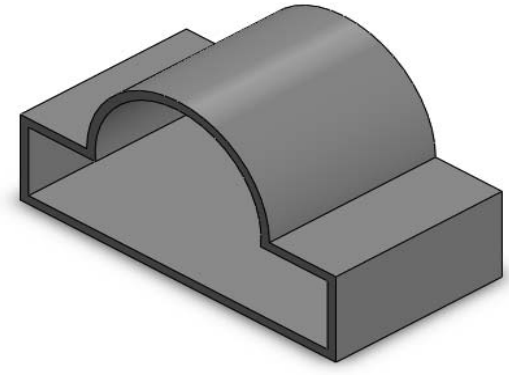

Figure 3-77 *Solid model for Exercise 5*

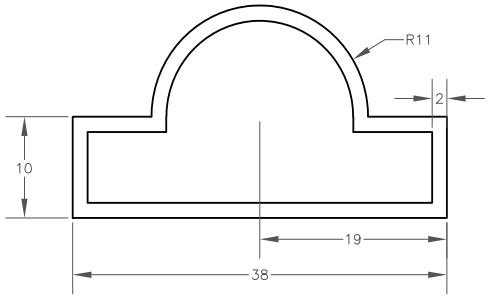

Figure 3-78 *Sketch for Exercise 5*

Answers to Self-Evaluation Test

1. T, **2.** F, **3.** T, **4.** F, **5.** F, **6.** F, **7. Linear Sketch Pattern**, **8. Circular Sketch Pattern**, **9. Select**, **Circle**, **10. Dynamic Mirror Entities**

Evaluation Copy. Do not reproduce. For information visit www.cadcim.com