3

Extended Primitives

Learning Objectives

After completing this chapter, you will be able to:

- *Understand Bend modifier*
- *Understand Taper modifier*
- *Create extended primitives*



INTRODUCTION

In this chapter, you will learn to create complex 3D shapes using the extended primitives. Also, you will learn the usage of the **Bend** and **Taper** modifiers as well as different snap controls in detail.

MODIFIERS

In Autodesk 3ds Max, modifiers are used to modify and apply various types of functions or effects on an object. There are different types of modifiers that perform different functions about which you will learn in the later chapters. In this section, you will learn about the **Bend** and **Taper** modifiers.

Bend Modifier

The **Bend** modifier is used to bend an object in the X, Y, or Z axis. To apply the **Bend** modifier on an object, select the object and choose **Modifiers > Parametric Deformers > Bend** from the menu bar. Alternatively, you can select the object in the viewport and choose the **Modify** tab in the **Command Panel**; the **Modifiers List** drop-down list will be displayed. Select **Object-Space Modifiers > Bend** from the **Modifier List** drop-down list; the **Bend** modifier will be displayed in the modifier stack, as shown in Figure 3-1. Also, the **Parameters** rollout will be displayed in the Modify panel, as shown in Figure 3-2. The areas in the **Parameters** rollout are discussed next.

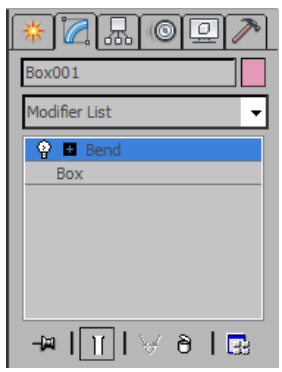

Figure 3-1 *The* ***Bend*** *modifier displayed in the modifier stack*

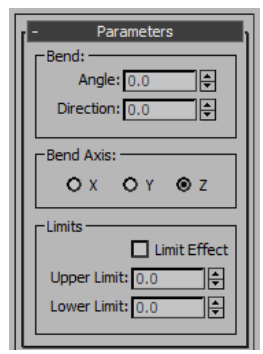

Figure 3-2 *The* ***Parameters*** *rollout of the* ***Bend*** *modifier*

Bend Area

The **Bend** area is used to set the parameters to bend an object. The value in the **Angle** spinner is used to define the angle of the bend along the X, Y, or Z axis. The value in the **Direction** spinner is used to define the direction of the bend.

Bend Axis Area

The **Bend Axis** area is used to define the axis, which needs to be bent. Note that the axis to be bent should be local to the bend gizmo, instead of the selected object.

Evaluation Copy. Do not reproduce. For information visit www.cadcim.com

Limits Area

The options in the **Limits** area are used to apply constraints to the bend effect. Select the **Limit Effect** check box to make the options in this area active. The default value in the **Upper Limit** and **Lower Limit** spinners is zero. The values in the **Lower Limit** and **Upper Limit** spinners are the distances from the modifier's center point, beyond which the modifier cannot affect the object.

Taper Modifier

The **Taper** modifier is used to taper an object by scaling it on both sides. On applying this modifier, one side of the object will be scaled up and another will be scaled down by an equal amount. To apply the **Taper** modifier on an object, choose **Modifiers > Parametric Deformers > Taper** from the menu bar; the **Taper** modifier will be displayed in the modifier stack, as shown in Figure 3-3. Also, the **Parameters** rollout will be displayed in the Modify panel, as shown in Figure 3-4. The areas in this rollout are discussed next.

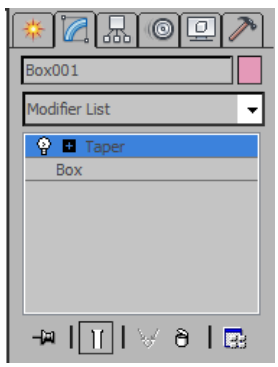

Figure 3-3 *The* ***Taper*** *modifier in the modifier stack*

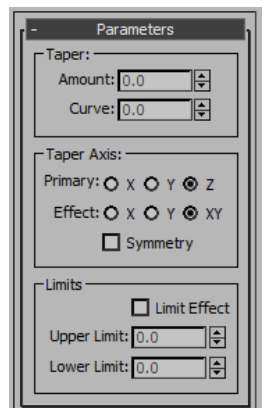

Figure 3-4 *The* ***Parameters*** *rollout of the* ***Taper*** *modifier*

Taper Area

The **Taper** area is used to set the parameters for scaling the shape of an object. The value in the **Amount** spinner in the **Taper** area is used to define the amount of taper. The value in the **Curve** spinner is used to define the curve applied to the gizmo, and it helps in creating different shapes of the taper. You can set the values of the **Amount** and **Curve** spinners from -10.0 to 10.0.

Taper Axis Area

You can define the central axis by selecting the **X**, **Y**, or **Z** radio button in the **Primary** group of this area. The **Effect** group is used to define the direction of the taper from the primary axis. The radio buttons under the **Effect** group change according to the selection of the primary axis. Select the **Symmetry** check box to create a symmetrical taper around the primary axis.

Limits Area

This area is the same as discussed in the **Bend** modifier.

Evaluation Copy. Do not reproduce. For information visit www.cadcim.com

EXTENDED PRIMITIVES



In Autodesk 3ds Max, there are some complex 3D geometric shapes, which can be used to create complex 3D objects. These shapes are known as extended primitives. The extended primitives are chamfer box, spindle, hedra, and so on. All extended primitives can be created dynamically using the mouse. Some of the extended primitives can also be created by entering the parameters in the **Keyboard Entry** rollout.



Note

*The hedra, ringwave, and hose extended primitives cannot be created using the keyboard, therefore, they do not have the **Keyboard Entry** rollout.*

To create the extended primitives, you need to choose **Create > Geometry** in the **Command Panel**; a drop-down list will be displayed with the **Standard Primitives** option selected by default in it. Now, select the **Extended Primitives** option from the drop-down list. Activate the viewport in which you want to create the primitives by clicking in it. Then, choose the corresponding tool from the **Object Type** rollout. In this section, you will learn to create and modify the extended primitives using various tools available in the **Object Type** rollout.

Creating a Hedra

Menu bar:	Create > Extended Primitives > Hedra
Command Panel:	Create > Geometry > Extended Primitives > Object Type rollout > Hedra

To create a hedron, activate the viewport by clicking in it and make sure that the **Extended Primitives** option is selected from the drop-down list in the **Command Panel**. Now, choose the **Hedra** tool from the **Object Type** rollout; the **Name and Color** and **Parameters** rollouts will be displayed, as shown in Figure 3-5. Now, press and hold the left mouse button in the viewport to define the center point of the hedron, and then drag the cursor to define its radius. Release the left mouse button to get the desired radius; a hedron will be created, as shown in Figure 3-6.

Various rollouts used to create and modify the hedron are discussed next.



Tip: *If you are creating an extended primitive that requires multiple steps, you can pan or orbit the viewport between the steps. To pan the viewport, drag the cursor with the middle-mouse button or mouse wheel held down. To rotate the viewport, press and hold the ALT key and then drag the cursor with middle-mouse button or mouse wheel held down.*



Note

*The options in the **Name and Color** rollout of all the extended primitives are the same as those discussed in the **Box** tool of Chapter 2.*



*After creating an extended primitive, if you right-click in the viewport to exit the tool, the **Parameters** rollout will disappear from the **Create** tab. In such a case, to modify the parameters of the primitive, select the primitive in the viewport and choose the **Modify** tab in the **Command Panel**; the **Parameters** rollout will appear again.*

Evaluation Copy. Do not reproduce. For information visit www.cadcim.com

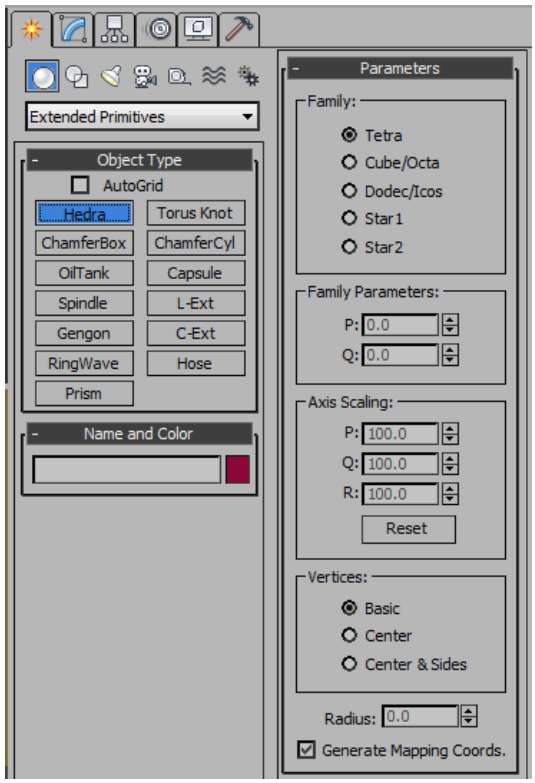

Figure 3-5 *Various rollouts to create a hedron*



Figure 3-6 *A hedron created in the viewport*

Parameters Rollout

The parameters in this rollout are discussed next.

Family Area

The **Family** area is used to define various types of hedra, refer to Figure 3-7. By default, the **Tetra** radio button is selected, which is used to create a tetrahedron. Select the **Cube/Octa** radio button to create a cube or octahedron depending on the value you enter in the spinners in the **Family Parameters** area. Select the **Dodec/Icos** radio button to create a dodecahedron or icosahedron, which again depends on the value that you enter in the **Family Parameters** area. Select the **Star1** and **Star2** radio buttons to create two different star-like polyhedra.

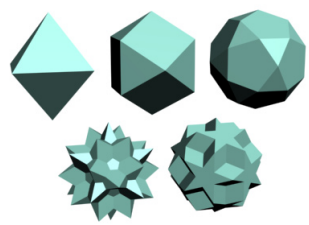

Figure 3-7 *Five basic shapes of hedra*

Evaluation Copy. Do not reproduce. For information visit www.cadcim.com

Evaluation Copy. Do not reproduce. For information visit www.cadcim.com

Family Parameters Area

The two spinners in this area, **P** and **Q**, are used to modify the vertices and facets of a polyhedron. They are related to each other and their combined value can be equal to or less than 1.0. When you set maximum values in **P** and **Q** spinners, one parameter represents all vertices while the other represents all facets.

Axis Scaling Area

A polyhedron can have three shapes of polygonal facets: triangle, square, and pentagon. The **P**, **Q**, and **R** spinners in this area control the axis of reflection for one of the facets of a polyhedron. By default, the value in these spinners is 100.0. If you change the values in these spinners, they will push the facets in the object or out of the object. On choosing the **Reset** button, the values in these spinners will be reset to 100.0.

Vertices Area

The **Vertices** area determines the internal geometry of each face of the polyhedron. By default, the **Basic** radio button is selected. As a result, facets are not subdivided and thus have minimum vertices. Select the **Center** radio button to place an additional vertex at the center of each facet, thus joining the corresponding facet corners. Select the **Center and Side** radio button to place an additional vertex at the center of each facet, thus joining the corners and center of edges of the corresponding facet. To see the internal edges, you need to apply the **Edit Mesh** modifier to the polyhedron object. You will learn about the **Edit Mesh** modifier in the later chapters.

Radius

Set the value in the **Radius** spinner to modify the radius of a polyhedron.

Creating a Chamfer Box

Menu bar:	Create > Extended Primitives > Chamfer Box
Command Panel:	Create > Geometry > Extended Primitives > Object Type rollout > ChamferBox

The chamfer box is similar to the box in the standard primitives. The only difference is that a chamfer box has beveled or rounded edges. To create a chamfer box, activate the viewport and choose the **ChamferBox** tool from the **Object Type** rollout; the **Name and Color**, **Creation Method**, **Keyboard Entry**, and **Parameters** rollouts will be displayed, as shown in Figure 3-8.

Now, press and hold the left mouse button on a point in the viewport for defining the first corner of the chamfer box, and drag the cursor to define its length and width. Release the left mouse button to get the desired length and width. Next, move the cursor up or down to define its height, and click on the viewport to get the desired height. Then, move the cursor to define the fillet and click on the viewport to get the fillet or chamfer; a chamfer box will be created, as shown in Figure 3-9.

Various rollouts used to create and modify a chamfer box are discussed next.

Creation Method Rollout

The options in this rollout are used for creating a chamfer box dynamically. Select the **Cube** radio button to create a chamfer box of equal length, width, and height. Select the **Box** radio button to create a chamfer box having different length, width, and height.

Parameters Rollout

The options in this rollout are used to modify the chamfer box. Enter the new values in the **Length**, **Width**, **Height**, and **Fillet** spinners. The values in the **Length Segs**, **Width Segs**, and **Height Segs** spinners are used to define the number of segments along the length, width, and height of the chamfer box, respectively. The value in the **Fillet Segs** spinner specifies the number of segments in the fillet of the chamfer box.

Select the **Smooth** check box, if it is not already selected, to create a chamfer box with rounded edges, as shown in Figure 3-9. If this check box is cleared, a chamfer box with beveled edges will be created, as shown in Figure 3-10.

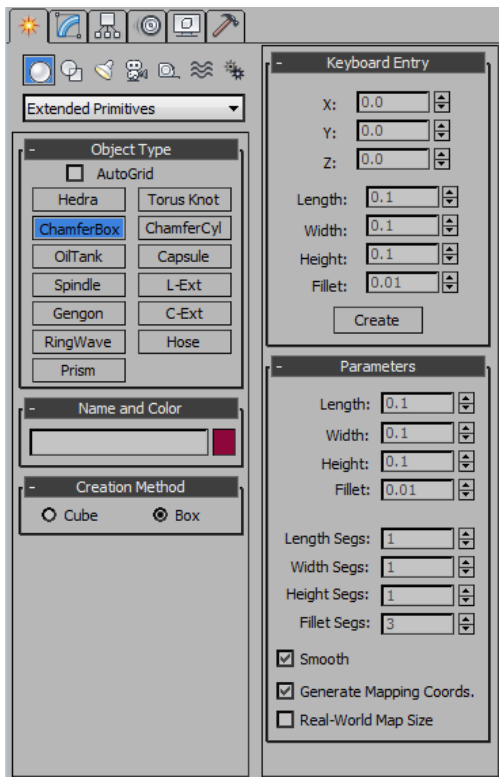

Figure 3-8 *Various rollouts to create a chamfer box*

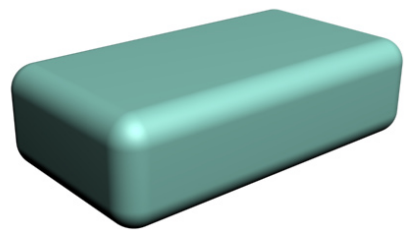

Figure 3-9 *A chamfer box with rounded edges*

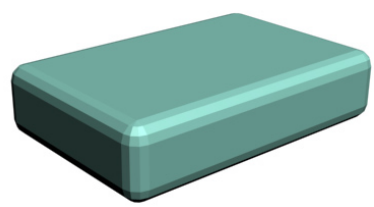

Figure 3-10 *A chamfer box with beveled edges*

Evaluation Copy. Do not reproduce. For information visit www.cadcim.com

Creating a Chamfer Cylinder

Menu bar:	Create > Extended Primitives > Chamfer Cylinder
Command Panel:	Create > Geometry > Extended Primitives > Object Type rollout > ChamferCyl

The chamfer cylinder is similar to the cylinder in the standard primitives. The only difference is that the chamfer cylinder has beveled or rounded edges. To create a chamfer cylinder, activate the viewport and choose the **ChamferCyl** tool from the **Object Type** rollout; the **Name and Color**, **Creation Method**, **Keyboard Entry**, and **Parameters** rollouts will be displayed, as shown in Figure 3-11.

Next, press and hold the left mouse button on a point in the viewport for defining the center of the base of the cylinder, and drag the cursor to define its radius. Release the left mouse button and move the cursor up or down to define its height. Click on the screen to get the desired height and move the cursor to define the fillet. Again, click on the screen to get the desired fillet; a chamfer cylinder will be created, as shown in Figure 3-12.

Various rollouts used to create and modify a chamfer cylinder are discussed next.

Creation Method Rollout

The options in this rollout are the same as those discussed while creating the sphere in Chapter 2.

Parameters Rollout

The options in this rollout are used to modify the chamfer cylinder. Enter new values of the radius, height, and fillet in their respective spinners. The value in the **Height Segs** spinner is used to define the number of segments along the height of the chamfer cylinder. Similarly, the value in the **Fillet Segs** spinner is used to define the number of segments in the fillet area of the chamfer cylinder. The value in the **Sides** spinner specifies the number of sides of the chamfer cylinder. The **Cap Segs** spinner is used to define the number of segments on each end of the cylinder. Select the **Smooth** check box to create a chamfer cylinder with rounded edges. If this check box is cleared, a chamfer cylinder with beveled edges will be created, as shown in Figure 3-13. The options available on selecting the **Slice On** check box are the same as those discussed in Chapter 2.

Creating a Capsule

Menu bar:	Create > Extended Primitives > Capsule
Command Panel:	Create > Geometry > Extended Primitives > Object Type rollout > Capsule

To create a capsule, activate the viewport and choose the **Capsule** tool from the **Object Type** rollout; the **Name and Color**, **Creation Method**, **Keyboard Entry**, and **Parameters** rollouts will be displayed, as shown in Figure 3-14.

Evaluation Copy. Do not reproduce. For information visit www.cadcim.com

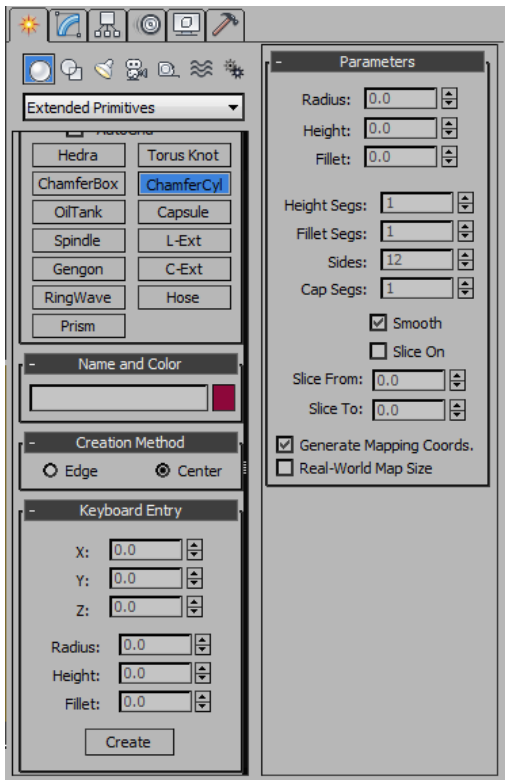

Figure 3-11 *Various rollouts to create a chamfer cylinder*

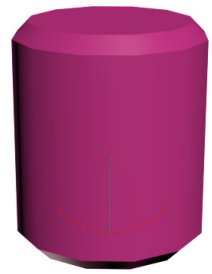

Figure 3-12 *A chamfer cylinder created in the viewport*



Figure 3-13 *A chamfer cylinder with beveled edges*

Now, press and hold the left mouse button in the viewport to specify the center of the first face and drag the cursor to define the radius of the capsule. Release the left mouse button and move the cursor up or down to define the height of the capsule. Click on the screen to get the desired height; a capsule will be created, as shown in Figure 3-15.

Various rollouts used to create and modify the capsule are discussed next.

Creation Method Rollout

The options in this rollout are the same as those discussed in the previous chapter.

Parameters Rollout

The options in this rollout are used to modify the dimensions of the capsule. The values in the **Radius** and **Height** spinners specify the radius and height of the capsule, respectively. Select the **Overall** radio button to specify the overall height of the capsule. Select the **Centers** radio button to specify the height of the capsule excluding the height of the convex cap. The **Sides** spinner specifies the number of sides around the capsule. The value in the **Height Segs** spinner defines the number of segments along the height of the capsule. By default, the **Smooth** check box is selected, therefore the surface of the capsule will be smooth. The options available on selecting the **Slice On** check box are the same as those discussed in the previous chapter.

Evaluation Copy. Do not reproduce. For information visit www.cadcim.com

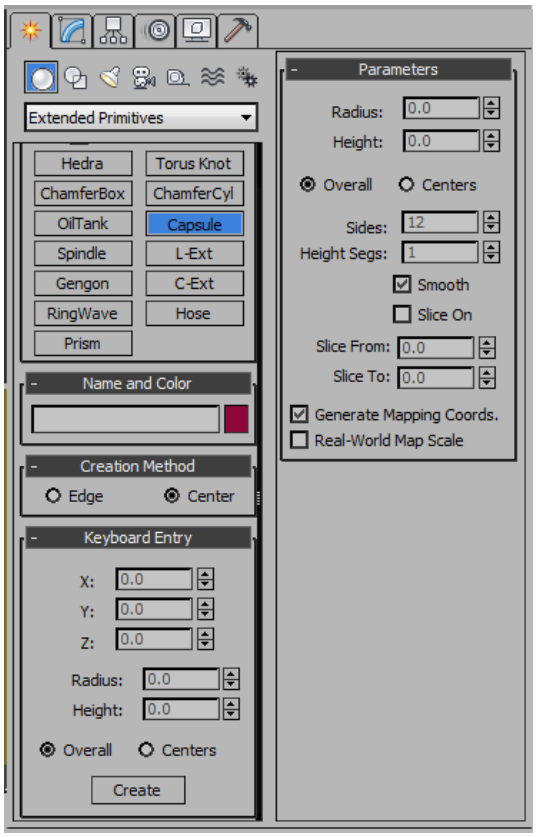

Figure 3-14 *Various rollouts to create a capsule*



Figure 3-15 *A capsule created in the viewport*

Creating a Spindle

Menu bar:	Create > Extended Primitives > Spindle
Command Panel:	Create > Geometry > Extended Primitives > Object Type rollout > Spindle

A spindle is a type of cylinder with conical caps. To create a spindle, activate the viewport and choose the **Spindle** tool from the **Object Type** rollout; the **Name and Color**, **Creation Method**, **Keyboard Entry**, and **Parameters** rollouts will be displayed, as shown in Figure 3-16. Now, press and hold the left mouse button in the viewport to specify the center of the first face and drag the cursor to define the radius of the spindle. Release the left mouse button and move the cursor up or down to define the height of the spindle. Click in the viewport to get the desired height and move the cursor again to define the height of the conical caps. Next, click in the viewport again; a spindle will be created, as shown in Figure 3-17.

Evaluation Copy. Do not reproduce. For information visit www.cadcim.com

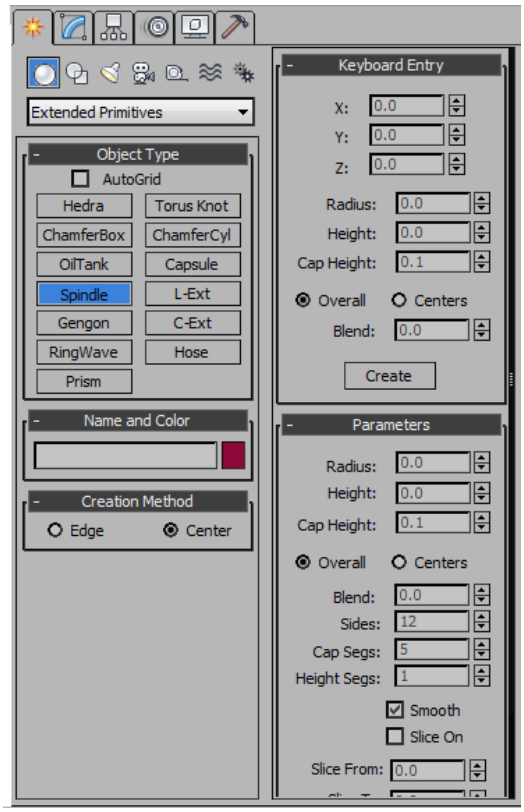

Figure 3-16 *Various rollouts to create a spindle*



Figure 3-17 *A spindle created in the viewport*

Various rollouts used to create and modify the spindle are discussed next.

Creation Method Rollout

The options in this rollout are the same as those discussed in the previous chapter.

Parameters Rollout

The options in this rollout are used to modify the dimensions of the spindle. To do so, select the spindle and choose the **Modify** tab in the **Command Panel**; the **Parameters** rollout will be displayed. Set the new values in the spinners to modify the spindle.

Creating an L-Ext

Menu bar:	Create > Extended Primitives > L-Extrusion
Command Panel:	Create > Geometry > Extended Primitives > Object Type rollout > L-Ext

The L-Ext or L-Extrusion is an L-shaped object. To create an L-Ext, activate the viewport and choose the **L-Ext** tool from the **Object Type** rollout; the **Name and Color**, **Creation Method**, **Keyboard Entry**, and **Parameters** rollouts will be displayed, as shown in Figure 3-18.

Evaluation Copy. Do not reproduce. For information visit www.cadcim.com

Now, press and hold the left mouse button in the viewport and drag the cursor to define the overall length and width of the object. Release the left mouse button and move the cursor up or down to define the height of the L-Ext. Click in the viewport to get the desired height. Move the cursor again to define the thickness of the L-Ext and click in the viewport; an L-Ext will be created, as shown in Figure 3-19.

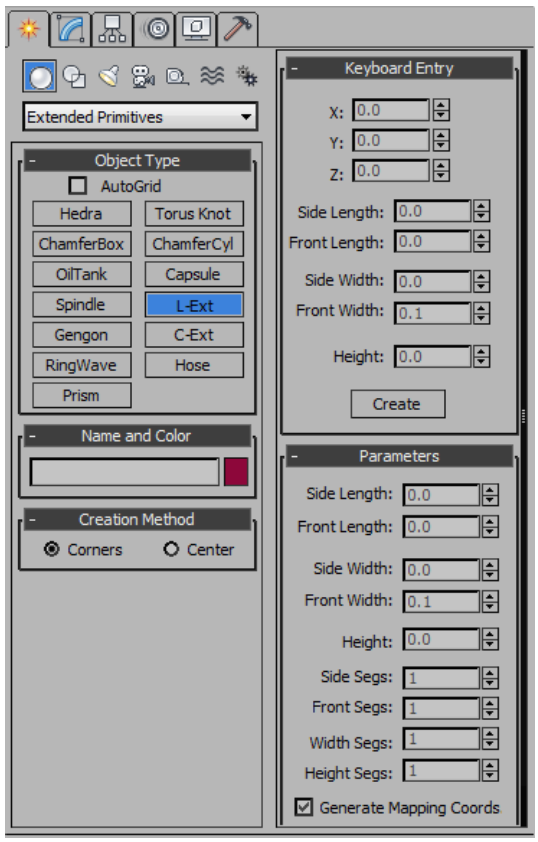

Figure 3-18 *Various rollouts to create an L-Ext*

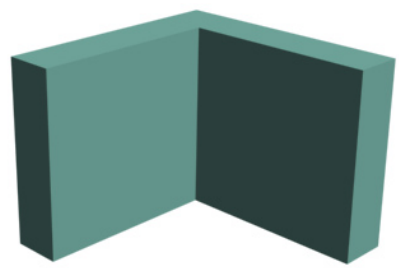

Figure 3-19 *An L-Ext created in the viewport*

Various rollouts used to create and modify the L-Ext are discussed next.

Creation Method Rollout

The options in this rollout are used for creating an L-Ext dynamically. Select the **Corners** radio button to create the L-Ext from one corner to another. Select the **Center** radio button to create the L-Ext from its center to the outward direction.

Parameters Rollout

The options in this rollout are used to modify the L-Ext. Set the new values in the spinners. The values in the **Side Length** and **Front Length** spinners are used to define the overall length of the L-Ext. Similarly, the values in the **Side Width** and **Front Width** spinners specify the overall width of the L-Ext. The value in the **Height** spinner is used to specify the height of the

Evaluation Copy. Do not reproduce. For information visit www.cadcim.com

L-Ext. The values in the **Side Segs** and **Front Segs** spinners are used to define the number of vertical segments on the sides of the L-Ext. The value in the **Width Segs** spinner specifies the number of segments on the width or thickness of the L-Ext; whereas, the value in the **Height Segs** spinner specifies the number of segments along the height of the L-Ext.

Creating a Gengon

Menu bar:	Create > Extended Primitives > Gengon
Command Panel:	Create > Geometry > Extended Primitives > Object Type rollout > Gengon

To create a gengon, activate the viewport and choose the **Gengon** tool from the **Object Type** rollout; the **Name and Color**, **Creation Method**, **Keyboard Entry**, and **Parameters** rollouts will be displayed, as shown in Figure 3-20. Now, press and hold the left mouse button in the viewport and drag the cursor to define the radius of the object. Release the left mouse button and move the cursor up or down to define the height of the gengon. Click in the viewport to get the desired height and move the cursor again to define the size of the fillet of the gengon. Next, click in the viewport; a gengon will be created, as shown in Figure 3-21.

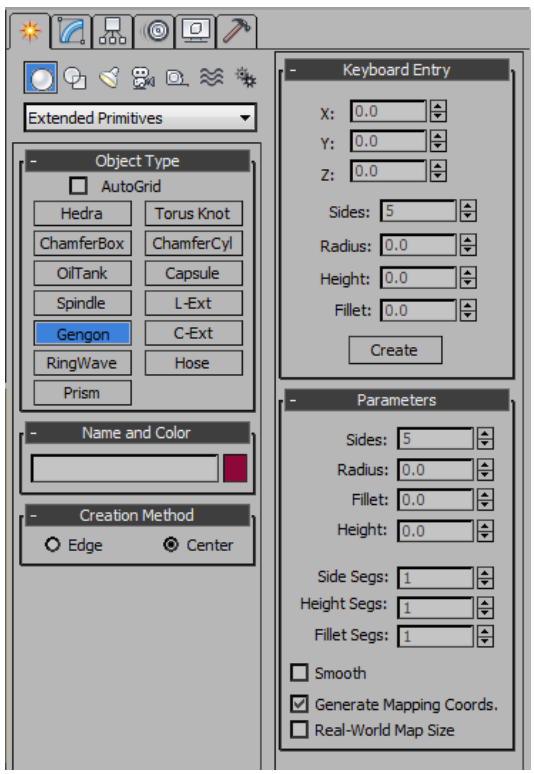

Figure 3-20 *Various rollouts to create a gengon*

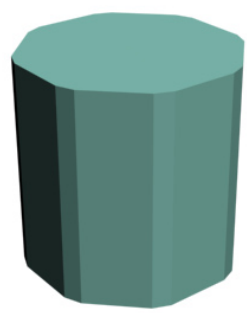

Figure 3-21 *A gengon created in the viewport*

Various rollouts used to create and modify the gengon are discussed next.

Evaluation Copy. Do not reproduce. For information visit www.cadcim.com

Creation Method Rollout

The options in this rollout are the same as those discussed in the **Sphere** tool of the previous chapter.

Parameters Rollout

The options in this rollout are used to modify the dimensions of gengon. To do so, select the gengon and choose the **Modify** tab in the **Command Panel**; the **Parameters** rollout will be displayed. Enter new values of the sides, radius, fillet, and height in their respective spinners. Similarly, enter new values in the **Side Segs**, **Height Segs**, and **Fillet Segs** spinners to define the segments on the sides, height, and fillet of the gengon, respectively. Select the **Smooth** check box to smoothen the faces of the gengon.

Creating a RingWave

Menu bar:	Create > Extended Primitives > RingWave
Command Panel:	Create > Geometry > Extended Primitives > Object Type rollout > RingWave

A ringwave is a ring-shaped object that can have irregular inner and outer edges that can be animated. To create a ringwave, activate the viewport and choose the **RingWave** tool from the **Object Type** rollout; the **Name and Color** and **Parameters** rollouts will be displayed, as shown in Figures 3-22 and 3-23.

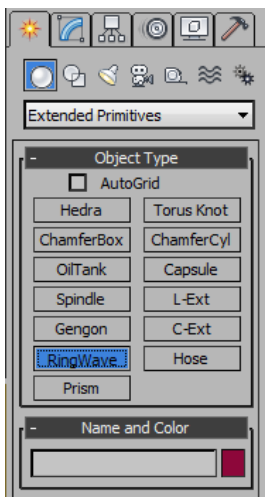

Figure 3-22 *The* ***Name and Color*** *rollout*

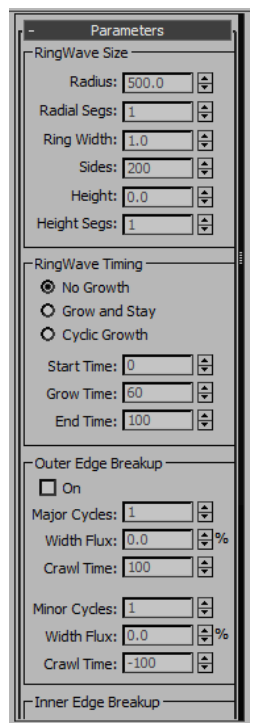

Figure 3-23 *Partial view of the* ***Parameters*** *rollout of the ringwave*

Evaluation Copy. Do not reproduce. For information visit www.cadcim.com

Now, press and hold the left mouse button on a point in the viewport to specify the center of the ringwave and drag the cursor to define its radius. Release the left mouse button and move the cursor to define the width of the ringwave. Click in the viewport to get the desired radius of the object; a ringwave will be created, as shown in Figure 3-24.



Figure 3-24 *A ringwave created in the viewport*



Tip. *After creating the ringwave, you can view its basic animation by dragging the time slider on the track bar or by choosing the* ***Play Animation*** *button from the animation playback controls.*

The rollouts used to create and modify the ringwave are discussed next.

Parameters Rollout

The options in this rollout are used to modify the ringwave. To do so, select the ringwave and choose the **Modify** tab in the **Command Panel**. Now, expand the **Parameters** rollout and enter the new values in the spinners. The areas in this rollout are discussed next.

RingWave Size Area

In the **RingWave Size** area, the **Radius** spinner is used to define the outer radius of the ringwave. The **Radial Segs** spinner specifies the number of segments between the inner and outer surfaces along the circumference of the ringwave. The **Ring Width** spinner used to specify the width of the inner ring. The value in the **Sides** spinner specifies the number of sides around the circumference of the ringwave. The **Height** spinner specifies the height of the ringwave and the **Height Segs** spinner specifies the number of segments along its height.

RingWave Timing Area

The **RingWave Timing** area is used to animate the ringwave. The ringwave grows from the value 0 to the value specified in the **Radius** spinner of the **RingWave Size** area. Select the **No Growth**, **Grow and Stay**, or **Cyclic Growth** radio button to define the pattern of the ringwave growth. The values in the **Start Time**, **Grow Time**, and **End Time** spinners are used to specify the number of frames at which the ring wave starts appearing, reaches to its full size, and disappears, respectively.

On selecting the **No Growth** radio button, the ringwave will not grow over the time. It just appears at the frame number specified in the **Start Time** spinner and disappears after the frame number specified in the **End Time** spinner. Select the **Grow and Stay** radio button to animate a single growth cycle. In this case, the ringwave starts growing at the frame number specified in the **Start Time** spinner, grows up to its maximum radius in the number of frames specified in the **Grow Time** spinner, and disappears at the frame number specified in the **End Time** spinner. On selecting the **Cyclic Growth** radio button,

Evaluation Copy. Do not reproduce. For information visit www.cadcim.com

the ringwave animates repeatedly. In this case, the ringwave starts growing in the frame number specified in the **Start Time** spinner, grows up to its maximum radius in the number of frames specified in the **Grow Time** spinner, and continues to grow up further up to the frame specified in the **End Time** spinner.

Outer Edge Breakup Area

The **Outer Edge Breakup** area is used to change the shape of the outer edge of the ringwave and define the breakup of the outer edge. To activate the options in this area, you need to select the **On** check box. The **Major Cycles** spinner specifies the number of major waves around the outer edge of the ringwave. The **Width Flux** spinner specifies the size of the major wave in percentage. The **Crawl Time** spinner specifies the number of frames in which a single major wave moves around the outer circumference of the ringwave.

The **Minor Cycles** spinner is used to define the number of small and random-sized waves in each major wave. The **Width Flux** spinner specifies the size of the smaller waves in percentage. The **Crawl Time** spinner specifies the number of frames in which a single minor wave moves around its respective major wave.

Inner Edge Breakup Area

The **Inner Edge Breakup** area is used to change the shape of the inner edge of the ringwave. Also, it defines the breakup of the inner edge. To activate the options in this area, you need to select the **On** check box. The **Inner Edge Breakup** area has the same options for defining the inner edge of the ringwave as those discussed in the **Outer Edge Breakup** area for defining the outer edge of the ringwave.

Surface Parameters Area

The **Texture Coordinates** and **Smooth** check boxes are selected by default in the **Surface Parameters** area. The **Texture Coordinates** check box is used to define the required coordinates for the mapped-material on the ringwave. The **Smooth** check box is used to smoothen the ringwave.

Creating a Hose

Menu bar:	Create > Extended Primitives > Hose
Command Panel:	Create > Geometry > Extended Primitives > Object Type rollout > Hose

A hose is an extended primitive that can link two objects. It reacts to the movement of linked objects. To create a hose, activate the viewport and choose the **Hose** tool from the **Object Type** rollout; the **Name and Color** and **Hose Parameters** rollouts will be displayed, as shown in Figures 3-25 and 3-26. Now, press and hold the left mouse button in the viewport to specify the center of the hose and drag the cursor to define its radius. Release the left mouse button and move the cursor up or down to define the height of the hose. Click on the screen to get the desired height of the hose; a hose will be created, as shown in Figure 3-27.

The rollouts used to create and modify a hose are discussed next.

Evaluation Copy. Do not reproduce. For information visit www.cadcim.com

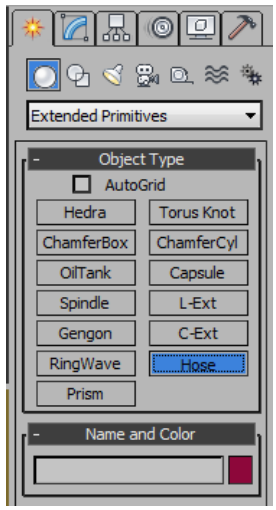

Figure 3-25 *The* ***Name and Color*** *rollout*

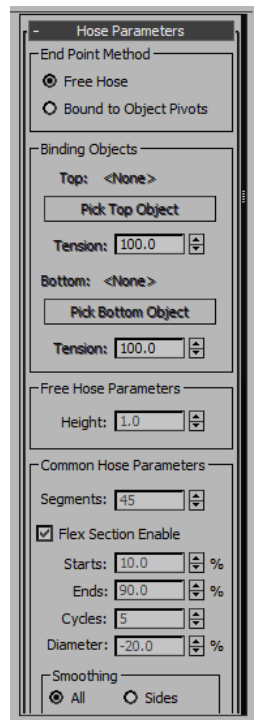

Figure 3-26 *Partial view of the* ***Hose Parameters*** *rollout*

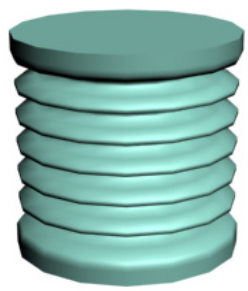

Figure 3-27 *A hose created in the viewport*

Hose Parameters Rollout

The options in this rollout are used to modify the hose. To do so, select the hose and choose the **Modify** tab in the **Command Panel**; the **Parameters** rollout will be displayed. Set the new values in the spinners in this rollout. The different areas in this rollout are discussed next.

End Point Method Area

In the **End Point Method** area, select the **Free Hose** radio button to create a free hose. You can modify the height of the free hose by setting the value in the **Height** spinner of the **Free Hose Parameters** area. If you want to bind the hose with two objects, then you

Evaluation Copy. Do not reproduce. For information visit www.cadcim.com

need to select the **Bound to Object Pivots** radio button in the **End Point Method** area. On selecting this radio button, the options in the **Binding Objects** area will be enabled.

Binding Objects Area

The options in this area are used to bind two objects to the hose at the pivot point of these objects. To do so, choose the **Pick Top Object** button in the **Binding Objects** area and move the cursor over the object that you want to bind with the top of the hose; a selection cursor will be displayed. Select the object in the viewport to bind it at the top of the hose. Choose the **Pick Bottom Object** button in this area and move the cursor over another object that you want to bind with the bottom of the hose; a selection cursor will be displayed. Select the object in the viewport to bind it at the bottom of the hose. When you select the objects for the top and bottom of the hose, the name of these objects will be displayed in the **Top** and **Bottom** labels. The value in the **Tension** spinner is used to control the tension between the bend in the hose and the top or bottom objects.

Common Hose Parameters Area

In the **Common Hose Parameters** area, the **Segments** spinner specifies the number of segments along the length of the hose. By default, the **Flex Section Enable** check box is selected. As a result, the **Starts**, **Ends**, **Cycles**, and **Diameter** spinners will be enabled. The values in all these spinners are a percentage of the values of the main hose. The value in the **Starts** spinner specifies the point where the flex section starts along the hose. The value in the **Ends** spinner specifies the point where the flex section ends. The **Cycles** spinner is used to define the number of cycles in the flexible section. To display all cycles properly, the number of segments should be more. The **Diameter** spinner is used to specify the secondary diameter of the flexible section.

Smoothing Area

You need to select the **All** radio button in this area to add smoothness to the entire hose. Select the **Sides** radio button to smoothen only the sides of the hose. Select the **None** radio button to create a faceted surface of the hose. Select the **Segments** radio button to apply smoothness on the inner section of the hose.

By default, the **Renderable** and **Generate Mapping Coords** check boxes are selected in this area. The **Renderable** check box is used to view the hose on rendering. The **Generate Mapping Coords** check box is used to automatically assign the mapping coordinates to an object.

Hose Shape Area

The **Hose Shape** area is used to define the basic shape of the hose. Select the **Round Hose** radio button to create a circular cross-section; the **Diameter** and **Sides** spinners will be activated. The **Diameter** spinner specifies the diameter of the hose. The **Sides** spinner specifies the number of sides of the hose.

Select the **Rectangular Hose** radio button to create a rectangular hose; various spinners below this radio button will be activated. The **Width** and **Depth** spinners are used to define the width and depth of the hose, respectively. The **Fillet** spinner specifies the value by which the cross-section corners of the hose get rounded. The value in the **Fillet Segs**

Evaluation Copy. Do not reproduce. For information visit www.cadcim.com

spinner should be higher in order to view the fillet. The value in the **Rotation** spinner rotates the hose around its local Z-axis.

Select the **D-Section Hose** radio button to create a D-shaped hose; various spinners below this radio button will be activated. The **Width** and **Depth** spinners in the **D-Section Hose** radio button are used to define the width and depth of the hose, respectively. The value in the **Round Sides** spinner specifies the total number of segments along the rounded side of the D-shaped hose. The **Fillet** spinner specifies the value by which the square corners of the cross-section get rounded. The value in the **Fillet Segs** spinner should be higher to view the fillet. The value in the **Rotation** spinner rotates the D-shaped hose around its local Z-axis.

TUTORIALS

Tutorial 1

In this tutorial, you will create a 3D model of a couch, as shown in Figure 3-28, by using the extended primitives. **(Expected time: 30 min)**

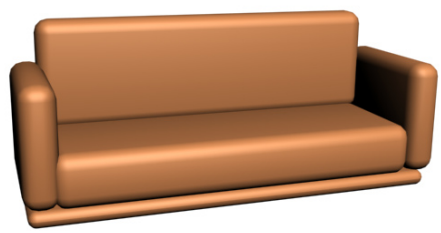

Figure 3-28 *The couch model*

The following steps are required to complete this tutorial:

a. Create the project folder.
b. Create the seat support.
c. Create the back support.
d. Create the left side of the couch.
e. Create the right side of the couch.
f. Create the base of the couch.
g. Save and render the scene.

Creating the Project Folder

Create a new project folder with the name *c03_tut1* at *\Documents\3dsmax2013* and then save the file with the name *c03tut1*, as discussed in Tutorial 1 of Chapter 2.

Evaluation Copy. Do not reproduce. For information visit www.cadcim.com

Creating the Seat Support

In this section, you will use the **ChamferBox** tool to create the seat support of the couch.

1. Activate the Top viewport by middle-clicking in it. Choose **Create > Geometry** in the **Command Panel**. In this panel, by default, the **Standard Primitives** option is displayed in the drop-down list. Select the **Extended Primitives** option from the drop-down list and choose the **ChamferBox** tool from the **Object Type** rollout.

2. Expand the **Keyboard Entry** rollout and set the following parameters in their respective spinners as given below:

   Length: **62.342** Width: **155.575** Height: **22.222** Fillet: **6.0**

3. Choose the **Create** button; a chamfer box is created, as shown in Figure 3-29.

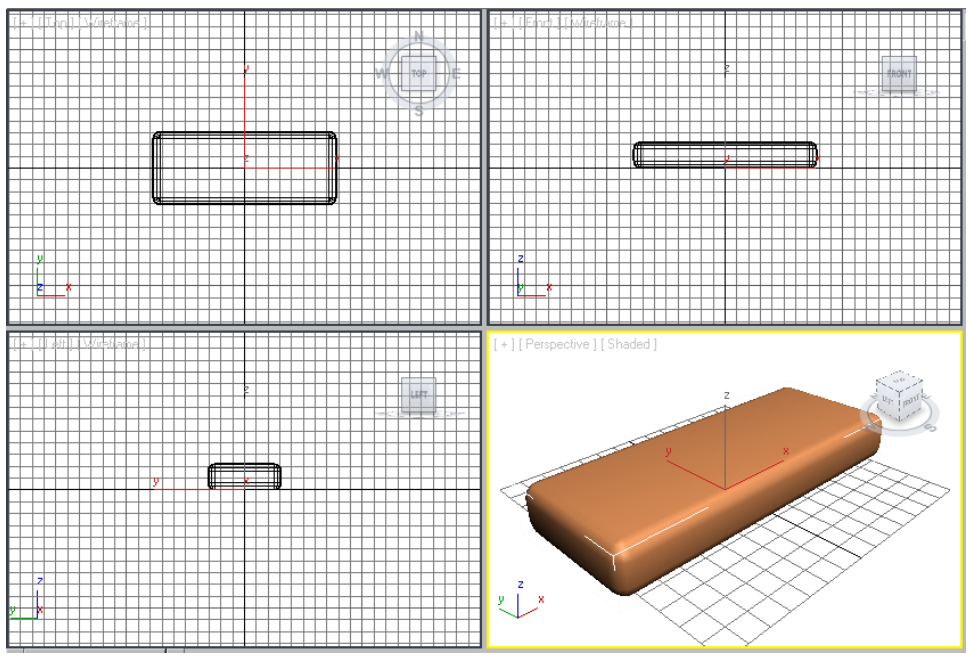

Figure 3-29 *A chamfer box created for the seat support*

4. In the **Parameters** rollout, enter the value **3.0** in the **Fillet Segs** spinner.

5. In the **Name and Color** rollout, enter **seat support** as the name of the chamfer box and press ENTER. Also, use the color swatch to modify the color of the *seat support* by entering the values as given below:

   Red: **225** Green: **143** Blue: **87**

Evaluation Copy. Do not reproduce. For information visit www.cadcim.com

Creating the Back Support

In this section, you will create a chamfer box primitive to create the back support of the couch.

1. Make sure that the Top viewport is activated and the **ChamferBox** tool is chosen.

2. In the **Keyboard Entry** rollout, set the parameters as follows:

   Length: **15.413** Width: **155.575** Height: **48.089** Fillet: **6.0**

3. Choose the **Create** button; another chamfer box is created.

4. In the **Name and Color** rollout, enter **back support** as the name of the new chamfer box and press ENTER.

5. Assign the same color to the *back support* that was assigned to the *seat support*.

6. In the **Parameters** rollout, make sure the value in the **Fillet Segs** spinner is **3.0**.

7. Choose the **Zoom Extents All** tool to display the objects to their extent in all viewports.

   Next, you need to align the *back support* with the *seat support*.

8. Choose the **Select and Move** tool, select the *back support* if it is not selected, and move it in all viewports to align it with the *seat support*, as shown in Figure 3-30.

Creating the Left Side of the Couch

In this section, you will create a chamfer box for the left side of the couch.

1. Activate the Top viewport by middle-clicking in it and choose the **ChamferBox** tool. Now, in the **Keyboard Entry** rollout, set the values in the respective spinners as given next:

   X: **-80.0** Length: **62.323** Width: **14.506**
   Height: **48.895** Fillet: **6.0**

   Use the default values for other parameters.

2. Choose the **Create** button; another chamfer box is created, as shown in Figure 3-31.

3. In the **Parameters** rollout, make sure that the value in the **Fillet Segs** spinner is **3.0**.

4. In the **Name and Color** rollout, enter **left side** and press the ENTER key. Assign the same color to the *left side* that you assigned to the *seat support*.

Evaluation Copy. Do not reproduce. For information visit www.cadcim.com

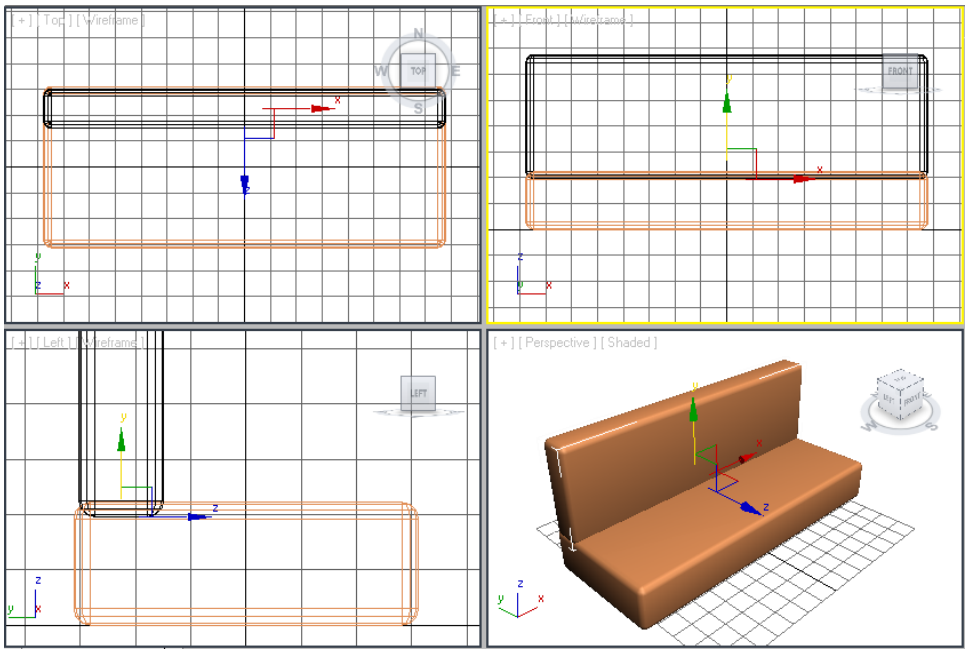

Figure 3-30 *Alignment of the back support with the seat support*

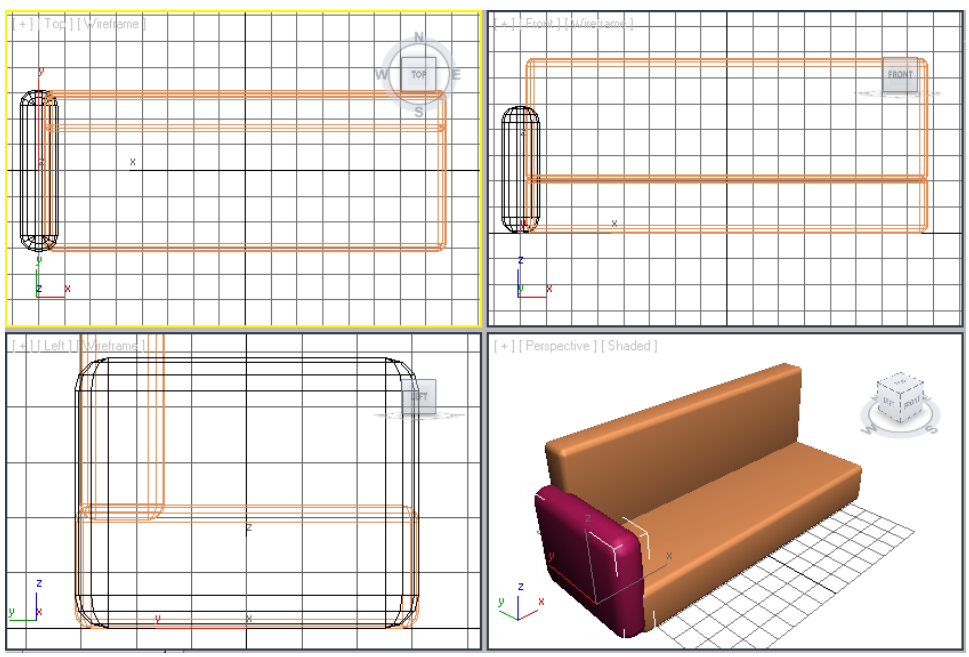

Figure 3-31 *The left side of the couch in all viewports*

Evaluation Copy. Do not reproduce. For information visit www.cadcim.com

Creating the Right Side of the Couch

To create the right side of the couch, you need to copy the *left side* of the couch.

1. Activate the Top viewport by middle-clicking in it. Select the *left side* of the couch using the **Select and Move** tool.

2. Move the cursor over the horizontal axis; it turns yellow. Press and hold the SHIFT key and the left mouse button, and then drag the cursor toward the right side of the couch until the value in the **X** spinner in the coordinate display becomes about **159**. Release the left mouse button and the SHIFT key; the **Clone Options** dialog box is displayed.

3. In the **Clone Options** dialog box, make sure that the **Copy** radio button is selected and the value in the **Number of Copies** spinner is set to **1**. In the **Name** text box, enter **right side** and choose **OK**; the *right side* of the couch is displayed, as shown in Figure 3-32.

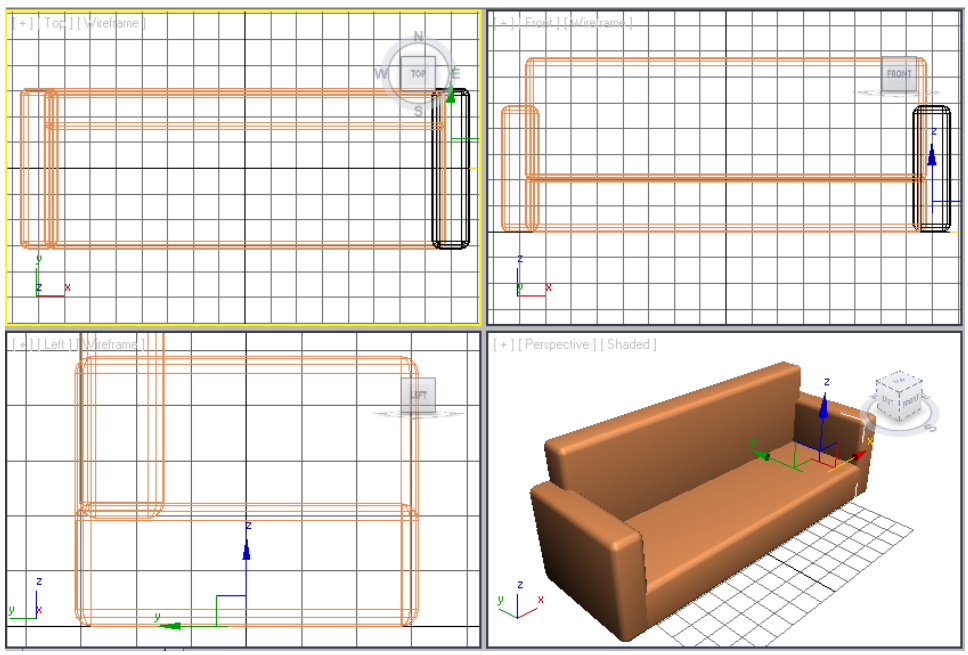

Figure 3-32 *The right side of the couch displayed*

Creating the Base of the Couch

To create the base of the couch, you need to create another chamfer box.

1. Activate the Top viewport by middle-clicking in it and choose the **ChamferBox** tool. In the **Keyboard Entry** rollout, set the following parameters:

   Z: **-5.0** Length: **62.782** Width: **172.0** Height: **5.0**
   Fillet: **6.0**

   Make sure **0** is entered in the **X** and **Y** spinners.

Evaluation Copy. Do not reproduce. For information visit www.cadcim.com

2. Choose the **Create** button; another chamfer box is created, as shown in Figure 3-33.

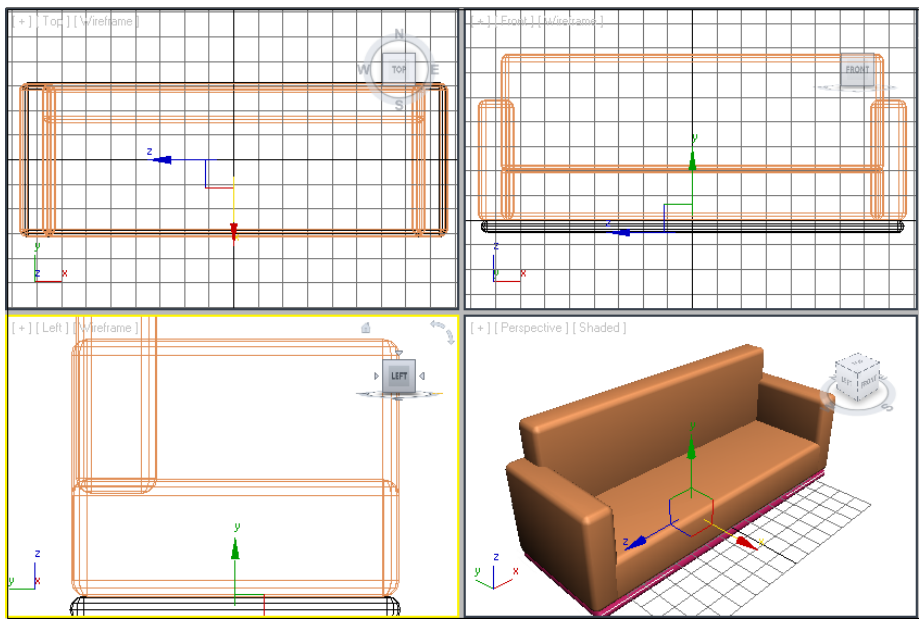

Figure 3-33 *The base of the couch in all viewports*

3. In the **Name and Color** rollout, enter **base** as the name of the chamfer box and press the ENTER key.

4. Assign the same color to the *base* that you assigned to the *seat support*.

Saving and Rendering the Scene

In this section, you will save and then render the scene. You can also view the final rendered image of this scene by downloading the file *c03_3dsmax_2013_rndr.zip* from *http://www.cadcim.com*. The path of the file is as follows:

Textbooks > Animation and Visual Effects > 3ds Max > Autodesk 3ds Max 2013: A Comprehensive Guide

1. Change the background color of the scene to white, follow the steps given in Tutorial 1 of Chapter 2 .

2. Choose **Save** from the **Application** menu.

   As the project folder is already set, by default the path *\Documents\3dsmax2013\c03_tut1\scenes* is displayed in the **Save in** drop-down list of the **Save File As** dialog box.

3. Activate the Perspective viewport by middle-clicking in it. Next, choose the **Render Production** tool from the main toolbar; the **Rendered Frame** window is displayed. This window shows the final output of the scene, refer Figure 3-34.

Evaluation Copy. Do not reproduce. For information visit www.cadcim.com

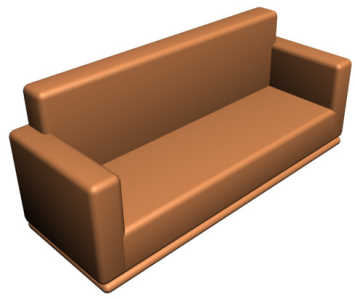

Figure 3-34 *The final output at rendering*

Tutorial 2

In this tutorial, you will create the model of a chair, as shown in Figure 3-35, using the extended primitives and modifiers. **(Expected time: 30 min)**



Figure 3-35 *The chair model*

The following steps are required to complete this tutorial:

a. Create the project folder.
b. Create the seat support.
c. Create the back support.
d. Create the spring support.
e. Create the leg support.
f. Create legs.
g. Create rollers for legs.
h. Create the right hand support.
i. Create the left hand support.
j. Save and render the scene.

Evaluation Copy. Do not reproduce. For information visit www.cadcim.com

Creating the Project Folder

Create a new project folder with the name *c03_tut2* at *\Documents\3dsmax2013* and then save the file with the name *c03tut2*, as discussed in Tutorial 1 of Chapter 2.

Creating the Seat Support

In this section, you need to create a chamfer box primitive to create the seat support of the chair.

1. Activate the Top viewport by middle-clicking in it. Choose **Create > Geometry** in the **Command Panel**; the **Standard Primitives** option is displayed by default in the drop-down list. Select the **Extended Primitives** option from the list and then choose the **ChamferBox** tool from the **Object Type** rollout.

2. Expand the **Keyboard Entry** rollout and set the values as follows:

   Length: **90.0** Width: **100.0** Height: **17.0**
   Fillet: **10.0**

3. Choose the **Create** button; a chamfer box is created.

4. Make sure that the chamfer box is selected. In the **Parameters** rollout, set the value **10** in the **Fillet Segs** spinner; the chamfer box is modified, as shown in Figure 3-36.

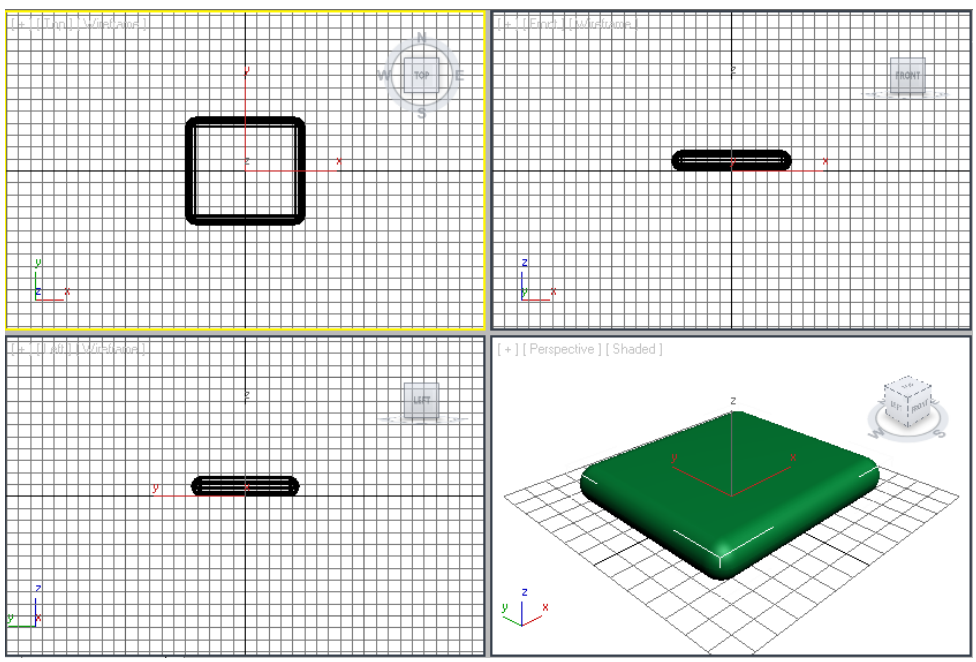

Figure 3-36 *The chamfer box created for the seat support of the chair*

Evaluation Copy. Do not reproduce. For information visit www.cadcim.com

5. In the **Name and Color** rollout, enter **seat support** as the name of the chamfer box and press ENTER.

6. Use the color swatch to modify the color of the *seat support* by entering the values as follows:

   Red: **88** Green: **199** Blue: **225**

Creating the Back Support

In this section, you will use the **ChamferBox** tool from the extended primitives to create the back support of the chair.

1. Activate the Front viewport by middle-clicking in it and make sure that the **ChamferBox** tool is chosen.

2. Expand the **Keyboard Entry** rollout and set the values as follows:

   X: **0.0** Y: **65.0** Z: **-65.0** Length: **90.0**
   Width: **100.0** Height: **19.633** Fillet: **10.0**

3. Choose the **Create** button; a chamfer box is created.

4. Make sure that the chamfer box is selected. In the **Parameters** rollout, set the value **10** in the **Fillet Segs** spinner; the chamfer box is modified, as shown in Figure 3-37.

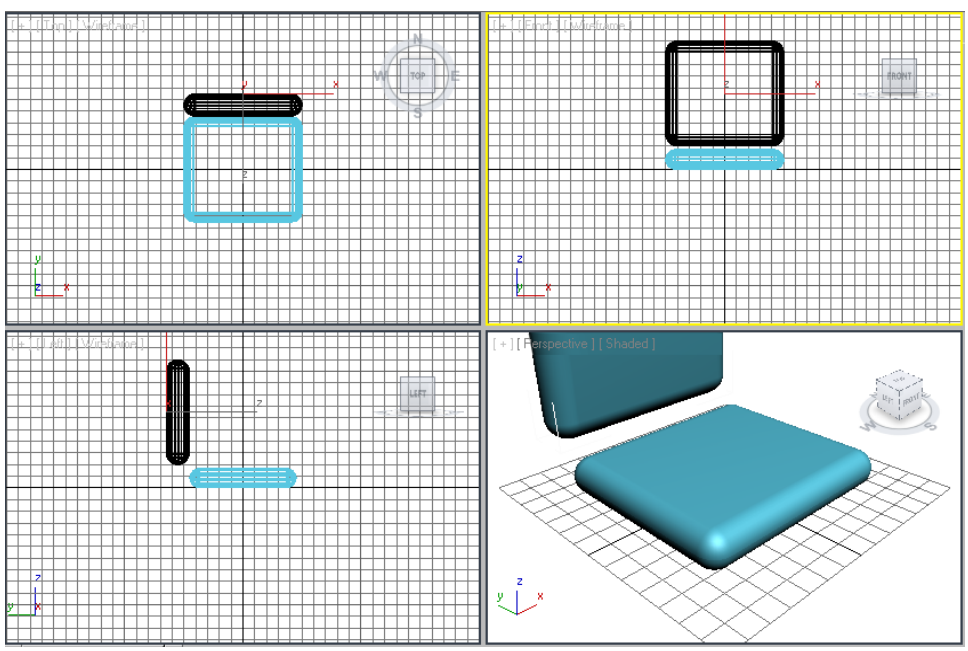

Figure 3-37 *The back support for the chair in all viewports*

Evaluation Copy. Do not reproduce. For information visit www.cadcim.com

5. In the **Name and Color** rollout, enter **back support** as the name of the chamfer box and press ENTER.

6. Choose the color swatch and assign the same color to the *back support* that you assigned to the *seat support*.

7. Choose the **Zoom Extents All** tool to display the objects properly in all viewports.

   Next, you need to create the spring support to join the *seat* and the *back support*.

Creating the Spring Support

In this section, you will create the spring support by using the **Hose** tool from the extended primitives.

1. Activate the Top viewport by clicking on it. Choose **Create > Geometry** in the **Command Panel**. Make sure that the **Extended Primitives** option is selected in the drop-down list, Then, choose the **Hose** tool from the **Object Type** rollout.

2. In the Top viewport, press and hold the left mouse button, drag the cursor to specify the radius of the hose, and then release the left mouse button. Next, move the cursor up to specify the height of the hose and click on the viewport; a hose is created.

3. In the **Name and Color** rollout, enter **spring support** as the name of the hose and press ENTER. Then, modify the color of the *spring support* to black.

4. In the **Hose Parameters** rollout, set the values of the *spring support* as follows:

   End Point Method Area
   Make sure that the **Free Hose** radio button is selected.
   Free Hose Parameters Area
   Height: **25.815**

   Common Hose Parameters Area
   Cycles: **9**
   Use the default values for the other options in this area.

   Smoothing Area
   Make sure the **All** radio button is selected.

   Hose Shape Area
   Make sure the **Round Hose** radio button is selected.
   Diameter: **15.0** Sides: **8**

   After setting the values in the **Hose Parameters** rollout, align the *spring support* in all viewports, as shown in Figure 3-38.

Evaluation Copy. Do not reproduce. For information visit www.cadcim.com

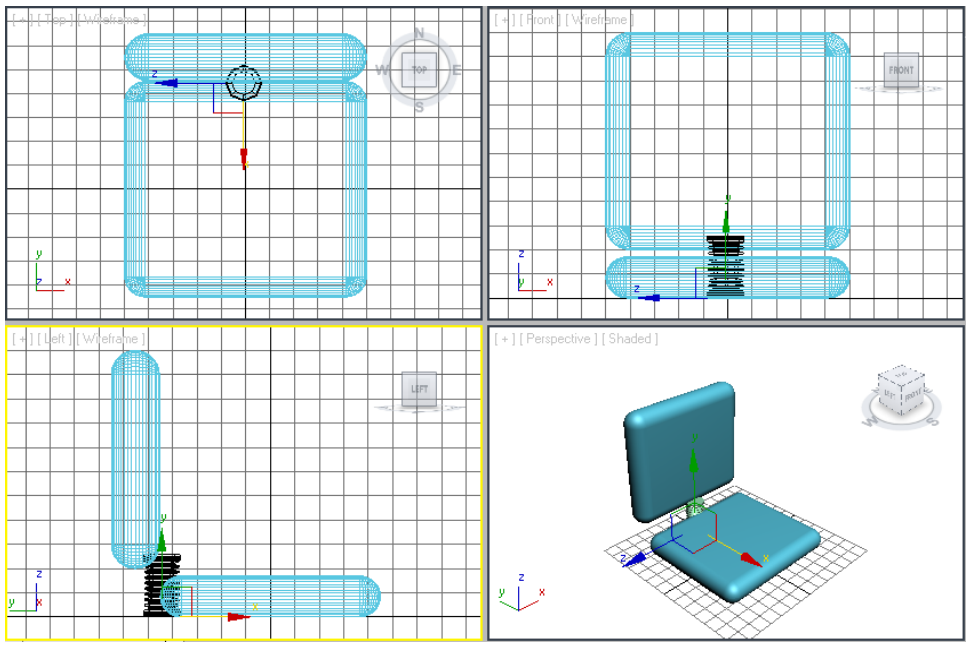

Figure 3-38 *The spring support in all viewports*

Next, you need to apply the **Bend** modifier to the *spring support* to join the *seat* and the *back support*.

Applying the Bend Modifier

In this section, you will apply the bend modifier to the *spring support*.

1. Make sure that the *spring support* is selected and then choose **Modifiers > Parametric Deformers > Bend** from the menu bar; the **Bend** modifier is displayed in the modifier stack. Also, the **Parameters** rollout is displayed in the **Modify** tab.

2. In the **Parameters** rollout of the **Bend** modifier, set the values as follows:

   Bend Area
   Angle: **90.0** Direction: **90**

   Bend Axis area
   Make sure the **Z** radio button is selected.

3. After entering the values, the *spring support* is displayed, as shown in Figure 3-39.

   Next, you need to align the *spring support*.

Evaluation Copy. Do not reproduce. For information visit www.cadcim.com

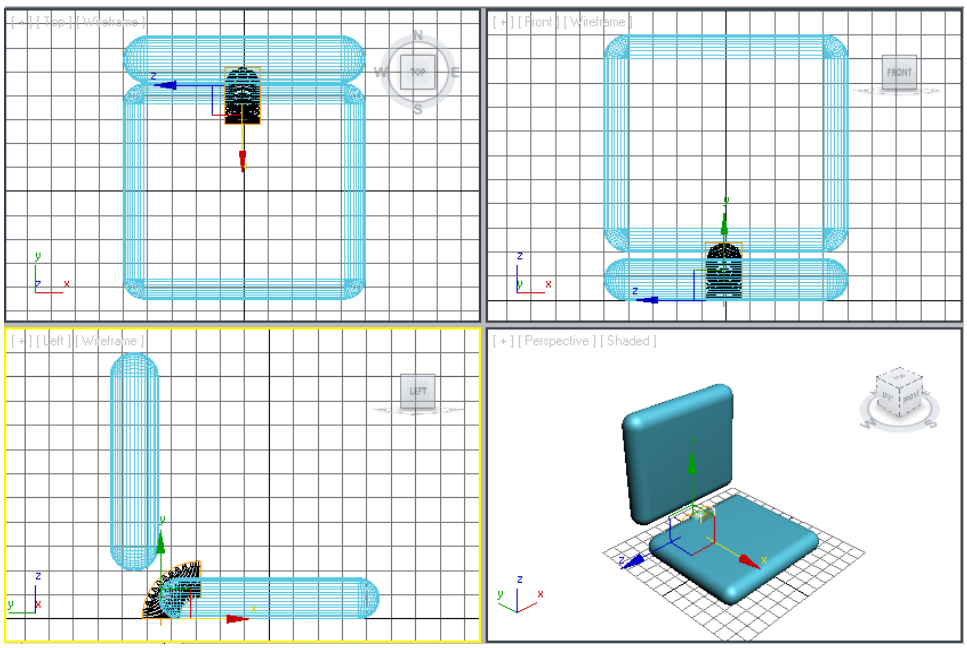

Figure 3-39 *The spring support after applying the* ***Bend*** *modifier*

Aligning the Spring Support

In this section, you will align the spring support.

1. Activate the Left viewport by middle-clicking in it and make sure that the *spring support* is selected. Choose the **Zoom Extents Selected** tool; the *spring support* is zoomed in the Left viewport, as shown in Figure 3-40.

2. Right-click on the **Select and Rotate** tool; the **Rotate Transform Type-In** dialog box is displayed. In the **Offset: Screen** area, set **90** in the **Z** spinner; the *spring support* is rotated, as shown in Figure 3-41. Now, close the **Rotate Transform Type-In** dialog box.

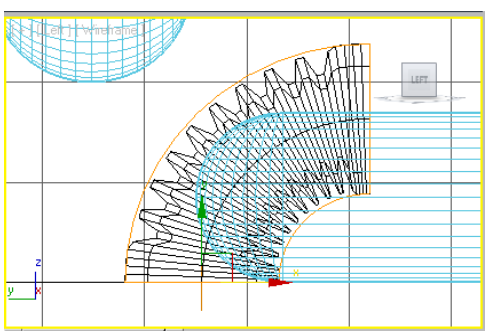

Figure 3-40 *The spring support zoomed in the Left viewport*

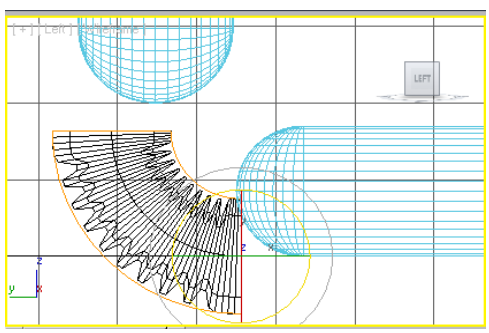

Figure 3-41 *The spring support rotated in the Left viewport*

Evaluation Copy. Do not reproduce. For information visit www.cadcim.com

3. Choose the **Select and Move** tool and align the *spring support*, as shown in Figure 3-42.

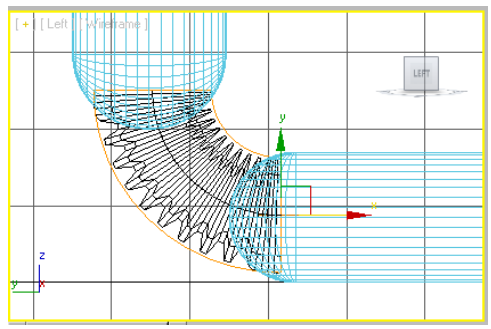

Figure 3-42 *Alignment of the spring support in the Left viewport*

4. Align the *spring support* in all viewports, refer to Figure 3-43. Choose the **Zoom Extents All** tool to display all objects properly in all viewports.

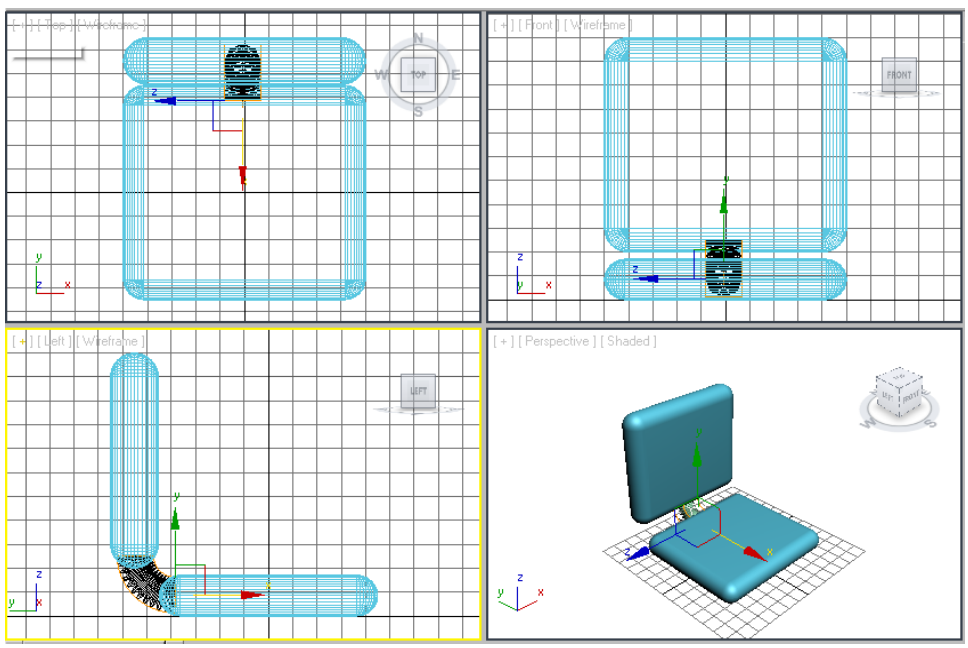

Figure 3-43 *Alignment of the spring support in all viewports*

Creating the Leg Support

Now, you need to create the leg support. You will use the **Hose** tool from the extended primitives to create it.

1. Activate the Top viewport by middle-clicking in it and then create a hose object as discussed earlier.

Evaluation Copy. Do not reproduce. For information visit www.cadcim.com

2. In the **Name and Color** rollout, enter **leg support** as the name of the hose and press ENTER. Also, modify the color of the *leg support* to black.

3. In the **Hose Parameters** rollout, set the values of the *leg support* as follows:

End Point Method Area
Make sure that the **Free Hose** radio button is selected.

Free Hose Parameters Area
Height: **42.0**

Common Hose Parameters Area
Make sure that the **Flex Section Enable** check box is selected.

Starts: **22.0** Ends: **82.0**
Cycles: **10** Diameter: **-20.0**

Smoothing Area
Select the **All** radio button.

Hose Shape Area
Select the **Round Hose** radio button.

Diameter: **17.0** Sides: **8**

4. Choose the **Select and Move** tool and align the *leg support* in all viewports, as shown in Figure 3-44.

Creating the Legs

In this section, you need to use the **ChamferBox** tool from **Extended Primitives** to create the legs of the chair.

1. Activate the Top viewport and choose the **ChamferBox** tool.

2. Expand the **Keyboard Entry** rollout and set the values as follows:

X: **-29** Y: **0.0** Z: **-42.0** Length: **5.748**
Width: **44.0** Height: **7.0** Fillet: **2.0**

3. Choose the **Create** button; a chamfer box is created.

4. Make sure that the chamfer box is selected. In the **Parameters** rollout, set the values as follows:

Length Segs: **10** Width Segs: **10** Height Segs: **10**
Fillet Segs: **10**

Evaluation Copy. Do not reproduce. For information visit www.cadcim.com

After entering the values, the chamfer box is modified.

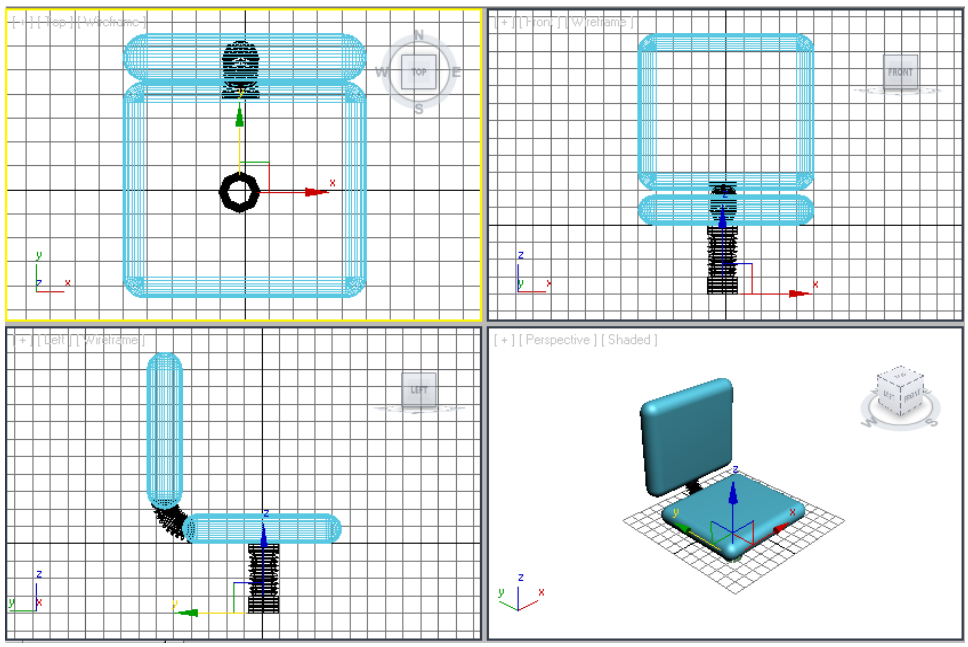

Figure 3-44 *Alignment of the leg support in all viewports*

5. In the **Name and Color** rollout, enter **leg01** as the name of the chamfer box and press ENTER. Also, modify its color to black.

6. Choose the **Select and Move** tool and align the *leg01* with the *leg support* in all viewports, as shown in Figure 3-45.

   Next, you need to apply the **Taper** modifier to the *leg01* to taper it.

Applying the Taper Modifier

In this section, you will taper the legs of the model by using taper modifier.

1. Make sure that the *leg01* is selected, and then choose the **Zoom Extents All Selected** tool; the *leg01* is zoomed in all viewports, as shown in Figure 3-46.

2. Choose **Modifiers > Parametric Deformers > Taper** from the menu bar; the **Taper** modifier is displayed in the modifier stack. Also, the **Parameters** rollout is displayed in the **Modify** tab.

3. In the **Parameters** rollout of the **Taper** modifier, set the values as given below:

   Taper Area
   Amount: **0.53**

Evaluation Copy. Do not reproduce. For information visit www.cadcim.com

Taper Axis Area

Select the **X** radio button in the **Primary** group and the **ZY** radio button in the **Effect** group.

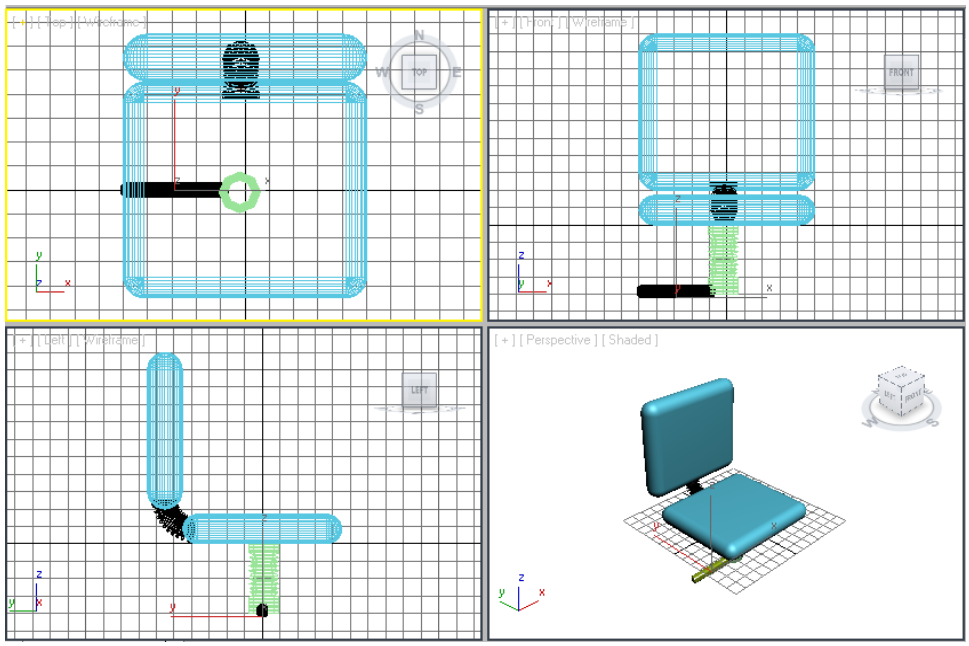

Figure 3-45 *Alignment of the leg01 in all viewports*

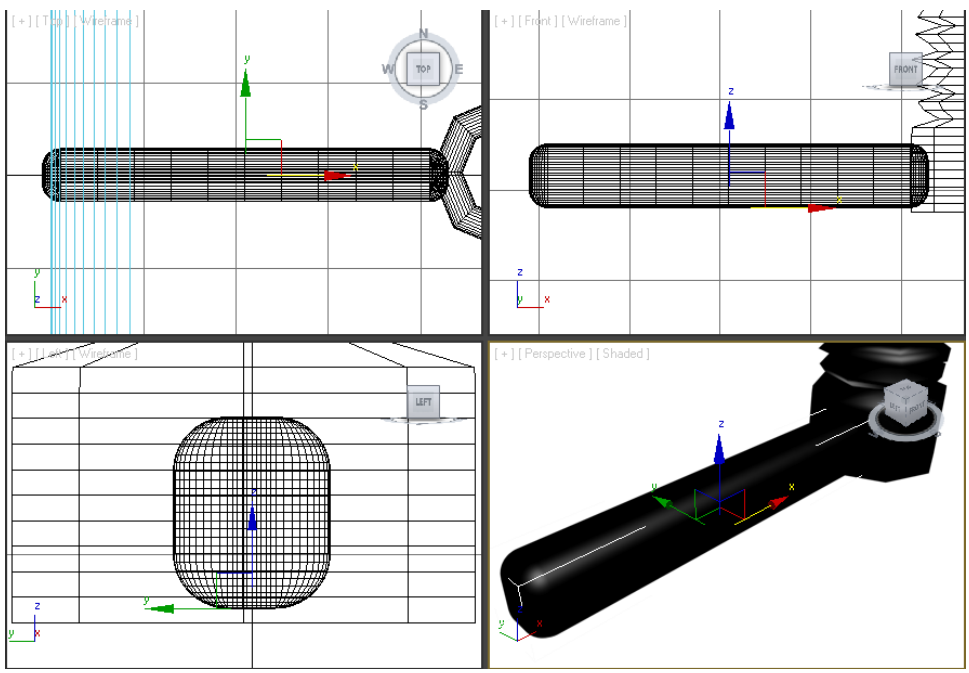

Figure 3-46 *The leg01 after invoking the* ***Zoom Extents All Selected*** *tool*

Evaluation Copy. Do not reproduce. For information visit www.cadcim.com

4. After entering the values, *leg01* is tapered, as shown in Figure 3-47.

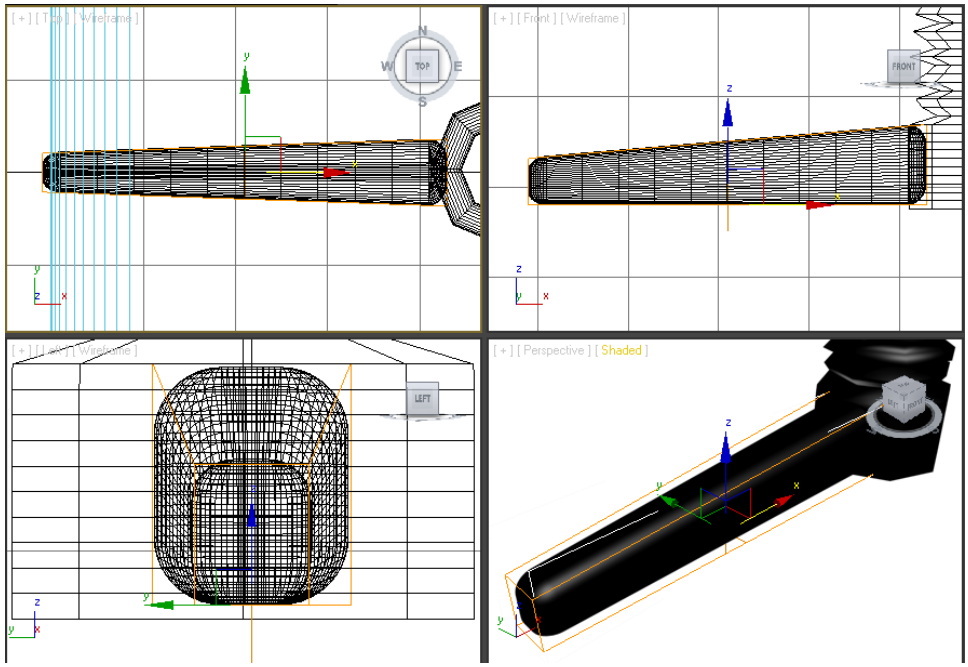

Figure 3-47 *The leg01 displayed in all viewports after applying the* ***Taper*** *modifier*

Next, you need to create rollers.

Creating Rollers for Legs

In this section, you will create rollers. You will use the chamfer box and chamfer cylinder primitives to create them.

1. Activate the Top viewport and choose the **ChamferBox** tool.

2. Expand the **Keyboard Entry** rollout and set the values as follows:

   X: **-40** Y: **0.0** Z: **-20.0** Length: **7.032**
   Width: **14.816** Height: **1.799** Fillet: **1.0**

3. Choose the **Create** button; a chamfer box is created.

4. Make sure that the chamfer box is selected. In the **Parameters** rollout, set the values as follows:

   Length Segs: **10** Width Segs: **10** Height Segs: **10**
   Fillet Segs: **10**

5. In the **Name and Color** rollout, enter **box01** as the name of the chamfer box and press ENTER. Also, modify its color to black.

Evaluation Copy. Do not reproduce. For information visit www.cadcim.com



Note

*To view the box01 in all viewports, you need to adjust the view by invoking the **Zoom** and **Pan View** tools.*

Next, you need to apply the **Bend** modifier to the *box01*.

6. Choose **Modifiers > Parametric Deformers > Bend** from the menu bar; the **Bend** modifier is displayed in the modifier stack. Also, the **Parameters** rollout is displayed in the Modify panel.

7. In the **Parameters** rollout of the **Bend** modifier, set the values as follows:

Bend Area
Angle: **173.5**

Bend Axis Area
Select the **X** radio button.

8. After applying the **Bend** modifier, the *box01* is displayed, as shown in Figure 3-48.

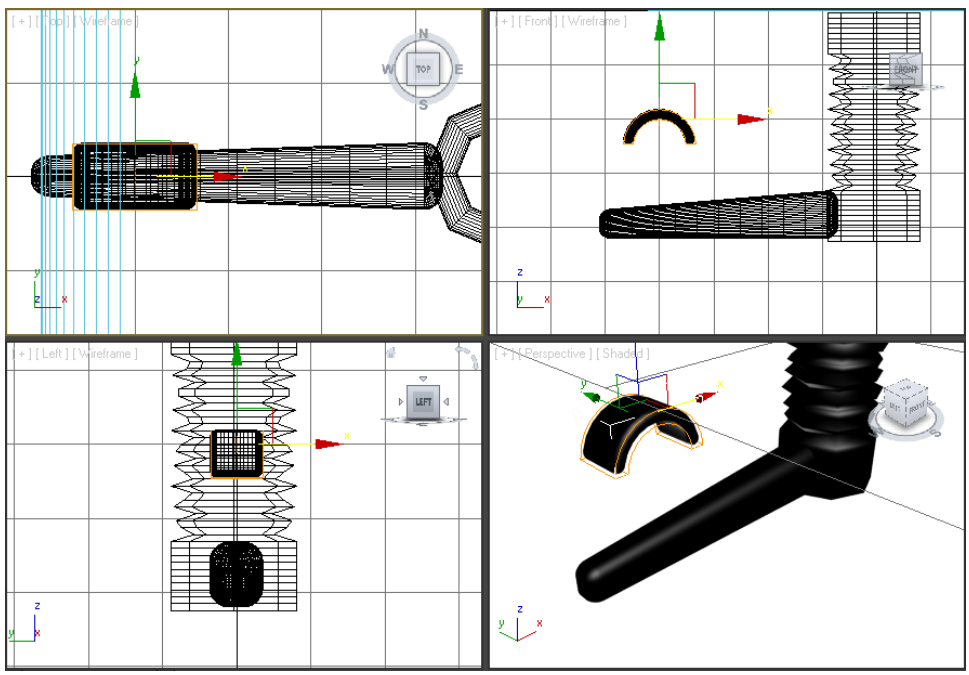

Figure 3-48 *The box01 displayed in all viewports after applying the **Bend** modifier*

Next, you need to create a chamfer cylinder.

9. Make sure that the **Extended Primitives** option is selected in the drop-down list of the **Command Panel**. Now, choose the **ChamferCyl** tool in the **Object Type** rollout.

Evaluation Copy. Do not reproduce. For information visit www.cadcim.com

10. Activate the Top viewport and expand the **Keyboard Entry** rollout. Set the values as follows:

    X: **-40** Y: **0.0** Z: **-20.0**
    Radius: **5.0** Height: **7.0** Fillet: **1.0**

11. Choose the **Create** button; a chamfer cylinder is created.

12. Make sure that the chamfer cylinder is selected. In the **Parameters** rollout, set the values as follows:

    Height Segs: **10** Fillet Segs: **10** Sides: **12**
    Cap Segs: **11**

    Make sure that the **Smooth** check box is selected.

13. In the **Name and Color** rollout, enter **cylinder01** as the name of the chamfer box and press ENTER. Also, modify its color by specifying the values as follows:

    Red: **151** Green: **151** Blue: **151**

14. Align the *cylinder01* with the *box01* in all viewports using the **Select and Rotate** and **Select and Move** tools, refer to Figure 3-49.

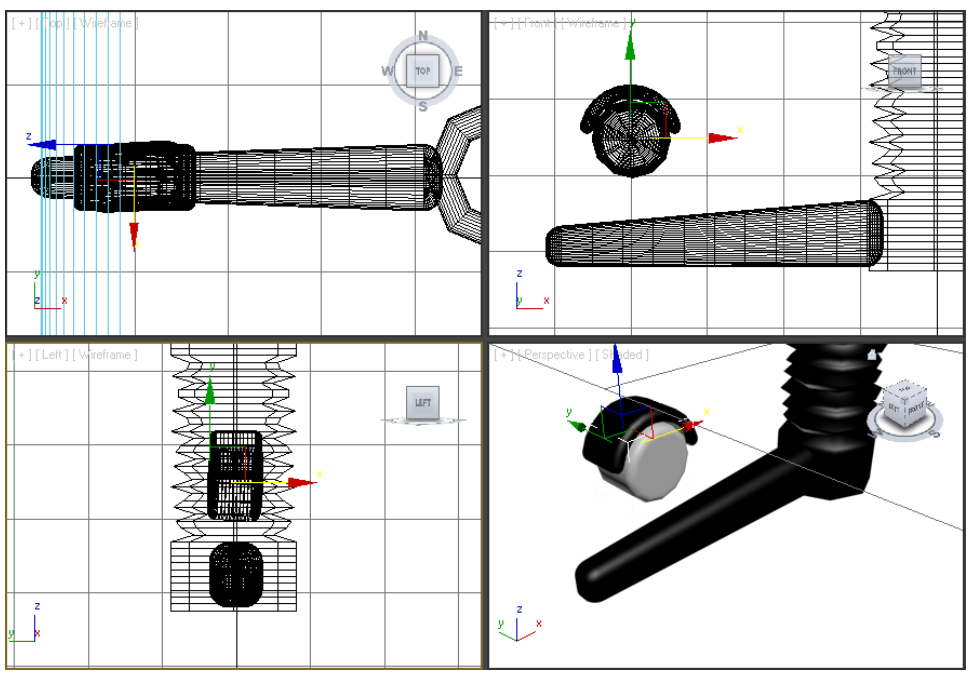

Figure 3-49 *Alignment of the cylinder01 with the box01 in all viewports*

Evaluation Copy. Do not reproduce. For information visit www.cadcim.com

Next, you need to group *cylinder01* and *box01*.

15. Choose the **Select Object** tool from the **Main Toolbar** and select the *cylinder01* and *box01* by dragging a selection box around them.

16. Choose **Group > Group** from the menu bar; the **Group** dialog box is displayed.

17. Enter **roller01** in the **Group name** text box and choose the **OK** button; the group is named as *roller01*.

18. Using the **Select and Move** and **Select and Rotate** tools, align the *roller01* with the *leg01*, in all viewports, as shown in Figure 3-50.

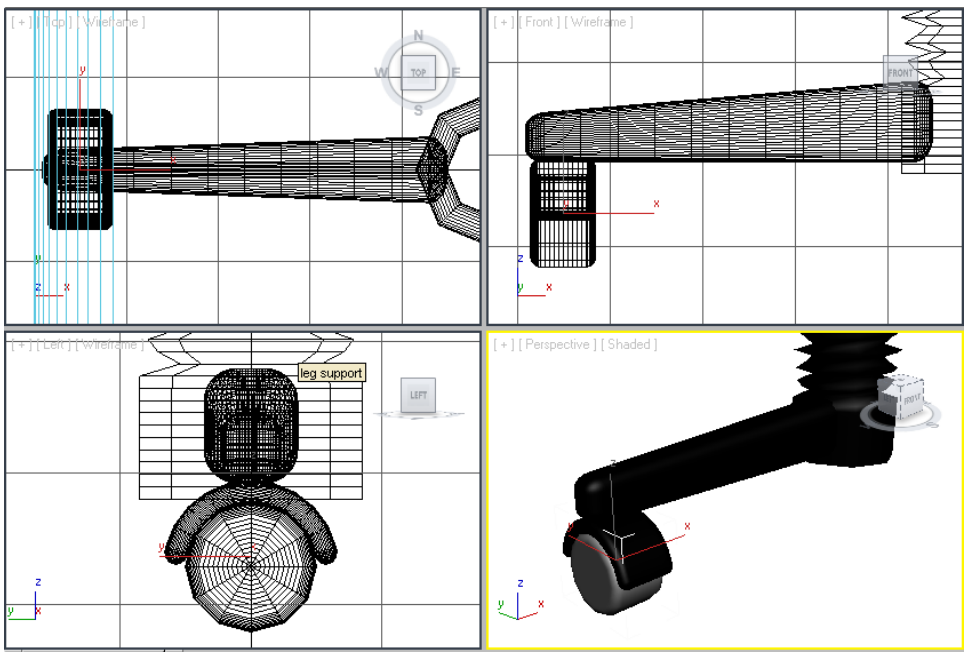

Figure 3-50 *Alignment of the roller01 with the leg01 in all viewports*

19. Next, group the *leg01* and the *roller01* as *f_leg01*.

20. Choose the **Zoom Extents All** tool to view all objects in all viewports.

Next, you need to create other legs for the chair using the same dimensions. To do so, you need to copy *f_leg01*.

21. Activate the Top viewport and select the *f_leg01*. Now, choose the **Hierarchy** tab in the **Command Panel**; the **Pivot** tab is chosen by default in the hierarchy panel.



22. In the **Pivot** tab, choose the **Use Working Pivot** button in the **Working Pivot** rollout; the cursor is displayed at the center of the scene. Also, the **USE WP** text is displayed below the viewport label in all viewports. The working pivot point enables you to rotate the *f_leg01*

Evaluation Copy. Do not reproduce. For information visit www.cadcim.com

about an arbitrary and persistent point in the scene without affecting the original pivot point of the object.

23. Activate the Top viewport and then choose the **Select and Rotate** tool; a circular gizmo is displayed, as shown in Figure 3-51.

24. Move the cursor over the Z-axis that is blue in color; it is highlighted in yellow color. Now, press and hold the SHIFT key as well as the left mouse button, and drag the cursor until the value in the **Z** spinner in the coordinate display becomes about **-72**, as shown in Figure 3-52. Release the left mouse button; the **Clone Options** dialog box is displayed. Make sure that the **Copy** radio button is selected. Set **4** in the **Number of Copies** spinner. Choose the **OK** button; the *f_leg002*, *f_leg003*, *f_leg004*, and *f_leg005* are displayed in all viewports, as shown in Figure 3-53.

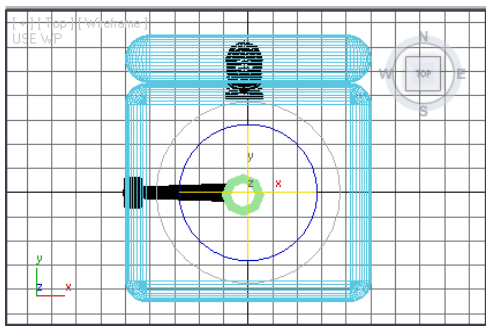

Figure 3-51 *A circular gizmo displayed at the location of the working pivot point*

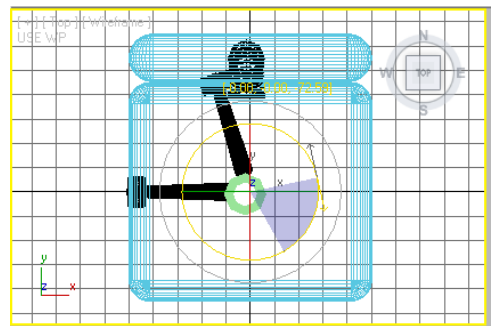

Figure 3-52 *The f_leg01 rotated about* ***-72*** *degrees with respect to the working pivot point*

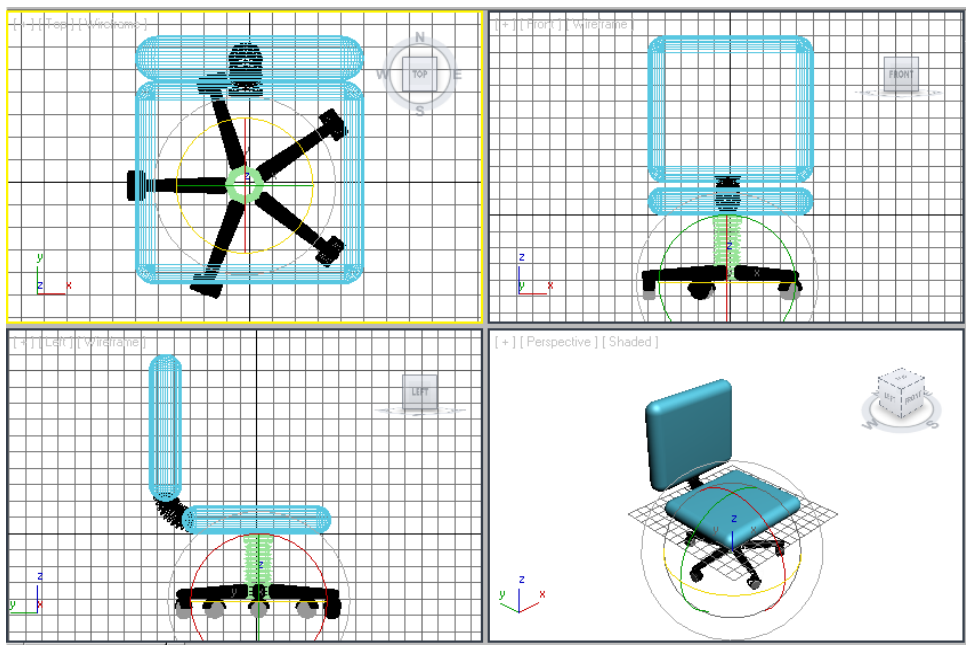

Figure 3-53 *The f_leg002, f_leg003, f_leg004, and f_leg005 in all viewports*

Evaluation Copy. Do not reproduce. For information visit www.cadcim.com

25. Deactivate the **Use Working Pivot** button by choosing it again in the **Working Pivot** rollout; the cursor is moved to its original position. Also, the USE WP text disappears from the viewport label in all viewports.

Creating the Right Hand Support

In this section, you will use the **Box** tool from **Standard Primitives** to create the right hand support of the chair.

1. Activate the Top viewport and choose **Create > Geometry** in the **Command Panel**. Now, select the **Standard Primitives** option from the drop-down list. Choose the **Box** tool in the **Object Type** rollout.

2. Expand the **Keyboard Entry** rollout and set the values as follows:

   Length: **5.515** Width: **9.0** Height: **55.0**

3. Choose the **Create** button; a box is created.

4. In the **Parameters** rollout, set the values as given below:

   Length Segs: **15** Width Segs: **15** Height Segs: **15**



Note

The more the number of segments in an object, the smoother will be its surface when you apply a modifier to it.

5. In the **Name and Color** rollout, enter **right hand support01** as the name of the box and press ENTER. Also, change its color to black.

   Next, you need to apply the **Bend** modifier to the *right hand support01* to give it the shape of a hand rest.

6. Make sure that the *right hand support01* is selected and then apply the **Bend** modifier to it as discussed earlier.

7. In the **Parameters** rollout of the **Bend** modifier, set the parameters as follows:

   Bend Area
   Angle: **107.5** Direction: **270.0**

   Bend Axis Area
   Select the **Z** radio button.

8. Align the *right hand support01* in all viewports, as shown in Figure 3-54.

   Next, you need to create the second part of the *right hand support01*. To do so, you need to copy the *right hand support01*.

Evaluation Copy. Do not reproduce. For information visit www.cadcim.com

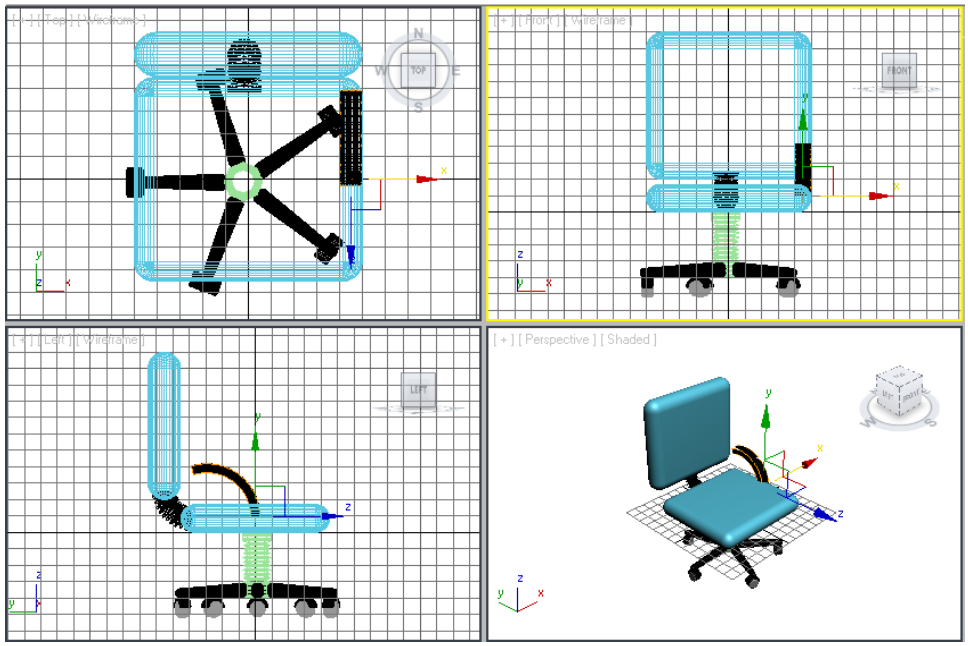

Figure 3-54 *Alignment of the right hand support01 in all viewports*

9. Activate the Top viewport, select the *right hand support01*, and then create its copy; it is automatically named as the *right hand support002*.

10. In the **Parameters** rollout of the **Bend** modifier, set the values as follows:

    Bend Area
    Angle: **90** Direction: **180**

    Bend Axis Area
    Select the **Z** radio button.

    Limits Area
    Select the **Limit Effect** check box.
    Upper Limit: **18.0**

11. After entering the values, the *right hand support002* is modified, as shown in Figure 3-55.

12. Align the *right hand support002* in all viewports using the **Select and Move** and **Select and Rotate** tools, as shown in Figure 3-56.

Note

*You can use the **Orbit** tool in the Perspective viewport to view the proper alignment of the right hand support002 in all viewports.*

13. Select the *right hand support01* and *right hand support002* and group them as the *right hand support*.

Evaluation Copy. Do not reproduce. For information visit www.cadcim.com

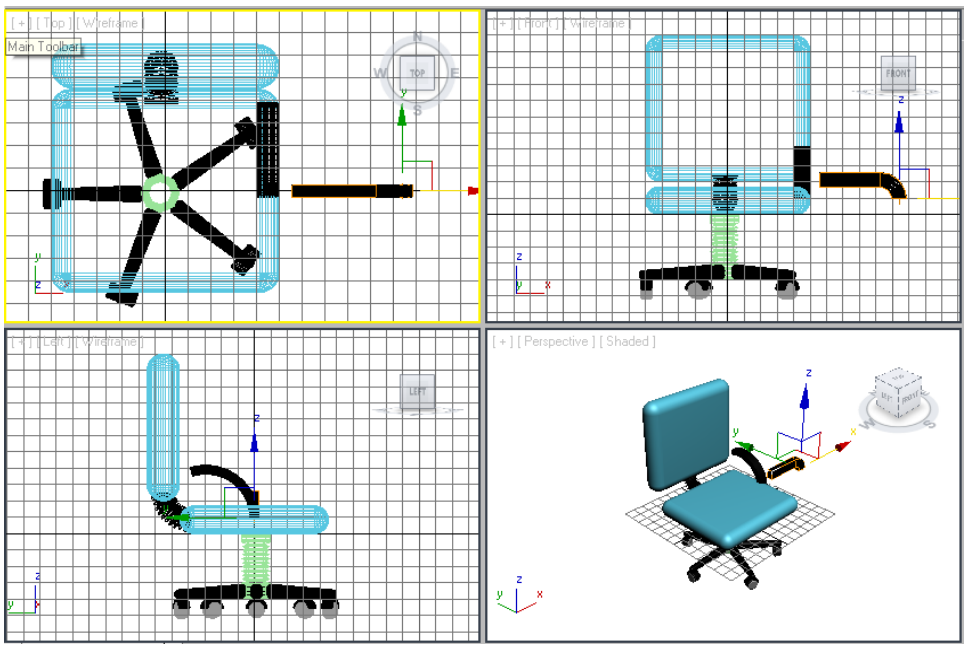

Figure 3-55 *The right hand support002 after modifying the values of the* ***Bend*** *modifier*

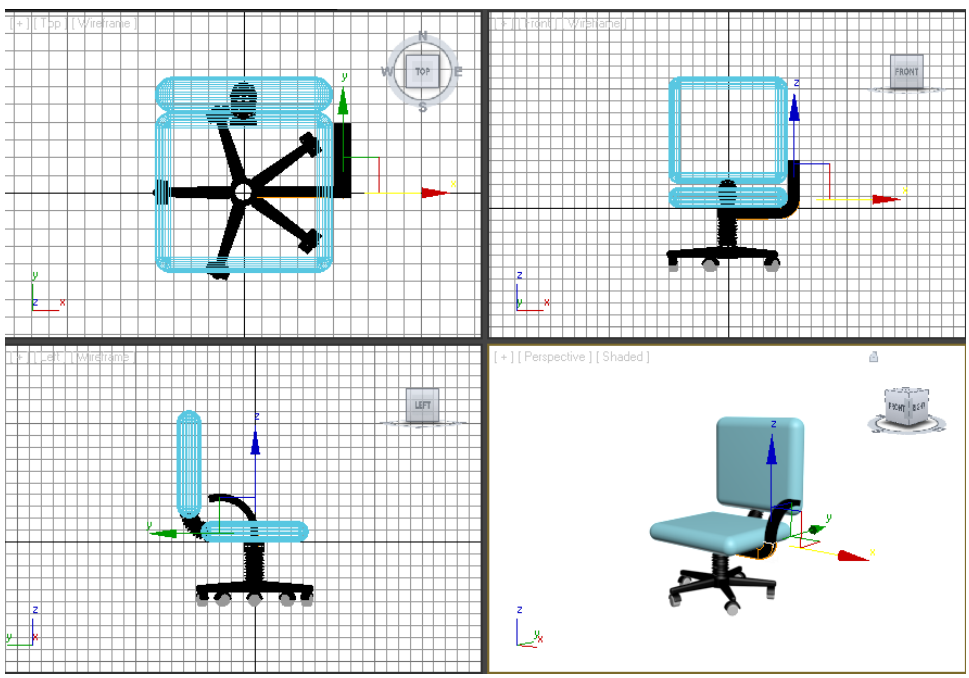

Figure 3-56 *Alignment of the right hand support002 in all viewports*

Evaluation Copy. Do not reproduce. For information visit www.cadcim.com

14. Choose the **Zoom Extents All** tool to view all objects in all viewports.

Creating the Left Hand Support

In this section, you will create a copy of the *right hand support*.

1. Activate the Top viewport, select the *right hand support*, and create its copy. Modify the name of the newly created copy to *left hand support*.

2. Choose the **Mirror** tool from the **Main Toolbar**; the **Mirror: Screen Coordinates** dialog box is displayed, as shown in Figure 3-57.

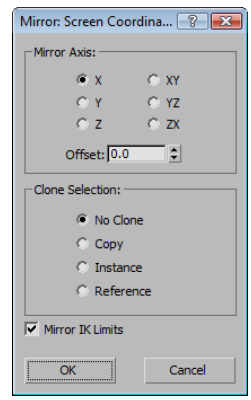

***Figure 3-57** The **Mirror: Screen Coordinates** dialog box*

3. In this dialog box, make sure that the **X** radio button is selected in the **Mirror Axis** area and the **Copy** radio button is selected in the **Clone Selection** area. Then, choose the **OK** button.

4. Align the *left hand support* in all viewports, as shown in Figure 3-58.

Saving and Rendering the Scene

In this section, you will save and then render the scene. You can also view the final rendered image of this scene by downloading the file *c03_3dsmax_2013_rndr.zip* from *http://www.cadcim.com*. The path of the file is as follows:

Textbooks > Animation and Visual Effects > 3ds Max > Autodesk 3ds Max 2013: A Comprehensive Guide

1. Change the background color of the scene to white by following the steps given in Tutorial 1 of Chapter 2 .

2. Choose **Save** from the **Application** menu.

   As the project folder is already set, the path *\Documents\3dsmax2013\c03_tut2\scenes* is displayed in the **Save in** drop-down list of the **Save File As** dialog box.

3. Activate the Perspective viewport by middle-clicking in it. Next, choose the **Render Production** tool from the **Main Toolbar**; the **Rendered Frame** window is displayed. This window shows the final output of the scene, refer to Figure 3-59.

Evaluation Copy. Do not reproduce. For information visit www.cadcim.com

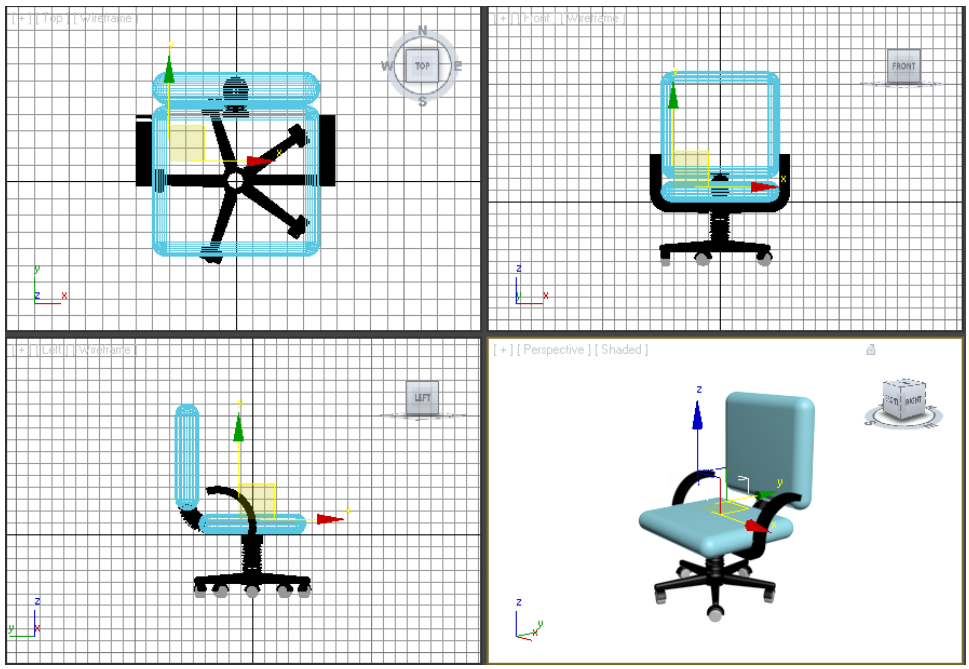

Figure 3-58 *Alignment of the left hand support in all viewports*



Figure 3-59 *The final rendered output*

Self-Evaluation Test

Answer the following questions and then compare them to those given at the end of this chapter:

1. Which of the following tools is available in the **Snaps Toggle** flyout?

(a) **Angle Snap Toggle** (b) **Percent Snap Toggle**
(c) **Spinner Snap Toggle** (d) **2.5 Snap**

Evaluation Copy. Do not reproduce. For information visit www.cadcim.com

2. Which of the following modifiers is used to bend an object along its axis?

   (a) **Bend** (b) **Taper**
   (c) **Percent Snap Toggle** (d) None of these

3. Which of the following tools in the extended primitives does not have the **Creation Method** and **Keyboard Entry** rollouts?

   (a) **RingWave** (b) **Hedra**
   (c) **Hose** (d) All of these

4. The value in the _____ spinner in the **Bend** area of the **Bend** modifier is used to define the angle of bend along the X, Y, or Z axis.

Review Questions

Answer the following questions:

1. In the **Parameters** rollout of the **Taper** modifier, the **Primary** area is used to define the _____ axis and the **Effect** area is used to define the _____ from the primary axis.

2. In the **Limits** area of the **Parameters** rollout of the **Bend** modifier, the default value in the **Upper Limit** and **Lower Limit** spinner is _____.

3. In the **Parameters** rollout of the chamfer cylinder, the **Slice On** check box is used to specify the start and end angle of the chamfer cylinder. (T/F)

4. The **Taper** modifier is used to bend an object in angular increments. (T/F)

5. In the **Family Parameters** area of the **Parameters** rollout of the hedra, the combined value of the **P** and **Q** spinners can be either equal to or less than 1.0. (T/F)

EXERCISES

Exercise 1

Create the model of a stool shown in Figure 3-60 using your own dimensions. You can view the final rendered image of this model by downloading the file *c03_3dsmax_2013_exr.zip* from *http://www.cadcim.com*. The path of the file is as follows:

Textbooks > Animation and Visual Effects > 3ds Max > Autodesk 3ds Max 2013: A Comprehensive Guide **(Expected time: 30 min)**

Evaluation Copy. Do not reproduce. For information visit www.cadcim.com



Figure 3-60 *The model of a stool*

Exercise 2

Create the models shown in Figures 3-61 and 3-62 by using your own dimensions. You can view the final rendered scene by downloading the file *c03_3dsmax_2013_exr.zip* from *http://www.cadcim.com*. The path of the file is mentioned in Exercise 1. **(Expected time: 30 min)**



Figure 3-61 *The model of a table*



Figure 3-62 *The model of a chair*

Answers to Self-Evaluation Test

1. d, **2.** a, **3.** d, **4. Angle**

Evaluation Copy. Do not reproduce. For information visit www.cadcim.com