Chapter 1

Introduction to SolidWorks 2011

Learning Objectives

After completing this chapter, you will be able to:

- *Understand how to start SolidWorks.*
- *Learn about the system requirements to run SolidWorks.*
- *Learn about various modes of SolidWorks.*
- *Learn about various CommandManagers of SolidWorks.*
- *Understand important terms used in SolidWorks.*
- *Save files in SolidWorks automatically.*
- *Change the color scheme in SolidWorks.*



Evaluation Copy. Do not reproduce. For information visit www.cadcim.com

INTRODUCTION TO SolidWorks 2011

Welcome to the world of Computer Aided Designing (CAD) with SolidWorks. If you are a new user of this software, you will join hands with thousands of users of this parametric, feature-based, and one of the most user-friendly software packages. If you are familiar with the previous releases of this software, you will be able to upgrade your designing skills with this tremendously improved release of SolidWorks.

SolidWorks, developed by SolidWorks Corporation, USA, is a feature-based, parametric solid modeling mechanical design and automation software. SolidWorks is the first CAD package to use the Microsoft Windows graphic user interface. The use of the drag and drop (DD) functionality of Windows makes this CAD package extremely easy to learn. The Windows graphic user interface makes it possible for the mechanical design engineers to innovate their ideas and implement them in the form of virtual prototypes or solid models, large assemblies, subassemblies, and detailing and drafting.

SolidWorks is one of the products of SolidWorks Corporation, which is a part of Dassault Systemes. SolidWorks also works as platform software for a number of software packages. This implies that you can also use other compatible software packages within the SolidWorks window, which can be used as add-ins to SolidWorks. Some of the software packages that can be used on SolidWorks work platform are listed below:

SolidWorks Workgroup PDM	SolidWorks Simulation	eDrawings
SolidWorks Motion	SolidWorks Flow Simulation	FeatureWorks
SolidWorks Toolbox	SolidWorks Routing	PhotoView 360
SolidWorks Utilities	3D Instant Website	ScanTo3D
TolAnalyst	Design Checker	CircuitWorks

As mentioned earlier, SolidWorks is a parametric, feature-based, and easy-to-use mechanical design automation software. It enables you to convert the basic 2D sketch into a solid model by using simple but highly effective modeling tools. SolidWorks does not restrict you to 3D solid output, but it extends to bidirectional associative generative drafting. With SolidWorks, you can create complex parametric shapes in the form of surfaces. It also enables you to create weldment structures. The feature-based, parametric, and bi-directional properties of this solid modeling software are explained next.

Feature-based Modeling

A feature is defined as the smallest building block that can be modified individually. In SolidWorks, the solid models are created by integrating a number of such building blocks. A model created in SolidWorks is a combination of a number of individual features that are interrelated, directly or indirectly. These features understand their fits and functions properly and therefore can be modified at any time during the design process. If proper design intent is maintained while creating the model, these features automatically adjust their values to any change in their surrounding. This provides greater flexibility to the design.

Evaluation Copy. Do not reproduce. For information visit www.cadcim.com

Parametric Modeling

The parametric nature of a software package is defined as its ability to use standard properties or parameters in defining the shape and size of a geometry. The main function of this property is to drive the selected geometry to a new size or shape without considering its original dimensions. You can change or modify the shape and size of any feature at any stage of the design process. This property makes the designing process very easy.

For example, consider the design of the body of the pipe housing shown in Figure 1-1. In order to change this design by modifying the diameter of the holes and the number of holes on the front, top, and bottom faces, you need to select the feature and change the diameter and the number of instances in the pattern. The modified design is shown in Figure 1-2.

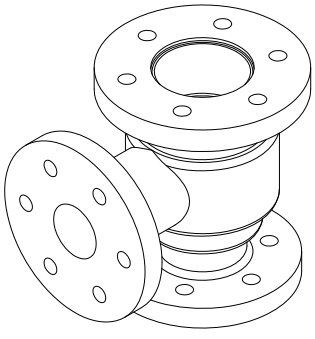

Figure 1-1 *Body of pipe housing*

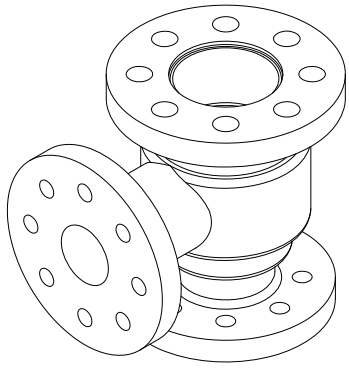

Figure 1-2 *Design after modifications*

Bidirectional Associativity

SolidWorks has different modes such as **Part**, **Assembly**, and **Drawing**. There exists bidirectional associativity among all these modes. This associativity ensures that any modification made in a model in any one of these modes of SolidWorks is automatically reflected in the other modes immediately. For example, if you modify the dimension of a part in the **Part** mode, the change will be reflected in the **Assembly** and **Drawing** modes as well. Similarly, if you modify the dimensions of a part in the drawing views generated in the **Drawing** mode, the changes will be reflected in the **Part** and **Assembly** modes. Consider the drawing views shown in Figure 1-3. These are the drawing views of the body of the pipe housing shown in Figure 1-1. Now, when you modify the model of the body of the pipe housing in the **Part** mode, the changes will be reflected in the **Drawing** mode automatically. Figure 1-4 shows the drawing views of the pipe housing after increasing the diameter and the number of holes.

Evaluation Copy. Do not reproduce. For information visit www.cadcim.com

Evaluation Copy. Do not reproduce. For information visit www.cadcim.com

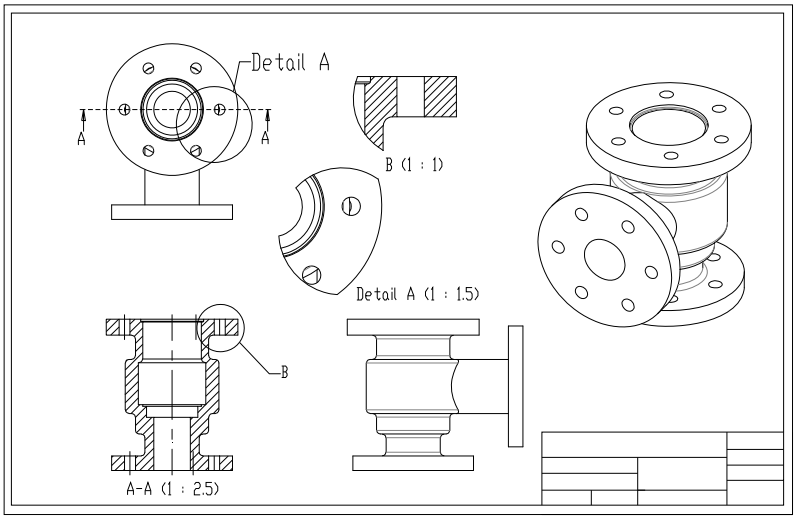

Figure 1-3 *Drawing views of the body part*

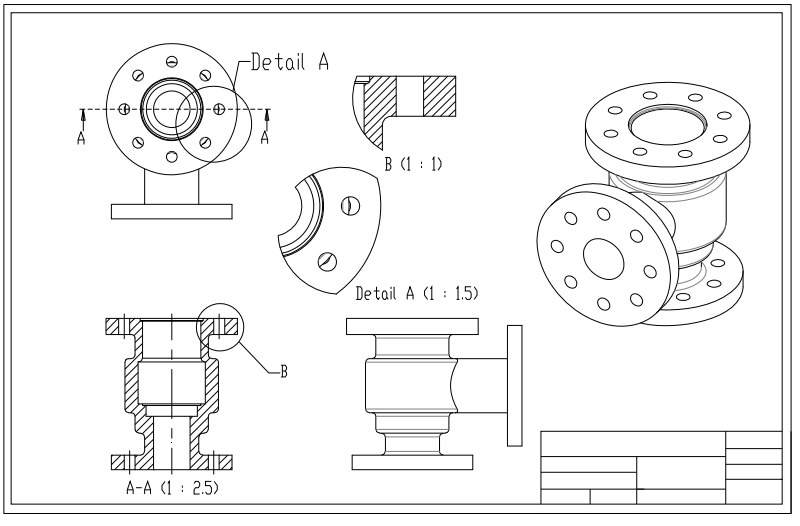

Figure 1-4 *Drawing views after modifications*

MODES OF SolidWorks

Some of the important modes of SolidWorks are discussed next.

Part Mode

The **Part** mode of SolidWorks is a feature-based parametric environment in which you can create solid models. You are provided with three default planes named as **Front Plane**, **Top Plane**, and **Right Plane**. First, you need to select a sketching plane to create the sketch for

the base feature. On selecting a sketching plane, the sketching environment is invoked. The sketches for a model are drawn in the sketching environment using easy-to-use tools. After drawing the sketches, you can dimension them and apply the required relations in the same sketching environment. The design intent is captured easily by adding relations and equations and using the design table in the design. You are provided with the standard hole library known as the **Hole Wizard** in the **Part** mode. You can create simple holes, tapped holes, counterbore holes, countersink holes, and so on by using this wizard. These holes can be of any standard type such as ISO, Ansi, JIS, and so on. You can also create complicated surfaces by using the surface modeling tools available in the **Part** mode. Annotations such as weld symbols, geometric tolerance, datum references, and surface finish symbols can be added to a model within the **Part** mode. The standard features that are used frequently can be saved as library features and retrieved when needed. The palette feature library is also provided in SolidWorks, which contains a number of standard mechanical parts and features. You can also work with weld modeling within the **Part** mode of SolidWorks by creating steel structures and adding weld beads. All standard weld types and welding conditions are available for your reference.

Assembly Mode

In the **Assembly** mode, you can assemble the components of an assembly with the help of the required tools. There are two methods to assemble the components:

1. Bottom-up assembly
2. Top-down assembly

In the bottom-up assembly method, an assembly is created by assembling the components created earlier and maintaining their design intent. In the top-down method, the components are created in the assembly mode. You may begin with some ready-made parts and then create other components in the context of the assembly. You can refer to the features of some components of the assembly to drive the dimensions of other components. You can assemble all components of an assembly by using a single tool, the **Mate** tool. While assembling the components of an assembly, you can also animate the assembly by dragging it. In addition, you can also check the working of your assembly. Collision detection is one of the major features of this mode. Using this feature, you can rotate and move components as well as detect the interference and collision between the assembled components. You can see the realistic motion of the assembly by using physical dynamics. Physical simulation is used to simulate the assembly with the effects of motors, springs, and gravity on the assemblies.

Drawing Mode

The **Drawing** mode is used to document the parts or assemblies created earlier in the form of drawing views and their details. There are two types of drafting done in SolidWorks:

1. Generative drafting
2. Interactive drafting

Generative drafting is a process of generating the drawing views of a part or an assembly created earlier. The parametric dimensions and annotations added to a component in the **Part** mode can be generated in the drawing views. Generative drafting is bidirectionally associative

Evaluation Copy. Do not reproduce. For information visit www.cadcim.com

Evaluation Copy. Do not reproduce. For information visit www.cadcim.com

in nature. Automatic BOMs and balloons can be added to an assembly while generating its drawing views.

In interactive drafting, you need to create drawing views by sketching them using the normal sketching tools and then add dimensions to them.

SYSTEM REQUIREMENTS

The system requirements for ensuring the smooth functioning of SolidWorks on your system are as follows:

- Microsoft Windows XP Professional, Windows Vista, or Windows 7.
- Intel or AMD Processors.
- 1 GB RAM minimum (6 GB recommended).
- A certified graphics card and driver.
- Microsoft Office Excel - 2002, 2003, or 2007 version.
- Adobe Acrobat higher than 7.0.7
- DVD drive, and Mouse or any other compatible pointing device.
- Internet Explorer version 6.x or higher.

GETTING STARTED WITH SolidWorks

Install SolidWorks on your system and choose the **Start** button at the lower left corner of the screen. Next, choose **Programs** to display the **Program** menu. From this menu, choose **SolidWorks 2011** to display the cascading menu and then choose **SolidWorks 2011** from it, as shown in Figure 1-5.

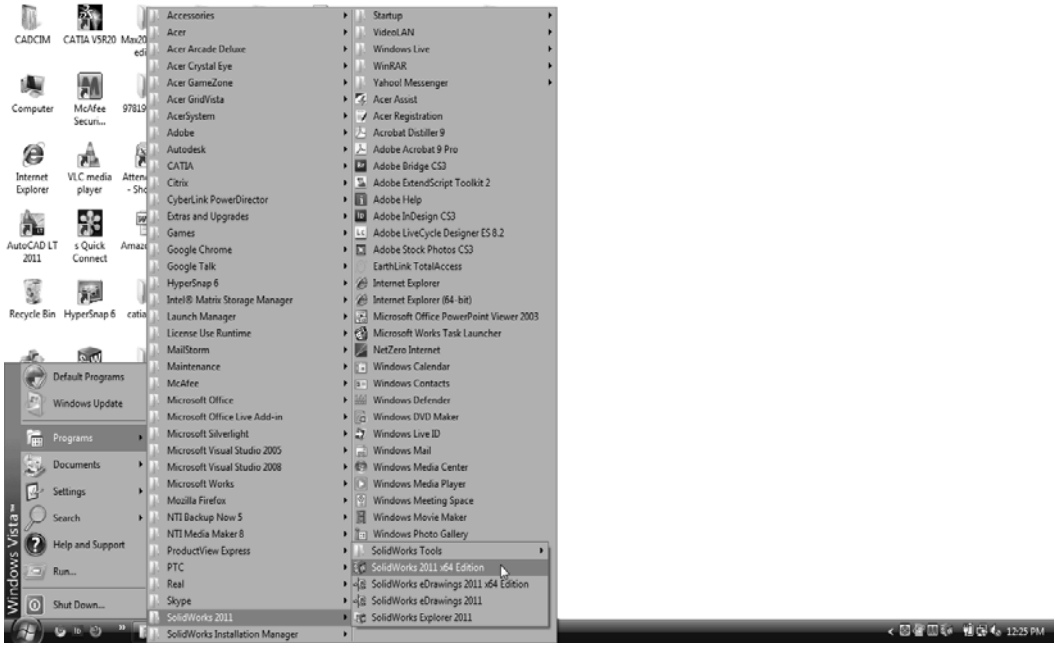

Figure 1-5 *Starting SolidWorks using the taskbar shortcut menu*

On doing so, the system will prepare to start SolidWorks, and after sometime, the SolidWorks window will be displayed on the screen. If you are opening SolidWorks for the first time, the **SolidWorks License Agreement** dialog box will be displayed, as shown in Figure 1-6. Choose the **Accept** button in this dialog box; the SolidWorks window will open and the **SolidWorks Resources** task pane will be displayed on the right, as shown in Figure 1-7. This window can be used to open a new file or an existing file.

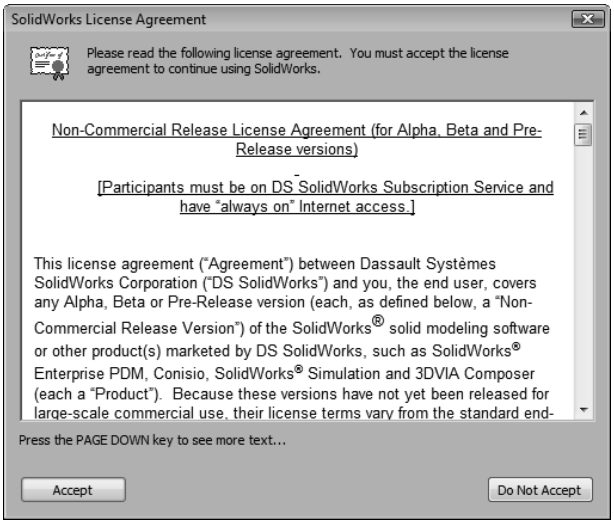

Figure 1-6 *The* ***SolidWorks License Agreement*** *dialog box*

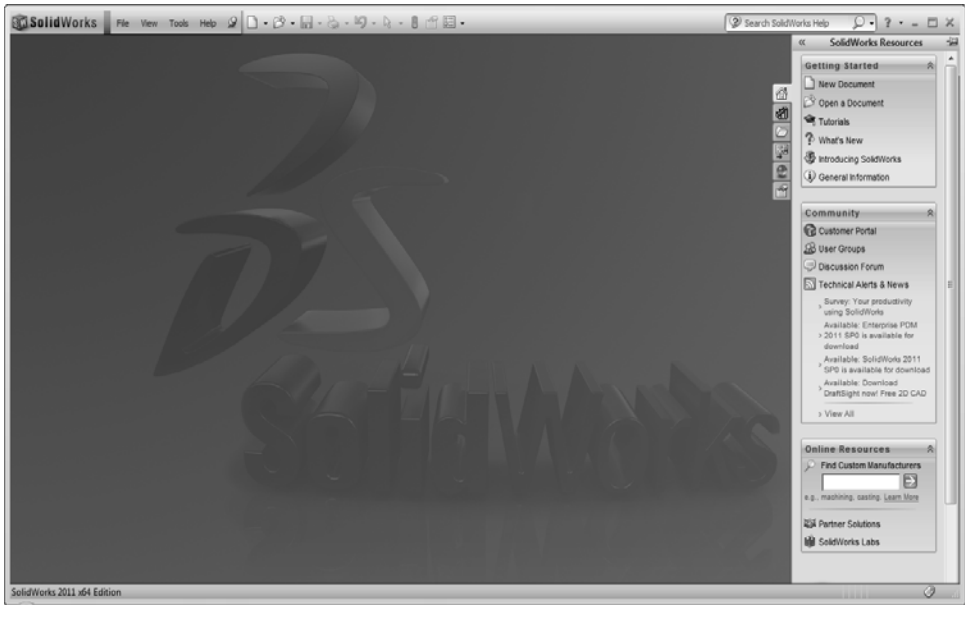

Figure 1-7 *The SolidWorks window and the SolidWorks Resources task pane*

Evaluation Copy. Do not reproduce. For information visit www.cadcim.com



Tip. *You can also start **SolidWorks 2011** by double-clicking on the **SolidWorks 2011 SP0.0** shortcut icon displayed on the desktop of your computer. You need to create the shortcut icon of **SolidWorks 2011**, if it is not created by default. To create the shortcut icon, choose the **Start** button available at the lower left corner of the screen. Next, choose **Programs** to display the **Program** menu and then choose **SolidWorks 2011** to display the cascading menu. Move the cursor on **SolidWorks 2011** and right-click to display the shortcut menu. Move the cursor to the **Send To** option; a cascading menu will be displayed. Choose the **Desktop (create shortcut)** option from the cascading menu; the **SolidWorks 2011** shortcut icon will be placed on the desktop of your computer.*

If the **SolidWorks Resources** task pane is not displayed by default, choose the **SolidWorks Resources** button on the right of the window to display it. This task pane is used to open online tutorials and to visit the website of SolidWorks partners. Choose the **New Document** button from the **Getting Started** group in the **SolidWorks Resources** task pane to open a new file. Alternatively, you can choose the **New** button from the Menu Bar. On doing so, the **New SolidWorks Document** dialog box will be displayed, as shown in Figure 1-8.

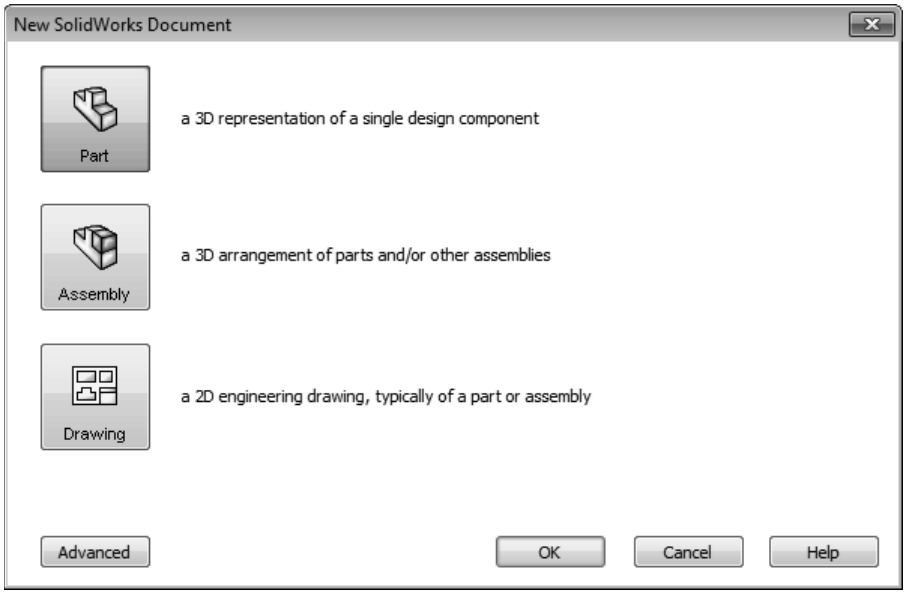

Figure 1-8 *The **New SolidWorks Document** dialog box*

In this dialog box, choose the **Part** button to create a part model and then choose **OK** to enter the **Part** mode of SolidWorks. Move the cursor to the SolidWorks logo at the top of the screen; the SolidWorks menus will be displayed. Note that the task pane closes automatically once you start a new file and click in the drawing area. The initial screen display on starting a new part file of SolidWorks using the **New** button in the Menu Bar is shown in Figure 1-9.



Tip. *In SolidWorks, the tip of the day is displayed at the bottom of the task pane. You can choose **Next Tip** to view additional tips. These tips help you use SolidWorks efficiently. It is recommended that you view at least 2 or 3 tips every time you start a new session of SolidWorks 2011.*

Evaluation Copy. Do not reproduce. For information visit www.cadcim.com

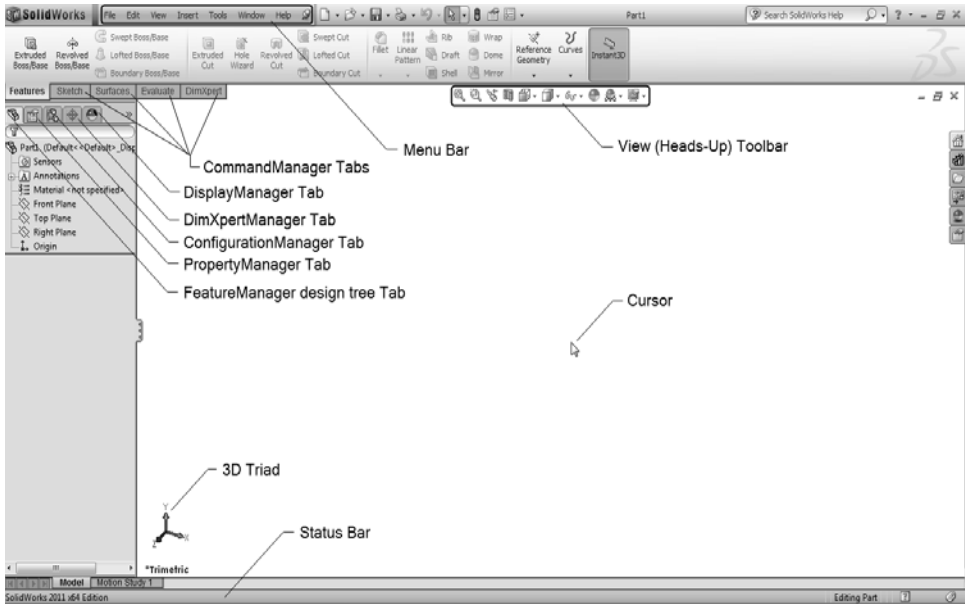

Figure 1-9 *The components of a new part document*

It is evident from the screen that SolidWorks is a very user-friendly solid modeling software. Apart from the default CommandManager shown in Figure 1-9, you can also invoke other CommandManagers. To do so, move the cursor on a CommandManager tab and right-click; a shortcut menu will be displayed. Choose the required CommandManager from the shortcut menu; the CommandManager will be added. Besides the existing CommandManager, you can also create a new CommandManager.

MENU BAR AND SolidWorks MENUS

In SolidWorks, the display area of the screen has been increased by grouping the tools that have similar functions or purposes. The tools that are in the **Standard** toolbar are also available in the Menu Bar, as shown in Figure 1-10. This toolbar is available above the drawing area. When you move the cursor on the SolidWorks logo at the top left corner of the display area, the SolidWorks menus will be displayed as a cascading menu, as shown in Figure 1-11. You can also fix them by choosing the push-pin button.



Figure 1-10 *The Menu Bar*



Figure 1-11 *The SolidWorks menus*

Evaluation Copy. Do not reproduce. For information visit www.cadcim.com

Evaluation Copy. Do not reproduce. For information visit www.cadcim.com

CommandManager

You can invoke a tool in SolidWorks from four locations: CommandManager, SolidWorks menus on top of the screen, toolbar, and shortcut menu. The CommandManagers are docked above the drawing area. While working with a CommandManager, you will realize that invoking a tool from the CommandManager is the most convenient method to invoke a tool. Different types of CommandManager are used for different design environments. These CommandManagers are discussed next.

Part Mode CommandManagers

You can invoke a number of CommandManagers from the **Part** mode. The CommandManagers that are extensively used during the designing process in this environment are described next.

Sketch CommandManager

This CommandManager is used to enter and exit the 2D and 3D sketching environments. The tools available in this CommandManager are used to draw sketches for features. This CommandManager is also used to add relations and smart dimensions to the sketched entities. The **Sketch CommandManager** is shown in Figure 1-12.

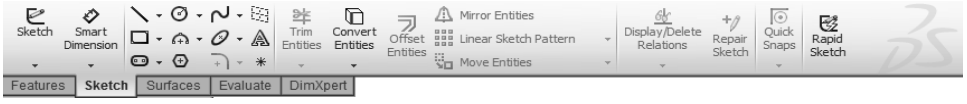

*Figure 1-12 The **Sketch CommandManager***

Features CommandManager

This is one of the most important CommandManagers provided in the **Part** mode. Once a sketch has been drawn, you need to convert the sketch into a feature by using the modeling tools. This CommandManager provides all the modeling tools used for feature-based solid modeling. The **Features CommandManager** is shown in Figure 1-13.



*Figure 1-13 The **Features CommandManager***

DimXpert CommandManager

This CommandManager is used to add dimensions and tolerances to the features of a part. The **DimXpert CommandManager** is shown in Figure 1-14.

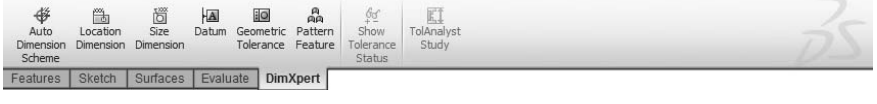

*Figure 1-14 The **DimXpert CommandManager***

Evaluate CommandManager

This CommandManager is used to measure the distance between two entities, add equations in the design, calculate the mass properties of a solid model, and so on. The **Evaluate CommandManager** is shown in Figure 1-15.

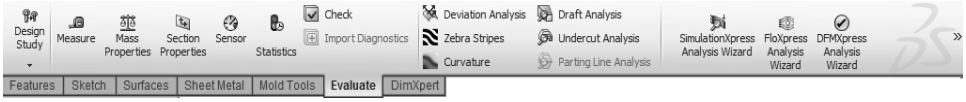

*Figure 1-15 The **Evaluate CommandManager***

Surfaces CommandManager

This CommandManager is used to create complicated surface features. These surface features can be converted into solid features. The **Surfaces CommandManager** is shown in Figure 1-16.



*Figure 1-16 The **Surfaces CommandManager***

Assembly Mode CommandManagers

The CommandManagers in the **Assembly** mode are used to assemble the components, create an explode line sketch, and simulate an assembly. The CommandManagers in the **Assembly** mode are discussed next.

Assembly CommandManager

This CommandManager is used to insert a component and apply various types of mates to an assembly. Mates are the constraints that can be applied to components to restrict their degrees of freedom. You can also move and rotate a component in an assembly, change the hidden and suppression states of the assembly and individual components, edit the component of an assembly, and so on. The **Assembly CommandManager** is shown in Figure 1-17.



*Figure 1-17 The **Assembly CommandManager***

Layout CommandManager

The tools in this CommandManager (Figure 1-18) are used to create and edit blocks.

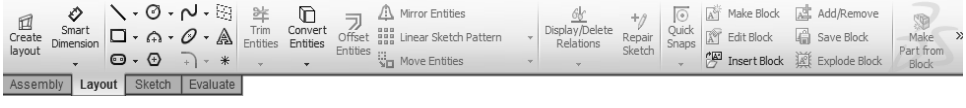

*Figure 1-18 The **Layout CommandManager***

Evaluation Copy. Do not reproduce. For information visit www.cadcim.com

Evaluation Copy. Do not reproduce. For information visit www.cadcim.com

Drawing Mode CommandManagers

You can invoke a number of CommandManagers in the **Drawing** mode. The CommandManagers that are extensively used during the designing process in this mode are discussed next.

View Layout CommandManager

This CommandManager is used to generate the drawing views of an existing model or an assembly. The views that can be generated using this CommandManager are model view, three standard views, projected view, section view, aligned section view, detail view, crop view, relative view, auxiliary view, and so on. The **View Layout CommandManager** is shown in Figure 1-19.

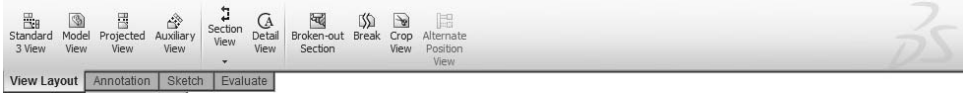

Figure 1-19 The View Layout CommandManager

Annotation CommandManager

The **Annotation CommandManager** is used to generate the model items and add notes, balloons, geometric tolerance, surface finish symbols, and so on to drawing views. The **Annotation CommandManager** is shown in Figure 1-20.

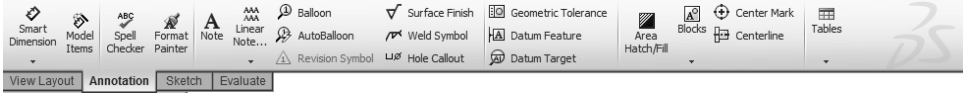

Figure 1-20 The Annotation CommandManager

Customized CommandManager

If you work on a particular set of tools often, you can create a customized CommandManager to cater to your needs. To do so, right-click on a tab in the CommandManager; a shortcut menu will be displayed. Choose the **Customize CommandManager** option from the shortcut menu; the **Customize** dialog box will be displayed. Also, a new tab will be added to the CommandManager. Click on this tab; a flyout with **Empty Tab** as the first option followed by the list of toolbars will be displayed. Choose the **Empty Tab** option; another tab with the name **New Tab** will be added to the CommandManager. Rename the new tab. Next, choose the **Commands** tab from the **Customize** dialog box. Select a command from the **Categories** list box; the tools of the corresponding command will be displayed in the **Buttons** area. Select a tool, press and hold the left mouse button, and drag the tool to the customized CommandManager; the tool will be added to the customized CommandManager. Choose **OK** from the **Customize** dialog box.

To add all tools of a toolbar to the new CommandManager, invoke the **Customize** dialog box and click on the new tab; a flyout with **Empty Tab** as the first option followed by the list of toolbars will be displayed. Choose a toolbar from the flyout; all tools in the toolbar will be added to the **New Tab** and its name will be changed to that of the toolbar.

To delete a customized CommandManager, invoke the **Customize** dialog box as discussed earlier. Next, choose the **CommandManager** tab to be deleted and right-click; a shortcut menu will be displayed. Choose the **Delete** option from the shortcut menu; the **CommandManager** will be deleted.

Note
You cannot delete the default CommandManagers.

TOOLBAR

In SolidWorks, you can choose most of the tools from the CommandManager or from the SolidWorks menus. However, if you hide the CommandManager to increase the drawing area, you can use toolbars to invoke a tool. To display a toolbar, right-click on a CommandManager; the list of toolbars available in SolidWorks will be displayed. Select the required toolbar.

Pop-up Toolbar

This toolbar was introduced in SolidWorks 2008. If you select a feature or an entity and do not move the mouse; a pop-up toolbar will be displayed. Figure 1-21 shows a pop-up toolbar displayed on selecting a feature. Remember that this toolbar will disappear, if you move the cursor away from the selected feature or entity.

You can switch off the display of the pop-up toolbar. To do so, invoke the **Customize** dialog box. In the **Context toolbar settings** area of the **Toolbars** tab, the **Show on selection** check box will be selected by default. It means the display of the pop-up toolbar is on, by default. To turn off the display of the pop-up toolbar, clear this check box and choose the **OK** button.

View (Heads-Up) Toolbar

In SolidWorks, some of the display tools have been grouped together and displayed in the drawing area, as shown in Figure 1-22. This toolbar is known as the **View (Heads-Up)** toolbar.



Figure 1-21 *The pop-up toolbar*



Figure 1-22 *The* ***View (Heads-Up)*** *toolbar*

Customizing the CommandManagers and Toolbars

In SolidWorks, all buttons are not displayed by default in toolbars or CommandManagers. You need to customize and add buttons to them according to your need and specifications.

Follow the procedure given below to customize the CommandManagers and toolbars:

1. Choose **Tools > Customize** from the SolidWorks menus to display the **Customize** dialog box. Alternatively, right-click on a CommandManager and then choose the **Customize** option, which is at the end of the toolbars list, to display the **Customize** dialog box.

Evaluation Copy. Do not reproduce. For information visit www.cadcim.com

2. Choose the **Commands** tab from the **Customize** dialog box.
3. Select a name for the toolbar from the **Categories** area of the **Customize** dialog box; the tools available in the toolbars are displayed in the **Buttons** area.
4. Click on a button in the **Buttons** area; the description of the selected button is displayed in the **Description** area.
5. Press the left mouse button on a button in the **Buttons** area of the **Customize** dialog box and drag the mouse to a CommandManager or a toolbar. Then release the left mouse button to place the button on that CommandManager or toolbar. Next, choose **OK**.

To remove a tool from the CommandManager or toolbar, invoke the **Customize** dialog box and drag the tool that you need to remove from the CommandManager to the graphics area.

Shortcut Bar

When you press the S key on the keyboard, some of the tools that can be used in the current mode are displayed near the cursor. This is called as shortcut bar.

Mouse Gestures

In SolidWorks, when you press the right mouse button and drag the cursor in any direction, a set of tools arranged radially are displayed. This action is called Mouse Gestures. After displaying the tools by using the Mouse Gestures, move the cursor over a particular tool to invoke it. By default, four tools will be displayed during a Mouse Gesture. However, you can display eight tools by customizing the Mouse Gesture. To customize the Mouse Gesture, invoke the **Customize** dialog box and choose the **Mouse Gestures** tab. Next, specify the options in the appropriate fields and choose the **OK** button. Figure 1-23 shows the tools that are displayed by using the Mouse Gesture (after customizing) in different environments.



Figure 1-23 *Tools displayed by using the Mouse Gestures in different environments*



Tip. *You can display some of the tools by pressing a key on the keyboard. To assign a shortcut key to a tool, invoke the* ***Customize*** *toolbar and choose the* ***Keyboard*** *tab. Enter the key in the* ***Shortcut*** *column for the corresponding tool and choose* ***OK***.

Evaluation Copy. Do not reproduce. For information visit www.cadcim.com

DIMENSIONING STANDARD AND UNITS

While installing SolidWorks, you can specify units and dimensioning standards for dimensioning a model. There are various dimensioning standards such as MKS, CGS, MMGS, and IPS that can be specified for dimensioning a model and units such as millimeters, centimeters, inches, and so on. This book follows inch as the unit for dimensioning and IPS as the dimensioning standard. Therefore, it is recommended that you install SolidWorks with IPS as the dimensioning standard and inch as units.

IMPORTANT TERMS AND THEIR DEFINITIONS

Before you proceed further in SolidWorks, it is very important to understand the following terms:

Geometric Relations

Geometric relations are the logical operations that are performed to add a relationship (like tangent or perpendicular) between sketched entities, planes, axes, edges, or vertices. While adding relations, one entity can be a sketched entity and the other entity can be a sketched entity, or an edge, face, vertex, origin, plane, and so on. There are two methods to create geometric relations, Automatic Relations and Add Relations.

Automatic Relations

The sketching environment of SolidWorks has been provided with the facility of applying auto relations. This facility ensures that geometric relations are applied to the sketch automatically while creating it. Automatic relations are also applied in the **Drawing** mode while working with interactive drafting.

Add Relations

Add relations are used to add geometric relations to the sketch manually. The sixteen types of geometric relations that can be applied manually to the sketch are as follows:

Horizontal

This relation forces a selected line segment to become a horizontal line. You can also select two points and force them to be aligned horizontally.

Vertical

This relation forces a selected line segment to become a vertical line. You can also select two points and force them to be aligned vertically.

Collinear

This relation forces the two selected entities to be placed in the same line.

Coradial

This relation is applied to any two selected arcs, two circles, or an arc and a circle to force them to become equi-radius and to share the same centerpoint.

Evaluation Copy. Do not reproduce. For information visit www.cadcim.com

Evaluation Copy. Do not reproduce. For information visit www.cadcim.com

Perpendicular
This relation is used to make a selected line segment perpendicular to another selected segment.

Parallel
This relation is used to make a selected line segment parallel to another selected segment.

Tangent
This relation is used to make the selected line segment, arc, spline, circle, or ellipse tangent to another arc, circle, spline, or ellipse.

Concentric
This relation forces two selected arcs, circles, a point and an arc, a point and a circle, or an arc and a circle to share the same centerpoint.

Midpoint
This relation forces a selected point to be placed on the midpoint of a line.

Intersection
This relation forces a selected point to be placed at the intersection of two selected entities.

Coincident
This relation makes two points, a point and a line, or a point and an arc coincident.

Equal
The equal relation forces the two selected lines to become equal in length. This relation is also used to force two arcs, two circles, or an arc and a circle to have equal radii.

Symmetric
The symmetric relation forces the selected entities to become symmetrical about a selected centerline, so that they remain equidistant from the centerline.

Fix
This relation is used to fix a selected entity to a particular location with respect to the coordinate system of the current sketch. The endpoints of the fixed line, arc, spline, or elliptical segment are free to move along the line.

Pierce
This relation forces the sketched point to be coincident with the selected axis, edge, or curve where it pierces the sketch plane. The sketched point in this relation can be the endpoint of the sketched entity.

Merge
This relation is used to merge two sketched points or endpoints.

Library Feature

Generally, in a mechanical design, some features are used frequently. In most of the other solid modeling tools, you need to create these features whenever you need them. However, SolidWorks allows you to save these features in a library so that you can retrieve them whenever you need. This saves a lot of designing time and effort of a designer.

Collision Detection

Collision detection is used to detect interference and collision between the parts of an assembly when the assembly is in motion. While creating an assembly in SolidWorks, you can detect collision between parts by moving and rotating them.

What's Wrong Functionality

While creating a feature of the model or after editing a feature created earlier, if the geometry of the feature is not compatible and the system is not able to construct that feature, then the **What's Wrong** functionality is used to detect the possible error that may have occurred while creating the feature.

Physical Dynamics

The Physical Dynamics is used to observe the motion of an assembly. With this option selected, the component dragged in an assembly applies a force to the component that it touches. As a result, the other component moves or rotates within its allowable degrees of freedom.

Physical Simulation

The Physical Simulation is used to simulate the assemblies created in the assembly environment of SolidWorks. You can assign and simulate the effect of different simulation elements such as linear, rotary motors, and gravity to the assemblies. After creating a simulating assembly, you can record and replay the simulation.

FeatureManager design tree

The **FeatureManager design tree** is one the most important components of SolidWorks screen. It contains information about default planes, materials, lights, and all features that are added to a model. When you add features to a model using various modeling tools, the features added are also displayed in the **FeatureManager design tree**. You can easily select and edit the features using the **FeatureManager design tree**. When you invoke any tool to create a feature, the **FeatureManager design tree** is replaced by the respective PropertyManager. At this stage, the **FeatureManager design tree** is displayed in the drawing area.

Absorbed Features

The features that are directly involved in creating other features are known as absorbed features. For example, the sketch of an extruded feature is an absorbed feature of the extruded feature.

Evaluation Copy. Do not reproduce. For information visit www.cadcim.com

Evaluation Copy. Do not reproduce. For information visit www.cadcim.com

Child Features

The features that depend on their parent feature and cannot exist without their parent features are known as child features. For example, consider a model with extrude feature and filleted edges. If you delete the extrude feature, the fillet feature will also be deleted because it cannot exist without its parent feature.

Dependent Features

Dependent features are those features that depend on their parent feature but can still exist without the parent feature with some minor modifications. If the parent feature is deleted, then you can retain the dependent features by specifying other references and modifying the feature.

AUTO BACKUP OPTION

SolidWorks also allows you to set the option to save the SolidWorks document automatically after a regular interval of time. While working on a design project, if the system crashes, you may lose the unsaved design data. If the auto-backup option is turned on, your data will be saved automatically after regular intervals. To turn this option on, choose **Tools > Options** from the SolidWorks menus; the **System Options - General** dialog box will be displayed. Select the **Backup/Recover** option from the display area provided on the left of this dialog box. Next, choose the **Save auto recover info every** check box. The spinner and the drop-down list provided on the right of the check box will be enabled. Use the spinner and the drop-down list to set the number of changes or minutes after which the document will be saved automatically. By default, the backup files are saved at the following location: *X:\Users\<name of your machine>\Local\TempSWBackupDirectory\swxauto* (where *X* is the drive in which you have installed SolidWorks 2011 and the *Local Settings* folder is a hidden folder). You can also change the path of this location. To change this path, choose the button on the right of the edit box; the **Browse For Folder** dialog box will be displayed. Using this dialog box, you can specify the location of the folder to save the backup files. If you need to save the backup files in the current folder, select the **Number of backup copies per document** check box and then the **Save backup files in the same location as the original** radio button. You can set the number of backup files that you need to save using the **Number of backup copies per document** spinner. After setting all options, choose the **OK** button from the **System Options - Backup/Recover** dialog box.

SELECTING HIDDEN ENTITIES

Sometimes while working on a model, you need to select an entity that is either hidden behind another entity or is not displayed in the current orientation of the view. SolidWorks allows you to select these entities using the **Select Other** option. For example, you need to select the back face of a model, which is not displayed in the current orientation. In such a case, you need to move the cursor over the visible face such that the cursor is also in line with the back face of the model. Now, right-click and then choose **Select Other** from the shortcut menu; the cursor will change to the select other cursor and the **Select Other** list box will be displayed. This list box displays all entities that can be selected. The item on which you move the cursor in the list box will be highlighted in the drawing area. You can select the hidden face using this box.

COLOR SCHEME

SolidWorks allows you to use various color schemes as the background color of the screen, color and display style of the **FeatureManager design tree**, and for displaying the entities on the screen. Note that the color scheme used in this book is neither the default color scheme nor the predefined color scheme. To set the color scheme, choose **Tools > Options** from the SolidWorks menus; the **System Options - General** dialog box will be displayed. Select the **Colors** option from the left corresponding to this dialog box; the option related to the color scheme will be displayed in the dialog box and the name of the dialog box will change to **System Options - Colors**. In the list box available in the **Color scheme settings** area, the **Viewport Background** option is available. Select this option and choose the **Edit** button from the preview area on the right. Select white color from the **Color** dialog box and choose the **OK** button. After setting the color scheme, you need to save it so that next time if you need to set this color scheme, you do not need to configure all the settings. You just need to select the name of the saved color scheme from the **Current color scheme** drop-down list. Choose the **Save As Scheme** button; the **Color Scheme Name** dialog box will be displayed. Enter **SolidWorks 2011** as the name of the color scheme in the edit box in the **Color Scheme Name** dialog box and choose the **OK** button. Next, choose the **OK** button from the **System Options - Colors** dialog box.



Note

In this textbook, the color scheme is based on Windows Vista as the operating system. So, if you are working on an operating system other than Windows Vista, the color of entities may be different from the one shown in this book.

INTRODUCTION TO THIS BOOK

SolidWorks is a software package that helps engineers and designers in various industries such as aerospace, automotive, consumer products, energy, engineering services, industrial equipment, manufacturing, and so on to meet high-quality and innovative design requirements of real-world models. However, this textbook aims to assist students, designers, engineers, and professionals in their design works.

The textbook provides introduction to the user interface as well as the concepts and modeling techniques of SolidWorks for creating parts, assemblies, and drawings. The author has adopted a project based approach to create a real-world model. This approach helps you in creating various components of a motor cycle and then assemble them to develop the complete model of a motor cycle. Once the model has been developed completely, you will learn how to generate their drawing views. This unique method makes the learning process simple and effective for both novice as well as advanced users of the software.

Throughout the book, the author has followed a step-by-step procedure to create models, develop assemblies, and generate their drawing views. Also, the author has given explanations for the tools introduced for the first time, so that you can gain expertise and proficiency in SolidWorks. After completing this book, you will be able to apply concepts, use tools and combine the strategies and techniques of SolidWorks in your projects.

Evaluation Copy. Do not reproduce. For information visit www.cadcim.com

Figure 1-24 shows the final model of the motor cycle.



Figure 1-24 *The final model*

The components of the motor cycle model, which are discussed in various chapters of this textbook, are given next.

1. Axle
2. Disc Plate
3. Rim
4. Tire
5. Caliper Piston
6. Caliper Pad
7. Caliper Body
8. Fork Tube
9. Fork Cap
10. Fork Holder
11. Fork Bodies
12. Handlebar
13. Handle Holders
14. Muffler
15. Swing Arm
16. Clamp
17. Shock Absorber Cylinder
18. Shock Absorber Spring
19. Shock Absorber Piston Rod
20. Cylinder Head
21. Cylinder Head Cover
22. Crankcase Cover
23. Mudguards
24. Fuel Tank
25. Seat Cover
26. Headlight Mask

Among these parts, parts from point 1 to 22 will be created as solid models and the remaining parts will be created as surface models. All these models are created in the **Part** environment. After creating these models, you will assemble them in the **Assembly** environment to create the complete model of a motor cycle. Next, you will generate the drawing views of the final model in the **Drawing** environment.

Evaluation Copy. Do not reproduce. For information visit www.cadcim.com

SELF-EVALUATION TEST

Answer the following questions and then compare them to those given at the end of this chapter:

1. The **Part** mode of SolidWorks is a feature-based parametric environment in which solid models can be created. (T/F)

2. Generative drafting is the process of generating the drawing views of a part or an assembly created earlier. (T/F)

3. The tip of the day is displayed at the bottom of the task pane. (T/F)

4. In SolidWorks, solid models are created by integrating a number of building blocks, called features. (T/F)

5. You cannot customize the CommandManagers. (T/F)

6. The _____ property ensures that any modification made in a model in one of the modes of SolidWorks is also reflected in the other modes immediately.

7. The _____ relation forces two selected arcs, two circles, a point and an arc, a point and a circle, or an arc and a circle to share the same centerpoint.

8. The _____ relation makes two points, a point and a line, or a point and an arc coincident.

9. The _____ relation forces two selected lines to become equal in length.

10. The _____ **CommandManager** is used to draw sketches for features.

Evaluation Copy. Do not reproduce. For information visit www.cadcim.com

Answers to Self-Evaluation Test

1. T, **2.** T, **3.** T, **4.** T, **5.** F, **6.** bidirectional associativity, **7.** concentric, **8.** coincident, **9.** equal, **10. Sketch**

Evaluation Copy. Do not reproduce. For information visit www.cadcim.com