Chapter 2

Sketching, Dimensioning, and Creating Base Features and Drawings

Learning Objectives

After completing this chapter, you will be able to:

- *Start a new template file to draw sketches*
- *Set up the sketching environment*
- *Use various drawing display tools*
- *Understand the sketcher environment in the Part module*
- *Get acquainted with sketcher entities*
- *Specify the position of entities by using dynamic input*
- *Draw sketches by using various sketcher entities*
- *Delete sketched entities*
- *Dimension a sketch*
- *Extrude a sketch*
- *Generate drawing views*

THE SKETCHING ENVIRONMENT

Most of the designs created in Autodesk Inventor consist of sketched and placed features. A sketch is a combination of a number of two-dimensional (2D) entities such as lines, arcs, circles, and so on. The features such as extrude, revolve, and sweep that are created by using 2D sketches are known as sketched features. The features such as fillet, chamfer, thread, and shell that are created without using a sketch are known as placed features. In a design, the base feature or the first feature is always a sketched feature. For example, the sketch shown in Figure 2-1 is used to create the solid model shown in Figure 2-2. In this figure, the fillets and chamfers are the placed features.

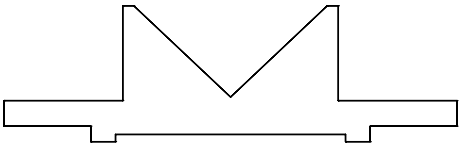

Figure 2-1 *The basic sketch for the solid model*

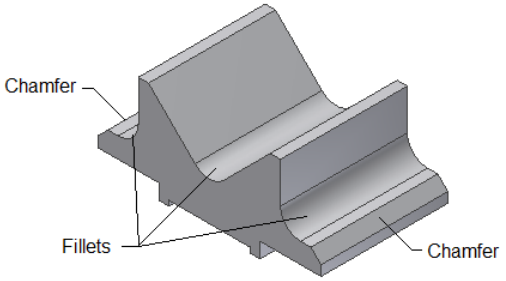

Figure 2-2 *A solid model created using the sketched and 3D model features*

Once you have drawn the basic sketch, refer to Figure 2-1, you need to convert it into a solid model using solid modeling tools.

You can create sketches in the Sketching environment. This environment of Autodesk Inventor can be invoked any time in the **Part** or **Assembly** module. Unlike other solid modeling programs, here you just need to invoke the **Start 2D Sketch** tool and specify the plane to draw sketch, the Sketching environment will be invoked. You can draw a sketch in this environment and then proceed to the part modeling environment for converting the sketch into a solid model. The options in the Sketching environment will be discussed later in this chapter.

Initial Interface of Autodesk Inventor

When you start Autodesk Inventor, the initial interface is displayed with the **Tools** tab chosen by default, as shown in Figure 2-3. The **Options** panel in this tab contains options such as **Application Options, Document Settings**, **Migrate Settings**, **Autodesk App Manager**, **Highlight New**, **Customize**, **Add-Ins**, and so on. The **Application Options** option is used to customize the Inventor interface and options by specifying different settings in the **Application Options** dialog box displayed on choosing this option. The **Document Settings** option is used to set the document parameters such as active styles, measurement units, and sketch and modeling preferences. **Autodesk App Manager** is used to view and update the installed Autodesk app. The **Highlight New** option is used to display badges over those commands in the **Ribbon** that have been added or updated in the current release. The **Customize** option is used to customize the **Ribbon**, Marking menu, and hot keys. By choosing the **Content Center Editor** option, you can customize the standard content copied to the user library or edit the user-published content. The **Batch Publish** option is used to publish a set of parts to the user content library

Evaluation Copy. Do not reproduce. For information visit www.cadcim.com

in batches. The **Supplier Content** option is used to connect to the Autodesk Manufacturing Community Supplier Content Center. Click on the **Inventor Ideas** option to connect to the Inventor ideas discussion group where you can share your ideas to improve the product quality with developer. The **iLogic Design Copy** option is used to copy the design containing i Logic rules. The **Team Web** option allows you to connect to a website or HTML file for easy access. You need to specify the respective website or HTML file link in the **Team WEB** area of the **File** tab in the **Application Options** dialog box.

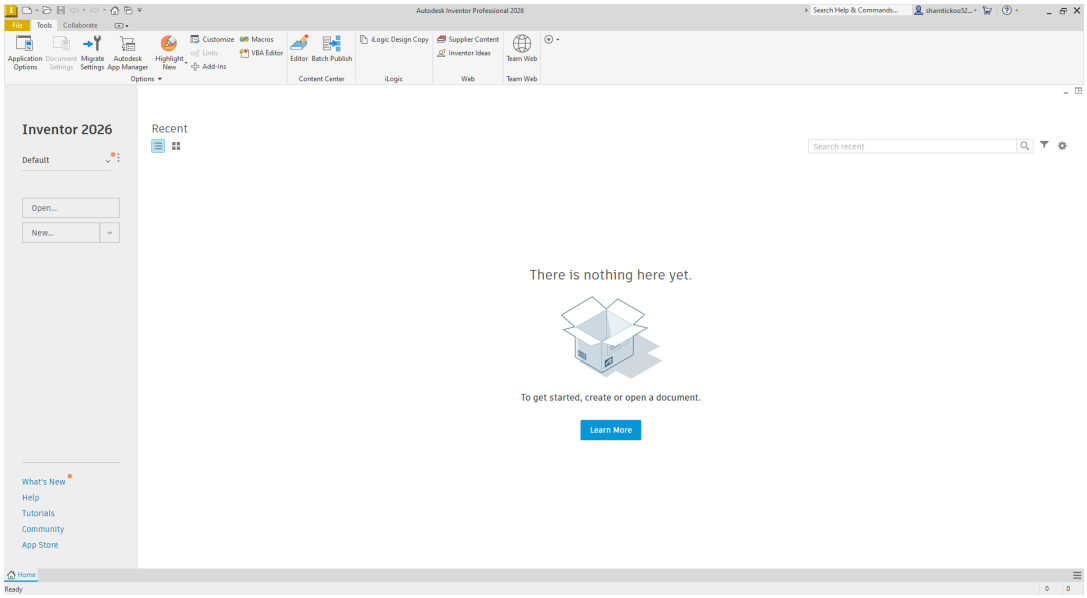

Figure 2-3 *The initial interface of* ***Autodesk Inventor Professional 2026***

Starting a New File



In Autodesk Inventor, you can start a new file by choosing the **New** button from the left pane of the initial interface. On choosing this button, the **Create New File** dialog box will be displayed, refer to Figure 2-4. Alternatively, you can start a new file by choosing the **New** tool from the **Quick Access Toolbar** or by choosing the **Start a new file** button from the **Open** dialog box. You will learn more about the **Open** dialog box later in this chapter.

Evaluation Copy. Do not reproduce. For information visit www.cadcim.com

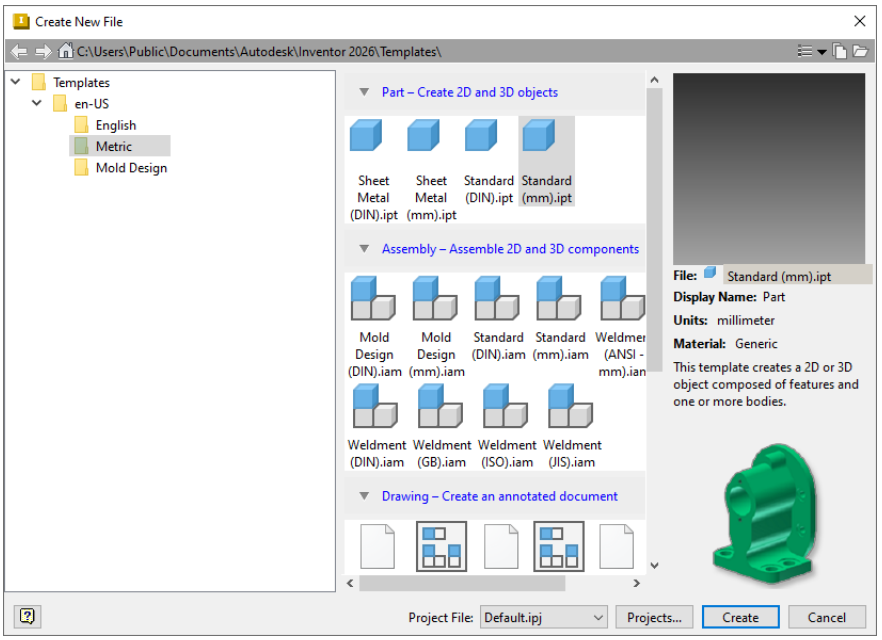

Figure 2-4 *The* ***Create New File*** *dialog box with the* ***Metric*** *node selected*

The options in the **Create New File** dialog box are used to select a template file for starting a design. You can select a template of English, Metric, or Mold Design standard. To start a new metric part file, select the **Metric** option that is available under the **Templates** node of the dialog box, refer to Figure 2-4. The templates that are available on selecting the **Metric** option are discussed next.

.ipt Templates

Select any *.ipt* template to start a new part file for creating a solid model or a sheet metal component.

.iam Templates

Select a *.iam* template to start a new assembly file for assembling various parts. Note that if you select the *Weldment.iam* template, the **Weldment** module of Autodesk Inventor will be started.

.ipn Templates

Select a *.ipn* template to start a new presentation file for animating the assembly. The **Presentation** module marks the basic difference between the Autodesk Inventor and other design tools. This module allows you to animate the assemblies created in the **Assembly** module. For example, you can create a presentation in the **Presentation** module that shows a Drill Press Vice assembly in motion.

.idw Templates

Select a *.idw* template to start a new drawing file for generating the drawing views. You can use the drawing templates of various standards that are provided in this tab, such as ANSI, ISO, DIN, GB, JIS, GOST, and BSI.

Evaluation Copy. Do not reproduce. For information visit www.cadcim.com

.dwg Templates

Select a *.dwg* template for creating AutoCAD drawing files. You can use the drawing templates of standards such as JIS, ISO, GB, DIN, BSI, and ANSI.

The **Project File** drop-down list in the **Create New File** dialog box displays the active project in which the new file has been started. The **Projects** dialog box can be invoked by choosing the **Projects** button from the **Create New File** dialog box.

The Open Dialog Box

The **Open** dialog box is used to open an existing file. To invoke this dialog box, choose the **Open** button from the left pane of the initial interface. The **Open** dialog box is shown in Figure 2-5.

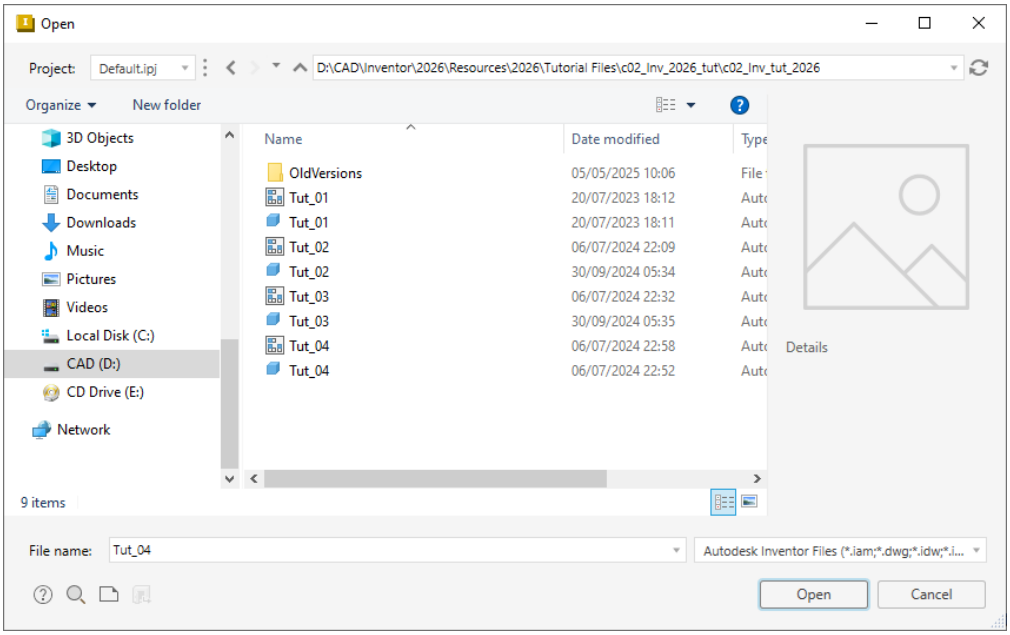

Figure 2-5 *The* ***Open*** *dialog box*

The options in the **Open** dialog box are used to open existing files. You can browse and select the file that you want to open. A preview of the selected file is displayed in the preview window located at the lower left portion in this dialog box, as shown in Figure 2-6. By default, you can open any file created in Autodesk Inventor as the **Autodesk Inventor Files (*.iam; *.dwg**, ***.idw**,***.ipt**, ***.ipn**, and ***.ide)** option is selected in the **Files of type** drop-down list. You can also open the files created in other solid modeling programs such as AutoCAD, Pro/ENGINEER and Creo Parametric, Alias, CATIA V5, SOLIDWORKS, NX, and so on by selecting the respective options from the **Files of type** drop-down list.

Evaluation Copy. Do not reproduce. For information visit www.cadcim.com

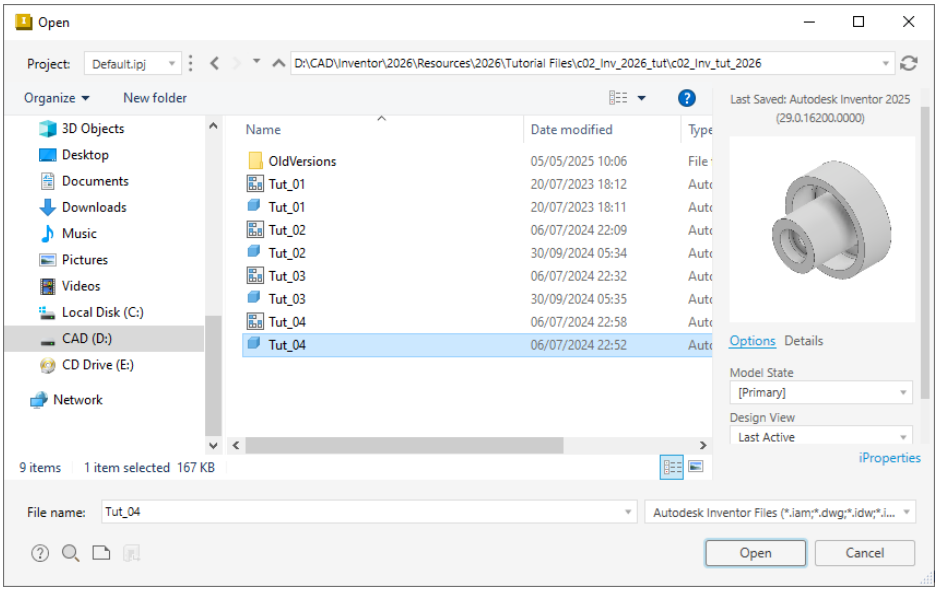

Figure 2-6 *The* ***Open*** *dialog box showing the preview of the selected file*

In addition to open an existing file, you can also start new files and setup a project by using the **Open** dialog box. To create a new file, choose the **Start a new file** button from this dialog box. On choosing this button; the **Create New File** dialog box will be displayed, as shown in Figure 2-7.

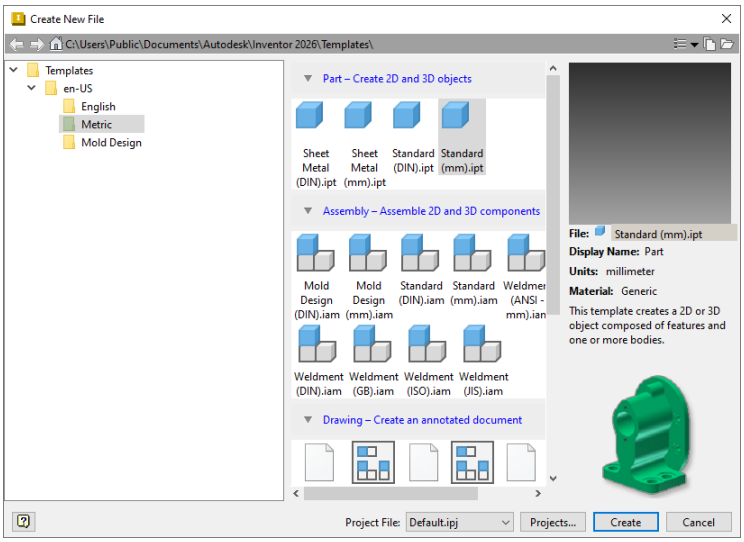

Figure 2-7 *The* ***Create New File*** *dialog box*

By using the **Open** dialog box, you can also invoke the **Projects** dialog box to setup a new project. To invoke the **Projects** dialog box, choose the **Projects** button available on the right of the **Project File** drop-down list in the **Open** dialog box. You will learn more about setting a project later in this chapter.

Evaluation Copy. Do not reproduce. For information visit www.cadcim.com

Setting a New Project

In Autodesk Inventor, a project defines all the files related to a design project you are working on. To create a new project or retrieve an existing project, choose the **Projects and Settings** button in the left pane of initial interface and then click on the **Settings** option from the menu displayed. On doing so, the **Projects** dialog box will be displayed, as shown in Figure 2-8. In this dialog box, all the project folders will be displayed in the upper half of the dialog box and the options regarding the selected project folder will be displayed in the lower half of the dialog box. To add another project folder to this list, choose the **New** button; the **Inventor project wizard** dialog box will be displayed. The **New Single User Project** radio button is selected by default in this dialog box. Choose the **Next** button from the **Inventor project wizard** dialog box. Specify the name of the project in the **Name** text box and the location in the **Project (Workspace) Folder** text box. You can also choose the **Browse for project location** button to specify the location of the project. Next, choose the **Finish** button. Once you have specified the project folder, it will be added to the upper part of the **Projects** dialog box and its location will be displayed. When you select a project, the options related to it will be shown in the lower part of the dialog box. The **Projects** dialog box with various projects is shown in Figure 2-8. Choose the **Done** button to close the **Projects** dialog box.

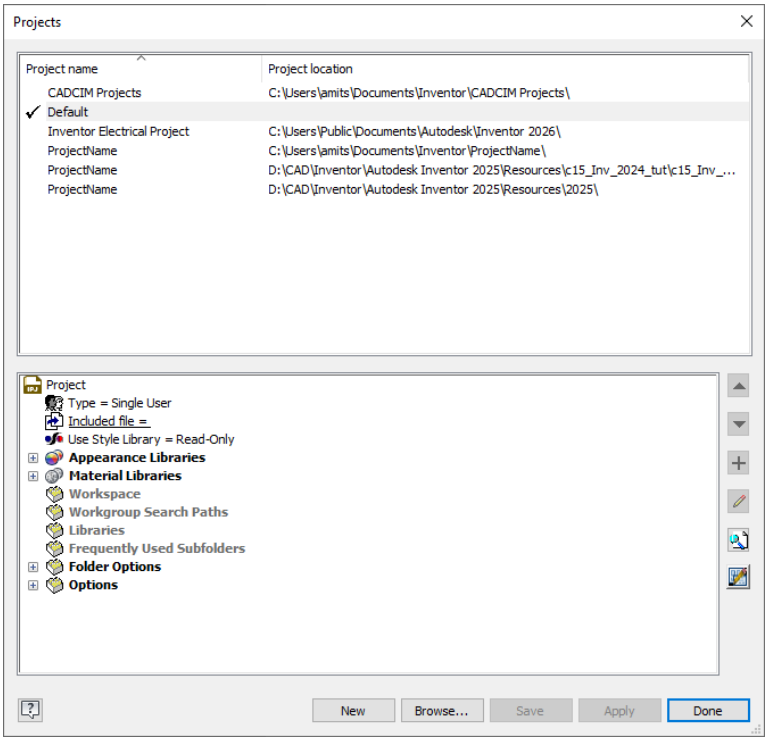

Figure 2-8 *The* ***Projects*** *dialog box*

To view the help topics, press F1; the **Autodesk Inventor Professional 2026 Help** page will be displayed. In this window, you will find help topics explaining how to use a particular tool or option of Autodesk Inventor.

Evaluation Copy. Do not reproduce. For information visit www.cadcim.com

Import DWG



In Autodesk Inventor, you can import the AutoCAD files. To do so, choose **Open > Import DWG** from the **File** menu; the **Import** dialog box will be displayed. Browse to the desired folder and import the required AutoCAD file.

INVOKING THE SKETCHING ENVIRONMENT

To invoke the Sketching environment, choose the **Start 2D Sketch** tool from the **Sketch** panel in the **3D Model** tab; three different planes namely XY Plane, YZ Plane, and XZ Plane will be displayed in the graphics window, as shown in Figure 2-9. Select the required plane from the graphics window to invoke the Sketching environment.

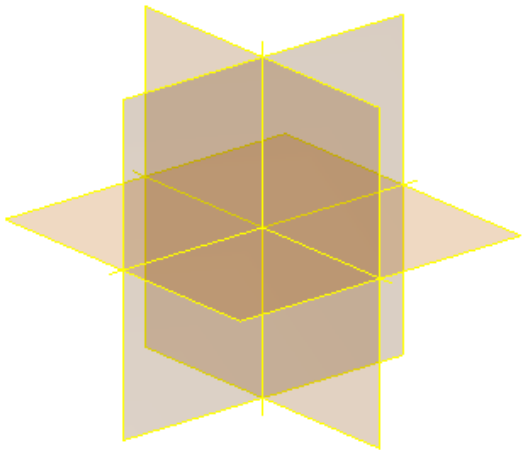

Figure 2-9 *Three different planes displayed in the graphics window*

INTRODUCTION TO THE SKETCHING ENVIRONMENT

The initial interface appearance in the Sketching environment of a *Standard (mm).ipt* file after selecting the **XY Plane** as the sketching plane is shown in Figure 2-10. By default, the **Ribbon** is placed at the top of the graphics window, refer to Figure 2-10. You can move this **Ribbon** anywhere in the graphics window. To do so, right-click on the **Ribbon**; a shortcut menu will be displayed. Choose the **Undock Ribbon** option from the shortcut menu; the **Ribbon** will be undocked. Now, you can drag the **Ribbon** anywhere in the graphics window. It is recommended to place (dock) the **Ribbon** at the top of the graphics window so that you can use the space efficiently. To do so, right-click on the **Ribbon** and choose **Dock to Top** from the shortcut menu.

Evaluation Copy. Do not reproduce. For information visit www.cadcim.com

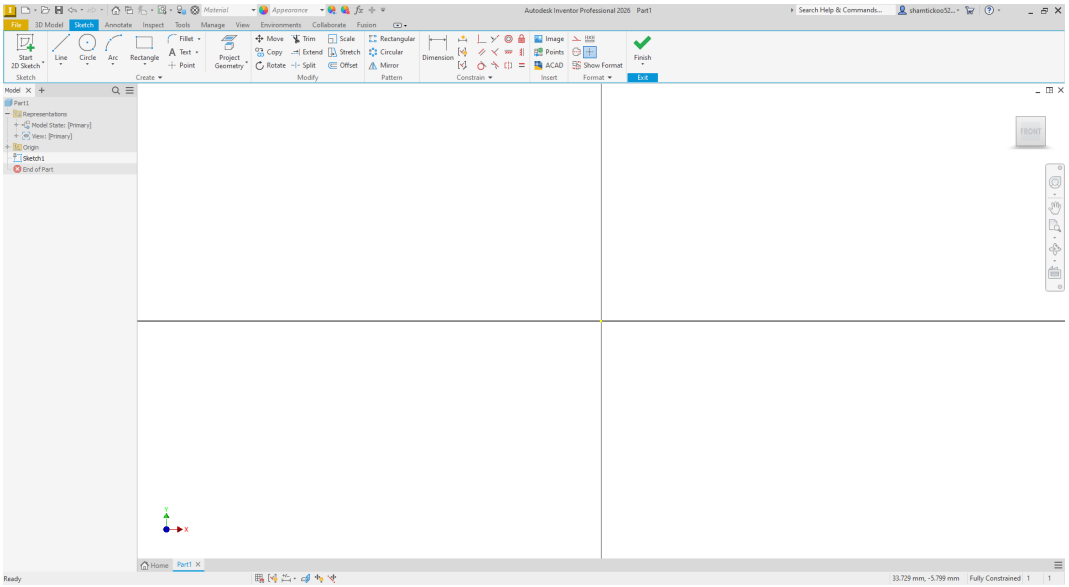

Figure 2-10 *Initial interface appearance in the Sketching environment*

SETTING UP THE SKETCHING ENVIRONMENT

It is very important to first set up the Sketching environment. This has to be done before you start drawing a sketch. Setting up the Sketching environment includes modifying the grids of a drawing. It is unlikely that the designs that you want to create consist of small dimensions. You will come across a number of designs that are large. Therefore, before starting a drawing, you need to modify the grid settings. These settings will depend on the dimensions of the design. The process of modifying the grid settings of a drawing is discussed next.

Modifying the Document Settings of a Sketch

Before sketching, you may need to modify the settings of the Sketching environment according to your requirement. You can change the snapping distance, grid spacing, and various attributes related to line display of the Sketching environment. To display the grid lines in the Sketching environment, choose the **Application Options** tool from the **Options** panel of the **Tools** tab; the **Application Options** dialog box will be invoked. Now, select the **Grid lines** check box from the **Display** area of the **Sketch** tab and choose the **OK** button. You will notice that the graphics window in the Sketching environment consists of a number of light and dark lines that are normal to each other. These normal lines are called Grid lines. The Grid lines help you locate an entity thereby helping you to draw a sketch correctly or modify an existing sketch precisely.

You can also modify the document settings of a sketch. To do so, choose the **Document Settings** tool from the **Options** panel of the **Tools** tab; the **Part1 Document Settings** dialog box will be displayed. In this dialog box, choose the **Sketch** tab to display the options related to the Sketching environment, refer to Figure 2-11. The options under this tab are discussed next.

Evaluation Copy. Do not reproduce. For information visit www.cadcim.com

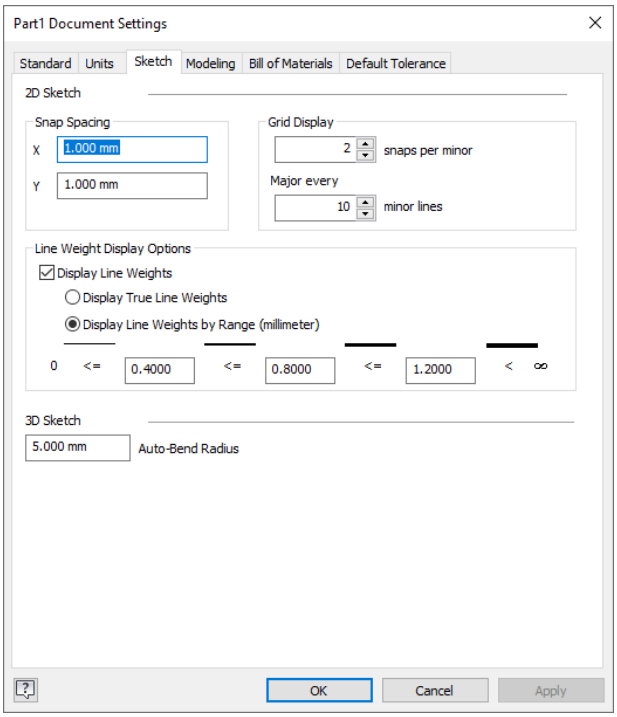

Figure 2-11 *The* ***Part1 Document Settings*** *dialog box with the* ***Sketch*** *tab chosen*

Snap Spacing

The options under this area are used to specify the snap distances.

X Edit

This edit box is used to specify the snap spacing in the X direction.

Y Edit

This edit box is used to specify the snap spacing in the Y direction.

Grid Display

The options in this area are used to control the number of major and minor lines. The minor lines are the light lines that are displayed inside the dark gray lines. The dark gray lines are called the major lines.

Snaps per minor

This spinner is used to specify the number of snap points between each minor line.

Major every minor lines

This spinner is used to specify the number of minor lines between two major lines.

Evaluation Copy. Do not reproduce. For information visit www.cadcim.com

Line Weight Display Options

The options in the **Line Weight Display Options** area allow you to control the line weight in the Sketching environment. The **Display Line Weights** check box is selected by default and displays the sketches with the set line weights. If this check box is cleared, then the differences in the line weights will not be displayed in the sketch. The **Display True Line Weights** radio button is used to display the line weights on screen as they would appear on paper when printed. The **Display Line Weights by Range (millimeter)** radio button, if selected, displays the line weights according to the values entered.



Tip

*You can also turn off the display of the major and minor grid lines and the axes. To turn off the display of the grid line and the axes, choose the **Application Options** tool from the **Options** panel; the **Application Options** dialog box will be displayed. Next, choose the **Sketch** tab and clear the **Grid lines**, **Minor grid lines**, and **Axes** check boxes from the **Display** area.*

SKETCHING ENTITIES

Getting acquainted with the sketching entities is an important part of learning Autodesk Inventor. The major part of a design is created using the sketch entities. Therefore, this section can be considered as one of the most important sections of the book. In Autodesk Inventor, the sketched entities are of two types: Normal and Construction. The normal entities are used to create a feature and become a part of it, but the construction entities are drawn just for reference and support, and cannot become a part of the feature. By default, all the drawn entities are normal entities. To draw construction entities, choose the **Construction** tool from the **Format** panel of the **Sketch** tab. All the entities drawn after choosing the **Construction** tool will be the construction entities. Deselect this tool by choosing it again to draw normal entities.

POSITIONING ENTITIES BY USING DYNAMIC INPUT

In Autodesk Inventor, you can specify the position of sketching entities by using the Dynamic Input which consists of two components: Pointer Input and the Dimension Input. The Pointer Input is displayed when you invoke the sketching tools such as **Line**, **Rectangle**, **Arc**, and it displays the coordinates of the current location of the cursor. As you move the cursor, the coordinates change dynamically. When you specify the first point, the Pointer Input is displayed. The Pointer Input is displayed in the form of Cartesian Coordinates (X and Y). If you specify the second point or the subsequent points of entities, the Dimension Input will be displayed. The Dimension Input is displayed in the form of polar coordinates (Length and Angle). To specify the position of sketching entities dynamically, invoke the required sketching tool and then move the cursor in the graphics window; the location of the cursor will be displayed in the Cartesian coordinate in the Pointer Input. Press the Tab key and enter the X and Y coordinate values in the Pointer Input to specify the first point; you will be prompted to specify the endpoint or second point of the entity. Alternatively, you can specify the first point of the entity by clicking in the graphics window. On doing so, the Pointer Input will be modified to the Dimension Input and the polar coordinate input fields will be displayed. To specify the endpoint or second point of the entity, enter the length and angle values in the input fields. To toggle between the length and angle input fields, use the Tab key. If you specify input values by using the Dimension Input and then use the Tab key, lock icons will be displayed on the right of the input fields. The lock

Evaluation Copy. Do not reproduce. For information visit www.cadcim.com

icons indicate that the values defined are constrained. Figure 2-12 shows the Pointer Input of a line and Figure 2-13 shows the Dimension Input of the endpoint of a line of length 20 mm at an angle of 45 degrees.

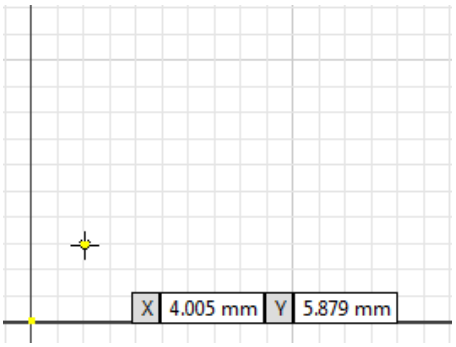

Figure 2-12 *Pointer Input of a line*

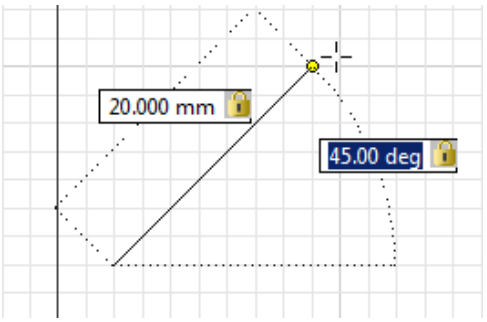

Figure 2-13 *Dimension Input of the endpoint of a line of length 20 mm at 45 degrees*

If there are some sketched entities already exist in the graphics window and you start creating more entities in the graphics window, an appropriate constraint symbol will be displayed near the cursor. You can control the display of the Pointer Input and Dimension Input by using the **Application Options** dialog box. This dialog box can be invoked by choosing the **Application Options** tool from the **Options** panel of the **Tools** tab. To control the display of Pointer Input and Dimension Input, choose the **Sketch** tab in the **Application Options** dialog box. Clear the **Enable Heads-Up Display (HUD)** check box from the **Sketch** tab and choose the **OK** button from this dialog box. As a result, the display of Pointer Input and Dimension Input will be turned off and now you cannot enter the input values of the entities dynamically.

The sketcher entities in Autodesk Inventor are discussed next.

Drawing Lines

Ribbon: Sketch > Create > Line/Spline drop-down > Line



Lines are basic and one of the most important entities in the sketching environment. As mentioned earlier, you can draw either normal lines or construction lines. A line is defined as the shortest distance between two points. The two points are the start point and the endpoint of the line. Therefore, to draw a line, you need to define these two points. The parametric nature of Autodesk Inventor allows you to draw the initial line of any length or at any angle by just picking the points on the screen. After drawing the line, you can drive it to a new length or angle by using parametric dimensions. You can also create the line of actual length and angle directly by using the **Inventor Precise Input** toolbar. Both the methods of drawing the lines are discussed next.

Drawing a Line by Picking Points in the Graphics Window

This is a very convenient method to draw lines and is used extensively while sketching. When you invoke the **Line** tool from the **Create** panel, the cursor (which was initially an arrow) is replaced by crosshairs with a yellow circle at the intersection. Alternatively, you can choose the **Create Line** tool from the Marking menu which is displayed when you right-click anywhere in

Evaluation Copy. Do not reproduce. For information visit www.cadcim.com

the graphics window. On doing so, you are prompted to select the start point of the line. In addition, the coordinates of the current location of the cursor are displayed in the Pointer Input and also at the lower right corner of the Autodesk Inventor window. The point of intersection of the X and Y axes (black lines among grid lines) is the origin point. If you move the cursor close to the origin, it will snap to the origin automatically. To draw a line, specify a point anywhere in the graphics window; the Pointer Input will display both length and angle values as zero. Move the cursor; a rubber-band line will start from the specified point and the length and angle values will change accordingly in the Pointer Input. One end of this rubber-band line is fixed at the point specified in the graphics window and the other end is attached to the yellow circle in crosshairs. As you move the cursor after specifying the start point of the line, the Pointer Input will display the length and angle of the current location of the line. Click at the required position in the graphics window. Alternatively, enter the required length and angle values in the Pointer Input to specify the endpoint of the line. You can use the Tab key to toggle between the length and angle values in the Pointer Input.

After specifying the endpoint of the line, a line is drawn and a new rubber-band line starts. The start point of the new rubber-band line is the endpoint of the last line and you are again prompted to specify the endpoint of the line. You can continue specifying the endpoints to draw continuous lines.

When you draw entities in Autodesk Inventor, valid constraints are applied automatically to the entities. Therefore, when you draw continuous lines, the horizontal, vertical, perpendicular, and parallel constraints are automatically applied to them. The symbol of the applied constraint is displayed on the line while drawing it. You can exit the **Line** tool by pressing the Esc key. Alternatively, you can exit the **Line** tool by right-clicking anywhere in the graphics window; a Marking menu will be displayed. Next, choose **OK** from the Marking menu. Figures 2-14 and 2-15 display the Perpendicular Constraint and Parallel Constraint, respectively being applied to the lines while they are being drawn.

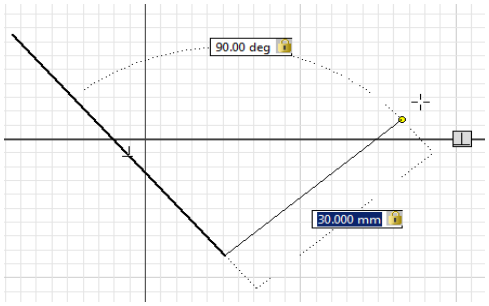

Figure 2-14 *Drawing a line using the Perpendicular constraint*

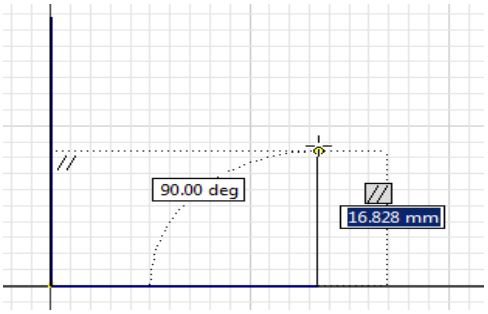

Figure 2-15 *Drawing a line using the Parallel constraint*



Note

The default screen appearance in the Sketching environment can be modified for clarity. To do so, choose the ***Application Options*** *tool from the* ***Options*** *panel of the* ***Tools*** *tab; the* ***Application Options*** *dialog box will be displayed. In the dialog box, choose the* ***Colors*** *tab and then select the* ***Presentation*** *option from the* ***In-canvas Color Scheme*** *list box. Next, select* ***1 Color*** *from the* ***Background*** *drop-down list, and then choose the* ***Apply*** *button from the* ***Application Options*** *dialog box. The default appearance of the screen is changed in the Sketching environment.*

Evaluation Copy. Do not reproduce. For information visit www.cadcim.com

In Inventor, you can close a sketch that has two or more than two lines. To do so, if you have drawn two or more than two continuous lines in the drawing area then on selecting the **Close** option from the Marking menu; a line joining the endpoint of the current line and the start point of the first line will be created and the sketch will be closed. Figure 2-16 shows the **Close** option being chosen from the Marking menu to close the sketch and Figure 2-17 shows the closed sketch created. Note that the **Close** option will not be displayed in the Marking menu once you terminate the creation of continuous lines.

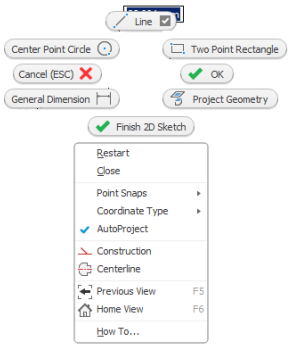

Figure 2-16 *Choosing the* ***Close*** *option from the Marking menu*

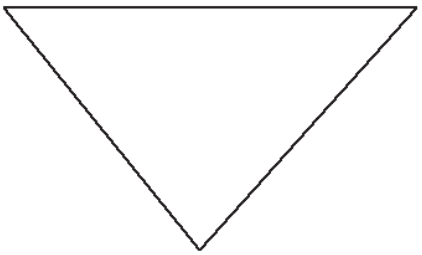

Figure 2-17 *Closed sketch created*

Drawing a Line by using the Inventor Precise Input Toolbar

This is another method of drawing lines in Autodesk Inventor. In this method, you use the **Inventor Precise Input** toolbar to define the coordinates of the start point and the endpoint of lines. To display the **Inventor Precise Input** toolbar for the line, first invoke the **Line** tool. Next, click on the down arrow displayed at bottom of the **Create** panel in the **Sketch** tab; the **Create** panel will expand. Choose the **Precise Input** tool from this panel. As mentioned earlier, the origin of the drawing lies at the intersection of the X and Y axes. The X and Y coordinates of this point are 0, 0. You can take the reference of this point to draw lines. There are two methods to define the coordinates using this toolbar. Both the methods are discussed next.

Specifying Coordinates with respect to the Origin

The system that define the coordinates with respect to the origin of the drawing is termed as the absolute coordinate system. By default, the origin lies at the intersection of the X and Y axes. All the points in this system are defined with respect to this origin. To define the points, you can use the following four methods.

Defining the Absolute X and Y Coordinates: In this method, you will define the X and Y coordinates of the new point with respect to the origin. To invoke this method, select the **Indicate a point location by typing X and Y values** option from the drop-down list in the **Inventor Precise Input** toolbar. The exact X and Y coordinates of the point can be entered in the **X** and **Y** edit boxes provided in this toolbar.

Defining the Absolute X Coordinate and the Angle from the X Axis: In this method, you will define the absolute X coordinate of a point with respect to the origin and the angle that this line makes with the positive X axis. The angle will be measured in the

Evaluation Copy. Do not reproduce. For information visit www.cadcim.com

counterclockwise direction from the positive X axis. To invoke this method, select the **Specify a point using X coordinate and angle from X axis** option from the drop-down list. The X coordinate of the new point and the angle can be defined in the respective edit boxes in the **Inventor Precise Input** toolbar.

Defining the Absolute Y Coordinate and the Angle from the X Axis: In this method, you will define the absolute Y coordinate of a point with respect to the origin and the angle that this line makes with the positive X axis. To invoke this method, select the **Specify a point using Y coordinate and angle from X axis** option from the drop-down list. The Y coordinate of the new point and the angle can be defined in the respective edit boxes in the **Inventor Precise Input** toolbar.

Specifying the Distance from the Origin and the Angle from the X Axis: In this method, you will define the distance of the point from the origin and the angle that this line makes with the X axis. To invoke this method, select the **Specify a point using distance from the origin and angle from X axis** option from the drop-down list. The distance and the angle can be defined in the respective edit boxes.

Specifying Coordinates with respect to the Last Point

This system of specifying the coordinates with respect to the previous point is termed as the relative coordinate system. Note that this system of defining the points cannot be used for specifying the first point (the start point of the line). All absolute coordinate methods for specifying a point with respect to the origin can also be used with respect to the last specified point by choosing the **Precise Delta** button along with the respective method. This button will be available only after you specify the start point of the first line. The **Reset To Origin** button moves the triad to the origin of the sketch (0,0,0). The **Precise Redefine** button is used to enter a point relative to the coordinate origin.



Note

1. While drawing continuous lines, when you move the cursor close to the start point of the first line, the color of yellow circle changes to green and the cursor snaps to the start point. On selecting the point at this stage, the loop will be closed and you will exit the current line chain.

*2. To draw center lines, first choose the **Centerline** tool from the **Format** panel and then create lines. Alternatively, select the required entities from the graphics window and then choose the **Centerline** tool from the Marking menu; the selected entities will become center lines.*

Restarting a Line

To restart a line, right-click in the graphics window and choose **Restart** from the Marking menu; the start point of the line is cancelled and you are prompted to select the start point of the line.

Drawing Circles

In Autodesk Inventor, you can draw circles by using two methods. You can draw a circle by defining the center and the radius of the circle or by drawing a circle that is tangent to three specified lines. Both these methods of drawing the circle are discussed next.

Evaluation Copy. Do not reproduce. For information visit www.cadcim.com

Drawing a Circle by Specifying the Center Point and Radius

Ribbon: Sketch > Create > Circle drop-down > Circle Center Point

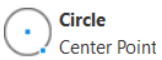

This is the default method of drawing circles. In this method, you need to define the center point and radius of a circle. To draw a circle using this method, choose the **Circle Center Point** tool from the **Create** panel, refer to Figure 2-18; you will be prompted to select the center of the circle. Specify the center point of the circle in the graphics window; you will be prompted to specify a point on the circle. Click at the required location in the drawing window to specify a point on the circumference of the circle. This point will define the radius of the circle. Alternatively, enter the required value in the Pointer Input to specify the diameter of the circle. Figure 2-19 shows a circle drawn by using the center and the radius.

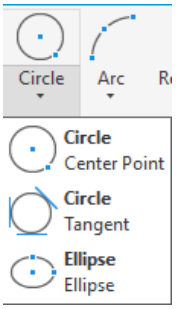

Figure 2-18 *Tools in the* ***Circle*** *drop-down*

Drawing a Circle by Specifying Three Tangent Lines

Ribbon: Sketch > Create > Circle drop-down > Circle Tangent



The second method of drawing circles is used to draw it tangent to three selected lines. To draw a circle using this method, choose the **Circle Tangent** tool from the **Create** panel, refer to Figure 2-18; you will be prompted to select the first, second, and third line, sequentially. As soon as you specify the third line, a circle tangent to all the three specified lines will be drawn, as shown in Figure 2-20.

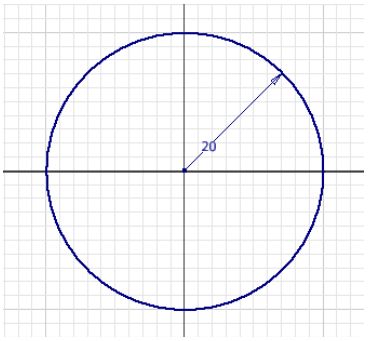

Figure 2-19 *Circle drawn using the center point and radius*

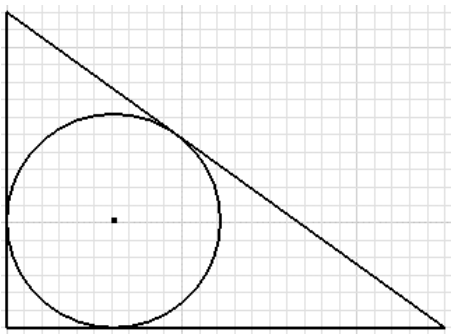

Figure 2-20 *Circle drawn using three tangent lines*

Drawing Ellipses

Ribbon: Sketch > Create > Circle drop-down > Ellipse



To draw an ellipse, choose the **Ellipse** tool from the **Create** panel; you will be prompted to specify the center of the ellipse. Select a point to specify the center of the ellipse; you will be prompted to specify the first axis point. Specify a point

Evaluation Copy. Do not reproduce. For information visit www.cadcim.com

to define the first axis of the ellipse; you will be prompted to select a point on the ellipse. Select a point on the ellipse; the ellipse will be created. You can also specify these points using the **Inventor Precise Input** toolbar. However, remember that you cannot use the relative options for defining the points of the ellipse. Therefore, if you use the **Inventor Precise Input** toolbar for drawing the ellipse, all the values will be specified from the origin. Figure 2-21 shows an ellipse drawn in the Sketching environment.

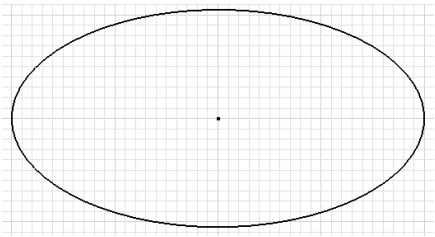

Figure 2-21 *An ellipse drawn in the Sketching environment*

Drawing Arcs

Autodesk Inventor provides three methods for drawing arcs. These methods are discussed next.

Drawing an Arc by Specifying Three Points

Ribbon: Sketch > Create > Arc drop-down > Arc Three Point

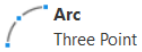

This is the default method of drawing arcs. To create an arc with three points, choose the **Arc Three Point** tool from the **Create** panel, see Figure 2-22, and then specify three points. The first point is the start point of the arc, the second point is the endpoint of the arc, and the third point is a point on the arc. You can define these points by specifying them in the graphics window or by using the **Inventor Precise Input** toolbar. You can also use the Pointer Input for specifying the second and the third point of the arc. Figure 2-23 shows an arc drawn using this method.

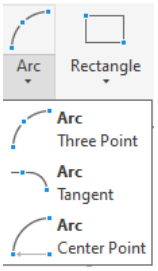

Figure 2-22 *Tools in the* ***Arc*** *drop-down*

Drawing an Arc Tangent to an Existing Entity

Ribbon: Sketch > Create > Arc drop-down > Arc Tangent



This method is used to draw an arc that is tangent to an existing open entity. The open entity can be an arc or a line. To draw an arc using this method, choose the **Arc Tangent** tool (see Figure 2-22) from the **Create** panel; you will be prompted to select the start point of the arc. The start point of the arc must be the start point or endpoint of an existing open entity. Once you specify the start point, a rubber-band arc will start from it. Note that this arc is tangent to the selected entity. Now, you will be prompted to specify the endpoint of the arc. Click on the graphics window to specify the endpoint of the arc. Alternatively, enter the radius and the angle values in the Pointer Input to specify the endpoint of the arc. Here, it is very important to mention that the **Inventor Precise Input** toolbar or the Pointer Input cannot be used to select the start point of this arc. However, you can use this toolbar to specify the endpoint of this arc. Figure 2-24 shows an arc drawn tangent to the line.

Evaluation Copy. Do not reproduce. For information visit www.cadcim.com

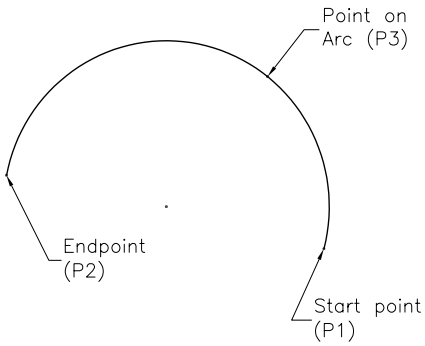

Figure 2-23 *Drawing the three points arc*

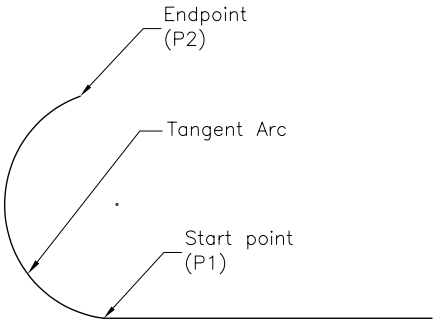

Figure 2-24 *Drawing the tangent arc*

Drawing a Tangent/Normal Arcs by Using the Line Tool

You can also draw a tangent or a normal arc when the **Line** tool is activated. At least a line or an arc should be drawn before drawing an arc using this method. To do so, draw a line or an arc and then invoke the **Line** tool; you are prompted to select the start point of the line. Move the cursor close to the point from where you want to start the tangent or normal arc, the yellow circle in the cursor turns green. Select the point at this stage; the green circle in the cursor turns gray. Press the left mouse button and drag the mouse; four construction lines appear at the start point displaying the normal and tangent directions. If you drag along the tangent direction, a tangent arc is drawn. But if you drag along the normal direction, an arc normal to the selected entity is drawn.

Drawing an Arc by Specifying the Center, Start, and End Points

Ribbon: Sketch > Create > Arc drop-down > Arc Center Point

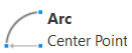

This method is used to draw an arc by specifying the center point, start point, and endpoint of the arc. To draw an arc using this method, choose the **Arc Center Point** tool from the **Create** panel (see Figure 2-22). On doing so, you will be prompted to specify the center point of the arc. Once you specify the center point of the arc, you will be prompted to specify the start point and then the endpoint of the arc, refer to Figure 2-25. You can also specify the start point and endpoint of the arc by using the Pointer Input. In case of start point, you need to specify the radius and angle of the arc from the center point. Whereas, in case of endpoint, you need to specify the arc length in terms of angle value. You can use the Tab key to toggle between the input values of the Pointer Input. As you define the center point and the start point, the radius of the arc will be defined automatically. So, the third point is just used to define the arc length. An imaginary line is drawn from the cursor to the center of the arc. The point at which the arc intersects the imaginary line will then be taken as the endpoint of the arc, see Figure 2-26. You can also use the **Inventor Precise Input** toolbar to specify these three points of the arc.

Evaluation Copy. Do not reproduce. For information visit www.cadcim.com

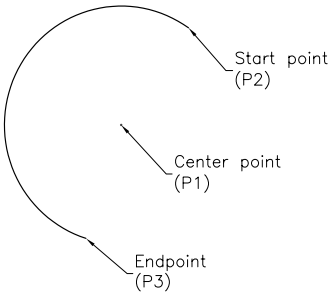

Figure 2-25 *The arc created by specifying the center, start, and end points*

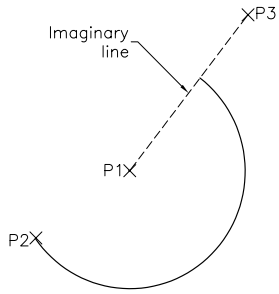

Figure 2-26 *The imaginary line created while drawing the center point arc*

Drawing Rectangles

In Autodesk Inventor, rectangles can be drawn by using various methods that are discussed next.

Drawing a Rectangle by Specifying Two Opposite Corners

Ribbon: Sketch > Create > Rectangle/Slot drop-down > Rectangle Two Point

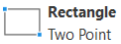

This is the default method used to draw a rectangle by specifying its two opposite corners. To draw a rectangle by using this method, choose the **Rectangle Two Point** tool from the **Create** panel, see Figure 2-27; you will be prompted to specify the first corner of the rectangle and the Pointer Input will be displayed. Click at the required location to specify the first corner of the rectangle. Once you specify the first corner, you will be prompted to specify the opposite corner of the rectangle and the Pointer Input will be modified. Click to specify the second corner or enter the length and height of the rectangle in the Pointer Input. Figure 2-28 shows a rectangle drawn using the **Rectangle Two Point** tool.

Drawing a Rectangle by Specifying Three Points on a Rectangle

Ribbon: Sketch > Create > Rectangle/Slot drop-down > Rectangle Three Point



You can draw a rectangle by specifying its three points. In this method, the first two points are used to define the length and angle of one of the sides of the rectangle and the third point is used to define the length of the other side. To create a rectangle by using this method, choose the **Rectangle Three Point** tool from the **Rectangle/Slot** drop-down of the

Evaluation Copy. Do not reproduce. For information visit www.cadcim.com

Create panel of the **Sketch** tab, see Figure 2-27; you will be prompted to specify the first corner of the rectangle. Once you specify it, you will be prompted to specify the second corner of the rectangle. Both these corners are along the same direction. As a result, you can use these points to define the length of one side of the rectangle. After specifying the second corner, you will be prompted to specify the third corner. This corner is used to define the length of the other side of the rectangle. Note that if you specify the second corner at a certain angle, then the resultant rectangle will also be inclined. You can also specify the first, second, and third points of the rectangle by using the Pointer Input. In case of second point, you need to specify the length and angle of rectangle in the input value fields of the Pointer Input. Whereas, in case of endpoint, you need to specify the height of the rectangle. You can use the Tab key to toggle between the input values of the Pointer Input. You can also specify the three points for drawing the rectangle using the **Inventor Precise Input** toolbar. Figure 2-29 shows an inclined rectangle drawn by using the **Three Point Rectangle** tool.

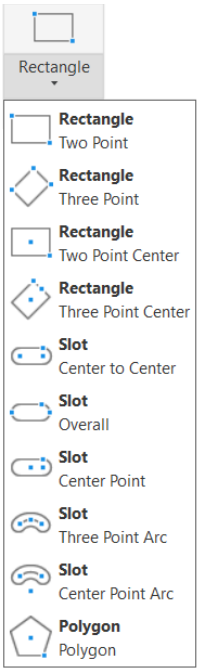

Figure 2-27 *Tools in the* ***Rectangle/Slot*** *drop-down*

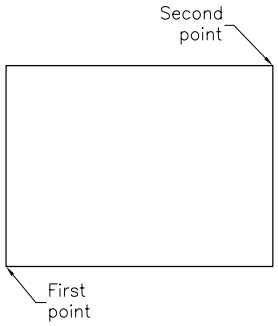

Figure 2-28 *Drawing a rectangle using two points*

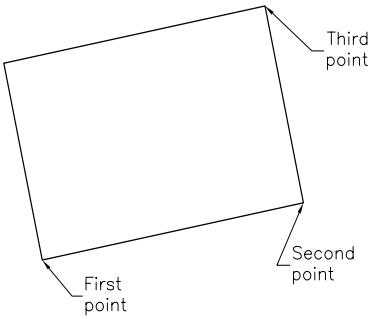

Figure 2-29 *A rectangle drawn using the* ***Three Point*** *tool*

Drawing a Rectangle by Specifying its Two Points

Ribbon: Sketch > Create > Rectangle/Slot drop-down > Rectangle Two Point Center

Rectangle Two Point Center

You can also draw a rectangle by specifying its two points. In this method, the first point is used to define the center of the rectangle and the second point is used to define the length and width of the rectangle. To create a rectangle by using this method, choose the **Rectangle Two Point Center** tool from the **Rectangle/Slot** drop-down of the **Create** panel in the **Sketch** tab, refer to Figure 2-27; you will be prompted to specify the center of the

Evaluation Copy. Do not reproduce. For information visit www.cadcim.com

rectangle. Click in the graphics window to specify it and move the cursor toward left or right; the Pointer Input will be displayed. Enter the length and width of the rectangle in the Pointer Input. Figure 2-30 shows a rectangle drawn using the **Rectangle Two Point Center** tool.

Drawing a Rectangle by Specifying Three Different Points on a Rectangle

Ribbon: Sketch > Create > Rectangle/Slot drop-down > Rectangle Three Point Center



You can also draw a rectangle by specifying its three points. In this method, the first point is used to define the center of the rectangle, the second point is used to define the length and orientation of the rectangle, and the third point is used to define the width of the rectangle. To create a rectangle by this method, choose the **Rectangle Three Point Center** tool from the **Rectangle/Slot** drop-down in the **Create** panel of the **Sketch** tab, refer to Figure 2-27; you will be prompted to specify the center of the rectangle. Click at the required location to specify the center; Pointer Input will be displayed. Now, move the cursor and click to specify the first corner point and orientation of the rectangle. Again, move the cursor to specify the second corner point of the rectangle. Figure 2-31 shows a rectangle drawn using the **Rectangle Three Point Center** tool.

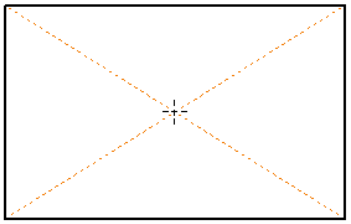

Figure 2-30 *Drawing a rectangle by using the* ***Rectangle Two Point Center*** *tool*

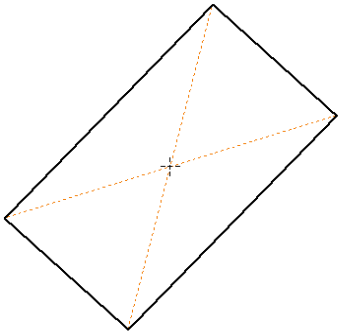

Figure 2-31 *Drawing a rectangle by using the* ***Rectangle Three Point Center*** *tool*

Drawing Polygons

Ribbon: Sketch > Create > Rectangle/Slot drop-down > Polygon



The polygons drawn in Autodesk Inventor are regular polygons. A regular polygon is a multi-sided geometric figure in which the length of all sides and the angle between them are same. In Autodesk Inventor, you can draw a polygon with the number of sides ranging from 3 to 120. When you invoke the **Polygon** tool, the **Polygon** dialog box will be displayed, as shown in Figure 2-32, and you will be prompted to select the center of the polygon. The options in this dialog box are discussed next.

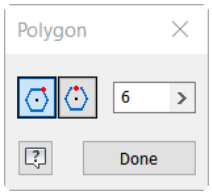

Figure 2-32 *The* ***Polygon*** *dialog box*

Evaluation Copy. Do not reproduce. For information visit www.cadcim.com

Inscribed

This is the first button in the **Polygon** dialog box and is chosen by default. This option is used to draw an inscribed polygon. An inscribed polygon is the one that is drawn inside an imaginary circle such that its vertices touch the circle. Once you have specified the polygon center, you will be prompted to specify a point on the polygon. In case of an inscribed polygon, the point on the polygon specifies one of its vertices, see Figure 2-33.

Circumscribed

This is the second button in the **Polygon** dialog box and is used to draw a circumscribed polygon. A circumscribed polygon is the one that is drawn outside an imaginary circle such that its edges are tangent to the imaginary circle. In case of a circumscribed polygon, the point on the polygon is the midpoint of one of the polygon edges, see Figure 2-34.

Number of Sides

This edit box is used to specify the number of sides of the polygon. The default value is 6. You can enter any value ranging from 3 to 120 in this edit box.

Note

The rectangles and polygons are a combination of individual lines. All the lines can be separately selected or deleted. However, when you select one of the lines and drag, the entire rectangle or polygon will be considered as a single entity. As a result, the entire object will be moved or stretched.

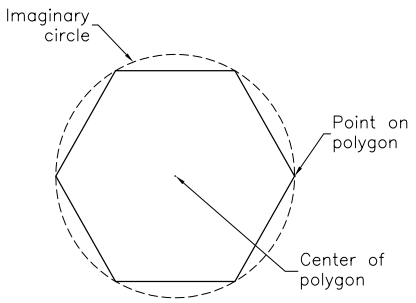

Figure 2-33 *Drawing a six-sided inscribed polygon*

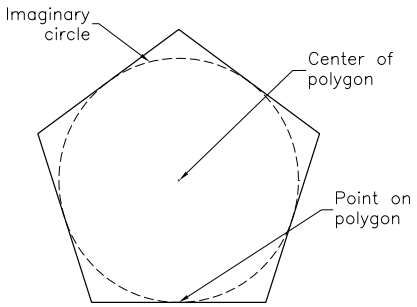

Figure 2-34 *Drawing a five-sided circumscribed polygon*

Drawing Slots

In Autodesk Inventor, you can draw linear or arched slots by using the Slot tools available in the **Rectangle/Slot** drop-down of the **Create** panel in the **Ribbon**, refer to Figure 2-35. The methods of drawing slots are discussed next.

Drawing a Center to Center Slot

Ribbon: Sketch > Create > Rectangle/Slot drop-down > Slot Center to Center

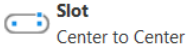

To create a Center to Center slot, choose the **Slot Center to Center** tool from the **Rectangle/Slot drop-down**; you will be prompted to specify the start center point. Click in the graphics window to specify the start center point, you will

Evaluation Copy. Do not reproduce. For information visit www.cadcim.com

be prompted to specify the end center point. Now, you can specify the end point by specifying distance in dynamic input or by clicking in the graphics window. Specify the end center point; you will be prompted to specify the point on the slot to specify the diameter or width of the slot. Specify the width or diameter in the dynamic input; the slot will be created. This type of slot is called the center to center linear slot. Figure 2-36 shows a Center to Center slot created.

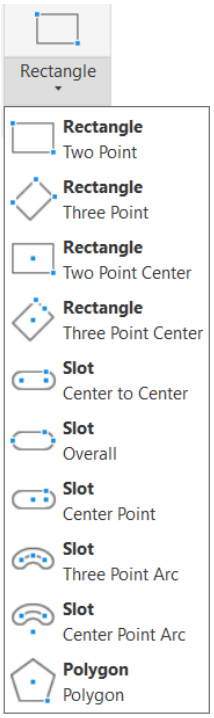

Figure 2-35 *The* ***Rectangle/Slot*** *drop-down*

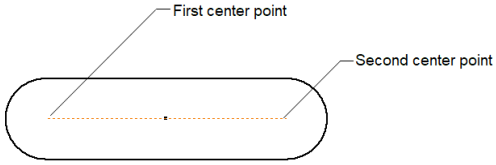

Figure 2-36 *Center to Center slot*

Drawing an Overall Slot

Ribbon: Sketch > Create > Rectangle/Slot drop-down > Slot Overall

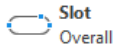

To create an Overall slot, choose the **Slot Overall** tool from the **Rectangle/Slot** drop-down; you will be prompted to specify the start point. Click in the graphics window to specify the start point; you will be prompted to specify the end point. Now, you can specify the end point by specifying the distance in dynamic input or clicking in the graphics window. Specify the end point; you will be prompted to specify the point on the slot to specify the diameter or width of the slot. Specify the width or diameter in the dynamic input; the slot will be created. This type of slot is also called the linear slot. Figure 2-37 shows an Overall slot created.

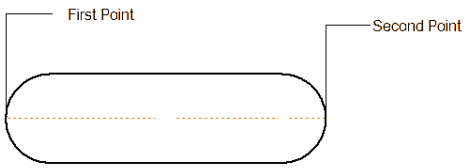

Figure 2-37 *Overall slot*

Evaluation Copy. Do not reproduce. For information visit www.cadcim.com

Drawing a Center Point Slot

Ribbon: Sketch > Create > Rectangle/Slot drop-down > Slot Center Point

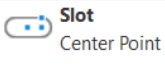

To create a Center Point slot, choose the **Slot Center Point** tool from the **Rectangle/Slot** drop-down; you will be prompted to specify the center point of the slot. Click in the graphics window to specify the center point of the slot; you will be prompted to specify the second point. You can specify the distance of the second point either by using the dynamic input or clicking in the graphics window. Specify the second point; you will be prompted to specify the point on the slot to specify the diameter or width of the slot. Specify the width or diameter in the dynamic input; the slot will be created. This type of slot is also called a linear slot. Figure 2-38 shows a Center Point slot created.

Drawing a Three Point Arc Slot

Ribbon: Sketch > Create > Rectangle/Slot drop-down > Slot Three Point Arc

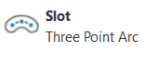

To create a Three Point Arc slot, choose the **Slot Three Point Arc** tool from the **Rectangle/Slot** drop-down; you will be prompted to specify the start point of the center arc. Click in the graphics window to specify the start point of center arc; you will be prompted to specify the end point. Now you can specify the end point either by specifying length in the dynamic input or by clicking in the graphics window; you will be prompted to specify the third point of the center arc. Specify the third point; you will be prompted to specify the diameter or width of the slot. Specify the width or diameter in the dynamic input; the slot will be created. This type of slot is called an arc slot. Figure 2-39 shows a Three Point Arc slot created.

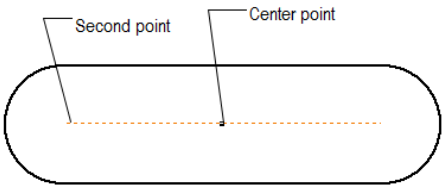

Figure 2-38 *Center Point slot created*

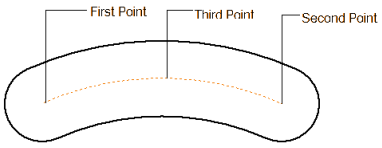

Figure 2-39 *Three Point Arc slot created*

Drawing a Center Point Arc Slot

Ribbon: Sketch > Create > Rectangle/Slot drop-down > Slot Center Point Arc

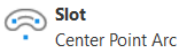

To create a Center Point Arc slot, choose the **Slot Center Point Arc** tool from the **Rectangle/Slot** drop-down; you will be prompted to specify the center of the Center Point Arc. Specify the center; you will be prompted to specify the start point of the arc. Specify the start point by entering angle value in the dynamic input; you will be prompted to specify the end point. Specify the end point by entering angle value in the dynamic input; you will be prompted to specify the diameter or width of the slot. Specify the width or diameter in the dynamic prompt; the slot will be created. This type of slot is also called an arc slot. Figure 2-40 shows a Center Point Arc slot created.

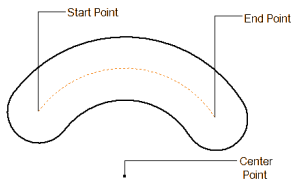

Figure 2-40 *Center Point Arc slot created*

Evaluation Copy. Do not reproduce. For information visit www.cadcim.com

Placing Points

Ribbon: Sketch > Create > Point



In Autodesk Inventor, you can place the sketched points in a sketch by using the **Point** tool. To place a point, choose the **Point** tool from the **Create** panel of the **Sketch** tab; you will be prompted to select the center point. Specify the center point; a point will be placed. You can specify the location of a point in the sketch by picking a point from the graphics window or by entering the value in the **Inventor Precise Input** toolbar.

Creating Fillets

Ribbon: Sketch > Create > Fillet/Chamfer drop-down > Fillet



Filleting is defined as the process of rounding the sharp corners of a sketch. This is done to reduce the stress concentration in the model and for smooth handling. Using the **Fillet** tool, you can round the corners of the sketch by creating an arc tangent to both the selected entities. The portions of the selected entities that comprise the sharp corners are trimmed when the fillet is created. When you invoke this tool from the **Fillet/Chamfer** drop-down, refer to Figure 2-41, the **2D Fillet** dialog box will be displayed with default fillet radius, as shown in Figure 2-42, and you will be prompted to select the lines or the arcs to be filleted. If you have already created some fillets, their radius values will be stored as preset values. You can select these preset values from the list that is displayed when you choose the arrow provided on the right of the edit box.

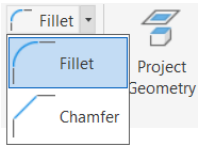

Figure 2-41 *Tools in the* ***Fillet/Chamfer*** *drop-down*

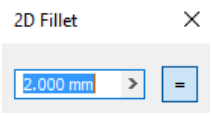

Figure 2-42 *The* ***2D Fillet*** *dialog box*

You can create any number of fillets of similar or dissimilar radii. If the **Equal** button in the **2D Fillet** dialog box is chosen, the dimension of the fillet will be placed only on the first fillet and not on the other fillets created by using the same sequence, see Figure 2-43. On modifying the dimension of the first fillet, all instances of fillet will get modified by default. To create fillets of independent radii values, deselect the **Equal** button before creating fillets. The fillets thus created will show individual dimensions, see Figure 2-44. As a result, you can modify the dimension of one fillet without affecting the other. You can fillet two parallel or perpendicular lines, intersecting lines or arcs, non-intersecting lines or arcs, and a line and an arc.

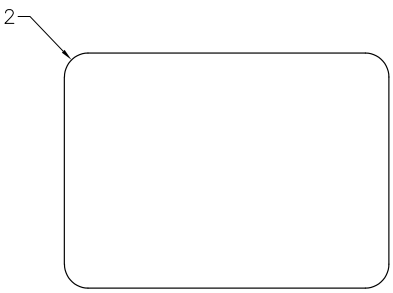

Figure 2-43 *Rectangle filleted using the same radius with the* ***Equal*** *button chosen*

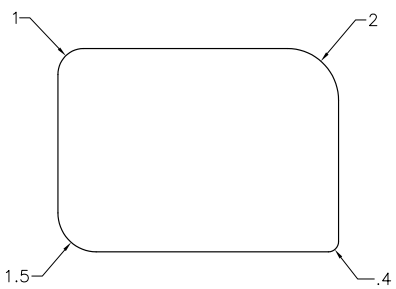

Figure 2-44 *Rectangle filleted using different radii with the* ***Equal*** *button deactivated*

Evaluation Copy. Do not reproduce. For information visit www.cadcim.com

Creating Chamfers

Ribbon: Sketch > Create > Fillet/Chamfer drop-down > Chamfer



Chamfering is defined as the process of beveling the sharp corners of a sketch. This is the second method of reducing stress concentration. To chamfer sketched entities, choose the **Chamfer** tool from the **Create** panel (see Figure 2-41); the **2D Chamfer** dialog box will be displayed, as shown in Figure 2-45. Also, you will be prompted to select the lines to be chamfered. Select the lines; the chamfer will be created. The options in the **2D Chamfer** dialog box are discussed next.

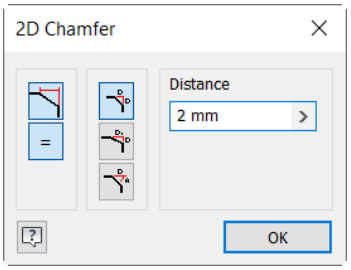

Figure 2-45 *The* ***2D Chamfer*** *dialog box*

Create Dimensions



The **Create Dimensions** button is chosen to show the dimensions of the chamfer on the sketch. When you chamfer two lines, the dimensions of the chamfer are shown in the sketch. If you choose this button again, the chamfer dimensions will not be displayed in the sketch when you create another chamfer.

Equal to Parameters



The **Equal to parameters** button is chosen to create multiple chamfers with the same parameters. This button is active only when the **Create Dimensions** button is chosen.

Equal Distance



The **Equal Distance** button is chosen to create an equal distance chamfer. The distance of the vertex along the two selected edges is the same. As a result, a 45-degree chamfer is created using this method. The distance value is specified in the **Distance** edit box. If the **Create Dimension** button is chosen, two dimensions of the same value will be shown in the sketch, as shown in Figure 2-46.

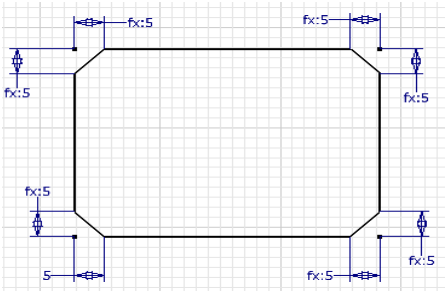

Figure 2-46 *Chamfer with dimension values*

Unequal Distance



The **Unequal Distance** button is chosen to create a chamfer with two different distances. The distance values are specified in the **Distance1** and **Distance2** edit boxes. The distance value specified in the **Distance1** edit box is measured along the edge selected first. Similarly, the value in the **Distance2** edit box is measured along the edge selected next. Figure 2-47 shows a chamfer created by using the **Unequal Distance** button.

Distance and Angle



The **Distance and Angle** button is chosen to create a chamfer by specifying a distance and an angle. On choosing this button, the distance needs to be specified in the **Distance** edit box and the angle in the **Angle** edit box. The specified angle is measured from the first edge selected to chamfer, see Figure 2-48.

Evaluation Copy. Do not reproduce. For information visit www.cadcim.com

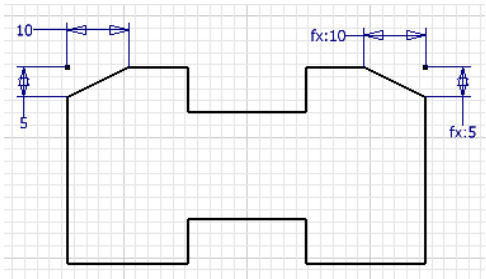

Figure 2-47 *The chamfer created using the* ***Unequal Distance*** *button*

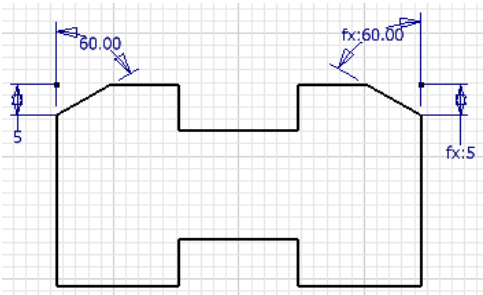

Figure 2-48 *The chamfer created using the* ***Distance and Angle*** *button*

Tip

1. If multiple chamfers of same values are created, the dimension value is displayed only at the first instance. For the remaining chamfers, the dimension will be displayed as the function of the original value.

2. You can also select a vertex to create a fillet or chamfer. The two entities forming the selected vertex will be filleted or chamfered using the current parameters.

Drawing Splines

Autodesk Inventor provides various methods for drawing splines. These methods are discussed next.

Drawing a Spline by Using the Spline Interpolation Tool

Ribbon: Sketch > Create > Line/Spline drop-down > Spline Interpolation

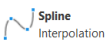

To draw a spline, choose the **Spline Interpolation** tool from the **Line/Spline** drop-down of the **Create** panel, refer to Figure 2-49; you will be prompted to specify the first point of the spline. Specify the first point; you will be prompted to specify the next point of the spline. This process will continue until you terminate the spline creation. To end the spline at the current point, double-click in the drawing window or right-click to display the Marking menu and choose **Create**. Note that if you choose **Cancel(Esc)** from the Marking menu, the spline will not be drawn. You can also end the spline creation by pressing the Enter key. Note that after creating a spline, the square and diamond points will be displayed on the spline along with the tangent handles, as shown in Figure 2-50. You can drag these square and diamond points to modify the shape of the spline. To exit the command, press the Esc key or choose **Cancel(Esc)** from the Marking menu.

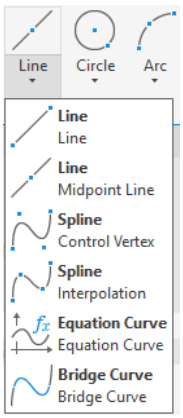

Figure 2-49 *Tools in the* ***Line/Spline*** *drop-down*

You can undo the last drawn spline segment while drawing a spline. This can be done by choosing the **Back** option from the Marking

Evaluation Copy. Do not reproduce. For information visit www.cadcim.com

menu which is displayed when you right-click anywhere in the graphics window. You can also draw a spline tangent to an existing entity. To draw the tangent spline, select the point where the spline should be tangent. Next, hold the left mouse button and drag it; a construction line will be drawn, displaying the possible tangent directions for the spline. Drag the mouse in the required direction to draw the tangent spline and release the left mouse button. Figure 2-51 shows a spline drawn tangent to an existing line.

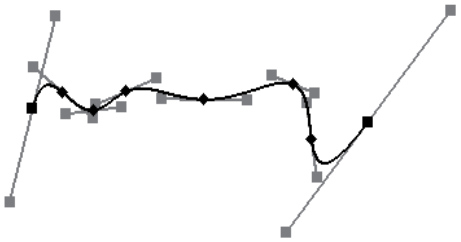

Figure 2-50 *A spline drawn by specifying different points*

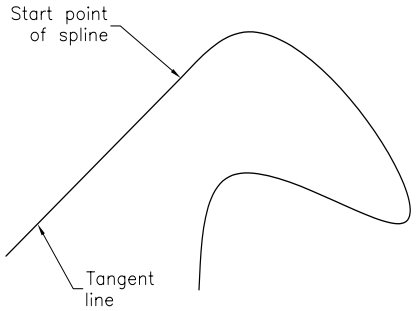

Figure 2-51 *A spline drawn tangent to a line*

Tip

Autodesk Inventor allows you to invoke the last used tool by choosing the ***Repeat (name of the last used tool)*** *option from the Marking menu displayed on right-clicking anywhere in the graphics window. For example, the* ***Repeat Line*** *option will be available in the Marking menu, if the line tool was the last used tool. Alternatively, you can press the Spacebar key to invoke the last used tool.*

Drawing a Spline by Specifying Control Vertices

Ribbon: Sketch > Create > Line/Spline drop-down > Spline Control Vertex

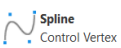

To draw a spline, choose the **Spline Control Vertex** tool from the **Line/Spline** drop-down in the **Create** panel, see Figure 2-52; you will be prompted to specify the first point of the spline. Specify the start point; you will be prompted to specify the next point of the spline. This process will continue until you terminate the spline creation. To end the spline at the current point, double-click in the drawing window or right-click to display the Marking menu and choose **Create**. Note that if you choose **Cancel (Esc)** from the Marking menu, the spline will not be drawn. You can also end the spline creation by pressing the Enter key. Note that after creating a spline, the control vertices will be displayed on the spline along with the tangent handles, as shown in Figure 2-53. You can drag these control vertices to modify the shape of the spline. These control vertices act as poles for controlling the shape of the splines. Figure 2-54 shows a spline drawn tangent to a line. To exit the command, press the Esc key on the keyboard or choose **OK** from the Marking menu.

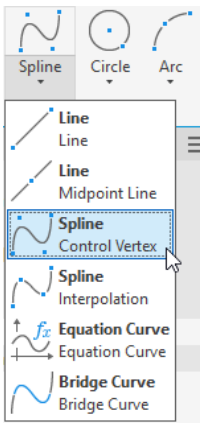

Figure 2-52 The Spline Control Vertex *tool to be chosen in the* ***Line/Spline*** *drop-down*

Evaluation Copy. Do not reproduce. For information visit www.cadcim.com

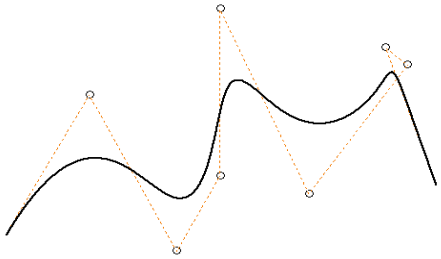

Figure 2-53 A spline drawn by specifying different control vertices

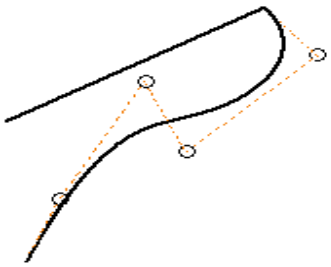

Figure 2-54 A spline drawn tangent to a line

Creating a Smooth Curve between the Two Existing Curves

Ribbon: Sketch > Create > Line/Spline drop-down > Bridge Curve

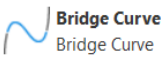

In Autodesk Inventor, you can create a smooth (G2) continuous curve between two existing curves. The existing curves can be arcs, lines, splines, or projected curves. To create a smooth curve, choose the **Bridge Curve** tool from the **Line/Spline** drop-down in the **Create** panel of the **Sketch** tab, refer to Figure 2-52; you will be prompted to select the curves one after the other. Select the two curves; a smooth G2 continuous curve, known as bridge curve, will be created between the selected curves. The profile of the bridge curve depends on the position of the points selected on the existing curves. Figure 2-55 shows two points selected on the two curves and the resulting bridge curve. Figure 2-56 shows two different points selected on the curves shown in Figure 2-55 and the resulting bridge curve.

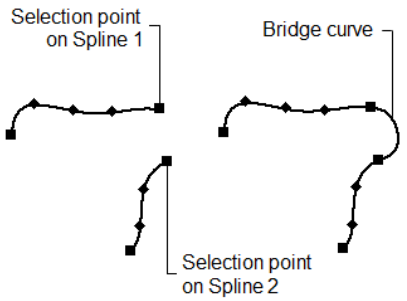

Figure 2-55 Bridge curve created between two points selected on two curves

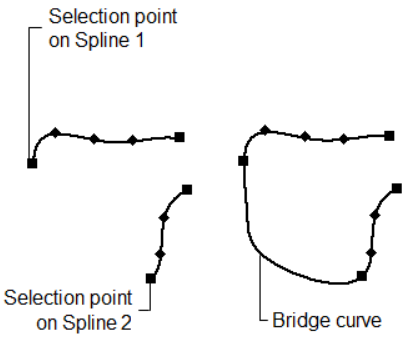

Figure 2-56 Bridge curve created between two different points on the curves shown in Figure 2-55

DELETING SKETCHED ENTITIES

To delete a sketched entity, first ensure that no drawing tool is active. If any of them is active, press the Esc key for deactivating. Now, select the entity you want to delete using the left mouse button and then right-click to display the Marking menu. Choose the **Delete** option from this Marking menu. You can also press the Delete key to delete the selected entities. To delete more than one entity, you can use a window or a crossing as discussed next.

Evaluation Copy. Do not reproduce. For information visit www.cadcim.com

Deleting Entities by Using a Window

A window is defined as a box created by pressing and holding the left mouse button and dragging the cursor from left to right in the drawing window. The window has a property that all the entities that lie completely inside the window will be selected. The box defined by the window consists of continuous lines. All the selected entities will be displayed in cyan color. After selecting the entities, right-click and choose **Delete** from the Marking menu or press the Delete key to delete all the selected entities.

Deleting Entities by Using a Crossing

A crossing is defined as a box created by pressing and holding down the left mouse button and dragging the cursor from right to left in the drawing window. The crossing has a property that all entities that lie completely or partially inside the crossing or the entities that touch the crossing will be selected. The box defined by the crossing consists of dashed lines. Once the entities are selected, right-click and choose **Delete** from the Marking menu.



Tip

You can add or remove an entity from the selection set by pressing the SHIFT or the Ctrl key and then selecting the entity by using the left mouse button. If the entity is already in the current selection set, it will be removed from the selection set. If not, it will be added to the set.

FINISHING A SKETCH

After creating the required sketch, you need to save it. But before you save the sketch, you need to finish the sketch and exit the Sketching environment. To do so, choose the **Finish Sketch** tool from the **Exit** panel of the **Sketch** tab; the sketch will be finished and you will switch to the **Home** view. You can also exit the Sketching environment by choosing the **Finish 2D Sketch** option from the Marking menu. The Home view enables you to change the orientation of current view to isometric views. After exiting the Sketching environment, you can easily save the document.

UNDERSTANDING THE DRAWING DISPLAY TOOLS

The drawing display tools or navigation tools are an integral part of any design software. These tools are extensively used during the design process. These tools are available in the **Navigation Bar** located on the right in the graphics window and in the **Navigate** panel of the **View** tab. Some of the drawing display tools in Autodesk Inventor are discussed next. The rest of these tools will be discussed in the later chapters.

Zoom All

Ribbon: View > Navigate > Zoom drop-down > Zoom All
Navigation Bar: Zoom flyout > Zoom All



The **Zoom All** tool is used to increase the drawing display area to display all the sketched entities in the current display.

Evaluation Copy. Do not reproduce. For information visit www.cadcim.com

Zoom

Ribbon: View > Navigate > Zoom drop-down > Zoom
Navigation Bar: Zoom flyout > Zoom



The **Zoom** tool is used to interactively zoom in and out of the drawing view. When you choose this tool, the default cursor is replaced by a zoom cursor. You can zoom in the drawing by pressing the left mouse button and dragging the cursor down. Similarly, you can zoom out the drawing by pressing the left mouse button and then dragging the cursor up. You can exit this tool by choosing another tool or by pressing Esc. You can also choose **Done [Esc]** from the Marking menu which is displayed on right-clicking. You can also zoom in the drawing by rolling the scroll wheel of the mouse in the downward direction. Similarly, you can zoom out the drawing by rolling the scroll wheel in the upward direction.

Zoom Window

Ribbon: View > Navigate > Zoom drop-down > Zoom Window
Navigation Bar: Zoom flyout > Zoom Window



The **Zoom Window** tool is used to define an area to be magnified and viewed in the current drawing. The area is defined using two diagonal points of a box in the drawing window. The area inscribed in the window will be magnified and displayed on the screen.



Tip

1. The size of the dimension text always remains constant even if you magnify the area that includes some dimensions.

*2. To switch to the previous view, right-click in the drawing window and then choose **Previous View** from the shortcut menu or press the **F5** key. You can restore nine previous views in the current sketching environment by using this option.*

Zoom Selected

Ribbon: View > Navigate > Zoom drop-down > Zoom Selected
Navigation Bar: Zoom flyout > Zoom Selected



When you choose the **Zoom Selected** tool, you will be prompted to select an entity to zoom. Select an entity from the drawing area; it will be magnified to the maximum extent and will be placed at the center of the drawing window. This tool can also be invoked by pressing the End key.

Pan

Ribbon: View > Navigate > Pan
Navigation Bar: Pan



The **Pan** tool is used to drag the current view in the drawing window. This option is generally used to display the contents of the drawing that are outside the display area

Evaluation Copy. Do not reproduce. For information visit www.cadcim.com

without actually changing the magnification of the current drawing. It is similar to holding the drawing and dragging it across the drawing window. You can also invoke the **Pan** tool by pressing and holding the middle scroll wheel of the mouse.

Orbit

Ribbon:	View > Navigate > Orbit drop-down > Orbit
Navigation Bar:	Orbit flyout > Orbit

The **Orbit** tool is used to rotate a model freely about any axis. It is useful when you want to rotate a model to any position. It is a transparent tool as it can be invoked inside any other command. You can invoke this tool by choosing the **Orbit** tool from the **Navigate** panel in the **View** tab. On doing so, an arcball will be displayed. This arcball is a circle with four small lines placed such that they divide the arcball into quadrants. The orbit axis is parallel to the screen and if you rotate an object by dragging the mouse pointer outside the arcball, the object will rotate about the orbit axis. Figure 2-57 shows the model to be rotated and Figure 2-58 shows the same model rotated about the vertical axis by using the **Orbit** tool.

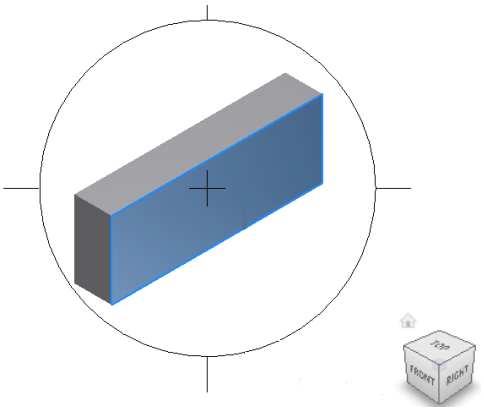

Figure 2-57 *Position 1: Default view of the model*

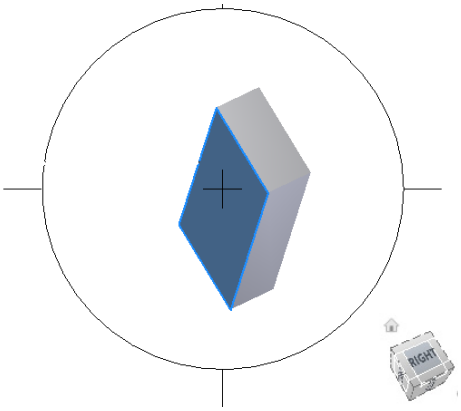

Figure 2-58 *Position 2: Model rotated about the vertical axis*

Constrained Orbit

Ribbon:	View > Navigate > Orbit drop-down > Constrained Orbit
Navigation Bar:	Orbit flyout > Constrained Orbit

The **Constrained Orbit** tool is used to visually maneuver around the 3D objects to obtain different views. This is one of the most important tool used for advanced 3D viewing. Figures 2-59 and 2-60 show the default view of the model, and the view after one complete rotation, respectively. When the **Constrained Orbit** tool is invoked, the cursor gets modified and looks like a sphere encircled by two arc-shaped arrows. This cursor is known as the Orbit mode cursor. You can click and drag the mouse to rotate the model freely. You can move the Orbit mode cursor horizontally, vertically, and diagonally. In this case, the axis is normal to the top and bottom faces of the ViewCube. This is also a transparent tool as it can be invoked inside any other tool.

Evaluation Copy. Do not reproduce. For information visit www.cadcim.com



Tip

1. Press and hold the Shift key and the middle mouse button to temporarily enter the ***Constrained Orbit*** *mode.*

2. While working with the ***Orbit*** *tool, you can adjust the viewport for better visibility and understanding by clicking inside the arcball.*

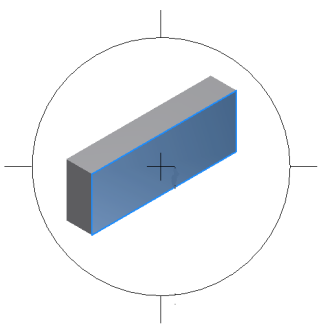

Figure 2-59 *Position 1: Default view of the model*

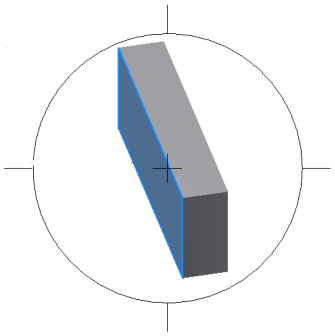

Figure 2-60 *Position 2: Model after a complete rotation*

ADDING DIMENSIONS TO SKETCHES

Ribbon: Sketch > Constrain > Dimension



After drawing a sketch and adding constraints to it, dimensioning is the next most important step in creating a design. As mentioned earlier, Autodesk Inventor is a parametric solid modeling package. The parametric property ensures that irrespective of its original size, the selected entity is driven by the specified dimension value. Therefore, whenever you modify or apply dimension to an entity, it is forced to change its size with respect to the specified dimension value. The type of dimension to be applied varies according to the type of entity selected. For example, if you select a line segment, linear dimensions will be applied and if you select a circle, diameter dimensions will be applied. Note that all these types of dimensions can be applied using the same dimensioning tool. To edit the dimension, double-click on the dimension; the **Edit Dimension** edit box will be displayed, refer to Figure 2-61. Enter the desired value in the edit box to modify the dimensions. The selected entity will be driven to the dimension value defined in this edit box. You can enter a new value for the dimension or choose the **OK** button on the right of this edit box to accept the default value.

If you do not want to edit the dimensions after they have been placed, invoke the **Dimension** tool and then right-click to display the Marking menu, refer to Figure 2-62. Clear the check mark on the left of the **Edit Dimension** option by choosing it again. When you place a dimension now, the **Edit Dimension** edit box will not be displayed. To edit the dimension value in this case, click on it after placing, if the **Dimension** tool is still active. If the tool is not active, double-click on the dimension; the **Edit Dimension** edit box will be displayed. Enter the new dimension value in this edit box. The dimensioning techniques available in Autodesk Inventor are discussed next.

Evaluation Copy. Do not reproduce. For information visit www.cadcim.com

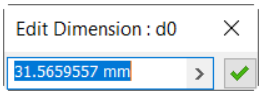

Figure 2-61 *The* ***Edit Dimension*** *edit box*

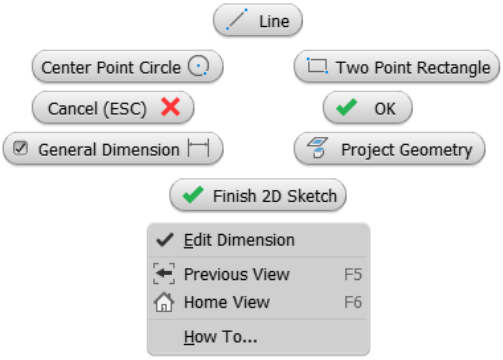

Figure 2-62 *Choosing* ***Edit Dimension*** *from the Marking menu*

Linear Dimensioning

The linear dimensions are defined as the dimensions that specify the shortest distance between two points. You can apply linear dimensions directly to a line or select two points or entities to apply the linear dimension between them. The points that you can select include the endpoints of lines, splines, or arcs, or the center points of circles, arcs, or ellipses. You can dimension a vertical or a horizontal line by directly selecting it. As soon as you select it, the dimension will be attached to the cursor. You can place the dimension at any desired location. To place the dimension between two points, select the points one by one. After selecting the second point, right-click to display the Marking menu, as shown in Figure 2-63. You can choose the dimension type from this menu as per your requirement.

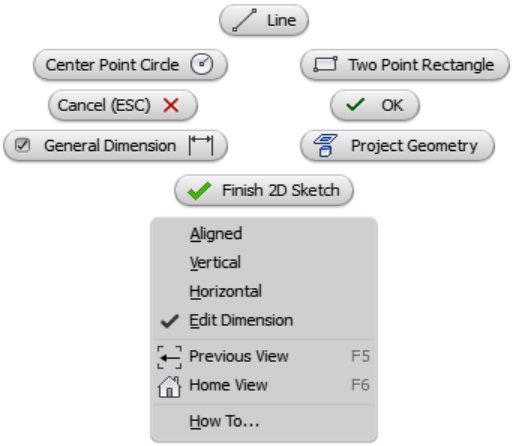

Figure 2-63 *Marking menu displaying various options to dimension two points*

If you choose **Horizontal**, the horizontal dimension will be placed between the two selected points. If you choose **Vertical**, the vertical dimension will be placed between the two selected points. If you choose **Aligned**, the aligned dimension will be placed between the two selected points. Figure 2-64 shows the linear dimensioning of lines and Figure 2-65 shows the linear dimensioning of two points.

Evaluation Copy. Do not reproduce. For information visit www.cadcim.com

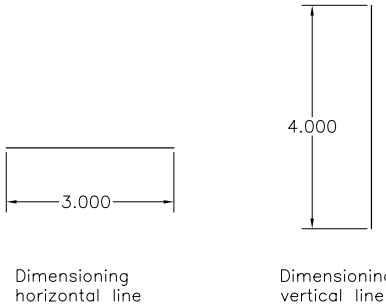

Figure 2-64 *Linear dimensioning of lines*

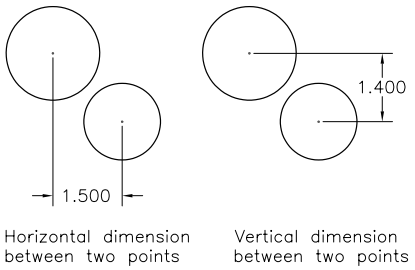

Figure 2-65 *Linear dimensioning of two points*

You can also apply a horizontal or vertical dimension to an inclined line, see Figure 2-66. To apply these dimensions, select the inclined line and then right-click; a Marking menu similar to the one shown in Figure 2-66 will be displayed. In this menu, choose **Horizontal** to place the horizontal dimension and **Vertical** to place the vertical dimension or drag the mouse in horizontal and vertical directions to place the respective dimension.

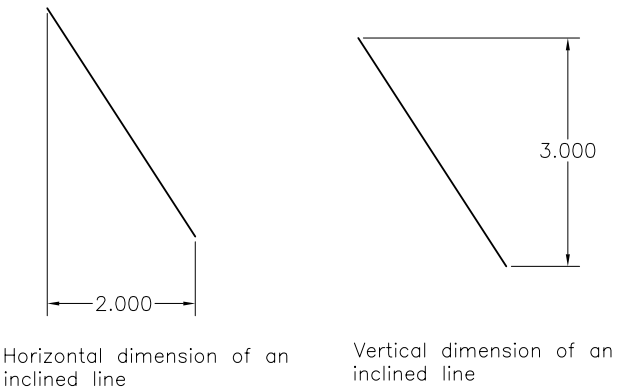

Figure 2-66 *Linear dimensioning of an inclined line*

Aligned Dimensioning

The aligned dimensions are used to dimension the lines that are not parallel to the X or Y-axis. This type of dimension measures the actual distance of the aligned lines or the lines drawn at a certain angle. To apply the aligned dimension, select the inclined line and then right-click; a Marking Menu will be displayed, refer to Figure 2-63. Choose the **Aligned** option from the Marking Menu; the aligned dimension of the selected line will be attached to the cursor. Next, click in the graphics window to specify the location of the aligned dimension. You can also apply the aligned dimension between two points. The points include the endpoints of lines, splines, or arcs or the center points of arcs, circles, or ellipses. To apply the aligned dimension between two points, invoke the **Dimension** tool. Next, select the two points and right-click; a Marking Menu will be displayed. Choose the **Aligned** option from the Marking Menu. Figures 2-67 and 2-68 show the aligned dimensions applied to various objects.

Evaluation Copy. Do not reproduce. For information visit www.cadcim.com



Tip

Alternatively, to apply the aligned dimension, choose the ***Dimension*** *tool from the* ***Ribbon*** *and then select the aligned entity to be dimensioned. Next, move the cursor away from the line and then click again on the same line. Now, click on the drawing window to place the aligned dimension.*

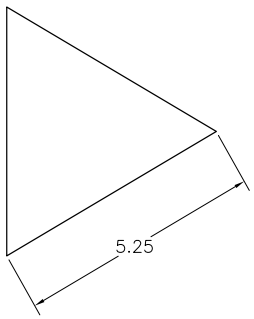

Figure 2-67 *Aligned dimension of a line*

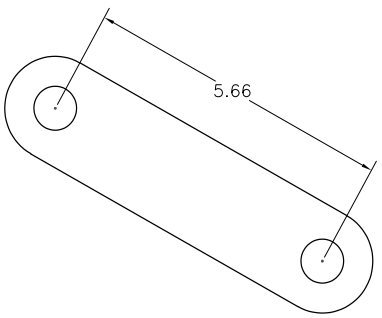

Figure 2-68 *Aligned dimension between two points*

Angular Dimensioning

The angular dimensions are used to dimension angles. You can select two line segments or use three points to apply the angular dimensions. You can also use angular dimensioning to dimension an arc. All these options of angular dimensioning are discussed next.

Angular Dimensioning Using Two Line Segments

You can directly select two line segments to apply angular dimensions. To do so, invoke the **Dimension** tool of the **Constrain** panel of the **Sketch** tab. You can also invoke the **General Dimension** tool from the Marking Menu and then select a line segment using the left mouse button. Instead of placing the dimension, select the second line segment. Next, place the dimension to measure the angle between the two lines. While placing the dimension, you need to be careful about the point where you place the dimension. This is because depending on the location of the placement of dimension with respect to the lines, the vertically opposite angles will be displayed. Figure 2-69 shows the angular dimension between two lines and Figure 2-70 shows the dimension of the vertically opposite angle between two lines. Also, depending on the location of the dimension, the major or minor angle value will be displayed. Figure 2-71 shows the major angle dimension between two lines and Figure 2-72 shows the minor angle dimension between the same set of lines.

Evaluation Copy. Do not reproduce. For information visit www.cadcim.com

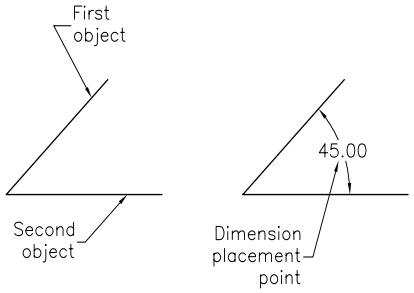

Figure 2-69 *Angular dimensioning between two lines*

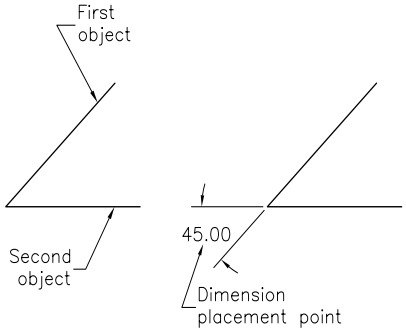

Figure 2-70 *Dimension of the vertically opposite angle between two lines*

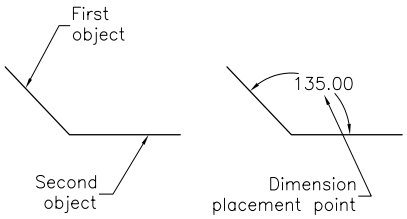

Figure 2-71 *Major angle dimension*

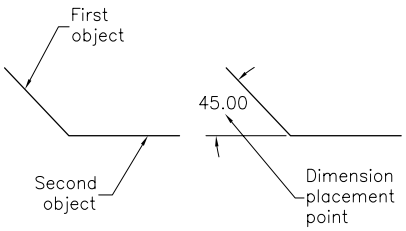

Figure 2-72 *Minor angle dimension*

Angular Dimensioning Using Three Points

You can also apply angular dimensions using three points. Remember that the three points should be selected in clockwise or counterclockwise sequence. The points that can be used to apply the angular dimensions include the endpoints of lines or arcs, or the center points of arcs, circles, and ellipses. Figure 2-73 shows angular dimensioning applied using three points.

Angular Dimensioning of an Arc

You can use angular dimensions to dimension an arc. In case of arcs, the three points are the endpoints and the center point of the arc. Note that the points should be selected in the clockwise or counterclockwise sequence, but the center point should always be the second selection point. Figure 2-74 shows the angular dimensioning of an arc. In Autodesk Inventor, you can also assign arc-length to an arc by using the Marking menu. To do so, invoke the **Dimension** tool. Then, select the arc and right-click; a Marking menu will be displayed. Choose **Dimension Type** from the Marking menu; a cascading menu will be displayed. Choose **Arc Length** from the cascading menu before placing the dimension on the graphics window, refer to Figure 2-75. Figure 2-76 shows the angular dimensioning of an arc using the Marking menu.

Evaluation Copy. Do not reproduce. For information visit www.cadcim.com

Evaluation Copy. Do not reproduce. For information visit www.cadcim.com

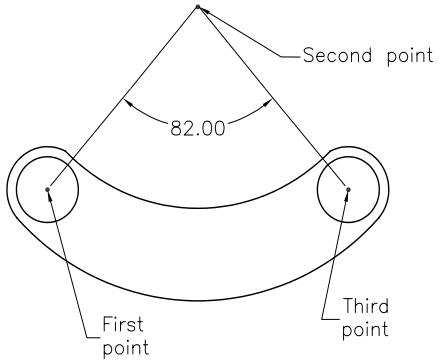

Figure 2-73 *Angular dimensioning applied using three points*

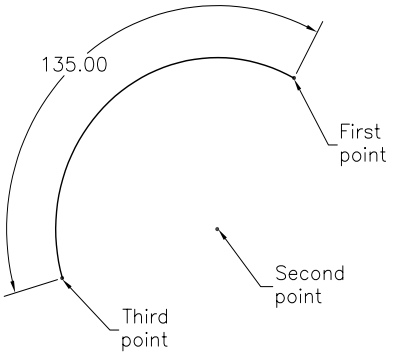

Figure 2-74 *Angular dimensioning of an arc*

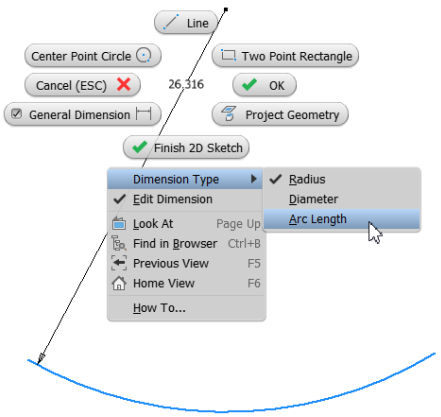

Figure 2-75 *Arc length being defined using the Marking menu*

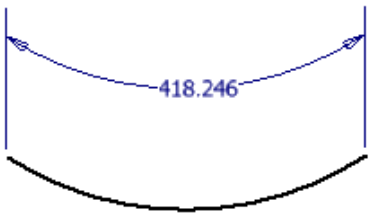

Figure 2-76 *Arc length of an arc defined using the Marking menu*

Diameter Dimensioning

Diameter dimensions are applied to dimension a circle or an arc to specify its diameter. In Autodesk Inventor, when you select a circle to dimension, the diameter dimension is applied to it by default. If you select an arc to dimension it, the radius dimension will be applied to it. You can also apply the diameter dimension to an arc. To do so, invoke the **Dimension** tool and then select the arc. Next, right-click to display the Marking menu, as shown in Figure 2-77. From the Marking menu, choose **Dimension Type**; a cascading menu is displayed. Choose **Diameter** from this menu to apply the diameter dimension. Figure 2-78 shows a circle and an arc with diameter dimensions.

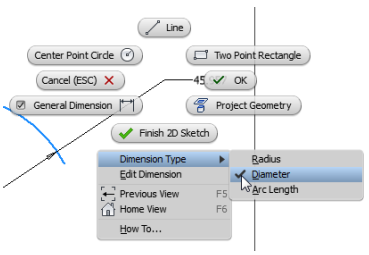

Figure 2-77 *Marking menu to apply a diameter dimension to an arc*

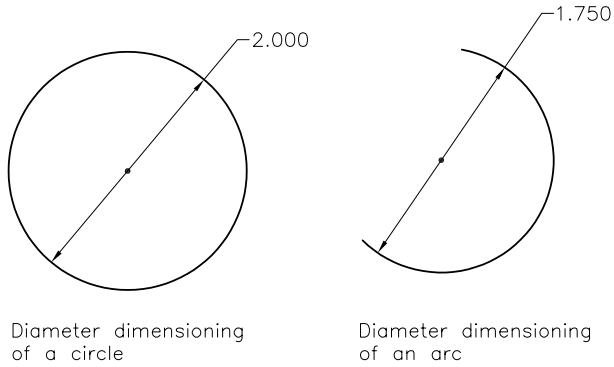

Figure 2-78 *Diameter dimensioning of a circle and an arc*

Radius Dimensioning

Radius dimensions are applied to dimension an arc or a circle to specify its radius. As mentioned earlier, by default, circles are assigned diameter dimensions and arcs are assigned radius dimensions. However, you can also apply the radius dimension to a circle. To do so, invoke the **Dimension** tool and then select the circle. Next, right-click to display the Marking menu, as shown in Figure 2-79. From the Marking menu, choose **Dimension Type**; a cascading menu is displayed. Choose **Radius** from this menu to apply the radius dimension. Figure 2-80 shows an arc and a circle with radius dimensions.

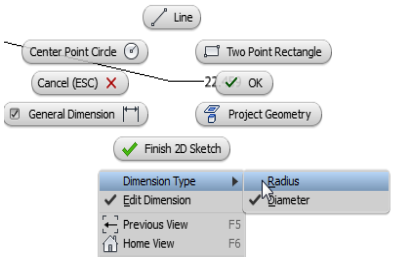

Figure 2-79 *Marking menu to apply a radius dimension to an arc*

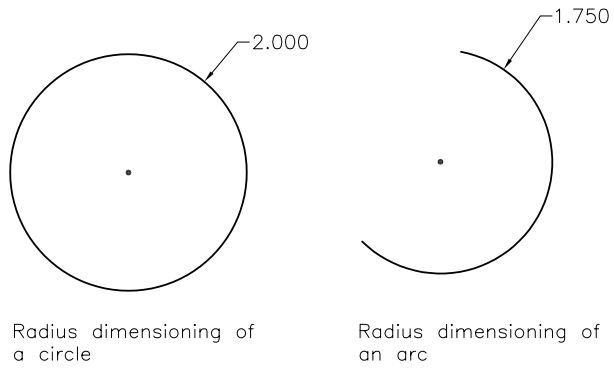

Figure 2-80 *Radius dimensioning of a circle and an arc*

Evaluation Copy. Do not reproduce. For information visit www.cadcim.com

Linear Diameter Dimensioning

Linear diameter dimensioning is used to dimension the sketches of the revolved components. The sketch for a revolved component is drawn using simple sketcher entities. For example, if you draw a rectangle and revolve it, it will result in a cylinder. Now, if you dimension the rectangle using the linear dimensions, the same dimensions will be displayed when you generate the drawing views of the cylinder. Also, the same dimensions will be used while manufacturing the component. But these linear dimensions will result in a confusing situation in manufacturing. This is because while manufacturing a revolved component, the dimensions have to be specified as the diameter of the revolved component. The linear dimensions will not be acceptable in manufacturing a revolved component. To resolve this problem, the sketches for the revolved features are dimensioned using the linear diameter dimensions. These dimensions display the distance between the two selected line segments as a diameter, that is, double the original length. For example, if the original dimension between two entities is 10 mm, the linear diameter dimension will display it as 20 mm. This is because when you revolve a rectangle with 10 mm width, the diameter of the resultant cylinder will be 20 mm. In this type of dimension, if you select two lines, the line selected first will act as the axis of revolution for the sketch and the line selected last will result in the outer surface of the revolved feature. It means the line selected last will be the one that will be dimensioned. But, if one of these lines is a centerline drawn by choosing the **Centerline** tool from the **Format** panel, the centerline will be considered as the axis of revolution.

To apply linear diameter dimensions, invoke the **Dimension** tool; you will be prompted to select the geometry to dimension. Select the first line and then the second line with reference to which you want to apply the linear diameter dimensions. If the center line is selected as a reference, the linear diameter dimension will be displayed. Otherwise, right-click and then choose **Linear Diameter** from the Marking menu, see Figure 2-81. You will notice that the distance between the two lines is displayed as twice the distance. Also, the dimension value is preceded by the **Ø** symbol, indicating that it is a linear diameter dimension. Figures 2-82 and 2-83 show the use of linear diameter dimensioning.

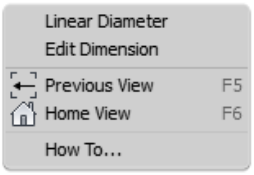

Figure 2-81 *The* ***Linear Diameter*** *option*

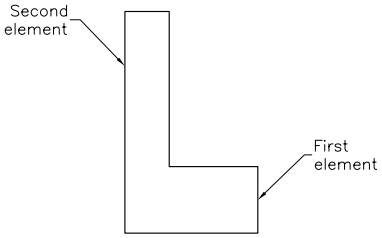

Figure 2-82 *Selecting elements for linear diameter dimension*

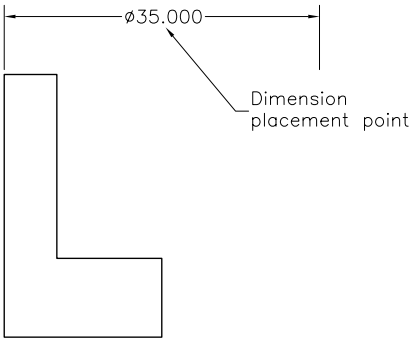

Figure 2-83 *The linear diameter dimension*

Evaluation Copy. Do not reproduce. For information visit www.cadcim.com

Tip

*After invoking the **Dimension** tool, as you move the cursor close to the sketched entities, a small symbol will be displayed close to the cursor. This symbol displays the type of dimension that will be applied. For example, if you select a line, the linear dimensioning or aligned dimensioning symbol will be displayed. If you move the cursor close to another line after selecting the first, the symbol of angular dimensioning will be displayed. These symbols help you in determining the type of dimensions that will be applied.*

*In Autodesk Inventor, the ellipses are dimensioned as half of the major and minor axes distances. To dimension an ellipse, invoke the **Dimension** tool and then select the ellipse. Now, if you move the cursor in a vertical direction, the axis of the ellipse along the X-axis will be dimensioned in terms of its half length. Similarly, if you move the cursor in a horizontal direction, the axis of the ellipse along the Y axis will be dimensioned equal to its half-length.*

To distinguish whether the dimension applied to an arc or a circle is a radius or a diameter, try to locate the number of arrowheads in the dimension. If there are two arrowheads in the dimension and the dimension line is placed inside the circle or the arc, it is a diameter dimension. The radius dimension has one arrowhead and the dimension line is placed outside the circle or the arc.

EXTRUDING THE SKETCHES

Ribbon: 3D Model > Create > Extrude



The **Extrude** tool is one of the most extensively used tools for creating a design. Extrusion is a process of adding or removing material defined by a sketch, normal to the current sketching plane. If you create the first feature, the options available to you will be used for adding the material and not for removing it. This is because there is no existing feature from which you can remove the material. When you invoke this tool from the **Create** panel in the **Ribbon**, the **Properties-Extrusion** dialog box will be displayed, as shown in Figure 2-84. Alternatively, choose the **Extrude** tool from the Marking menu that is displayed on right-clicking in the graphics window. In addition to this dialog box, a mini toolbar will be displayed in the drawing window. The mini toolbar is a new user interface that provides you with different options to control the extrusion process.

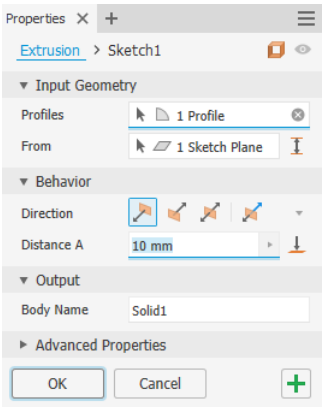

***Figure 2-84** The **Properties-Extrusion** dialog box*

Note

Detailed description about extruding a sketch is provided in Chapter 4.

Evaluation Copy. Do not reproduce. For information visit www.cadcim.com

Evaluation Copy. Do not reproduce. For information visit www.cadcim.com

GENERATING DRAWING VIEWS

After creating a solid model or an assembly, you need to generate its drawing views. Drawing views are the two-dimensional (2D) representations of a solid model or an assembly. Autodesk Inventor provides you with a specialized environment for generating drawing views. This specialized environment is called the Drawing module and has only those tools that are related to drawing views. All modules of Autodesk Inventor are bidirectionally associative. This property ensures that the changes made in a part or an assembly reflect in drawing views. Also, changes made in the dimensions of a component or an assembly in the Drawing module reflect in the part or assembly file. You can invoke the Drawing module for generating drawing views by using any *.idw* format file from the **Metric** tab of the **Create New File** dialog box. Autodesk Inventor has various *.idw* files with predefined drafting standards such as ISO standard, BIS standard, and DIN standard. You can use the required standard file and proceed to the Drawing module for generating drawing views.

Note

Detailed description about generating drawing views is provided in Chapter 11.

TUTORIALS

Although Autodesk Inventor is parametric in nature, yet in this chapter, you will use the Dynamic Input method to draw objects. This is to ensure that you are comfortable working with all drawing options in Autodesk Inventor. In the later chapters, you will use the parametric feature of Autodesk Inventor to resize or draw the entities as per the desired dimension values.

Scan the QR code or visit the following link to get access to the video tutorials: https://www.cadcim.com/autodesk-inventor-professional-2026-video-tutorials.

Tutorial 1

Draw the sketch shown in Figure 2-85. Extrude the sketch by 5 units and then generate a drawing with the orthographic and isometric views of the model. The isometric view of the model is shown in Figure 2-86. You do not need to dimension the drawing.

(Expected time: 30 min)

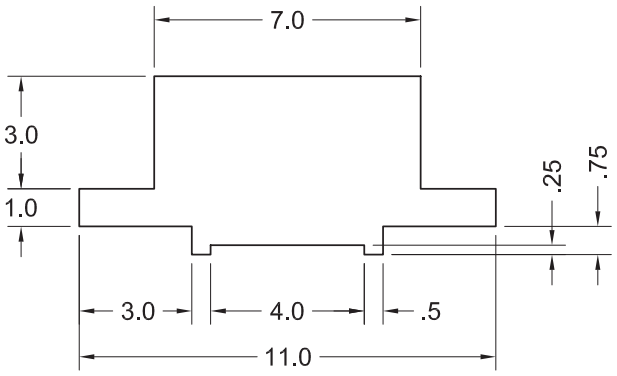

Figure 2-85 *Sketch of the model*

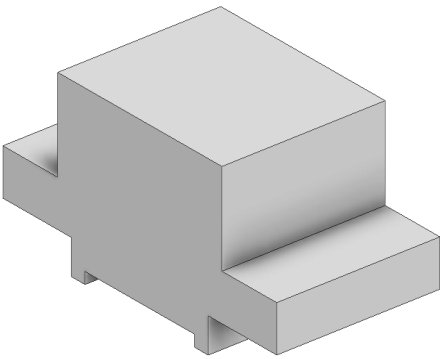

Figure 2-86 *Model for Tutorial 1*

The following steps are required to complete this tutorial:

a. Start a new Autodesk Inventor session and then start a new English part file.
b. Invoke the Sketching environment. Next, draw the sketch by using the **Line** tool and specifying the coordinates of the points in the Dynamic Input mode.
c. Extrude the sketch upto a distance of 5 inch using the **Extrude** tool.
d. Save the model with the name *Tutorial 1* and then generate its drawing views.

Starting Autodesk Inventor

1. Start Autodesk Inventor by double-clicking on its shortcut icon on the desktop of your computer; a new session of Autodesk Inventor starts.

2. Choose the **New** button from the left pane of the initial interface; the **Create New File** dialog box is displayed.

3. Choose the **English** template and then double-click on the **Standard (in).ipt** icon; a new English standard part file starts.

4. Choose the **Start 2D Sketch** tool from the **Sketch** panel of the **3D Model** tab; the default planes are displayed and you are prompted to select the sketching plane.

5. Now, select the **XY** plane (Front Plane) as the sketching plane from the graphics window; the Sketching environment is invoked and the **XY** plane (Front Plane) becomes parallel to the screen.





Note

*1. If by default, the grid lines are not displayed in the Sketching environment, choose the **Application Options** tool from the **Options** panel of the **Tools** tab; the **Application Options** dialog box will be invoked. Now, select the **Grid lines** check box from the **Display** area of the **Sketch** tab.*

2. For the purpose of accuracy, grid lines are turned on in all the tutorials.

Drawing the Sketch

As mentioned earlier, Autodesk Inventor is parametric in nature. Therefore, you can draw the sketch from any point in the drawing window. In this tutorial, you will start the sketch from the midpoint of the line at the bottom, as shown in Figure 2-87. Also, in this tutorial, Dynamic Input has been used to draw the sketch.

Specify the Start Point

Choose the **Line** tool, press Tab>**0**>Tab>**0**>Enter.
*(Choose the **Line** tool from the **Create** panel in the **Sketch** tab; you are prompted to select the first point of the line to be created. Press Tab and enter **0** in the X coordinate field of the Dynamic Input. Next, press Tab, enter **0** in the Y coordinate field, and press Enter).*

Draw Line 1

Move the cursor right, enter **2**>Tab>**0**>Enter.
*(Move the cursor toward right, enter **2** in the length input field, press Tab, enter **0** in the angle input field of the Dynamic Input, and press Enter).* Line 1 is drawn, as shown in Figure 2-87.

Evaluation Copy. Do not reproduce. For information visit www.cadcim.com

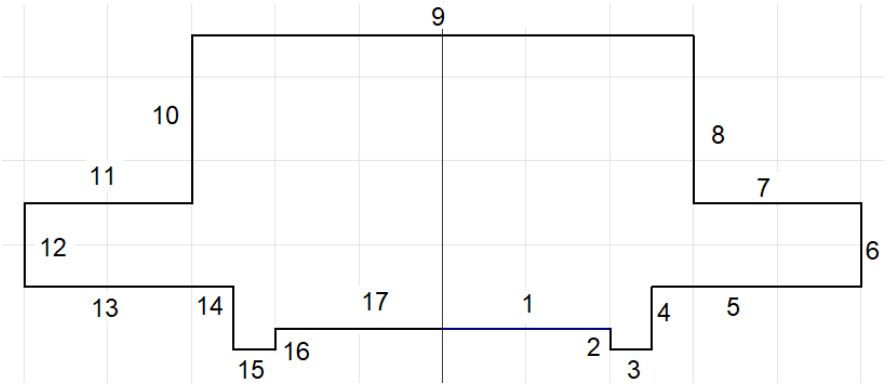

Figure 2-87 *Sketch for Tutorial 1*

Draw Line 2

Move the cursor down, enter **0.25**>Tab>**90**>Enter.
*(Move the cursor down in the graphics window. Next, enter **0.25** in the length input field, press Tab, enter **90** in the angle input field, and press Enter).* Line 2 is drawn, refer to Figure 2-87.

Draw Line 3

Move the cursor right, enter **0.50**>Tab>**90**>Enter.
(*Move the cursor right in the graphics window. Next, enter **0.50** in the length input field, press Tab, enter **90** in the angle input field, and press Enter).* Line 3 is drawn, refer to Figure 2-87.

Draw Line 4

Move the cursor upward, enter **0.75**>Tab>**90**>Enter.
*(Move the cursor upward in the graphics window. Next, enter **0.75** in the length input field, press Tab, enter **90** in the angle input field, and press Enter).* Line 4 is drawn, refer to Figure 2-87.

Draw Line 5

Move the cursor right, enter **3.0**>Tab>**90**>Enter.

Draw Line 6

Move the cursor upward, enter **1.0**>Tab>**90**>Enter.

Draw Line 7

Move the cursor left, enter **2.0**>Tab>**90**>Enter.

Draw Line 8

Move the cursor upward, enter **3.0**>Tab>**90**>Enter.

Draw Line 9

Move the cursor left, enter **7.0**>Tab>**90**>Enter.

Draw Line 10

Move the cursor down, enter **3.0**>Tab>**90**>Enter.

Evaluation Copy. Do not reproduce. For information visit www.cadcim.com

Draw Line 11
Move the cursor left, enter **2.0**>Tab>**90**>Enter.

Draw Line 12
Move the cursor down, enter **1.0**>Tab>**90**>Enter.

Draw Line 13
Move the cursor right, enter **3.0**>Tab>**90**>Enter.

Draw Line 14
Move the cursor down, enter **0.75**>Tab>**90**>Enter.

Draw Line 15
Move the cursor right, enter **0.50**>Tab>**90**>Enter.

Draw Line 16
Move the cursor upward, enter **0.25**>Tab>**90**>Enter.

Draw Line 17
Move the cursor right, enter **2.0**>Tab>**90**>Enter.

Exit the Sketching Environment
Right-click in the graphics window and then choose the **Finish 2D Sketch** button from the Marking menu displayed; the Sketching environment is closed and you switch to the Part modeling environment.

Extruding the Sketch

Next, you need to extrude the sketch.

1. Choose the **Extrude** tool from the **Create** panel of the **3D Model** tab; the **Properties-Extrusion** dialog box is invoked and the sketch gets selected by default.

2. Enter **5** in the **Distance A** edit box available in the **Behavior** node. Alternatively, drag the extrude manipulator to specify the extrusion depth.

3. Choose **OK** from the dialog box to create the model and exit the **Properties-Extrusion** tool. The extruded model is shown in Figure 2-88.

Evaluation Copy. Do not reproduce. For information visit www.cadcim.com

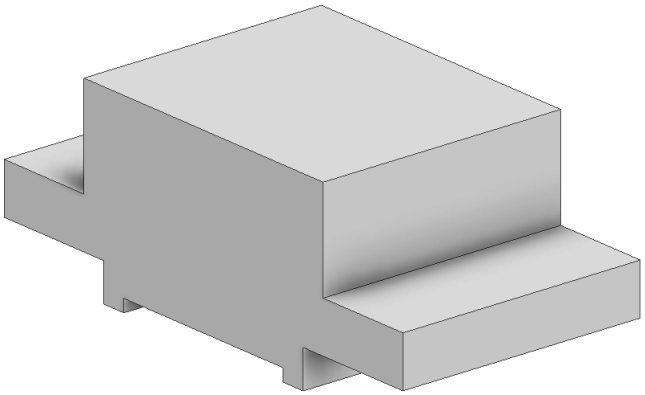

Figure 2-88 *The model created on extruding the sketch*

Saving the Model

Next, you need to save the model.

1. Choose **Save > Save** from the **File** menu to save the model.

Generating Drawing Views of Model

1. Choose the **New** tool from the **Quick Access Toolbar**; the **Create New File** dialog box is displayed.

2. In this dialog box, choose the **English** template and then double-click on the **ANSI (in). idw** option; the default ANSI mm standard drawing sheet is displayed.

3. Choose the **Base View** tool from the **Create** panel; the **Drawing View** dialog box is displayed along with front view of the model.

4. Next, move the cursor upward and generate the top view.

5. Similarly, taking the front view as the parent view, generate the drawing of right-side view and the isometric view, as shown in Figure 2-89.

6. Choose the **OK** button from the **Drawing View** dialog box.

Evaluation Copy. Do not reproduce. For information visit www.cadcim.com

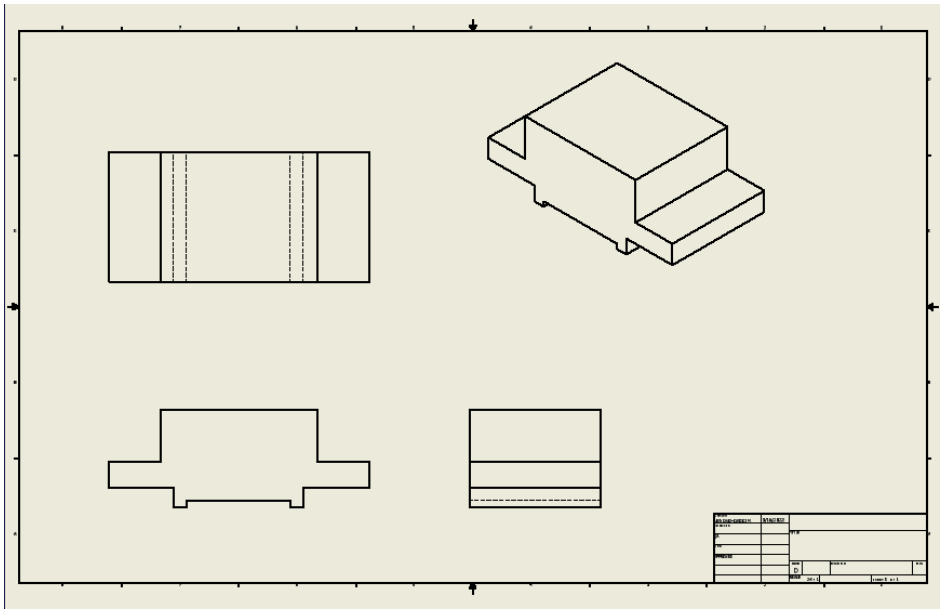

Figure 2-89 *Drawing sheet after generating the drawing views*

Tutorial 2

Draw the sketch shown in Figure 2-90. Extrude the sketch by 10 units and then generate a drawing with the orthographic and isometric views of the model. The isometric view of the model is shown in Figure 2-91. You do not need to dimension the drawing.

(Expected time: 30 min)

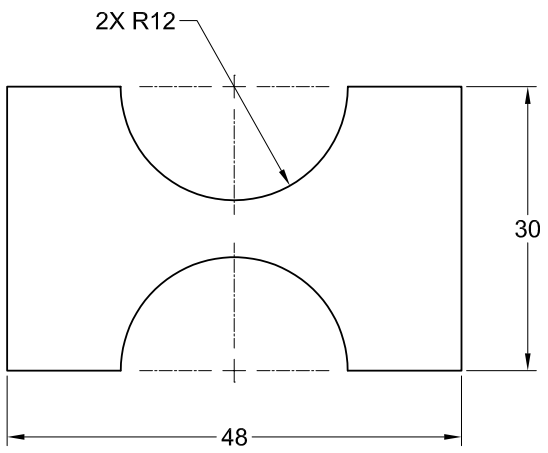

Figure 2-90 *Sketch for Tutorial 2*

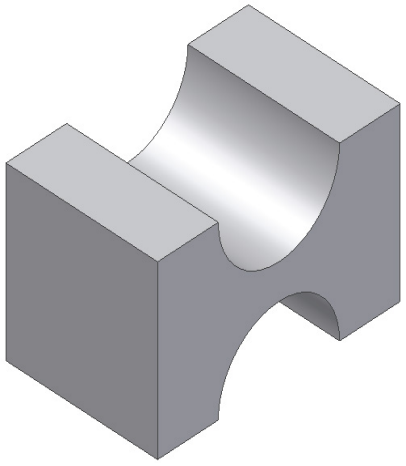

Figure 2-91 *Model for Tutorial 2*

Evaluation Copy. Do not reproduce. For information visit www.cadcim.com

The following steps are required to complete this tutorial:

a. Start a new metric standard part file and invoke the Sketching environment.
b. Draw the sketch by using the **Arc** and **Line** tools, refer to Figure 2-90.
c. Extrude the sketch upto a distance of 10 mm using the **Extrude** tool.
d. Save the model with the name *Tutorial2* and then generate its drawing views.

Starting a New File

1. Choose the **New** button from the left pane of the initial interface; the **Create New File** dialog box is displayed.

2. Choose the **Metric** template and then double-click on the **Standard (mm).ipt** icon; a new Metric standard part file starts.

3. Choose the **Start 2D Sketch** tool from the **Sketch** panel of the **3D Model** tab; the default planes are displayed and you are prompted to select the sketching plane.

4. Now, select the **YZ** Plane (Right plane) as the sketching plane from the graphics window; the Sketching environment is invoked and the **YZ** Plane (Right Plane) becomes parallel to the screen.

Drawing the Sketch

The upper arc of the sketch can be drawn by specifying its center, start, and end points. Therefore, you need to use the **Arc Center Point** tool to draw it.

1. Choose the **Arc Center Point** tool from the **Sketch > Create > Arc** drop-down; you are prompted to specify the center of the arc.

2. Press the Tab key and enter **0** in the X coordinate edit field of the Dynamic Input. Again, press Tab and enter **0** in the Y coordinate edit field. Next, press Enter to specify the center of the arc; the center of the arc (Point 1) is created, as shown in Figure 2-92, and you are prompted to specify the start point of the arc.

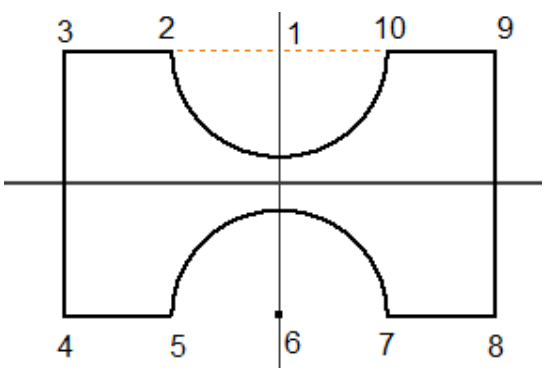

Figure 2-92 *Sketch showing different points*

Evaluation Copy. Do not reproduce. For information visit www.cadcim.com



Note

In Figure 2-92, the major and minor grid lines, and the triad have not been displayed for better display of the sketch and the imaginary lines.

3. Enter **12** in the length input field, press Tab, enter **90** in the angle input field of the Dynamic Input, and press Enter; the first point (Point 2) on the arc is defined, refer to Figure 2-92. Now, you need to specify the endpoint of the arc.

4. Move the mouse cursor anticlockwise and enter **180** in the angle input field and press Enter; the upper arc is drawn, as shown in Figure 2-93.

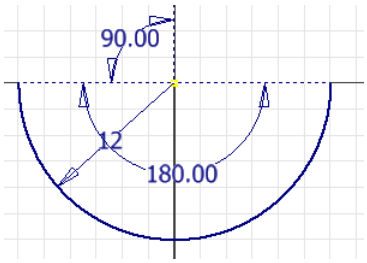

Figure 2-93 *Sketch showing upper arc*

Next, you need to draw lines in the sketch.

5. Choose the **Line** tool from the **Create** panel; you are prompted to specify the start point of the line.



6. Move the cursor close to the start point of the arc; the yellow circle snaps to the start point of the arc and turns green indicating that the cursor has snapped to the start point of the arc. Press the left mouse button to select this point as the start point of the line.

7. Move the cursor left, enter **12**>Tab>**90**>Enter.

8. Move the cursor downward, enter **30**>Tab>**90**>Enter.

9. Move the cursor right, enter **12**>Tab> **90**>Enter. Figure 2-92 shows the different points of sketch for Tutorial 2.

Now, you need to draw the lower arc of the sketch. You can use the **Three Point Arc** tool to draw the arc.

10. Choose the **Three Point Arc** tool and click on the end point of the last line.

11. Enter **24** in the length input field, press Tab, enter **90** in the angle input field in the Dynamic Input, and press Enter; the endpoint (Point 7) on the lower arc is defined, refer to Figure 2-92. Now, you need to specify the center point of the arc.

Evaluation Copy. Do not reproduce. For information visit www.cadcim.com

12. Move the cursor upward, enter **12** in the length input field and press Enter; the lower arc is created, as shown in Figure 2-94.

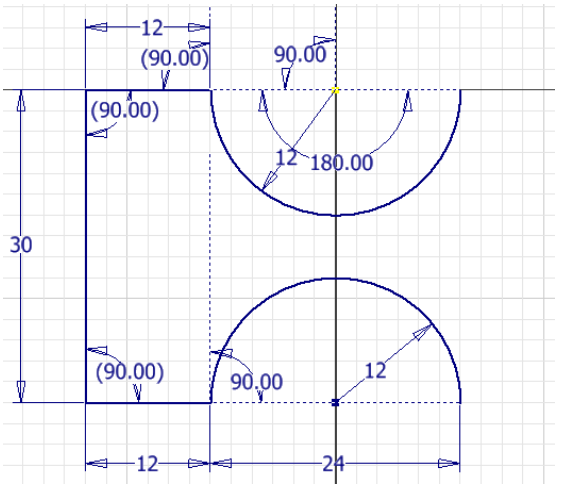

Figure 2-94 *Sketch showing lower arc*

Next, you need to draw the remaining lines of the sketch using the **Line** tool.

13. Choose the **Line** tool from the **Create** panel and click on the end point (point 7) of the lower arc.

14. Move the cursor right, enter **12**>Tab>**90**>Enter.

15. Move the cursor upward, enter **30**>Tab>**90**>Enter.

16. Move the cursor left, enter **12**>Tab>**90**>Enter.

17. Exit the **Line** tool. The final sketch for Tutorial 2 is shown in Figure 2-95.

18. Right-click in the graphics window and then choose the **Finish 2D Sketch** button from the Marking menu displayed; the Sketching environment is closed and you switch to the Part modeling environment.

Evaluation Copy. Do not reproduce. For information visit www.cadcim.com

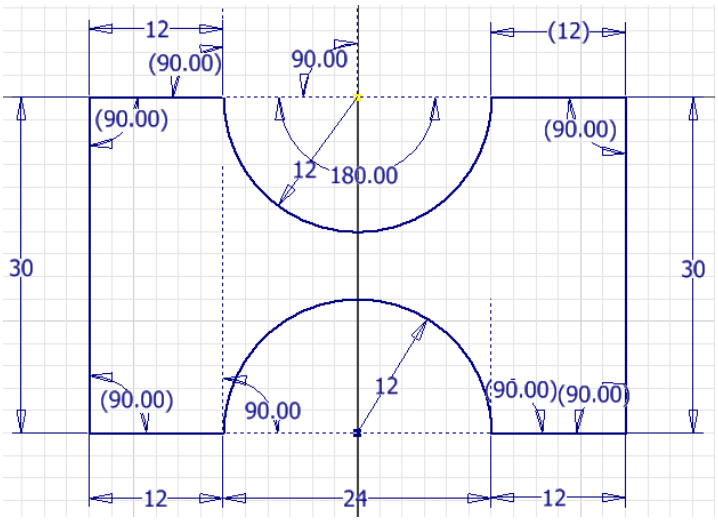

Figure 2-95 *Final sketch for Tutorial 2*

Extruding the Sketch

Next, you need to extrude the sketch.

1. Choose the **Extrude** tool from the **Create** panel of the **3D Model** tab; the **Properties-Extrusion** dialog box is displayed and the sketch gets selected by default.

2. Enter **20** in the **Distance A** edit box available in the **Behavior** node. You can also use the extrude manipulator to specify the extrusion depth.

3. Choose **OK** from the dialog box to create the model and exit the **Properties-Extrusion** tool. The extruded model is shown in Figure 2-96.

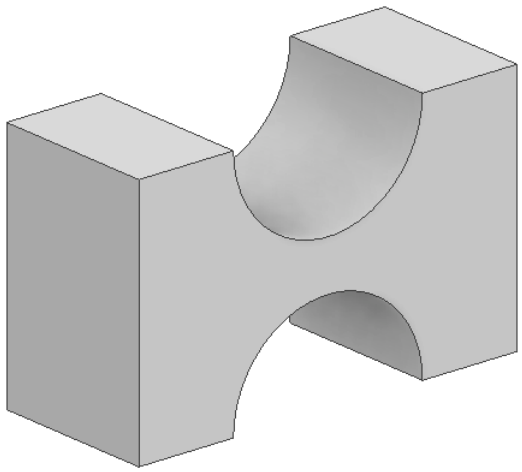

Figure 2-96 *The model created on extruding the sketch*

Evaluation Copy. Do not reproduce. For information visit www.cadcim.com

Saving the Model

Next, you need to save the model.

1. Choose **Save > Save** from the **File** menu to save the model.

Generating Drawing Views of Model

1. Choose the **New** tool from the **Quick Access Toolbar**; the **Create New File** dialog box is displayed.

2. In this dialog box, choose the **Metric** template and then double-click on the **ANSI (mm). idw** option; the default ANSI mm standard drawing sheet is displayed.

3. Choose the **Base View** tool from the **Create** panel; the **Drawing View** dialog box is displayed along with front view of the model.

4. Next, move the cursor upward and generate the top view.

5. Similarly, taking the front view as the parent view, generate the drawing of right-side view and the isometric view, as shown in Figure 2-97.

6. Choose the **OK** button from the **Drawing View** dialog box.

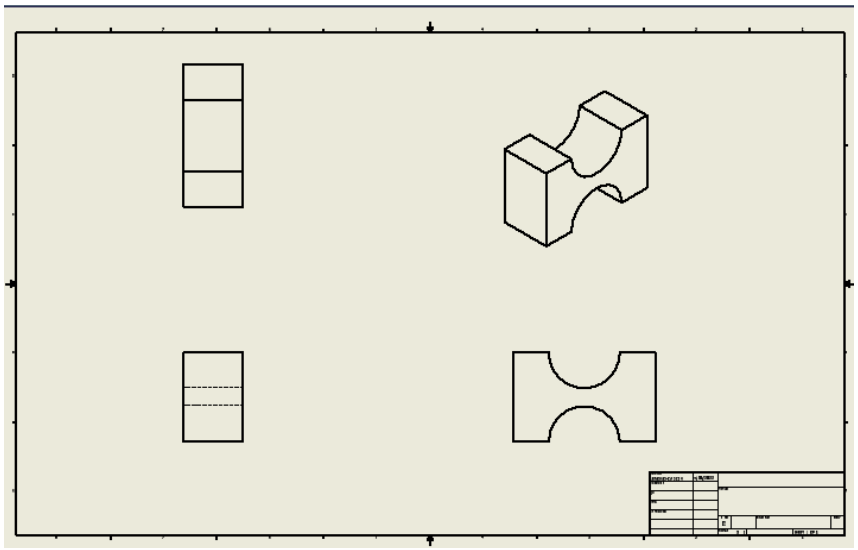

Figure 2-97 *Drawing sheet after generating the drawing views*

Tutorial 3

Draw the sketch shown in Figure 2-98. Extrude the sketch by 20 units and then generate a drawing with the orthographic and isometric views of the model. The isometric view of the model is shown in Figure 2-99. You do not need to dimension the drawing.

(Expected time: 30 min)

Evaluation Copy. Do not reproduce. For information visit www.cadcim.com

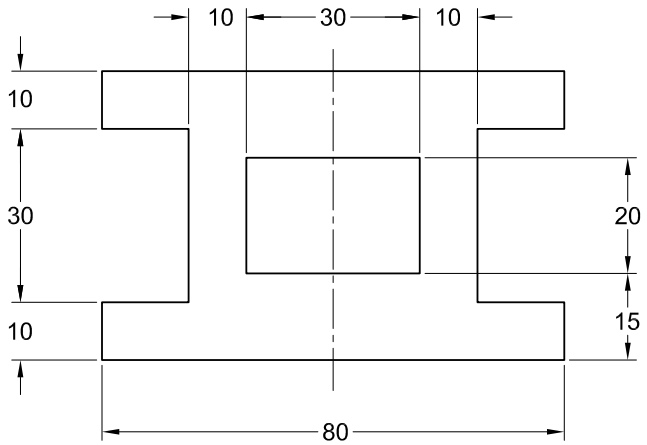

Figure 2-98 *Dimensioned sketch for Tutorial 3*

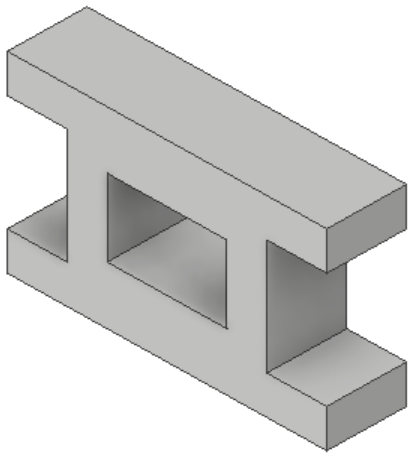

Figure 2-99 *Model for Tutorial 3*

The following steps are required to complete this tutorial:

a. Start a new metric standard part file and invoke the Sketching environment.
b. Draw the initial sketch by using the **Line** and **Two point rectangle** tools.
c. Dimension the sketch.
d. Extrude the sketch upto a distance of 20 mm using the **Extrude** tool.
e. Save the model with the name *Tutorial3* and then generate its drawing views.

Starting a New File and Invoking the Sketching Environment

Start Autodesk Inventor and then invoke the Sketching environment by selecting the sketching plane.

1. Start Autodesk Inventor by double-clicking on its shortcut icon on the desktop of your computer or by using the **Start** menu.

Evaluation Copy. Do not reproduce. For information visit www.cadcim.com

2. Choose the **Metric** template and then double-click on the **Standard (mm).ipt** icon; a new Metric standard part file starts.

3. Choose the **Start 2D Sketch** tool from the **Sketch** panel of the **3D Model** tab; the default planes are displayed and you are prompted to select the sketching plane.

4. Select the **XY Plane** (Front Plane) as the sketching plane from the graphics window; the Sketching environment is invoked and the **XY Plane** (Front Plane) becomes parallel to the screen.

Drawing and Dimensioning the Sketch

1. Draw line 1 and line 2 of any length as shown in Figure 2-100(a). Make sure the line 1 is horizontal and line 2 is vertical.

2. Choose the **Dimension** tool from the **Constrain** panel of the **Sketch** tab. Alternatively, right-click anywhere in the graphics window and then choose **General Dimension** from the Marking menu displayed. Next, select line 1, refer to Figure 2-100(b).

3. Place the dimension below line 1; the **Edit Dimension** edit box is displayed. Enter **40** as the length of line 1 in this edit box and then click on the check mark on the right of this edit box.

4. As the **Dimension** tool is still active, you are prompted again to select the geometry to dimension. Select line 2 and place the dimension on the right of this line, as shown in Figure 2-100(b); the **Edit Dimension** edit box is displayed. Change the length of this line to **10** in this edit box and press Enter.

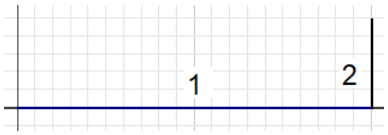

Figure 2-100(a) *Sketch drawn using the sketching tools*

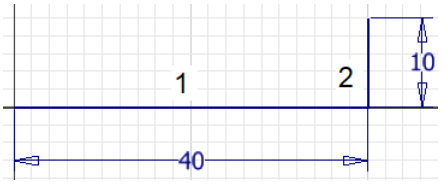

Figure 2-100(b) *Dimensioning the sketch*

5. Draw lines 3, 4, 5, 6, and 7, as shown in Figure 2-100(c). Make sure the lines are horizontal and vertical.

6. Dimension the lines, as shown in Figure 2-100(d).

Evaluation Copy. Do not reproduce. For information visit www.cadcim.com

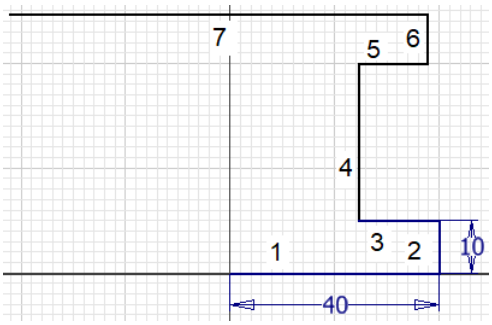

Figure 2-100(c) *Sketch drawn using the sketching tools*

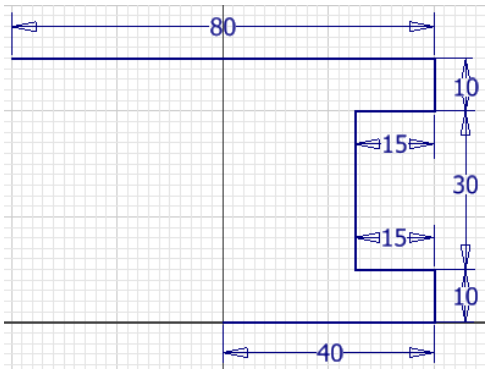

Figure 2-100(d) *Dimensioning the sketch*

7. Draw the remaining lines, as shown in Figure 2-100(e).

8. Dimension the lines, as shown in Figure 2-100(f).

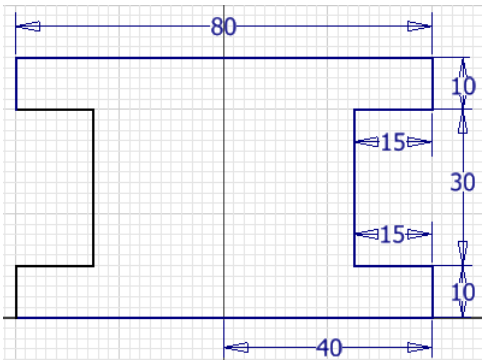

Figure 2-100(e) *Sketch drawn using the sketching tools*

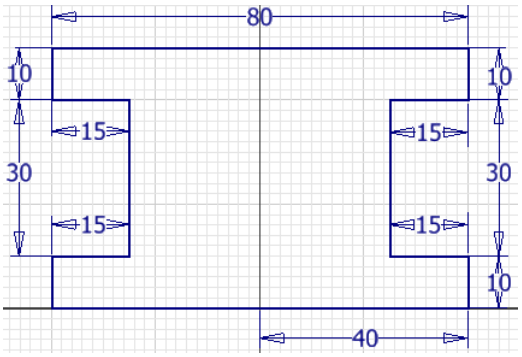

Figure 2-100(f) *Dimensioning the sketch*

9. Draw a rectangle using the **Two-Point Rectangle** tool, as shown in Figure 2-100(g).

10. Dimension the rectangle, as shown in Figure 2-100(h).

11. Right-click in the graphics window and then choose the **Finish 2D Sketch** button from the Marking menu displayed; the Sketching environment is closed and you switch to the Part modeling environment.

Evaluation Copy. Do not reproduce. For information visit www.cadcim.com

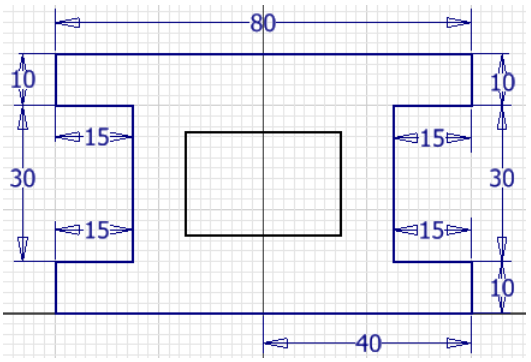

Figure 2-100(g) *Rectangle drawn using* ***2-Point Rectangle*** *tool*

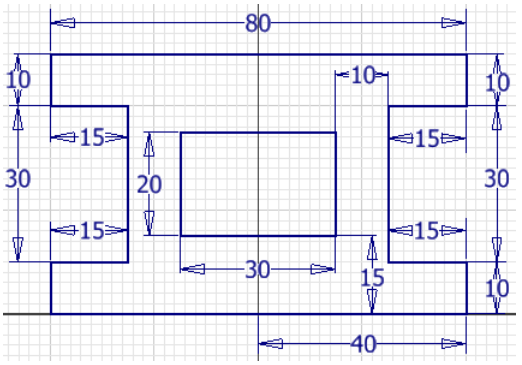

Figure 2-100(h) *Dimensioning the rectangle*

Extruding the Sketch

Next, you need to extrude the sketch.

1. Choose the **Extrude** tool from the **Create** panel of the **3D Model** tab to invoke the **Properties-Extrusion** dialog box.

   As the sketch consists of two loops, the sketch is not automatically selected. Therefore, you need to select the profile to be extruded.

2. Move the cursor outside the inner loop but inside the outer loop; the profile is highlighted.

3. Click anywhere in the highlighted area; a preview of the extruded model is displayed in the drawing window.

4. Enter **20** in the **Distance A** edit box available in the **Behavior** node. You can also use the extrude manipulator to specify the extrusion depth.

5. Choose **OK** from the dialog box to create the model and exit the **Properties-Extrusion** tool. The extruded model is shown in Figure 2-101.

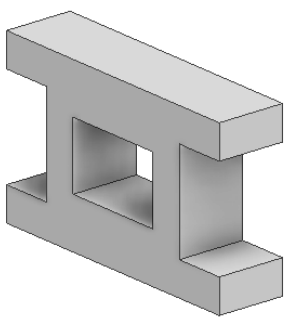

Figure 2-101 *The model created on extruding the sketch*

Evaluation Copy. Do not reproduce. For information visit www.cadcim.com

Saving the Model

Next, you need to save the model.

1. Choose **Save > Save** from the **File** menu to save the model.

Generating Drawing Views of Model

1. Choose the **New** tool from the **Quick Access Toolbar**; the **Create New File** dialog box is displayed.

2. In this dialog box, choose the **Metric** tab and then double-click on the **ANSI (mm).idw** option; the default ANSI mm standard drawing sheet is displayed.

3. Choose the **Base View** tool from the **Create** panel; the **Drawing View** dialog box is displayed along with front view of the model.

4. Next, move the cursor upward and generate the top view.

5. Similarly, taking the front view as the parent view, generate the drawing of right-side view and the isometric view, as shown in Figure 2-102.

6. Choose the **OK** button from the **Drawing View** dialog box.

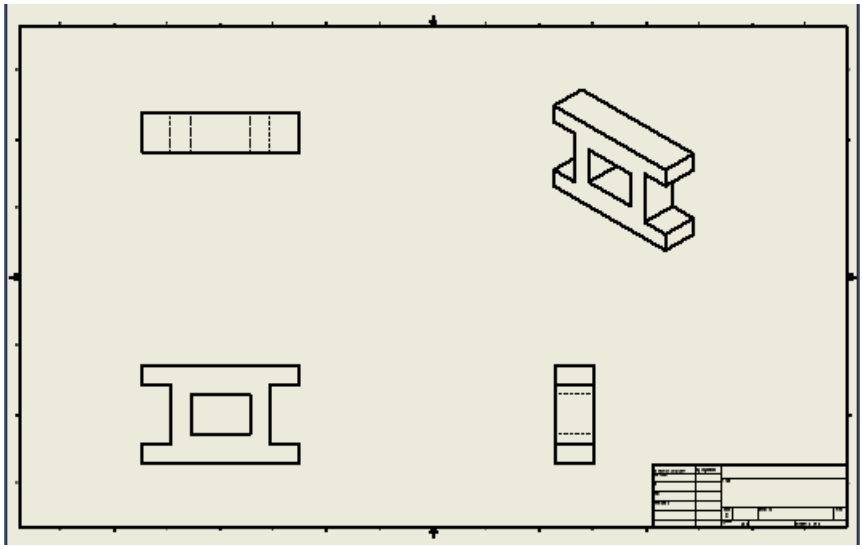

Figure 2-102 *Drawing sheet after generating the drawing views*

Tutorial 4

Draw the sketch shown in Figure 2-103. Revolve the sketch and then generate a drawing with the orthographic and isometric views of the model. The isometric view of the model is shown in

Evaluation Copy. Do not reproduce. For information visit www.cadcim.com

Figure 2-104. You do not need to dimension the drawing. Use Dynamic Input to draw the feature. **(Expected time: 30 min)**

The following steps are required to complete this tutorial:

a. Start a new metric standard part file and invoke the Sketching environment.
b. Draw the sketch with the help of Dynamic Input by using the **Line** tool.
c. Draw fillets.
d. Revolve the sketch.
e. Save the model with the name *Tutorial4* and then generate its drawing views.

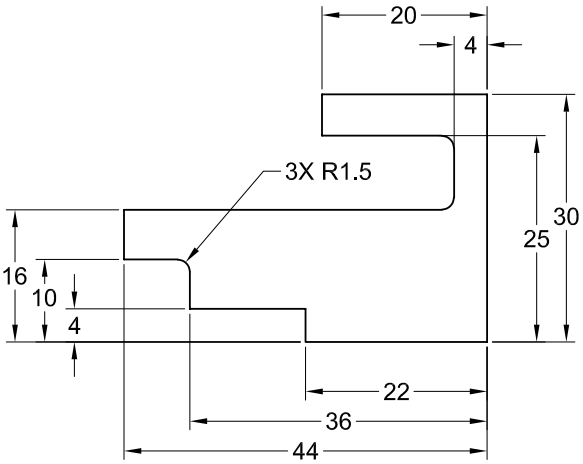

Figure 2-103 *Sketch for the revolved model*

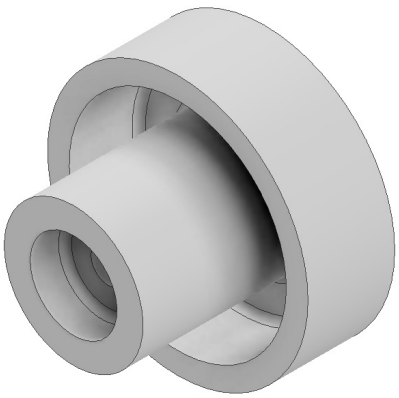

Figure 2-104 *Revolved model for Tutorial 4*

Starting a New File

1. Choose the **New** button from the left pane of the initial interface; the **Create New File** dialog box is displayed.

2. Choose **Metric** to display the standard metric templates. Double-click on **Standard (mm).ipt** to start a new metric part file.

3. Choose the **Start 2D Sketch** tool from the **Sketch** panel of the **3D Model** tab; the default planes are displayed and you are prompted to select the sketching plane.

4. Now, select the **YZ** Plane (Right Plane) as the sketching plane from the graphics window; the Sketching environment is invoked and the **YZ** Plane (Right Plane) becomes parallel to the screen.

Drawing the Sketch

1. Choose the **Line** tool, press Tab>**0**>Tab>**0**>Enter.
*(Choose the **Line** tool from the **Create** panel in the **Sketch** tab; you are prompted to select the*



Evaluation Copy. Do not reproduce. For information visit www.cadcim.com

*first point of the line to be created. Press Tab and enter **0** in the X co-ordinate field of the Dynamic Input. Next, press Tab, enter **0** in the Y coordinate field, and press Enter).*

2. Move the cursor left, enter **22**>Tab>**90**>Enter.
*(Move the cursor toward left, enter **22** in the length input field, enter **90** in the angle input field of the Dynamic Input, and press Enter).* Line 1 is drawn, as shown in Figure 2-105.

3. Move the cursor upward, enter **4**>Tab>**90**>Enter.
*(Move the cursor upward in the graphics window. Next, enter **4** in the length input field, press Tab, enter **90** in the angle input field, and press Enter).* Line 2 is drawn, as shown in Figure 2-105.

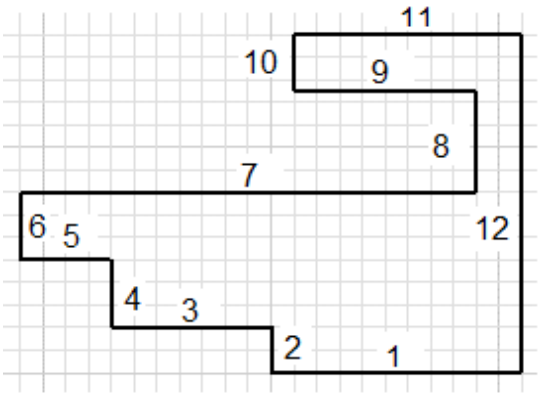

Figure 2-105 *Sketch after drawing the lines*

4. Move the cursor left, enter **14**>Tab>**90**>Enter.
*(Move the cursor toward left in the graphics window. Next, enter **14** in the length input field, press Tab, enter **90** in the angle input field in the Dynamic Input, and press Enter).* Line 3 is drawn, refer to Figure 2-105.

5. Move the cursor upward, enter **6**>Tab>**90**>Enter.

6. Move the cursor left, enter **8**>Tab>**90**>Enter.

7. Move the cursor upward, enter **6**>Tab>**90**>Enter.

8. Move the cursor right, enter **40**>Tab>**90**>Enter.

9. Move the cursor upward, enter **9**>Tab>**90**>Enter.

10. Move the cursor left, enter **16**>Tab>**90**>Enter.

11. Move the cursor upward, enter **5**>Tab>**90**>Enter.

12. Move the cursor right, enter **20**>Tab>**90**>Enter.

Evaluation Copy. Do not reproduce. For information visit www.cadcim.com

13. Move the cursor downward, enter **30**>Tab>**90**>Enter.

14. The initial sketch is drawn. Exit the **Line** tool by choosing **OK** from the Marking menu.

Drawing Fillets

1. Choose the **Fillet** tool from the **Sketch > Create > Fillet/Chamfer** drop-down; the **2D Fillet** dialog box is displayed. Enter **1.5** in the **Radius** edit box of this dialog box. Do not press Enter.



2. Select the line 8 and then line 9, refer to Figure 2-105; a fillet is created between these lines and the radius of the fillet is displayed in the sketch.

3. Similarly, select lines 7 and 8 and then lines 4 and 5 to create a fillet between these lines. Next, right-click, and choose **OK** from the Marking menu to exit the **Fillet** tool after creating all fillets.

   As all the lines are filleted with the same radius value, the radius of the fillet is not displayed on other fillets. This completes the sketch. The final sketch for this tutorial after filleting all the sketches is shown in Figure 2-106.



Note

In Figure 2-106, the display of the dimensions, axes and grids have been turned off for better visibility of the lines of the sketch.

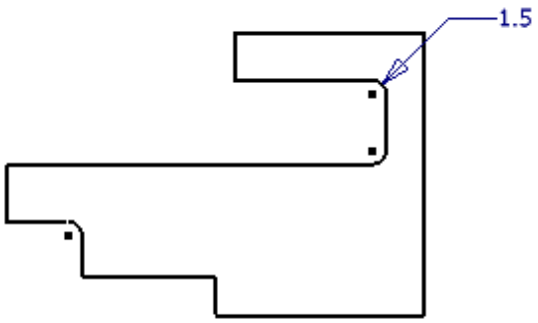

Figure 2-106 *Final sketch after filleting*

4. Right-click in the graphics window and then choose the **Finish 2D Sketch** button from the Marking menu displayed; the Sketching environment is closed and you switch to the Part modeling environment.

Revolving the Sketch

Next, you need to revolve the sketch.

1. Choose the **Revolve** tool from the **Create** panel of the **3D Model** tab to invoke the **Properties-Revolution** dialog box.



Evaluation Copy. Do not reproduce. For information visit www.cadcim.com

2. Select the bottom horizontal line measuring 22 mm as the axis of revolution; the selected line gets displayed in the **Axis** display box.

   When you move the cursor close to this line, it is highlighted. On selecting this line, a preview of the revolved model is displayed in the drawing window.

3. Accept the default values and choose the **OK** button from the **Properties-Revolution** dialog box. The revolved model is shown in Figure 2-107.

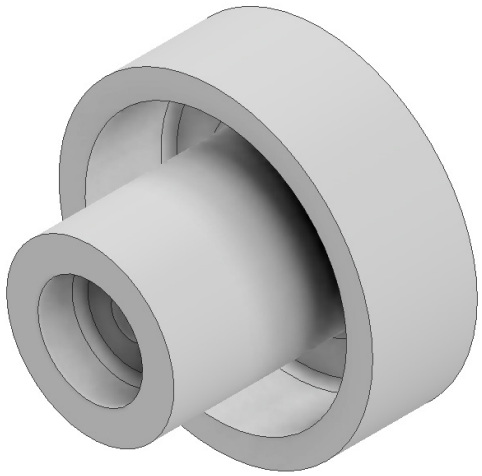

Figure 2-107 *The model created on revolving the sketch*

Saving the Model

Next, you need to save the model.

1. Choose **Save > Save** from the **File** menu to save the model.

Generating Drawing Views of Model

1. Choose the **New** tool from the **Quick Access Toolbar**; the **Create New File** dialog box is displayed.

2. In this dialog box, choose the **Metric** tab and then double-click on the **ANSI (mm).idw** option; the default ANSI mm standard drawing sheet is displayed.

3. Choose the **Base View** tool from the **Create** panel; the **Drawing View** dialog box is displayed along with front view of the model.

4. Next, move the cursor upward and generate the top view.

5. Similarly, taking the front view as the parent view, generate the drawing of right-side view and the isometric view, as shown in Figure 2-108.

6. Choose the **OK** button from the **Drawing View** dialog box.

Evaluation Copy. Do not reproduce. For information visit www.cadcim.com

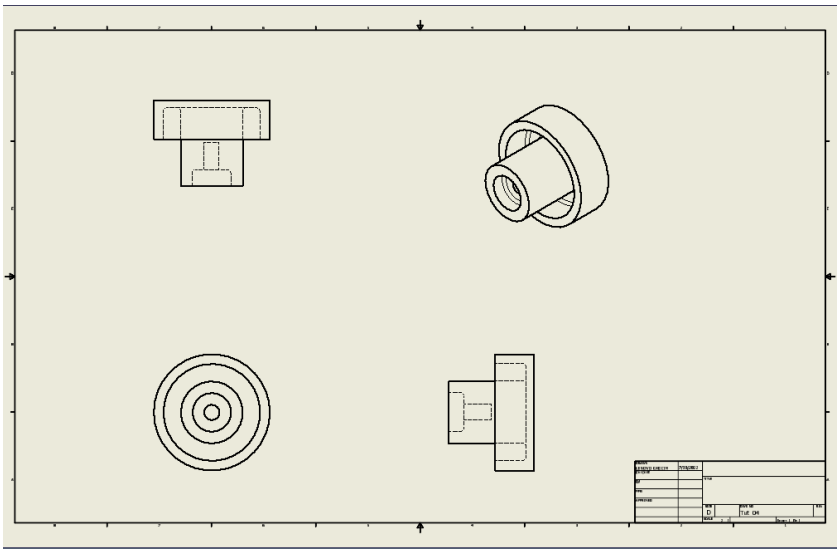

Figure 2-108 *Drawing sheet after generating the drawing views*

Self-Evaluation Test

Answer the following questions and then compare them to those given at the end of this chapter:

1. In Autodesk Inventor, the two types of sketching entities that can be drawn are _____ and _____.

2. In the Sketching environment, the _____ tool is used to place a sketch point or a center point.

3. Filleting is defined as the process of _____ the sharp corners and sharp edges of models.

4. You can toggle between the length and angle input fields by using the _____ key.

5. You can use the _____ toolbar to precisely enter coordinates of the points in the graphics window.

6. You can also delete the sketched entities by pressing the _____ key.

7. In Autodesk Inventor, rectangles are drawn as a combination of _____ entities.

8. You can undo the last drawn spline segment when you are still inside the spline drawing option by choosing _____ from the Marking menu displayed.

9. You can exit the **Line** tool by pressing the _____ key or by choosing _____ from the _____ menu.

Evaluation Copy. Do not reproduce. For information visit www.cadcim.com

10. Most of the designs created in Autodesk Inventor are a combination of sketched features and placed features. (T/F)

11. Whenever you start a new file in the **Part** module, the Sketching environment is invoked by default. (T/F)

12. You cannot turn off the display of grid lines. (T/F)

13. You cannot draw an arc while the **Line** tool is active. (T/F)

Review Questions

Answer the following questions:

1. Which of the following tools in the **Tools** tab is used to invoke additional toolbars?

   (a) **Application Options** (b) **Customize**
   (c) **Document Setting** (d) None of these

2. Which of the following drawing display options is used to interactively zoom in and out a drawing?

   (a) **Zoom All** (b) **Pan**
   (c) **Zoom** (d) **Zoom Window**

3. Which of the following keys is used to restore the previous view?

   (a) F5 (b) F6
   (c) F7 (d) F4

4. Which of the following drawing display options prompts you to select an entity whose magnification has to be increased?

   (a) **Zoom** (b) **Pan**
   (c) **Zoom Selected** (d) None of these

5. In most of the designs, generally the first feature or the base feature is the placed feature. (T/F)

6. You can invoke the options related to sheet metal parts from the *.ipt* file. (T/F)

7. You can change the current project directory and the project files by choosing **Projects** button from the **Open** dialog box. (T/F)

8. You can specify the position of entities dynamically by using the Dynamic Input. (T/F)

Evaluation Copy. Do not reproduce. For information visit www.cadcim.com

9. In Autodesk Inventor, you can save a file in the Sketching environment. (T/F)

10. In Autodesk Inventor, you can start a new file by using the **Open** dialog box. (T/F)

EXERCISES

Exercise 1

Draw the sketch shown in Figure 2-109. Extrude the sketch by 10 units and then generate a drawing with the orthographic and isometric views of the model. The isometric view of the model is shown in Figure 2-110. You do not need to dimension the drawing.

(Expected time: 30 min)

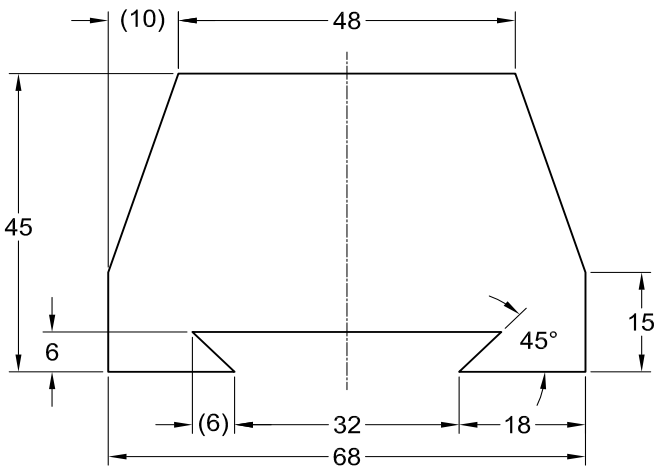

Figure 2-109 *Sketch for Exercise 1*

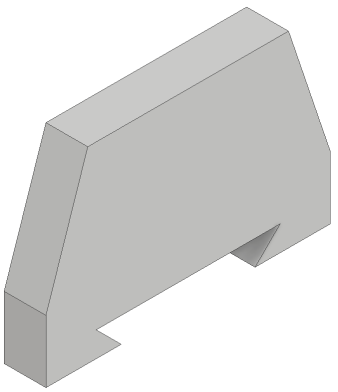

Figure 2-110 *Model for Exercise 1*

Evaluation Copy. Do not reproduce. For information visit www.cadcim.com

Exercise 2

Draw the sketch shown in Figure 2-111. Extrude the sketch by 10 units and then generate a drawing with the orthographic and isometric views of the model. The isometric view of the model is shown in Figure 2-112. You do not need to dimension the drawing.

(Expected time: 30 min)

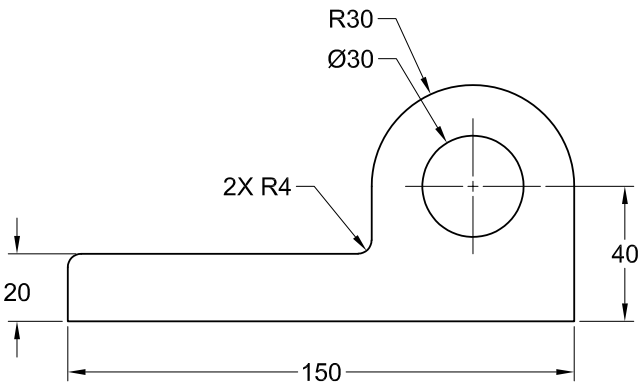

Figure 2-111 *Sketch for Exercise 2*

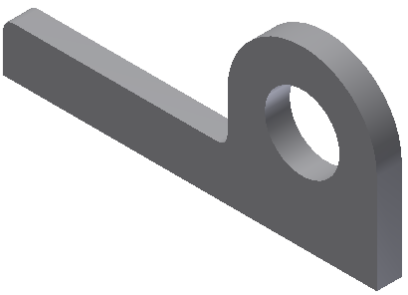

Figure 2-112 *Model for Exercise 2*

Exercise 3

Draw the sketch shown in Figure 2-113. Extrude the sketch by 20 units and then generate a drawing with the orthographic and isometric views of the model. The isometric view of the model is shown in Figure 2-114. You do not need to dimension the drawing.

(Expected time: 45 min)

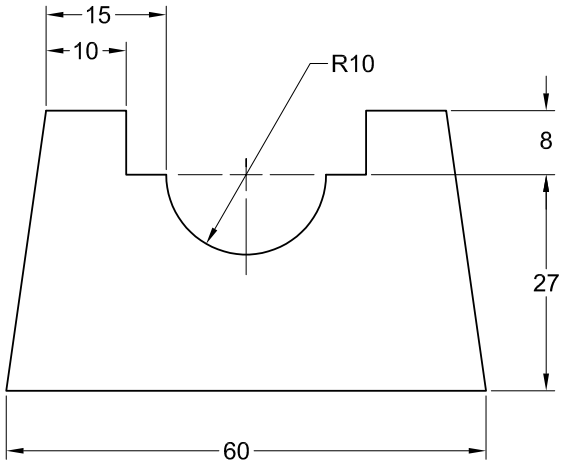

Figure 2-113 *Sketch for Exercise 3*

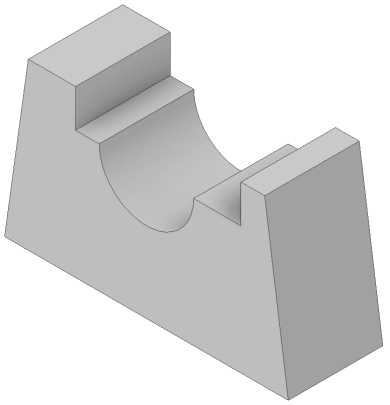

Figure 2-114 *Model for Exercise 3*

Evaluation Copy. Do not reproduce. For information visit www.cadcim.com

Exercise 4

Draw the sketch shown in Figure 2-115. Extrude the sketch by 20 units and then generate a drawing with the orthographic and isometric views of the model. The isometric view of the model is shown in Figure 2-116. You do not need to dimension the drawing.

(Expected time: 45 min)

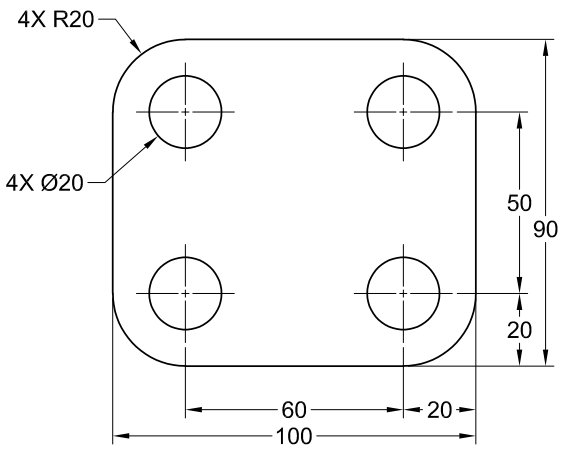

Figure 2-115 *Sketch for Exercise 4*

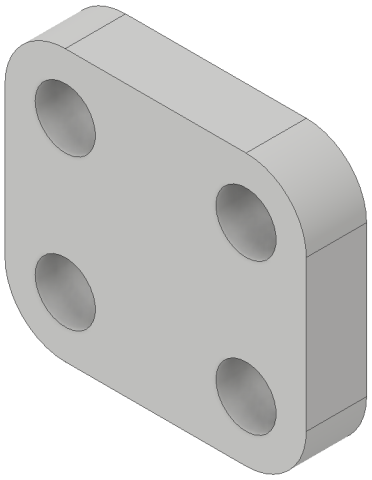

Figure 2-116 *Model for Exercise 4*

Evaluation Copy. Do not reproduce. For information visit www.cadcim.com

Answers to Self-Evaluation Test

1. normal, construction, **2. Point**, **3.** rounding, **4.** Tab, **5. Inventor Precise Input**, **6.** Delete, **7.** individual, **8. Back**, **9.** Esc, **Cancel (Esc)**, Marking menu, **10.** T, **11.** F, **12.** F, **13.** F