# Chapter 18

# Working with Special Design Tools



## Learning Objectives

***After completing this chapter, you will be able to:***

- *Understand the concept of adaptivity and create adaptive parts*
- *Define parameters for creating parts*
- *Create standard and custom iPart factories*
- *Place iParts using the custom and standard iPart factories*
- *Create 3D Sketches*
- *Understand hybrid surface-solid modeling*

# ADAPTIVE PARTS

Adaptive parts automatically update their adaptive features or driven dimensions based on the dimensions and constraints of the relative parts with which they are assembled. Note that while creating the adaptive parts or adaptive features, the corresponding sketch should be partially constrained. The missing dimension and adaptive features will then be modified based on the sizes, location of other components, and constraints applied between the components. You can remove the adaptivity of the components at any time and add the missing dimensions so that the parts do not change their size. To convert a feature or sketch into an adaptive feature, right-click on it in the **Browser Bar** and choose **Adaptive** from the shortcut menu displayed. Similarly, to convert a part into an adaptive part in the **Assembly** module, right-click on the part in the **Browser Bar** and choose **Adaptive** from the shortcut menu displayed. Two semicircular arrows pointing in counterclockwise direction will be displayed on the left of the adaptive part, feature, or sketch in the **Browser Bar**. Remember that components originally created in other solid modeling tools and imported to the Inventor file cannot be converted into an adaptive part.

# DEFINING PARAMETERS

**Ribbon:** Manage > Parameters > Parameters




As mentioned earlier, every dimension in Autodesk Inventor is assigned a unique name termed as parameter. When you specify the value for the dimension, the dimension parameter is equated in an expression with the value that you specified. Autodesk Inventor allows you to use parameters or expressions instead of entering value while dimensioning a sketch. These parameters or expressions can also be entered in the edit boxes of a dialog box while creating a feature. You can create a new parameter by defining it in terms of the other parameter in an expression. The new parameters can be created before or after creating the sketch. You can use the **Parameters** tool to create new parameters. However, you can use this tool to control the relative position of the component in an assembly besides controlling the shape and size of the feature. When you invoke this tool from the **Parameters** panel, the **Parameters** dialog box will be displayed, refer to Figure 18-1. This dialog box has two types of parameters that are discussed next.

## Model Parameters

Model parameters are those that are automatically created when you apply dimensions to the entities or when you create a feature. The model parameters are displayed in a tabular form, as shown in Figure 18-1. The options in this table are discussed next.

### Parameter Name

The **Parameter Name** column displays the names of parameters. To modify the name of a parameter, click on its field in the **Parameter Name** column. The field will change to an edit box and you can enter the new name in it. Note that you cannot duplicate the name of parameters. This means you cannot have two parameters with the same name.

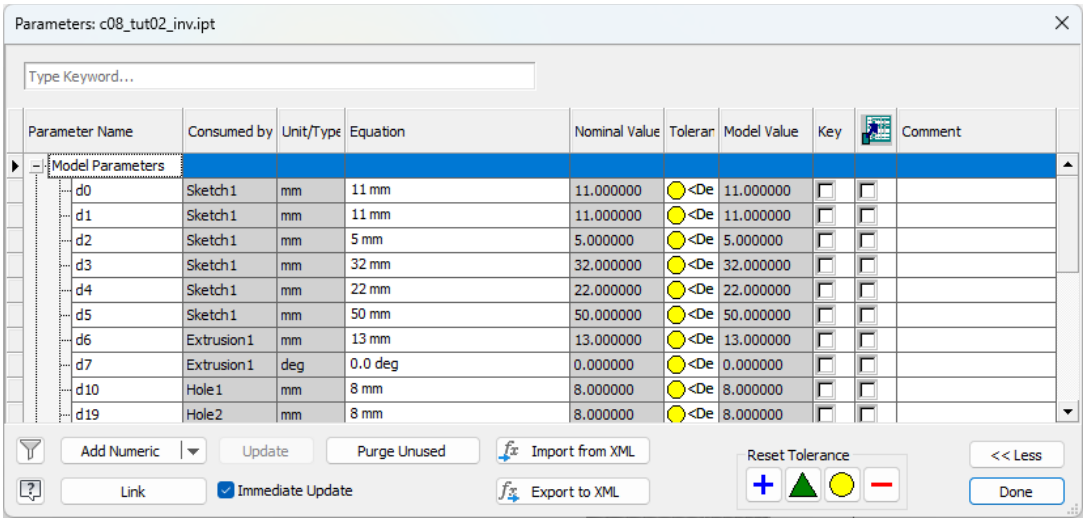


***Figure 18-1*** *The* ***Parameters*** *dialog box*

## Unit/Type

The **Unit/Type** column displays the unit of measuring the parameters. Note that you cannot modify the unit of a parameter.

## Equation

The equations are mathematical expressions in which the parameters are equated with the algebraic or the trigonometric functions. Autodesk Inventor allows you to define the parameters using the existing parameters and equations. For example, to define a parameter d2, you can use the equation such as d2=(d0/2+d1/2), where d0 and d1 are the existing parameters. However, in the d2 field of the **Equation** column, you will not enter "d2=". All you need to enter is (d0/2+d1/2) as the equation. Since it is entered in the d2 field of the **Equation** column, Autodesk Inventor will automatically equate it with the d2 parameter.

You can also add tolerance to the parameter using the **Equation** column. To add tolerance, click on the field corresponding to the required parameter in the **Equation** column; the field changes into an edit box with an arrow on its right. Next, click on this arrow or right-click on the **Equation** field (edit box); a shortcut menu will be displayed. Choose **Tolerance** from this shortcut menu; the **Tolerance** dialog box will be displayed, as shown in Figure 18-2. You can set the tolerance parameters using the options in this dialog box.

## Nominal Value

This column shows the resulting value of the equation and expressions entered in the equations column.

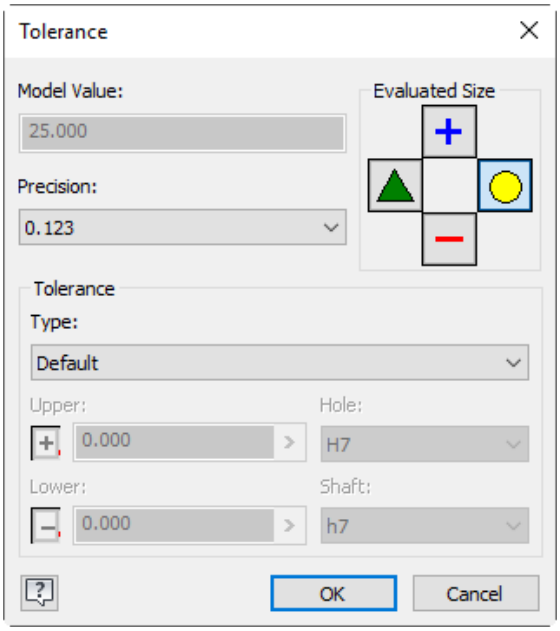


***Figure 18-2*** *The* ***Tolerance*** *dialog box*

## Tol.

The **Tol.** column is used to select the nominal, median, upper, or the lower tolerance size for the dimension. You can select the required tolerance size from the drop-down list that is displayed when you click on the field under the **Tol.** column.

## Model Value

Generally, it is not possible for a component to be manufactured using the nominal values. Therefore, you need to assign some tolerance to the dimension. The **Model Value** column shows the actual value after assigning the tolerance. The value in this column depends on the tolerance assigned to the dimension by using the **Tolerance** dialog box.

## Key

On selecting this check box you can designate the selected parameter as the key parameter. These parameters are easy to identify. You will learn more about keys later in this chapter.

## Export Parameter

The **Export Parameter** column displays the check boxes for each parameter. If you select the check box of a parameter, that parameter will be added to the custom properties and can be displayed in the parts list.

## Comment

The **Comment** column is used to enter some information about the selected parameter. To enter a comment, click on this field. The field gets changed into a text box and you can enter the desired comment in it.

## User Parameters

User parameters are the parameters that are defined by the user for specifying the dimensions of the entities and the features. To create a user-defined parameter, choose the **Add Numeric** button in the **Parameters** dialog box; a new row will be displayed in the **User Parameters** table. You can specify the new parameters of the user-defined parameters in the table. Note that you can modify the units of the user-defined parameter. To modify the units, click on the field below the **Unit** column; the **Unit Type** dialog box will be displayed, as shown in Figure 18-3. You can select the desired units from this dialog box. In addition to the **Add Numeric** option, there are two more options that can be used to create user parameters. These options are **Add Text** and **Add True/False**. These options can be invoked by clicking on the down arrow located on the right of the **Add Numeric** button and then choosing the required option from the flyout. These options work in coordination with the iLogic features of Autodesk Inventor. The options in the **User Parameters** table are similar to those discussed in the **Model Parameters** table.

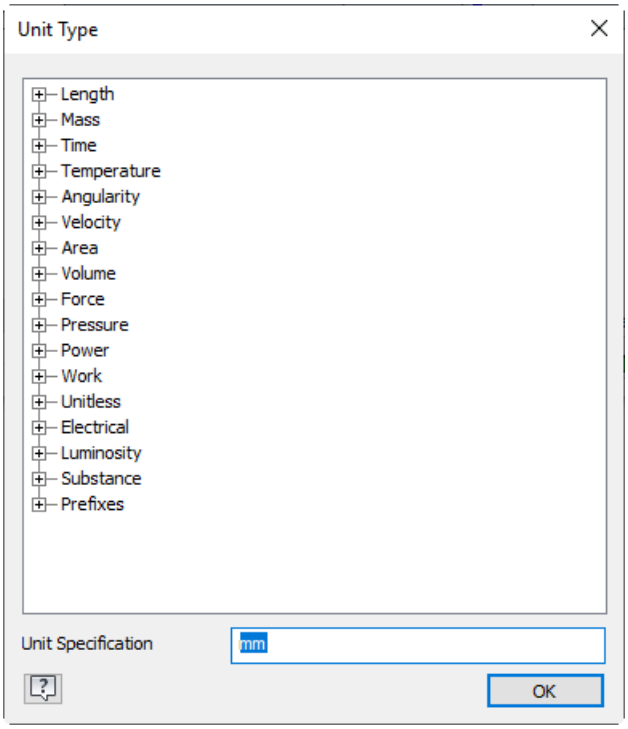


***Figure 18-3*** *The* ***Unit Type*** *dialog box*

## Update

Choose this button to update the feature or the model when the parameters are changed.

## Purge Unused

Choose this button to purge the unused parameters of the model. When you choose this button, a list of all the unused parameters is displayed in a separate window. You can purge them in one operation.

## Immediate Update

This check box is selected by default. As a result, the feature or the model is updated immediately when the parameters are changed. If you clear this check box, you need to choose the **Update** button whenever the parameters are changed.

## Link

In addition to the model parameters and the user-defined parameters, Autodesk Inventor also allows you to create link parameters. The link parameters are created in a separate Microsoft Excel spreadsheet. Note that the model parameters and the user-defined parameters can be used only in the current file, whereas the link parameters can be used in as many number of files as you require. This is because the link parameters are external parameters that can be imported to any file. To import a link parameter, choose the **Link** button; the **Open** dialog box will be displayed, as shown in Figure 18-4. You can specify the name and the location of the Microsoft Excel spreadsheet by using the **Open** dialog box.

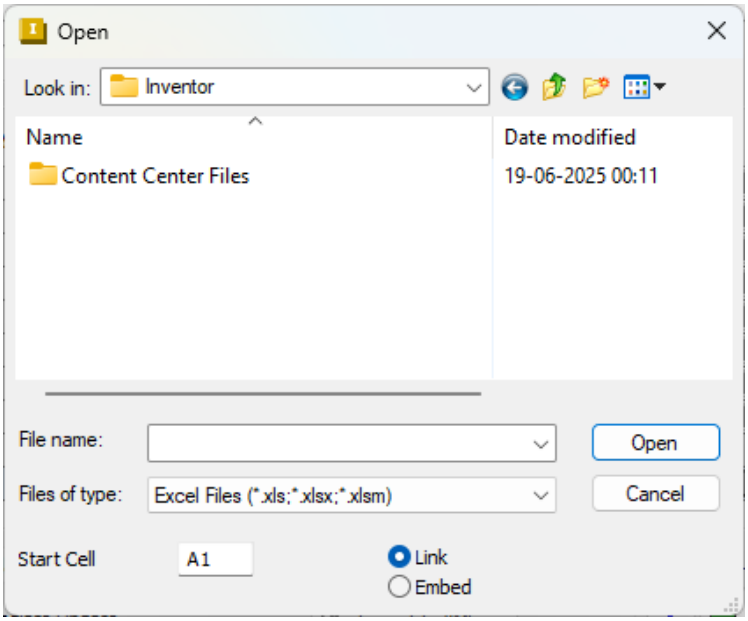


***Figure 18-4*** *The* ***Open*** *dialog box for selecting the spreadsheet*

When you select the spreadsheet, its location and name are displayed in the dialog box and a new table is displayed. This table shows the parameters imported from the selected spreadsheet.

The following table shows a sample of the spreadsheet that can be created in order to be used as link parameters.

| | |
|---|---|
| LEN | 60 |
| LEN1 | 30 |
| WID | 20 |
| HT | 15 |

### Filter

On choosing this button, a flyout will be displayed. The options in this flyout are used to limit the number of parameters displayed in the **Parameters** dialog box. You can choose the **All** option from the flyout if you want all the parameters to be displayed. If you choose the **Key** option, only the parameters that have been assigned the keys will be displayed in the **Parameters** dialog box. But if you choose the **Non-Key** option, only the parameters that have not been assigned any key will be displayed. If you choose the **Renamed** option, only the parameters that have been renamed will be displayed. If you choose the **Equation** option, the parameters that have been defined using equations or the parameters that are used to define equations are displayed in the **Parameters** dialog box.

## WORKING WITH iPARTS

While working on assemblies, you may need to create parts having identical designs but with different sizes, materials, or other variables. Autodesk Inventor allows you to create these parts and then use them with one or more variables. These parts are called as iParts. There is a special technique for creating parts at the places where **"collaborative engineering"** has been used. This special technique is called iPart factories. The iPart factories can be shared by the members in the collaborative engineering environment to create iParts. The properties and dimensions of an iPart factories are saved in a table and you can use these dimensions to create an iPart in an assembly modeling environment.

### Types of iPart Factories

In Autodesk Inventor, you can create two types of iPart factories. These are the Standard iPart factories and the Custom iPart factories. Both these types of iPart factories are discussed next.

#### Standard iPart Factories

The Standard iPart factories create iParts whose dimensions cannot be changed. This type of iPart factory is used to create standard parts. You can store these parts in the location of standard parts so that other members can also use them.

#### Custom iPart Factories

The Custom iPart factories create iParts with different dimensions of a part. You can specify the dimension of the iPart while inserting it in the assembly modeling environment.

### Creating iPart Factories

**Ribbon:** Manage > Author > Create iPart




The iPart factories are created using the standard parts. However, it is recommended that the dimensions of the standard parts should be defined in terms of the model or user-defined parameters using the **Parameters** dialog box. To create the iPart factories,

create a standard part using the parameters and then choose the **Create iPart** tool from the **Author** panel of the **Manage** tab in the **Ribbon**; the **iPart Table** dialog box will be displayed, refer to Figure 18-5. The options in this dialog box are discussed next.

## Parameters Tab

The options in the **Parameters** tab (Figure 18-5) are used to select the parameters and dimensions to be included in the iPart factory. When you invoke this tool, the **Parameters** tab becomes active. This tab of the **iPart Table** dialog box is divided into three areas. These areas are discussed next.

### Part Parameters Pane

The **Part Parameters** pane is on the left side in the **Parameters** tab. This pane lists all the parameters and dimensions in the current part.

### Selected Parameters Pane

The **Selected Parameters** pane is on the right of the **Parameters** tab. This pane lists all the parameters included in the iPart factory. When you invoke the **iPart Table** dialog box, all the user-defined parameters in the current file appear on this pane automatically. You can remove a parameter from this pane by selecting it and then choosing the **Remove** (**<<**) button on the left of this pane. Once the selected parameter is removed from the iPart factory, you cannot modify the value related to this parameter when you create an iPart using this iPart factory. Similarly, you can add a parameter by selecting it from the **Part Parameters** pane and then choosing the **Add** (**>>**) button.

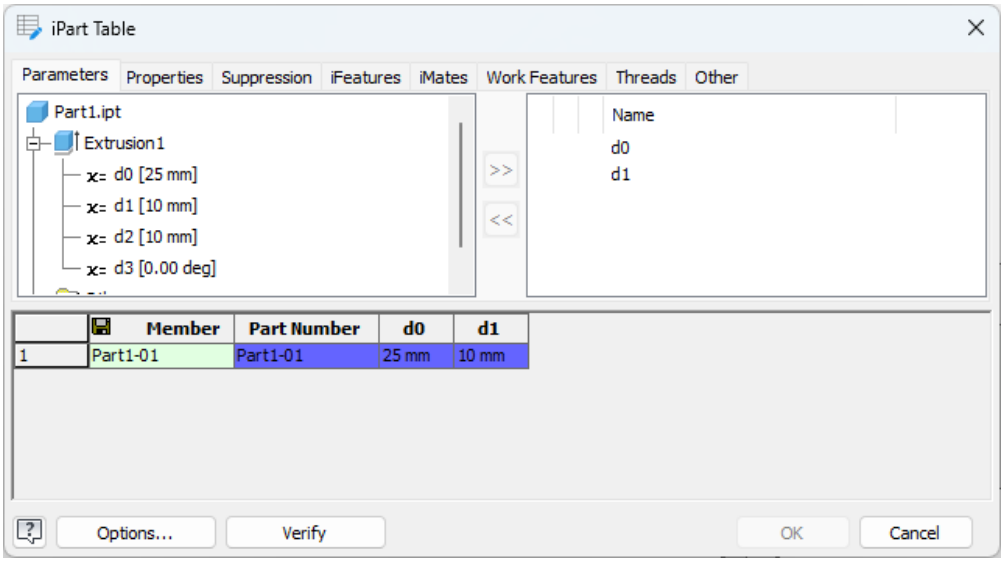


***Figure 18-5*** *The* ***Parameters*** *tab of the* ***iPart Table*** *dialog box*

**Assigning Keys**: By assigning a key to a parameter, you can recognize the values assigned to the parameter. Later on, you can change the attribute values of the parameters that have been assigned the keys. To assign a key to a parameter, click on the corresponding key of the parameter in the **Key** column; a key of numeric value 1 will be assigned to the parameter and the key of that parameter

will turn blue. The keys of the remaining parameters will be gray. To modify the numeric value of the key, click on its value from the **Selected Parameters** pane; a flyout will be displayed. You can select the required key value from the flyout.

**Making a Parameter Column Custom**: Making a parameter column custom allows you to change its value while creating the iPart. To create a standard iPart factory, do not make any parameter column custom. However, to create a custom iPart factory, you need to make at least one parameter custom. To make a parameter column custom, first make sure no key is assigned to it. Next, right-click on it to display the shortcut menu. Choose **Custom Parameter Column** from the shortcut menu that is displayed; the selected parameter is made custom and the current iPart factory is made the custom iPart factory. Whenever you create an iPart using this factory, you can change the value of the custom parameter. The custom parameter column is displayed in blue in the iPart Table below the two list boxes in the **iPart Table** dialog box.

### iPart Table

The **iPart Table** is available below the two list boxes. By default, this table has only one row with the default values of the parameters. The number of columns depend upon the number of parameters in the **Selected Parameters** list box. You can add rows to this table by right-clicking on any cell of the table and choosing **Insert Row** from the shortcut menu. A new row is added to the table. Each row in the **iPart Table** represents a separate iPart in the iPart factory. You can edit the value of the iPart parameter by clicking on its field. The new iPart created using this iPart factory will use the value that you specify.



### Note

*You can customize particular cell of the **iPart Table** by right-clicking on it and choosing **Custom Parameter Cell** from the shortcut menu after assigning key.*

## Properties Tab

The options in the **Properties** tab (Figure 18-6) are used to select the summary of the component, project properties, and physical properties. You can select a property from the **File Properties** pane on the left and add it to the **Selected Properties** pane on the right.

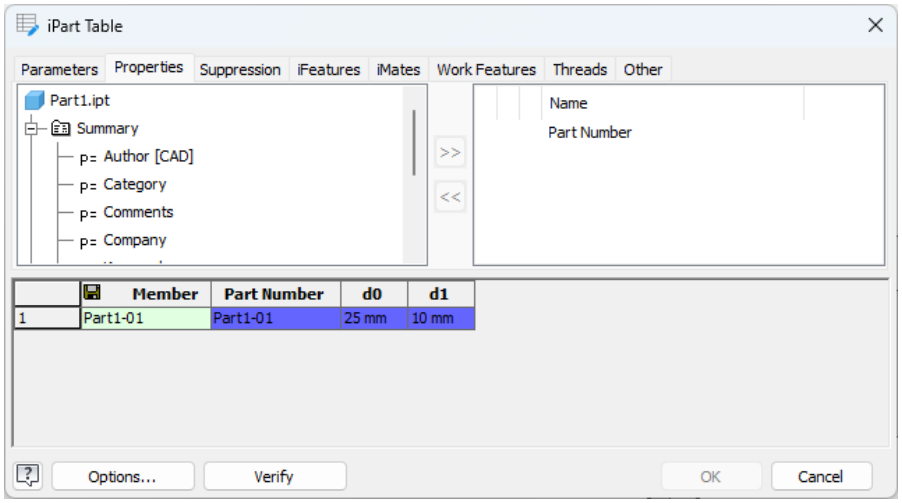


***Figure 18-6*** *The **Properties** tab of the **iPart Table** dialog box*

## Suppression Tab

The options in the **Suppression** tab (Figure 18-7) are used to specify whether the selected features will be computed or suppressed while creating a part using the iPart factory.

If you want that a feature should be suppressed when you create a part using the iPart factory, select it from the **Model Features** pane and add it to the **Selected Features** pane. Next, right-click on it and choose **Custom Parameter Column** from the shortcut menu displayed. The selected feature will be made custom and you can now specify whether the feature will be computed or suppressed while creating an assembly using the iPart factory. If you are selecting the **Suppress** option for a feature, it will not appear in the model.

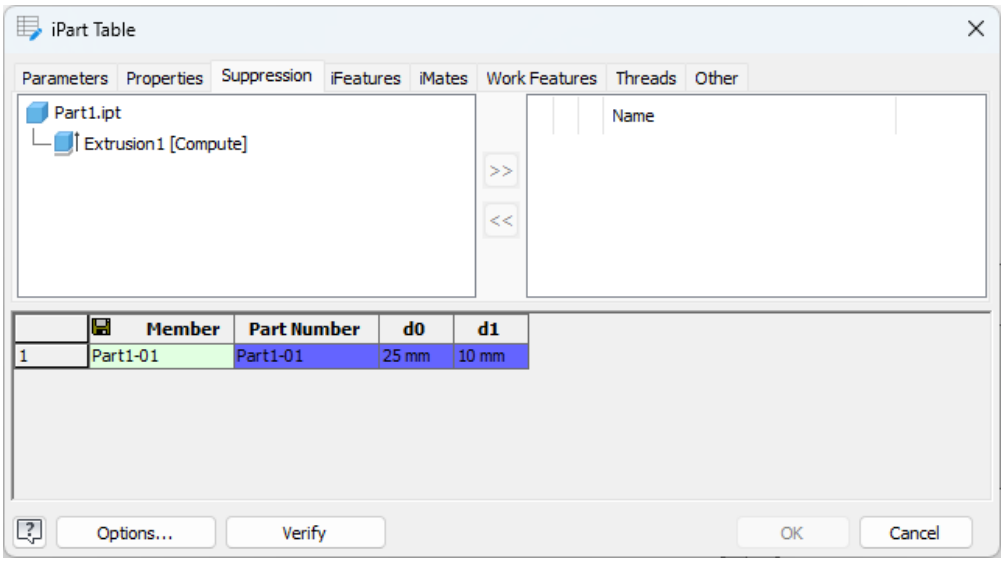


*Figure 18-7 The **Suppression** tab of the **iPart Table** dialog box*

## iFeatures Tab

The options in the **iFeatures** tab (Figure 18-8) are used to specify the table-driven iFeatures to be included in the iPart table. You can specify a unique iFeature row for each iPart row of the included iFeature. By using the iPart table, you can control the suppression status of the iFeature.

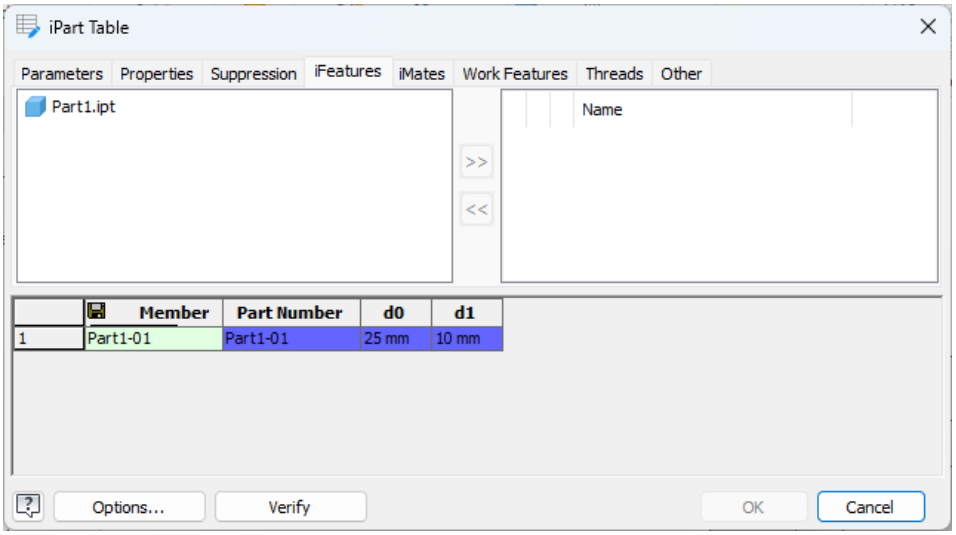


***Figure 18-8*** *The* ***iFeatures*** *tab of the* ***iPart Table*** *dialog box*

## iMates Tab

The **iMates** tab (Figure 18-9) is used to select the iMates applied to the part that will be included in the iPart factory. iMates are created on the parts to be assembled. Creating iMates allows you to assemble parts automatically in the assembly environment. The iMates will be displayed in the **Model iMates** pane if you have created them on the part. To include iMates in the iPart factory, select them from the **Model iMates** pane and add to the **Selected iMates** pane. The selected iMates will be added to the iPart factory.

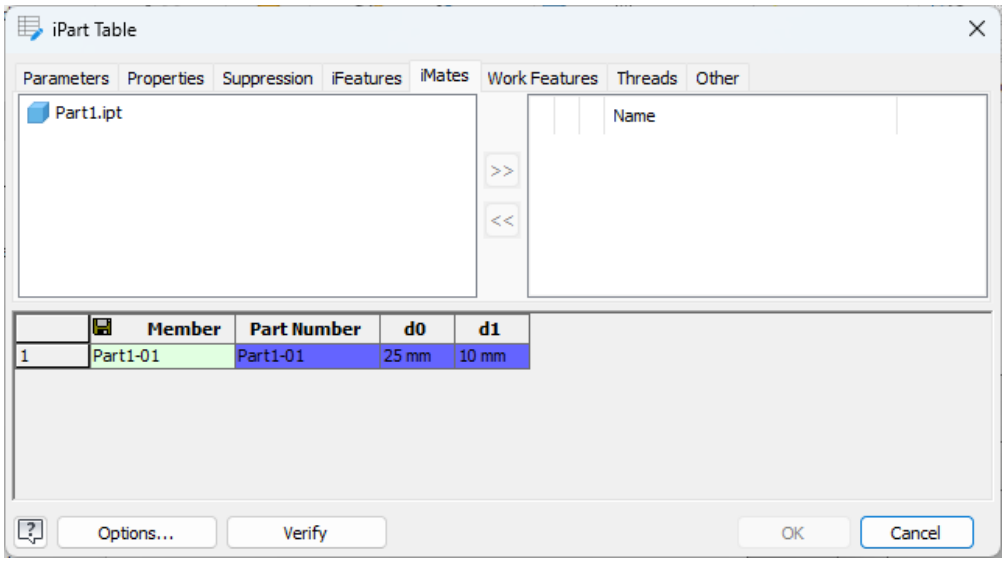


***Figure 18-9*** *The* ***iMates*** *tab of the* ***iPart Table*** *dialog box*

## Work Features Tab

The options in the **Work Features** tab (Figure 18-10) are used to add work features to the iPart factory. The work features of a component include work planes, work axes, and work points. These work features are displayed on the left pane of the **iPart Author** dialog box only when they are created in the part. You can turn on or off the visibility of work features by selecting the required check boxes from the **Object Visibility** drop-down in the **Visibility** panel of the **View** tab.

## Threads Tab

The options in the **Threads** tab (Figure 18-11) are used to add the parameters related to threads in the iPart factory. The threads are displayed on the left pane in the **iPart Author** dialog box only if you have created them in the part. You can select threads parameters from the **Thread definition tree** and add them to the **Selected Thread** pane.

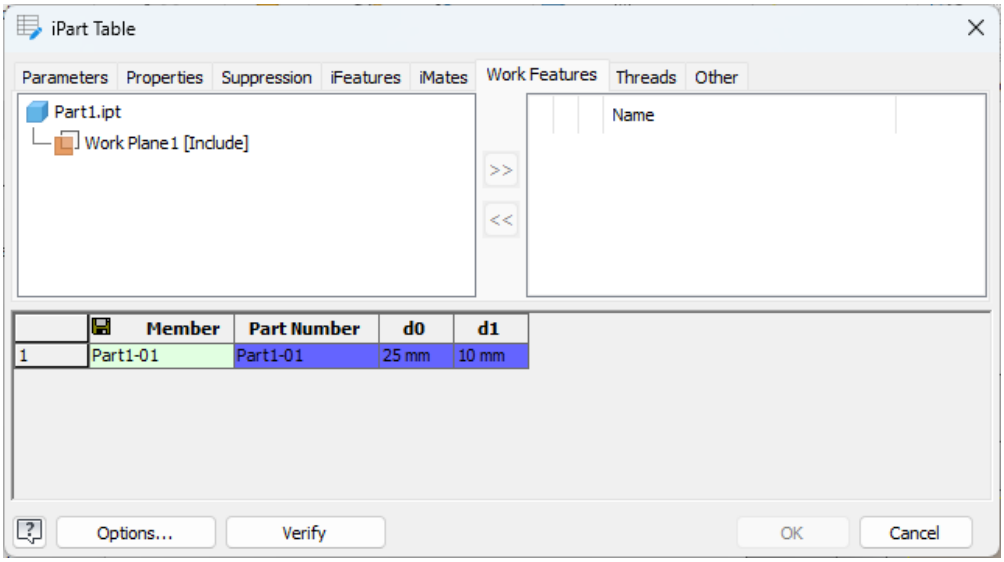


***Figure 18-10*** *The* ***Work Features*** *tab of the* ***iPart Table*** *dialog box*

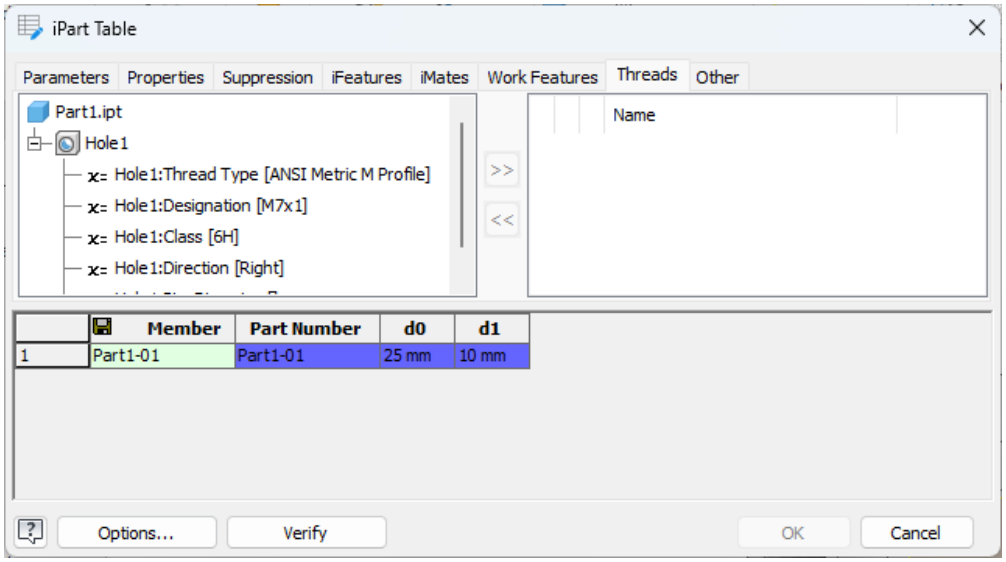


***Figure 18-11*** *The* ***Threads*** *tab of the* ***iPart Author*** *dialog box*

## Other Tab

The options in the **Other** tab (Figure 18-12) are used to add other parameters to iPart factories. Note that these parameters cannot control the size of the part created using the iPart factory.

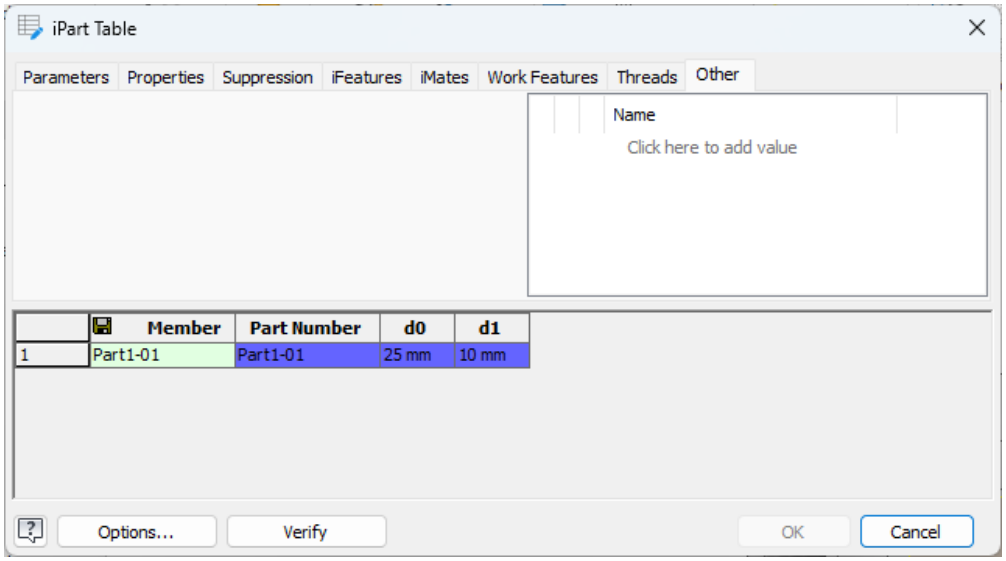


***Figure 18-12*** *The* ***Other*** *tab of the* ***iPart Author*** *dialog box*

To add the other parameter, click on **Click here to add value** and then enter the value of the other parameter in the text box that appears in the **Name** pane. You will notice that the parameter that you add in the **Name** pane is also added to the **iPart Table**. You can modify the value of the individual cells by selecting each field of the new parameter in the **iPart Table**.

After setting the options in various tabs of the **iPart Table** dialog box, choose **OK** to exit the dialog box and to save the file. The saved file will act as the iPart factory to place the parts in the assembly files.



**Note**

*When you create an iPart factory, the **Table** item is added to the **Browser Bar**. If you click on the + sign located on the left of the **Table** item in the **Browser Bar**, the tree view will expand and the parameters in the iPart factory will be displayed.*

## Procedure to Create Standard iPart

The procedure to create standard iPart is discussed next.

1. Create a component in the Part environment using the parameters.

2. Invoke the **iPart Table** dialog box by choosing the **Create iPart** tool from the **Author** panel of the **Manage** tab. By default, the **Parameters** tab is chosen in this dialog box. You can include iMates, work features, threads, and other customized properties in the part by using the tabs displayed in the **iPart Table** dialog box.

3. Select the required parameter from the left pane of the **iPart Table** dialog box and then choose the **Add (>>)** button; the selected parameter will be added to the right pane of the dialog box. Repeat the same procedure in other tabs of the **iPart Table** dialog box to add the required parameters to the right pane. You can also remove parameters from the right pane by first selecting them and then choosing the **Remove (<<)** button from the dialog box. Using different tabs in the **iPart Table** dialog box, you can control the suppression and visibility of the created features.

4. Next, assign keys to the parameters that you want to identify later. You can change the values of the parameters that have been assigned the keys. To assign a key to a parameter, click on its corresponding key in the **Key** column.

5. After assigning keys, you need to add the number of rows that is equal to the number of iParts you want to create in the **iPart Table**. Add the required number of rows in the **iPart Table** and then change the parameter value in the required parameter. Note that you need to change the parameter values of the parameters that have been assigned the keys. The size of other parameters will vary according to the expressions used in defining the parameters.

6. After adding the required number of rows in the **iPart Table**, you need to verify the table for errors. If there are errors in the table, they will be highlighted in yellow. Rectify the error, if any, found in the table.

7. Next, save the table by choosing **OK** from the **iPart Table** dialog box and then exit the part file.

## Procedure to Create Custom iPart

The procedure to create the custom iPart is similar to the procedure to create standard ipart. To create custom iPart, perform Step 1 through Step 5 from the section *Procedure of Creating*

*Standard iPart*. After adding the required number of rows in the iPart Table, right-click in the **Member** column of the **iPart Table**; a shortcut menu will be displayed. Choose the **Custom Parameter Column** option from it. Now, you need to verify the table for errors. If there are errors in the table, they will be highlighted in yellow. Click on the **Verify** button to rectify the error, if any. Now, save the table by choosing the **OK** button from the **iPart Table** dialog box and then exit the part file.

## Inserting an iPart into an Assembly

You can insert an iPart into an assembly file using the **Place** tool. The number of iParts that can be inserted into the graphics window depends upon the number of rows added to the **iPart Table**. Depending on whether you select a standard iPart factory or custom iPart factory, the dialog box for placing the part will differ. The procedure for placing both these types of iPart factories is discussed next.

### Placing Standard iParts in an Assembly

To place a part using the standard iPart factory, choose the **Place** tool from the **Component** panel of the **Assemble** tab; the **Place Component** dialog box will be displayed. Select the required standard iPart and choose the **Open** button from the **Place Component** dialog box; the **Place Standard iPart** dialog box will be displayed, refer to Figure 18-13. The options in the three tabs of this dialog box are discussed next.

#### Keys Tab

The **Keys** tab (Figure 18-13) consists of the **Predefined values** pane that displays the name and value of the parameters that were assigned the keys in the **Selected Parameters** pane of the **iPart Table** dialog box. Note that because it is a standard iPart, you cannot modify the value of any of the parameters in this dialog box. However, if more than one rows were created in the **iPart Table**, you can select the standard values from the list of available values. This list is displayed when you click on one of the values and select the **All Values** check box.

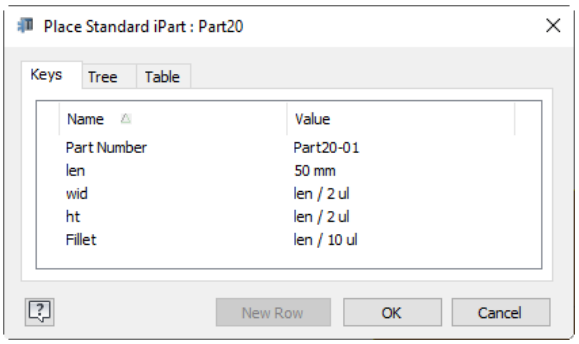


***Figure 18-13*** *The* ***Keys*** *tab of the* ***Place Standard iPart*** *dialog box*

#### Tree Tab

The **Tree** tab (Figure 18-14) displays the name and values of the parameters in the form of a tree view in the **iPart Table** dialog box. You can click on the + sign on the left of each parameter to expand the tree view.

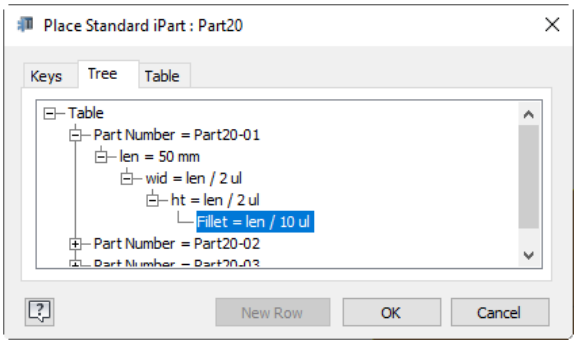


***Figure 18-14*** *The* ***Tree*** *tab of the* ***Place Standard iPart*** *dialog box*

### Table Tab

The **Table** tab (Figure 18-15) displays the iPart table created in the **iPart Table** dialog box. As mentioned earlier, each row in this table represents a part. Also, different fields in the rows can be set to different values in the **iPart Table** dialog box. As a result, you can select any row from this tab to insert the iPart. Depending on the value of the parameters defined for the selected row in the **iPart Table** dialog box, the part will be placed.

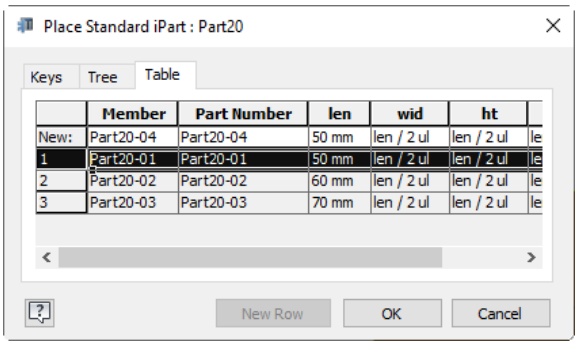


***Figure 18-15*** *The* ***Table*** *tab of the* ***Place Standard iPart*** *dialog box*

## Placing Custom iParts in an Assembly

To place a part using the custom iPart factory, invoke the **Place** tool. Next, select the custom iPart and choose the **Open** button; the **Place Custom iPart** dialog box will be displayed. The options in the three tabs of this dialog box are discussed next.

### Keys Tab

The **Keys** tab of the **Place Custom iPart** dialog box (Figure 18-16) has two panes. The pane on the left is the **Predefined values** pane and displays all the parameters that were not made custom in the **iPart Table** dialog box. Note that you cannot modify the values of the parameters available in this pane. The pane on the right is called the **Custom values** pane. It displays all the parameters that were made custom using the **iPart Table** dialog box. To modify the value of the parameter, click on the **Value** field of that parameter in the **Custom values** pane; the field will change to an edit box. Enter the new value in it. The part that will be placed using this iPart factory will have the specified value of the parameter.

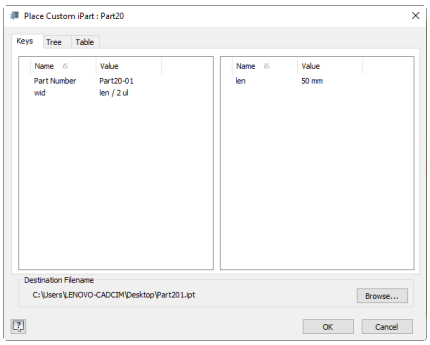


***Figure 18-16*** *The* ***Keys*** *tab of the* ***Place Custom iPart*** *dialog box*

### Tree Tab

The **Tree** tab (Figure 18-17) also has two panes. The left pane displays the name and values in the form of a tree view of the parameters that were assigned keys in the **iPart Table** dialog box. The right pane displays the parameters that were made custom using the **iPart Table** dialog box.

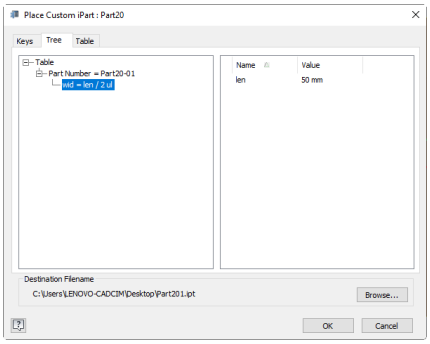


***Figure 18-17*** *The* ***Tree*** *tab of the* ***Place Custom iPart*** *dialog box*

### Table Tab

The **Table** tab of the **Place Custom iPart** dialog box (Figure 18-18) is similar to that of the **Place Standard iPart** dialog box. It displays the iPart table that was created in the **iPart Author** dialog box. You can select the table to place the part based on the values in that table.

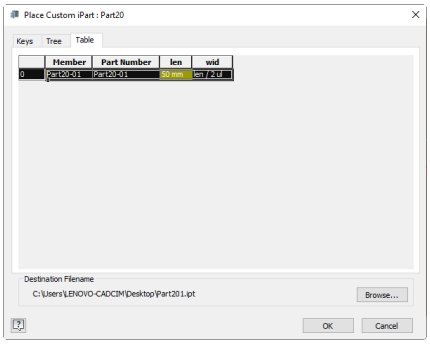


***Figure 18-18*** *The* ***Table*** *tab of the* ***Place Custom iPart*** *dialog box*

## Changing the iParts in the Assembly File

If the iPart factory used to place the iPart in the assembly file has more than one row in the iPart table, you can replace the iPart with the other iPart defined in the rows. To change the iPart, right-click on **Table** under **iPart** in the **Browser Bar**; a shortcut menu will be displayed. Choose **Change Component** from the shortcut menu; the **Place Standard iPart** dialog box or the **Place Custom iPart** dialog box will be displayed. Choose the **Table** tab and then select the row of the required iPart; the previous iPart will be replaced by the other iPart whose row you select.

# CREATING 3D SKETCHES

**Ribbon:** 3D Model > Sketch drop-down > Start 3D Sketch




In earlier chapters, you have learned to create 2D sweeps by defining path in 2D space. In this chapter, you will learn to create a 3D sketch that can be used for creating sweep features in 3D environment, as shown in Figure 18-19.

To create a 3D sketch, choose the **Start 3D Sketch** tool from the **Sketch** drop-down in the **Sketch** panel of the **3D Model** tab; the 3D sketching environment will be activated. Note that because a 3D sketch has to be created, you will not be prompted to select the sketching plane. As soon as you enter the 3D sketching environment, the **3D Sketch** tab will be activated. Some of the tools in this tab are the same as those discussed in 2D sketching. The functions of the remaining tools are discussed next.

## Line




The **Line** tool is used to create a line in the 3D space. Note that similar to drawing a line in a 2D sketch, you can create a line by specifying the points on the graphics screen. The 3D line can also be created by using work points, vertices of an existing model, or center points of a cylindrical feature or hole. You can also turn on the option of creating bends at the corners of a 3D line. By default, this option is turned off. To turn this option on, invoke the **Line** tool in the 3D sketching environment and then right-click in the drawing window to display the Marking Menu. Choose the **Auto-Bend** option. Now, when you draw a 3D line, it will automatically be bent at the corners and the bend radius will be displayed, as the value of the first instance. At the remaining instances, the value will be displayed as a function of the first value. As a result, when you modify the first value, the remaining values will be modified automatically. If you want to modify any other value, double-click on it and modify it using the **Edit Dimension** edit box. However, in this case, the modified value will no more be the function of the first value. Figure 18-20 shows a 3D line created by using the vertices of an existing model and the center points of the holes.

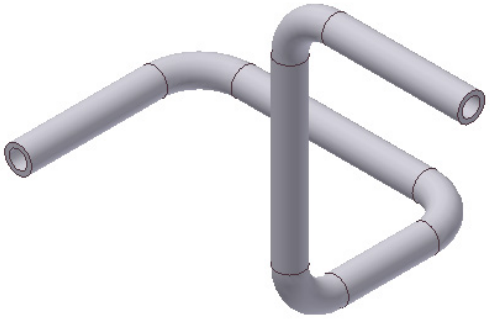

***Figure 18-19*** *Pipe created by sweeping a profile along a 3D path*

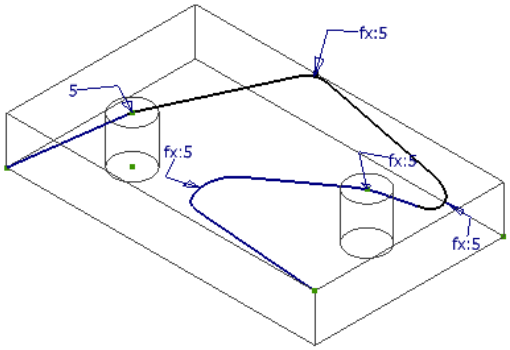


***Figure 18-20*** *3D line created using work points and vertices of a model*

## Spline



The **Spline** tool is used to create splines in the 3D sketching environment. This tool works similar to the **Spline** tool of 2D sketching environment. You can use work points, vertices of an existing feature, or center points of holes or cylindrical features for creating a 3D spline.

## Bend




The **Bend** tool is used to create bends manually at the corners of the 3D line. When you invoke this tool, the **Bend** dialog box will be displayed, as shown in Figure 18-21. You can specify the radius of the bend in this dialog box and then select the two lines that comprise of the corner where the bend will be created. Note that if a cross is displayed on placing the cursor over the lines, it suggests that the lines can not be selected for creating a bend.

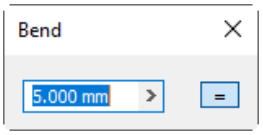


***Figure 18-21*** *The **Bend** dialog box*

## Include Geometry




The **Include Geometry** tool is used to include an existing 2D geometry in the 3D sketch. You can also select an edge of an existing model to be included in the 3D sketch. This is similar to projecting geometries or cutting edges. The only difference is that in this case, the selected entities are projected in a 3D sketching environment.

## Intersection Curve




The **Intersection Curve** tool is used to create a 3D curve using the intersection of two surfaces, work planes, or existing components. When you invoke this tool, the **3D Intersection Curve** dialog box will be displayed, as shown in Figure 18-22.

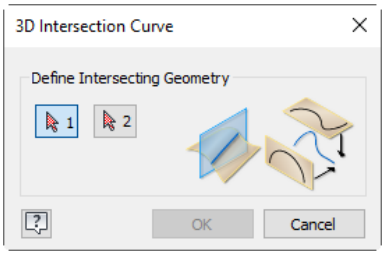


***Figure 18-22*** *The **3D Intersection Curve** dialog box*

When you invoke this dialog box, the **Select intersecting geometry** button is chosen by default. Select the first intersecting geometry; the **Select**

**geometry to be intersected** button will be chosen automatically. Now, select the other intersecting surface and then choose **OK** button; a 3D curve will be created at the intersection of the two selected geometries. Figure 18-23 shows two intersecting surfaces and Figure 18-24 shows the resultant 3D curve created using the intersecting surfaces.

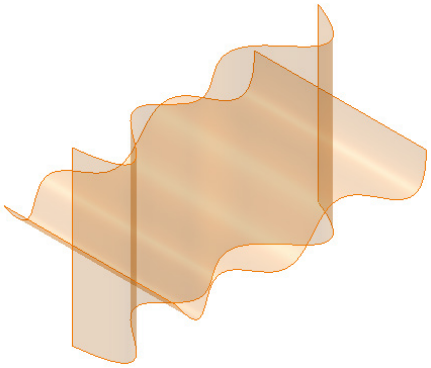

***Figure 18-23*** *Intersecting surfaces*

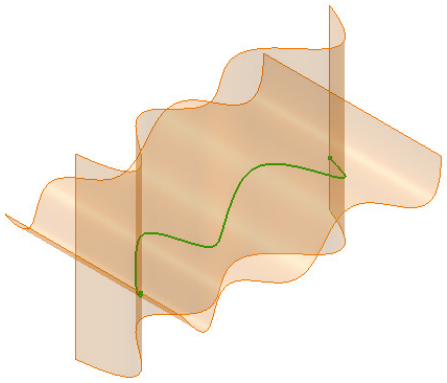

***Figure 18-24*** *3D curve created using the surfaces*

## Helical Curve




The **Helical Curve** tool allows you to create 3D helical curves that consist of a helical curve and a centerline. The dimensions of the curve are also displayed in the drawing area. To create a 3D helical curve, choose the **Helical Curve** tool from the **3D Sketch** tab; the **Helical Curve** dialog box will be displayed, as shown in Figure 18-25. Also, you will be prompted to select a start point for the helix axis. The **Inventor Precise Input** toolbar that is displayed along with the **Helical Curve** dialog box can be used to specify the start point and endpoint of the helix axis. The rest of the options that are used to create the helical curve are similar to those discussed while creating coil feature in Chapter 8. Figure 18-26 shows a helical curve along with other components displayed in the drawing area.

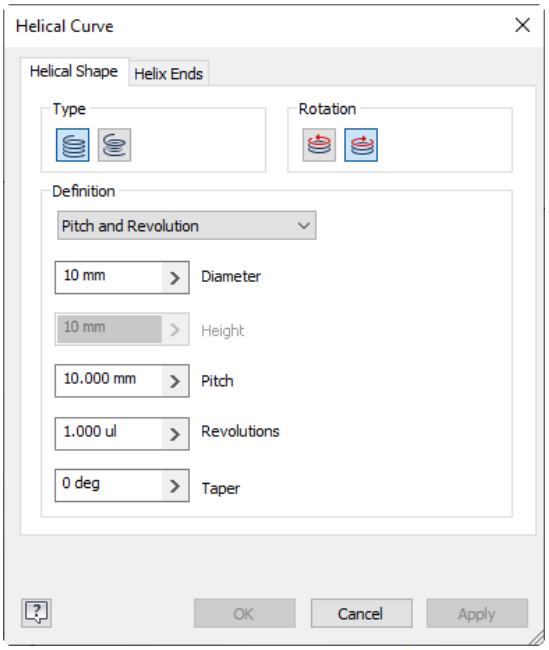


***Figure 18-25*** *The* ***Helical Curve*** *dialog box*

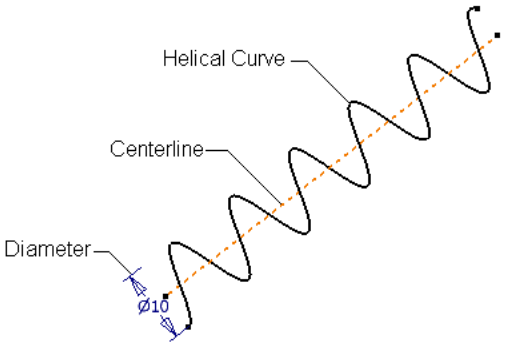


***Figure 18-26*** *Helical curve with its components*

**Note**

*The other options in this environment are similar to those discussed in the 2D Sketching environment and Part modeling environment.*

# TUTORIALS

## Tutorial 1

In this tutorial, you will create new parameters and then use them for sketching and extruding the model shown in Figure 18-27. The dimensioned sketch is shown in Figure 18-28. The sketch should be extruded upto a distance of EXT. The dimensions in the sketch should be displayed as equations, as shown in Figure 18-28. **(Expected time: 30 min)**

The numeric values of parameters are given below.

LEN = 60
WID = LEN/2
RAD = LEN/6
EXT = LEN/3

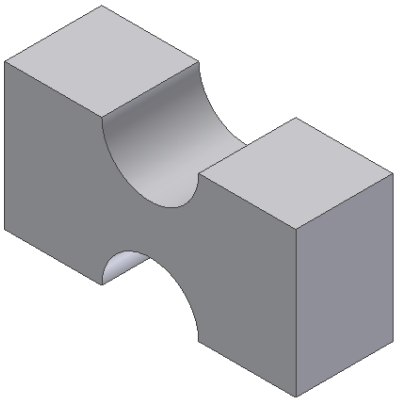

***Figure 18-27*** *Model for Tutorial 1*

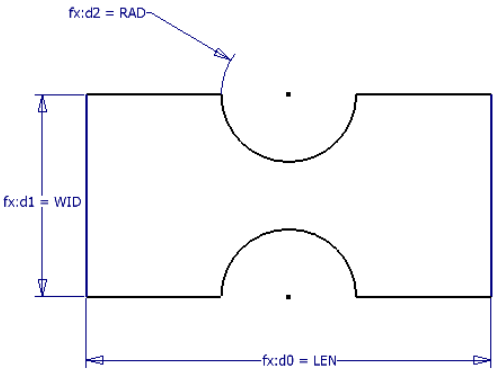


***Figure 18-28*** *Sketch for the model*

The following steps are required to complete this tutorial:

a. Start Autodesk Inventor and then start a new metric standard part file.
b. Create the sketch and add required constraints to it.
c. Invoke the **Parameters** tool and create required parameters.
d. Invoke the **Document Settings** dialog box and select the option to display the dimensions as equations.
e. Invoke the **Dimension** tool and dimension the sketch by entering parameters instead of entering values in the **Edit Dimension** edit box.
f. Exit the sketching environment and extrude the sketch. Enter the parameters instead of entering value in the extrusion distance edit box.

## Starting a New Part File

1. Start Autodesk Inventor and invoke the **Create New File** dialog box.

2. Choose the **Metric** and start a new metric part file to invoke the Modeling environment.

3. Choose the **Start 2D Sketch** tool from the **Sketch** panel of the **3D Model** tab; default planes are displayed and you are prompted to select the sketching plane.

4. Now, select the **XY** plane as the sketching plane from the graphics window.

## Drawing the Sketch

1. Draw the sketch for the model by using the sketching tools. Add required constraints to it. The sketch after adding the constraints is shown in Figure 18-29.

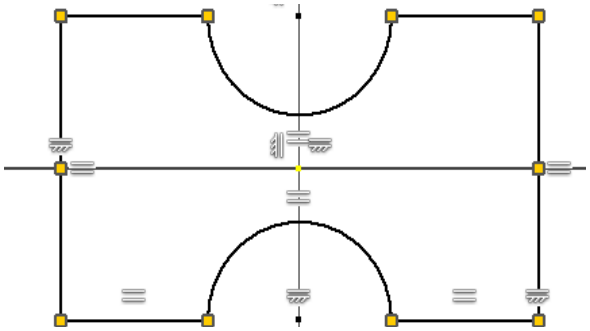

***Figure 18-29*** *Sketch after adding required constraints*

## Creating Parameters

As mentioned earlier, parameters are created by using the **Parameters** dialog box. You can invoke this dialog box by using the **Parameters** tool.

1. Choose the **Parameters** tool from the **Parameters** panel of the **Manage** tab to invoke the **Parameters** dialog box.

2. Choose the **Add Numeric** button from this dialog box to enter a new row in the **User Parameters** table. Enter the name of the parameter as **LEN** in the **Parameter Name** field and then press ENTER.

   You will notice that a new row with the name LEN is created. The unit of the parameter is mm, and the equation and value is 1. Now, you need to modify the value of the parameter.



**Note**

*Note that the parameter names are case-sensitive. Therefore, if you enter a name in uppercase characters, you need to enter the parameters in the same case while specifying them in the* ***Edit Dimension*** *edit box or in a dialog box.*

3. Click on the **Equation** field of the LEN row; it changes into an edit box. Enter **60** in this edit box and then press ENTER.

   You will notice that the values of the **Nominal Value** field and the **Model Value** field are automatically changed to 60.000000.

4. Again, choose the **Add Numeric** button to add another row to the **User Parameters** table.

5. Enter **WID** in the **Parameter Name** field.

6. Click on the **Equation** field of the WID row and enter **LEN/2** in this field. Next, press ENTER.

   You will notice that the value in the **Model Value** field has automatically changed to 30.000000. This is because the value of the LEN parameter is 60 and WID = LEN/2 = 60/2 = 30. Also, notice that **ul** has automatically been added on the right of the equation. You do not need

to enter this value while defining the equation as it is automatically added by Autodesk Inventor.

7. Similarly, create the remaining parameters. The **Parameters** dialog box after creating all the parameters is shown in Figure 18-30. Choose **Done** to exit the **Parameters** dialog box.

As you have not dimensioned the sketch until now, no row will be displayed in the **Model Parameters** table. Once you add dimensions to the sketch, the parameters will automatically be added to the **Model Parameters** table.

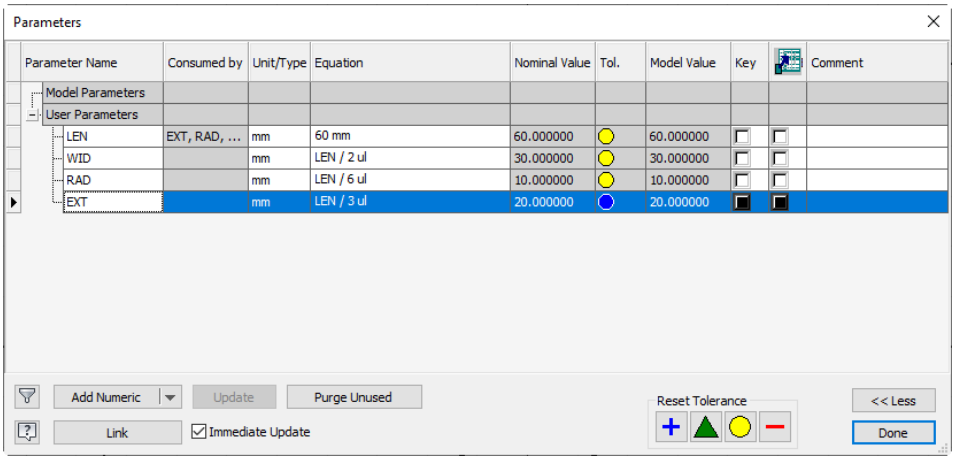


***Figure 18-30*** *The* ***Parameters*** *dialog box after adding the user-defined parameters*

## Displaying Dimensions as Equations

As mentioned in the tutorial description, you need to display dimensions as equations. Therefore, you need to select this option from the **Document Settings** dialog box.

1. Choose the **Document Settings** tool from the **Options** panel of the **Tools** tab to invoke the **Document Settings** dialog box.

2. In this dialog box, choose the **Units** tab and select the **Display as expression** radio button from the **Modeling Dimension Display** area. Next, choose **Apply** and then choose **Close** to exit the dialog box.

## Dimensioning the Sketch

Now, you need to dimension the sketch by using parameters. As mentioned earlier, parameters are case-sensitive. This means if you have specified the name of the parameter in capital letters, you need to enter the name in the **Edit Dimension** edit box in capital letters only, otherwise the **Autodesk Inventor** dialog box states you that this expression cannot be evaluated.

1. Invoke the **Dimension** tool and then select the vertical lines one by one at the two ends of the sketch. Place the dimension below the sketch; the **Edit Dimension** edit box is displayed.

2. Enter **LEN** in the **Edit Dimension** edit box and press ENTER.

   You will notice that the dimension is automatically modified and displayed as an equation on the graphics screen. This happens because you have selected the option of displaying dimensions as equations.

3. Select the left vertical line and then place the dimension on the left of the sketch; the **Edit Dimension** edit box is displayed. Enter **WID** in the **Edit Dimension** edit box and press ENTER.

4. Select the upper arc and then place the dimension on the left of the arc; the **Edit Dimension** edit box is displayed. Enter **RAD** in the **Edit Dimension** edit box and press ENTER.

   This completes the dimensioning of the sketch. The sketch after adding all the dimensions is shown in Figure 18-31. In this figure, the grid lines and axes have not been displayed for better visibility of the sketch.



**Note**

*If you do not dimension the sketch in the same sequence as mentioned above, the names of the model parameters with which the user parameters are equated will be different from those shown in Figure 18-28.*

## Extruding the Sketch

1. Exit the sketching environment and then change the current view to the isometric view.

2. Invoke the **Properties-Extrusion** dialog box and then enter **EXT** in the edit box provided in the **Distance A** edit box. Accept the remaining default options and then choose the **OK** button.

   The sketch is extruded through a distance defined by the EXT parameter. You can also specify the parameters of the extruded feature using the mini toolbar that is displayed on invoking the **Extrude** tool.

3. Save the model with the name *Tutorial1.ipt* at the location given below and then close the file.

   *C:\Inventor_2026\c18*

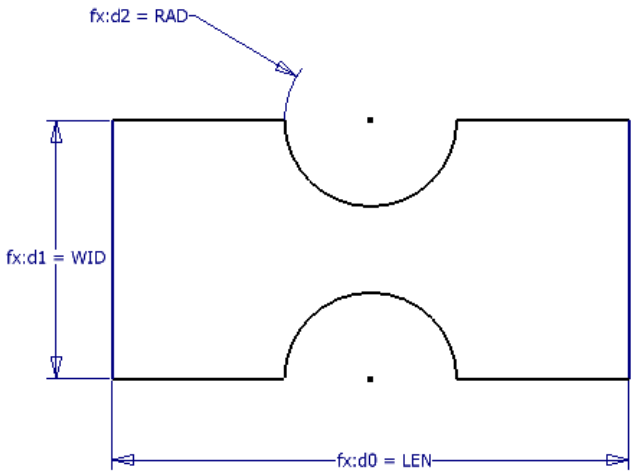


***Figure 18-31*** *Sketch displaying the dimensions as equations*

## Tutorial 2

In this tutorial, you will create an assembly of the Outer Plate and the Inner Plate shown in Figure 18-32. The dimensions of the Outer Plate are shown in Figure 18-33. Create the Inner Plate as an adaptive part such that it automatically adjusts its size to fit inside the Outer Plate. Apply the Mate constraint with an offset of 10 mm to all the outer faces of the Inner Plate and the inner faces of the groove in the Outer Plate. After assembling the components, edit the inner cavity of the Outer Plate such that the Inner Plate again automatically adjusts its size.

**(Expected time: 1 hr)**



**Note**

*As the Inner Plate has to be an adaptive part, its dimensions are not required.*

The following steps are required to complete this tutorial:

a. Start a new metric assembly file and then create the Outer Plate.
b. Invoke the **Create** tool and then select the top face of the Outer Plate as the sketching plane for the Inner Plate.
c. Make the sketch of the Inner Plate adaptive and then set the parameters in the **Assembly** tab of the **Options** dialog box.
d. Sketch the Inner Plate and then extrude it up to the bottom face of the Outer Plate.
e. Save the model and then exit the Part environment.
f. Add the **Mate** constraint between all inner faces of the groove in the Outer Plate and the outer faces of the Inner Plate. The size of the Inner Plate automatically changes in order to adjust inside the Outer Plate.

g. Modify the dimensions of the inner cavity of the Outer Plate. The size of the Inner Plate again changes automatically to retain the design intent.

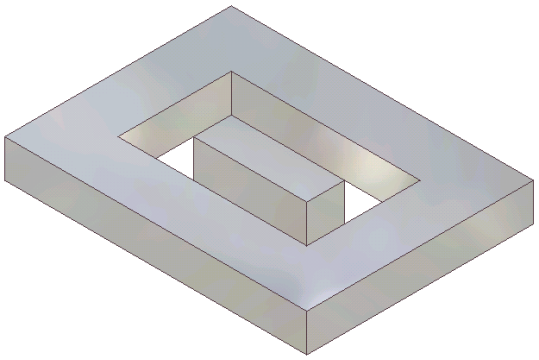

***Figure 18-32*** *Assembly for Tutorial 2*

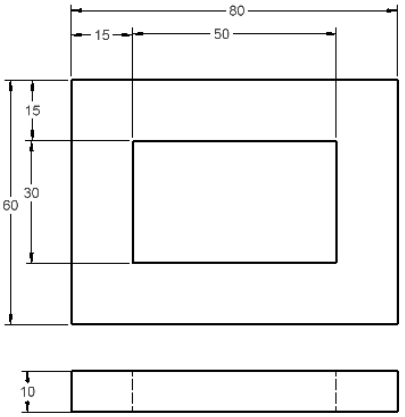


***Figure 18-33*** *Dimensions of the Outer Plate*

## Creating the Outer Plate

You can directly create the Outer Plate and the Inner Plate in the assembly file. Before creating the Outer Plate, you need to change the measurement unit to mm.

1. Start a new metric standard assembly file. Next, choose the **Create** tool from the **Component** panel of the **Assemble** tab; the **Create In-Place Component** dialog box is displayed. Enter **Outer Plate** as the name of the component in the **New Component Name** edit box in this dialog box. Next, choose the **OK** button.

2. Choose the **Start 2D Sketch** tool from the **Sketch** panel of the **3D Model** tab; the default planes are displayed and you are prompted to select the sketching plane.

3. Choose the **Document Settings** button from the **Options** panel of the **Tools** tab; the **Document Settings** dialog box is displayed. Choose the **Units** tab and then select **millimeters** from the **Length** drop-down list in the **Units** area of this dialog box. Next, choose **Apply** and then close the dialog box.

4. Create the Outer Plate on the top plane. After creating the Outer Plate, return to the assembly file. The assembly file after creating the Outer Plate is shown in Figure 18-34. For dimensions, refer to Figure 18-33.

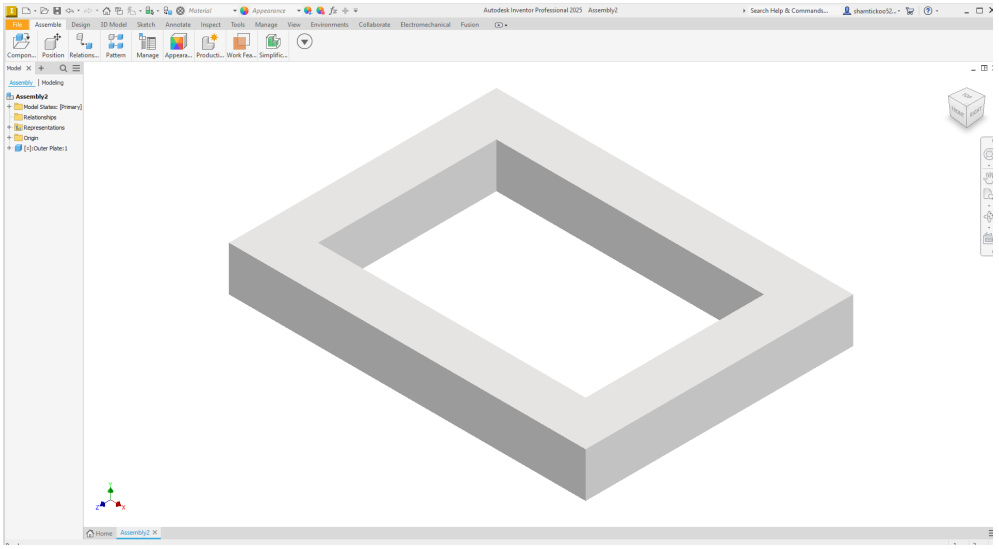

***Figure 18-34*** *Assembly after creating the Outer Plate*

## Creating the Inner Plate

You will sketch the Inner Plate by selecting the top face of the Outer Plate as the sketching plane. Note that the sketch plane should be constrained to the selected face.

1. Invoke the **Create** tool from the **Component** plane of the **Assemble** tab. Make sure that the **Constrain sketch plane to selected face or plane** check box is selected in the **Create In-Place Component** dialog box.

2. Enter **Inner Plate** as the name of the component in the **New Component Name** edit box in the **Create In-Place Component** dialog box. Choose **OK** from this dialog box and then select the top face of the Outer Plate.

3. Invoke the sketching environment by selecting the top face of the Outer Plate as the sketching plane.

4. Right-click on **Sketch1** in the **Browser Bar** and then choose **Adaptive** from the shortcut menu displayed; the Inner Plate becomes adaptive and its size gets adjusted automatically based on the surrounding

5. Choose the **Application Options** tool from the **Options** panel of the **Tools** tab to display the **Application Options** dialog box. Choose the **Assembly** tab from this dialog box to display the options in this tab.

6. Select all the check boxes in the **In-place features** area to make the model adaptive. As a result, on extruding the model up to the bottom face of the Inner Plate, the new part is modified automatically.

7. Choose **Apply** and then choose **Close** from the **Application Options** dialog box. Next, draw the sketch for the Inner Plate and then extrude it up to the bottom face of the Outer Plate. Save the part file and then exit the part modeling environment.

   You do not need to add dimensions to the Inner Plate as it is an adaptive part. The assembly after creating the Inner Plate is shown in Figure 18-35.

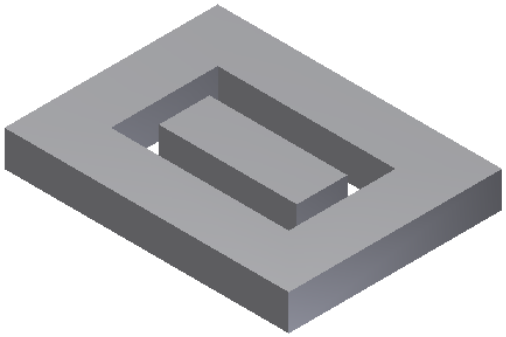

***Figure 18-35*** *Assembly after creating the Inner Plate*

8. Now, apply the Mate constraint with an offset value of 10 mm between the selected faces as shown in Figure 18-36; the Inner Plate shifts toward right.

9. Change the display type of both plates to **Wireframe** and then apply the Mate constraint with an offset of 10 mm between the selected faces, as shown in Figure 18-37; the Inner Plate gets shifted.

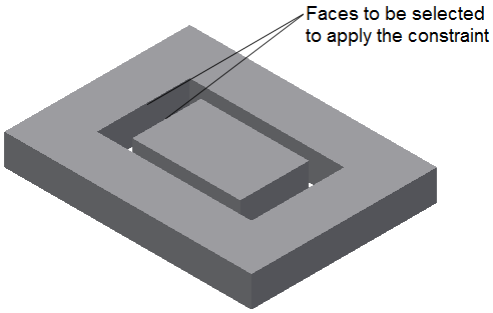


***Figure 18-36*** *Faces selected to apply the Mate constraint*

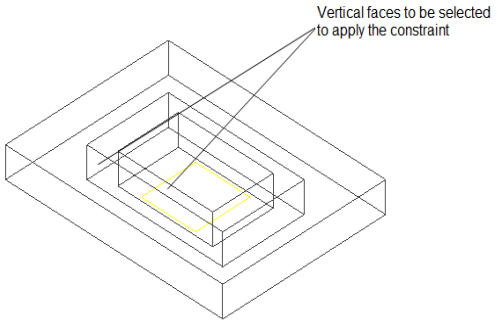


***Figure 18-37*** *Faces selected to apply the Mate constraint*

10. Now, change the display type of both the plates to **Shaded** and apply the Mate constraint with an offset value of 10 mm between the selected faces, as shown in Figure 18-38. Also, you will see that the size of the Inner Plate is reduced in order to fit inside the cavity of the Outer Plate. This is because of the adaptive property of the Inner Plate.

11. Similarly, apply the Mate constraint with an offset value of 10 mm between the selected faces, as shown in Figure 18-39.

    Notice the size of the Inner Plate. It has further reduced in order to fit inside the cavity of the Outer Plate.

12. Close the **Place Constraint** dialog box. The assembly after applying the constraints is shown in Figure 18-40. Notice the change in the size of the Inner Plate.

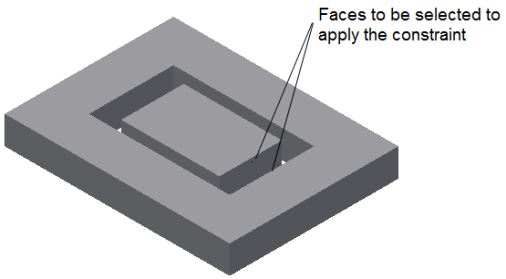


***Figure 18-38*** *Faces selected to apply the Mate constraint*

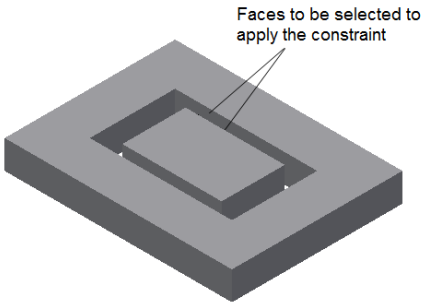


***Figure 18-39*** *Faces selected to apply the Mate constraint*

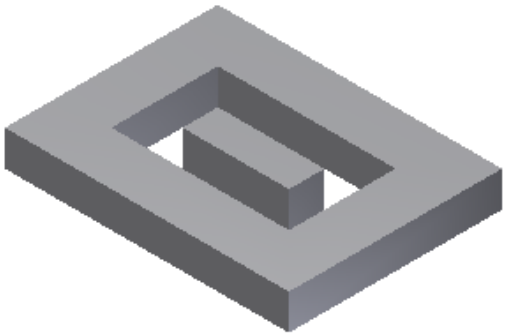

***Figure 18-40*** *Assembly after applying the constraints*

## Modifying Dimensions of the Cavity of the Outer Plate

You can edit the dimensions of the cavity of the Outer Plate in the assembly file. Since the Inner Plate is an adaptive part, its dimensions will automatically change when the dimensions of the cavity are modified.

1. Double-click on **Outer Plate:1** in the **Browser Bar** to activate this component.

2. Modify the dimensions of the cavity, as shown in Figure 18-41.

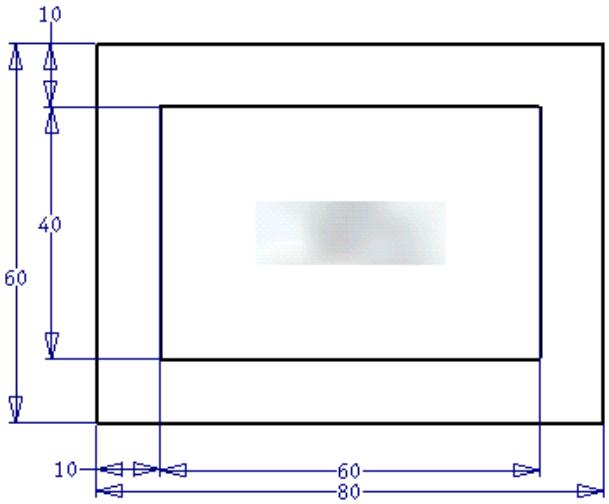


***Figure 18-41*** *Modified dimensions of the cavity*

3. Choose **Return** from the **Quick Access Toolbar** to exit the sketching environment. You may need to add the **Return** tool to the **Quick Access Toolbar** if it is not displayed by default.

4. Again, choose **Return** from the **Quick Access Toolbar** to exit the part modeling environment. Next, change the current view to the isometric view.

   On doing so, you will notice that the dimensions of the Inner Plate are modified in order to retain the design intent of the assembly. The assembly after modifying the dimensions of the cavity is shown in Figure 18-42. Notice the change in the dimensions of the Inner Plate.

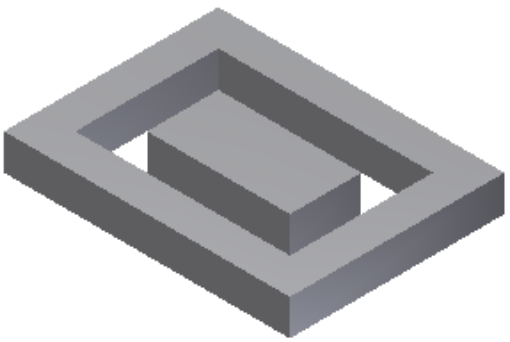

***Figure 18-42*** *Modified assembly*

5. Choose the **Save** button from the **Quick Access Toolbar**; the **Save As** dialog box is displayed. Browse to the *C:\Inventor_2026\c18* location and then enter **Tutorial2** as the file name in the **File name** edit box.

6. Choose the **Save** button from this dialog box; the **Save** message dialog box is displayed. Choose **Yes to All** from this dialog box to save the individual part files that you have created in the assembly environment. Next, choose **OK** to save the file.

## Tutorial 3

In this tutorial, you will create a Pipe in 3D space, as shown in Figure 18-43a. The views and the dimensions of the model are given in Figure 18-43b.

**(Expected time: 30 min)**

The following steps are required to complete this tutorial:

a. Create a 2D sketch consisting of three lines on the XZ plane and then exit the sketching environment.
b. Define a new work plane normal to the existing sketch and then create the second 2D sketch on this new work plane. The start point of the first line in the second sketch should be the endpoint of the right vertical line in the first sketch.
c. Invoke the 3D sketching environment and then select all lines to be included in the 3D sketch using the **Include Geometry** tool.
d. Add bends at all the corners and then exit the 3D sketching environment.
e. Define a new work plane at the start point of the path and then sketch the profile of the pipe. Take the reference of the start point of the first line for drawing the sketch.
f. Exit the sketching environment and sweep the sketch along the 3D path.

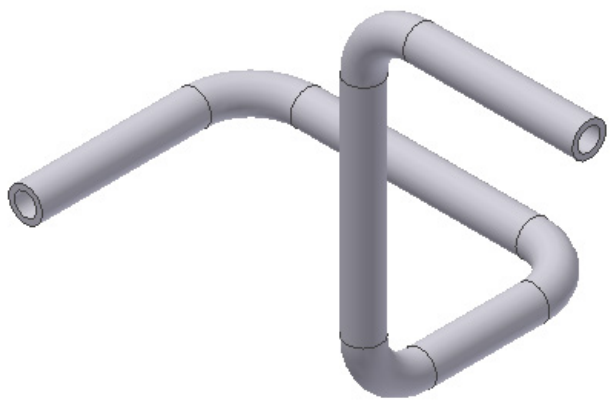

***Figure 18-43a*** *Pipe for Tutorial 3*

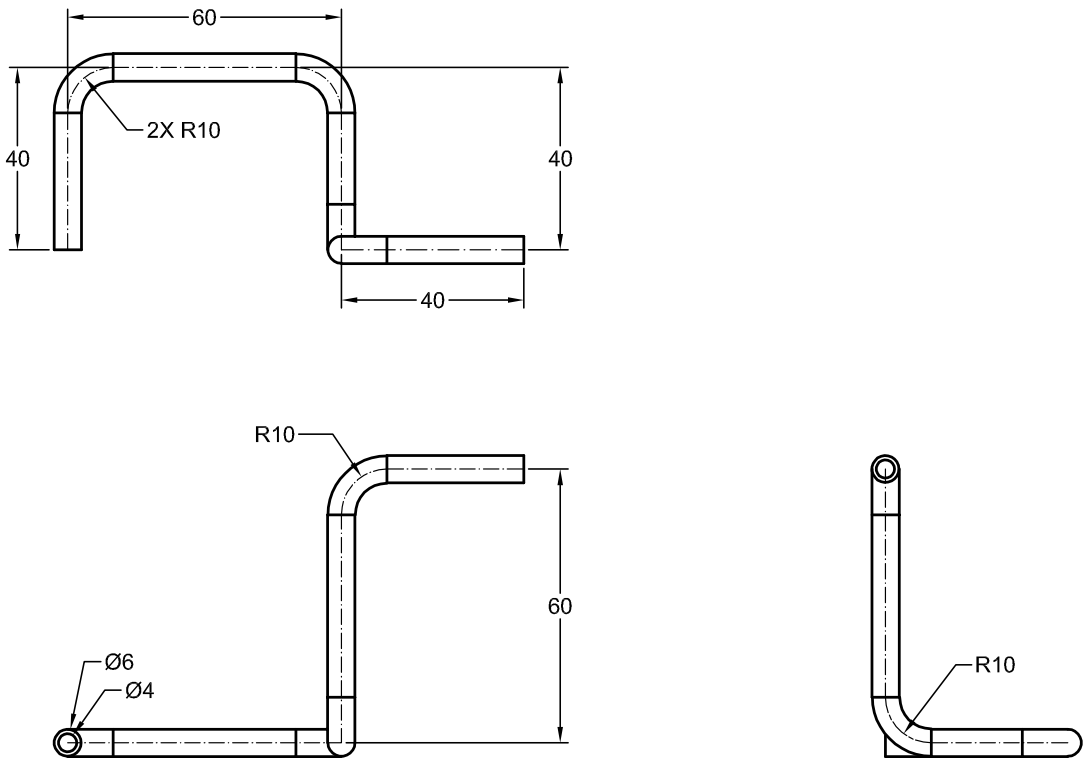


***Figure 18-43b*** *Pipe for Tutorial 3*

## Drawing the First 2D Sketch

1. Invoke the **Create New File** dialog box and then choose the **Metric** tab from it.

2. Start a new part file.

3. Choose the **Start 2D Sketch** tool from the **Sketch** panel of the **3D Model** tab; the default planes are displayed and you are prompted to select the sketching plane.

4. Draw the first sketch on the XZ plane, as shown in Figure 18-44.

5. Exit the sketching environment by choosing the **Finish Sketch** button.

## Drawing the Second 2D Sketch

You need to create the second 2D sketch on a work plane that is normal to the third line of the first 2D sketch. Therefore, first you need to define a new work plane normal to the third line of the sketch.

1. Define a new work plane normal to the right vertical line in the sketch and then select it as the sketching plane for drawing the next 2D sketch.

2. Draw the next sketch starting from the origin of the sketch plane. The origin of the sketch plane is the endpoint of the right vertical line of the first sketch, see Figure 18-45.

   To ensure that the start point of the line is at the origin, you need to project the third line of the sketch. On doing so, the line will be projected as a point that will be placed at the origin. Now, apply the Coincident constraint between the endpoint of the line and the projected point.

3. Exit the sketching environment and turn off the display of the work plane. First and second 2D sketches are shown in Figure 18-45.

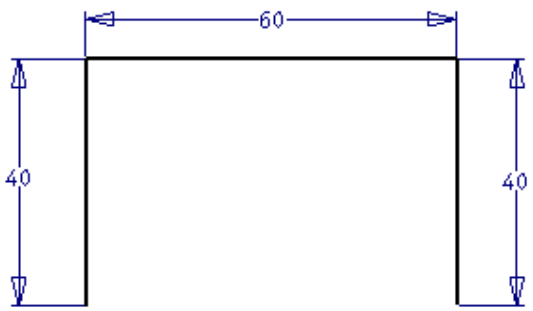


***Figure 18-44*** *First 2D sketch*

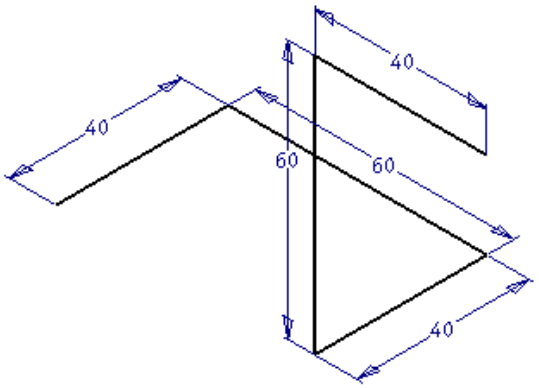


***Figure 18-45*** *First and second 2D sketches*

## Creating the 3D Sketch

1. Choose the **Start 3D Sketch** tool from **3D Model > Sketch > Sketch** drop-down to invoke the 3D Sketching environment.




2. Choose the **Include Geometry** tool from the **Draw** panel of the **3D Sketch** tab.




3. Select one by one all the lines in the first 2D sketch and the second 2D sketch.

4. Choose the **Bend** tool from the **Draw** panel of the **3D Sketch** tab to display the **Bend** dialog box. Enter **10** in the **Radius** edit box and then select all the lines that form the corners of the 3D sketch.

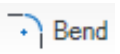


   You will notice that a fillet kind of bend is created at all the corners of the 3D sketch and the dimension is displayed on all the bends.

5. Exit the 3D sketching environment.

6. Now, turn off the visibility of the two 2D sketches using the **Browser Bar**. The 3D sketch after turning off the visibility of the 2D sketches is shown in Figure 18-46.

**Note**

*If you are not able to fillet the vertex at the intersection of the first and second 2D sketches, it implies that the endpoint of the first 2D sketch is not coincident with that of the second 2D sketch. In other words, the start point of the first line of the second 2D sketch is not at the origin. Therefore, you need to edit the second 2D sketch and move it to the origin.*

## Creating the Profile for the Sweep Feature

To create the profile for the sweep feature, you need to define a new work plane at the start point of the first 2D sketch. Next, you need to select this work plane as the new sketching plane and draw the sketch of the profile.

1. Define a new work plane at the start point of the 3D path from where the first 2D sketch was started. Select this work plane as the new sketching plane.

2. Draw the 2D sketch of the profile of the sweep feature. The sketch of the profile consists of two concentric circles. The center of the circles should be at the start point of the first line of the 3D path. Specify 6 mm as the diameter of the outer circle and 4 mm as the diameter of the inner circle.

3. Exit the sketching environment.

## Sweeping the Profile along the 3D Path

1. Invoke the **Properties-Sweep** dialog box and select the area between the two circles as the profile of the sweep feature; the area between the two circles turns blue and the selected sketch of the profile gets displayed in the **Profiles** display box.

2. Click on the **Path** display box in the **Properties-Sweep** dialog box and select the 3D path as the path of the sweep feature; the complete 3D path turns blue.

3. Choose **OK** to close the **Properties-Sweep** dialog box. The final pipe for Tutorial 3 is shown in Figure 18-47.

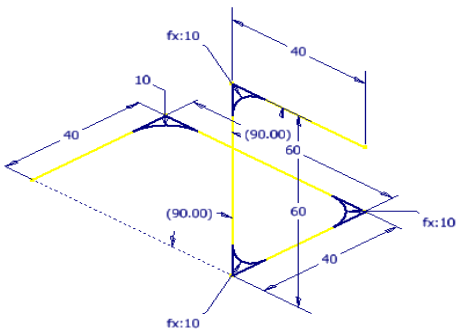


***Figure 18-46*** *3D Sketch after turning off the visibility of the 2D sketches*

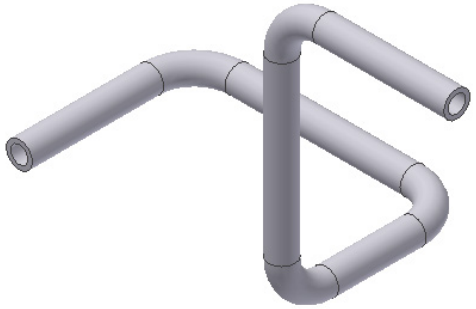

***Figure 18-47*** *Pipe for Tutorial 3*

4. Now, turn off the visibility of work plane 2 by using the **Browser Bar.**

5. Save this model with the name *Tutorial3* at the location *C:\Inventor_2026\c18*.

## Tutorial 4

In this tutorial, you will open the model saved in Tutorial 1 and add another parameter to it with the name FILLET, where FILLET = LEN/10. Using this parameter, you will fillet the model. Figure 18-48 shows the final filleted model. Next, you will change this model into a custom iPart factory. Make the LEN and FILLET as custom variables, and then suppress the FILLET variable. Finally, place the two iParts in an assembly file using the custom iPart factory that you created. The details of the two iParts that you need to place in the assembly are given below.

**(Expected time: 30 min)**

**iPart 1**
Value of LEN = 60
Suppress the fillet in the model

**iPart 2**
Value of LEN = 100

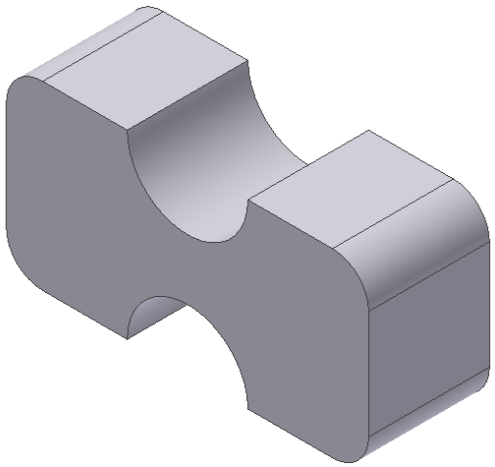

***Figure 18-48*** *Model after filleting the edges using the FILLET parameter*

The following steps are required to complete this tutorial:

a. Open the *Tutorial1.ipt* file and save it with the name *Tutorial4.ipt*.
b. Create a new user-defined parameter, FILLET in the part. The value of this parameter is LEN/10.
c. Fillet the model using the FILLET parameter.
d. Invoke the **iPart Author** dialog box and make the LEN parameter custom.
e. Add one more row to the iPart table. Change the value of the LEN parameter to 100.
f. Invoke the **Suppression** tab and suppress the FILLET variable.
g. Make the FILLET variable custom.
h. Save the file and then open a new assembly file.
i. Place iParts in an assembly file using the custom iPart factory created earlier.

## Opening the Tutorial 1 File

1. Open the *Tutorial1.ipt* file created earlier in this chapter.

2. Next, save it with the name *Tutorial4.ipt*.

## Adding a User-defined Parameter

You need to add a User-defined Parameter to the current file. This parameter will be used to fillet the model.

1. Choose the **Parameters** tool from the **Parameters** panel of the **Manage** tab to invoke the **Parameters** dialog box.




2. Choose the **Add Numeric** button to enter a new row in the **User Parameters** table. Enter **FILLET** in the **Parameter Name** field and then press ENTER.

   Notice that a new row of the user-defined parameter is added. At this stage, the value of this parameter is **1.00** mm in the **Equation** column. Now, you need to equate this parameter in terms of the LEN parameter.

3. Click on the **Equation** field in the FILLET row; an edit box replaces the field.

4. Enter **LEN/10** in the edit box and then press ENTER. You will notice that the value of this parameter automatically changes to 6.000000 in the **Nominal Value** and **Model Value** edit boxes.

5. Choose the **Done** button to exit the **Parameters** dialog box.

## Adding a Fillet to the Model Using the FILLET Parameter

1. Choose the **Fillet** tool from the **Modify** panel of the **3D Model** tab to invoke the **Fillet** dialog box.

2. Select the four edges to be filleted from the model.

3. Enter **FILLET** in the **Radius** field of the **Constant** tab in the **Fillet** dialog box.

   Note that when you enter values in terms of parameters, you need to delete **mm** from the edit boxes.

4. Choose **OK**; the fillet is added to the model and the model looks similar to the one shown in Figure 18-49.

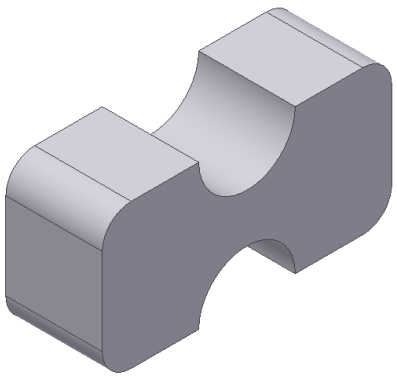

***Figure 18-49*** *Rotated view of filleted model*

## Creating the Custom iPart Factory

Next, you need to create the custom iPart factory. You will create it by customizing the LEN parameter and suppressing the fillet feature.

1. Choose the **Create iPart** tool from the **Author** panel of the **Manage** tab; the **iPart Author** dialog box is displayed with the **Parameters** tab chosen.

   You will notice that all the user-defined parameters are displayed on the **Selected Parameters** pane. You will also notice that only one row is available in the iPart table. This row has default values for the variables.

2. Right-click on the LEN variable in the **iPart Table**; a shortcut menu is displayed. Choose **Custom Parameter Column** from the shortcut menu.

   You will notice that the **LEN** column in the **iPart Table** turns blue and the key on the left of this parameter in the **Selected Parameters** pane is removed.

3. Click on the key corresponding to the WID parameter; a key with numeric value **1** is assigned to the WID parameter.

4. Choose the **Suppression** tab and then select **Fillet1** from the **Model Features** pane. Choose the **Add** button (**>>**) to add this feature to the **Selected Features** pane.

5. Next, right-click on **Fillet1** in the **iPart Table**, and then choose **Custom Parameter Column** from the shortcut menu; this feature is made custom. Now, you can suppress or compute it while inserting iParts using this iPart factory. Choose the **OK** button from the **iPart Author** dialog box to create the iPart factory. Now, you can save it and use it to place iParts.

6. Choose the **Save** button from the **Quick Access Toolbar** and then close this file.

## Placing iParts Using the Custom iPart Factory

Generally, iParts are placed in the assembly files. Therefore, you need to start a new assembly file to place iParts in it.

1. Start a new assembly file and then invoke the **Place** tool from the **Component** panel of the **Assemble** tab; the **Place Component** dialog box is displayed.

2. Select the *Tutorial4.ipt* file from this dialog box to place the iPart and then choose the **Open** button; the **Place Custom iPart** dialog box is displayed.

   The **Predefined values** pane shows only the WID parameter because only this parameter was assigned the key. On the other hand, the **Custom values** pane shows the LEN parameter and the **Fillet1** feature. As a result, you can modify the value of the LEN parameter and suppress or compute the **Fillet1** feature.

3. Click on the **Value** field of the **Fillet1** feature in the Custom values pane; an edit box replaces the field.

4. Select **Suppress** from this drop-down list. Next, click anywhere on the screen to place the component.

5. Choose **OK** to close the dialog box.

Notice that an iPart is placed in the assembly file and the fillet in this part is suppressed.



**Tip**

*If you want to unsuppress fillet in the iPart placed in the current assembly file, click on the ▷ sign located on the left of the part in the* ***Browser Bar****; the tree view expands, and* ***Table*** *and* ***Origin*** *appear in the* ***Browser Bar****. Next, right-click on the* ***Table****, and then choose* ***Change Component*** *from the shortcut menu; the* ***Place Custom iPart*** *dialog box will be displayed. Change* ***Suppress*** *to* ***Compute*** *in the* ***Value*** *field of* ***Fillet1****. Choose* ***OK*** *to exit the dialog box; the fillet will be computed and then shown in the model.*

6. Next, you need to place another iPart with a different value in the assembly. Invoke the **Place** tool to display the **Place Component** dialog box.

7. Next, select the *Tutorial4.ipt* in this dialog box to place the iPart and choose the **Open** button from it; the **Place Custom iPart** dialog box is displayed. Click on the **Value** field of the **LEN** parameter; the field changes into an edit box.

8. Enter **100** in this edit box and then click anywhere on the graphics screen. Next, right-click, and then choose **OK** from the shortcut menu displayed; the component is placed and the dialog box is closed.

9. Next, save the file.

You can now use these components to create an assembly.

## Tutorial 5

In this tutorial, you will use the hybrid surface-solid modeling to create the model shown in Figure 18-50. Figure 18-51 shows the dimensions of this model.

**(Expected time: 45 min)**

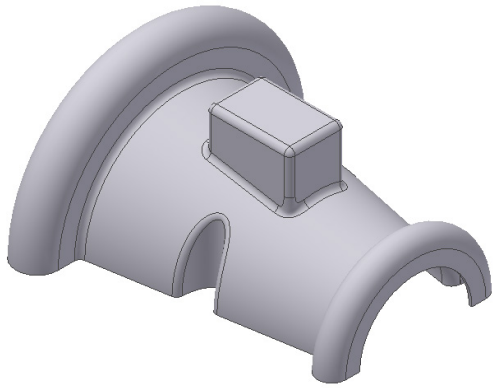

***Figure 18-50*** *Model for Tutorial 5*

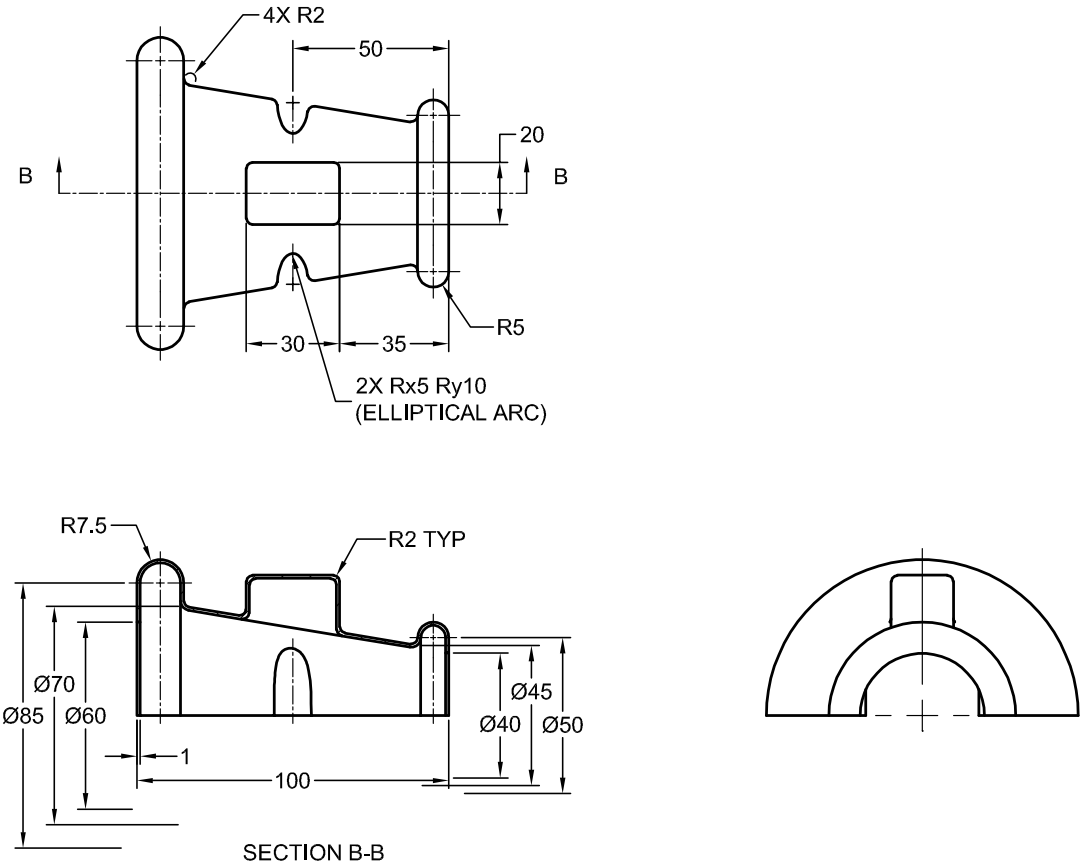


***Figure 18-51*** *Views and dimensions of the model*

The following steps are required to complete this tutorial:

a. Open a new part file and then create the sketch on the default XZ plane.
b. Revolve this sketch through an angle of 180-degree so that the final output is a surface.
c. Create two extruded surfaces.
d. Split surfaces using the **Face Split** option.
e. Delete faces using the **Delete Face** tool.
f. Define a new work plane at an offset distance of 45 mm and then create the sketch.
g. Split the base surface using the last sketch, and then delete the face.
h. Create a 3D sketch on the deleted face and then share the sketch that was used in splitting the base surface. Create a lofted surface using the shared sketch and the 3D sketch.
i. Create a boundary patch to close the top face of the lofted surface.
j. Stitch all surfaces together and fillet all sharp edges.
k. Thicken the surface using the **Thicken/Offset** tool.

## Creating the Base Surface

You will create the base surface using the sketch drawn on the XZ plane. Next, you will revolve this sketch by an angle of 180 degrees.

1. Open a new metric standard part file and then choose the **Start 2D Sketch** tool from the **Sketch** panel of the **3D Model** tab; the default planes are displayed and you are prompted to select the sketching plane.

2. Draw the sketch on the XZ plane, as shown in Figure 18-52. Constrain the sketch fully by specifying dimensions and geometric constraints.

3. Exit the sketching environment and then invoke the **Revolve** tool from the **Create** panel of the **3D Model** tab; the **Properties-Revolution** dialog box will be displayed.

   Select the sketch from the drawing area if not already selected; you are prompted to select the axis.

4. Select the centerline as the axis of revolution; preview of the resultant surface is displayed.

5. Enter **180** in the **Angle** edit box in the **Behavior** node. Next, choose **OK**; the base surface is created, as shown in Figure 18-53.

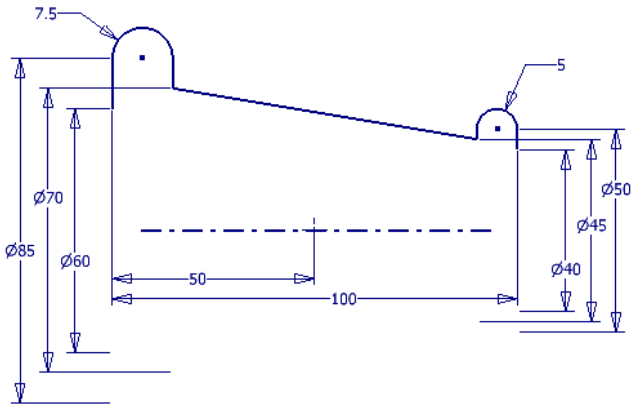


***Figure 18-52*** *Fully constrained sketch for the base surface*

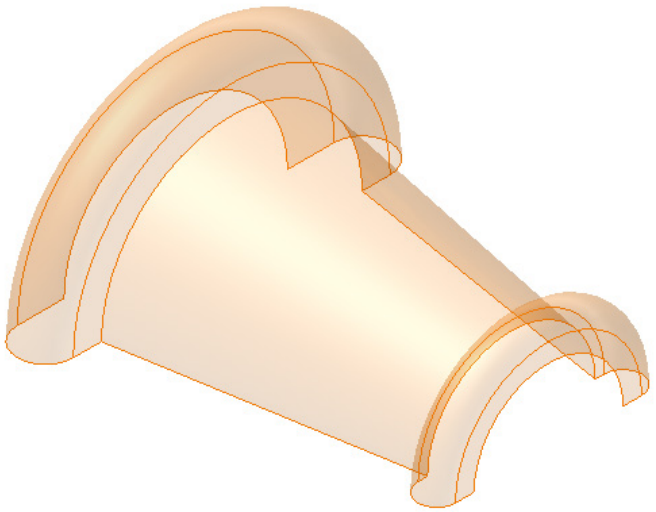

***Figure 18-53*** *Base surface*

## Creating Side Surfaces

You need to create two cuts on both sides of the base surface by splitting the base surface using the two surfaces at sides. Therefore, first you need to create side surfaces.

1. Define a new sketch plane on the XZ plane and then create an ellipse, as shown in Figure 18-54. Note that the center point of the ellipse should be coincident with the edge of the base surface.

   Next, you need to extrude the ellipse to create the surface.

2. Exit the sketching environment and then extrude the ellipse as a surface through a distance of 30 mm.

3. Choose the **Mirror** tool from the **Pattern** panel of the **3D Model** tab; the **Mirror** dialog box is displayed and you are prompted to select a feature to pattern.

4. Select the extruded elliptical surface and then select **XY Plane** as the mirror plane. Next, choose **OK** from the **Mirror** dialog box; the feature is mirrored, as shown in Figure 18-55.

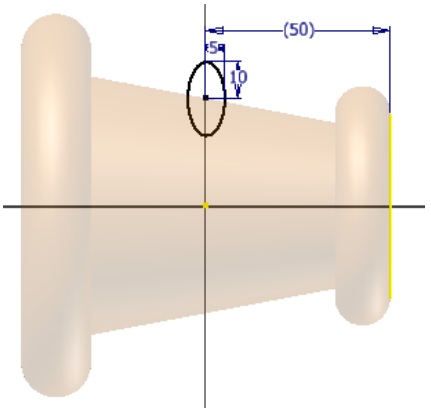


***Figure 18-54*** *Ellipse created on the XY plane*

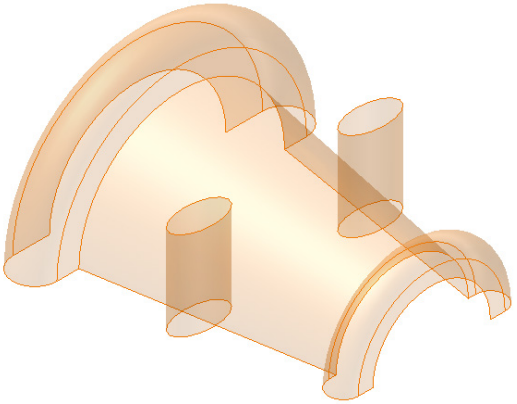

***Figure 18-55*** *Model after creating the mirror feature*

## Creating Cuts on Sides by Using Side Surfaces

To create cuts on the sides, first you will use the two side surfaces to split the base surface. Next, you will use the base surface to split the side surfaces. Finally, all the unwanted surfaces will be deleted using the **Trim** tool.

1. Invoke the **Trim Surface** tool from the **Surface** panel of the **3D Model** tab and select one of the extruded elliptical surfaces as the cutting tool.

2. Select the portion common between the base surface and the extruded surface as the portion to be trimmed, as shown in Figure 18-56. Choose **OK** from the dialog box.

3. Trim the revolved base surface using the second extruded surface as the cutting tool.

4. Using the base surface as the cutting tool, trim the remaining portion of the extruded surface on the left of the base surface, as shown in Figure 18-57.

5. Trim the other extruded elliptical surface using the base surface as the trim tool. Note that you need to select the outer portion of the extruded surface to trim, as shown in Figure 18-58.

The model after trimming all the unwanted surfaces is shown in Figure 18-59.

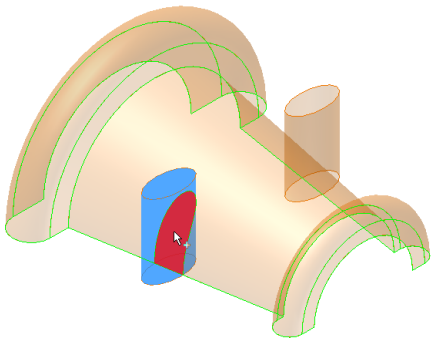

***Figure 18-56*** *Trimming the base surface*

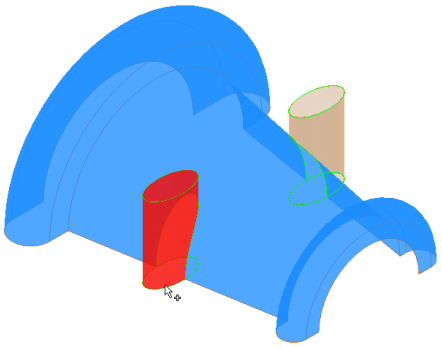

***Figure 18-57*** *Trimming one of the extruded surfaces*

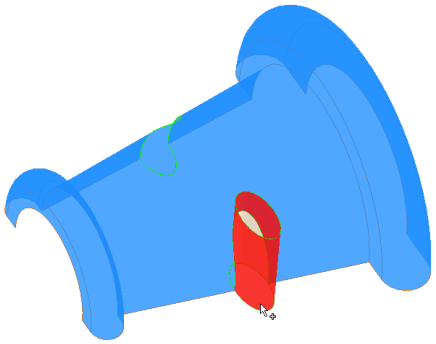

***Figure 18-58*** *Trimming the other extruded surface*

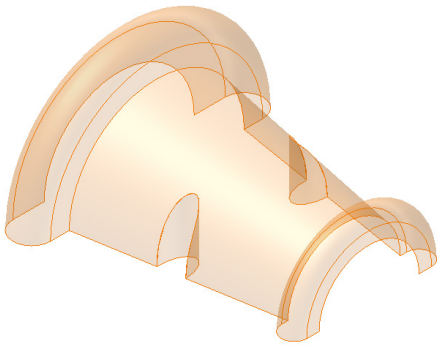

***Figure 18-59*** *Model after trimming unwanted surfaces*

## Creating the Lofted Surface

Next, you need to create the lofted surface. To create this surface, you need to create a work plane at an offset from the XZ plane.

1. Create a new work plane at an offset distance of 45 mm above the XZ plane.

2. Select this plane as the sketching plane and draw the sketch, as shown in Figure 18-60.

3. Exit the sketching environment and invoke the **Split** tool from the **Modify** panel of the **3D Model** tab.

4. Select the sketch as the split tool and select the base surface as the face to be split.

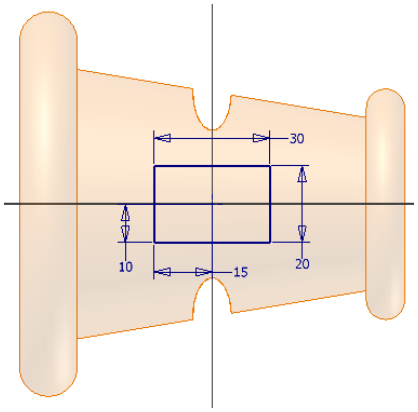


***Figure 18-60*** *Sketch drawn on the offset plane*

5. Choose the **OK** button from the **Split** dialog box; the base surface is split using the sketch.

6. Delete the split surface from the base surface using the **Delete Face** tool. The model after deleting the split surface is shown in Figure 18-61.

   Next, you will create a 3D sketch using the edges of the surface that are removed from the base surface.

7. Invoke the 3D sketching environment and then choose the **Include Geometry** tool from the **Draw** panel of the **3D Sketch** tab.

8. Select the four edges that resulted from the split surface which was removed from the base surface, see Figure 18-62.

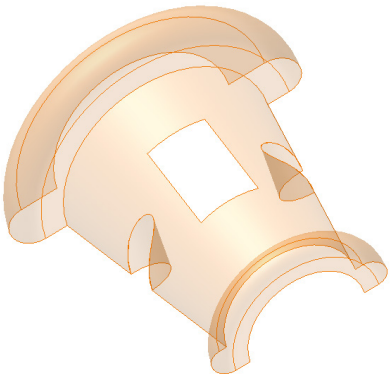

***Figure 18-61*** *Model after deleting the split surface*

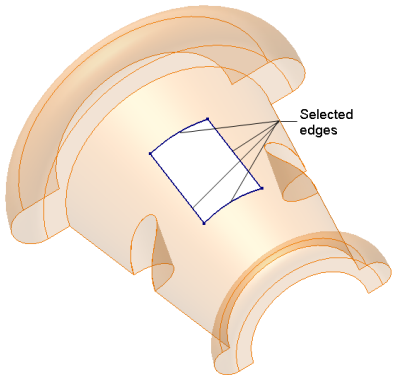


***Figure 18-62*** *3D Sketch created using edges*

9. Exit the 3D sketching environment.

10. Turn on the visibility of the sketch that was used to split the base surface, refer to Figure 18-60.

11. Create a lofted surface between the two sketches.

12. Turn off the visibility of the sketches. The model after creating the lofted surface is shown in Figure 18-63.

    Next, you need to cover the top face of the lofted surface using the **Patch** tool.

13. Choose the **Patch** tool from the **Surface** panel of the **3D Model** tab to invoke the **Boundary Patch** dialog box.

14. Select the top edges of the lofted surface and choose **OK** from the **Boundary Patch** dialog box; a boundary patch covering the top of the lofted surface is created, see Figure 18-64.

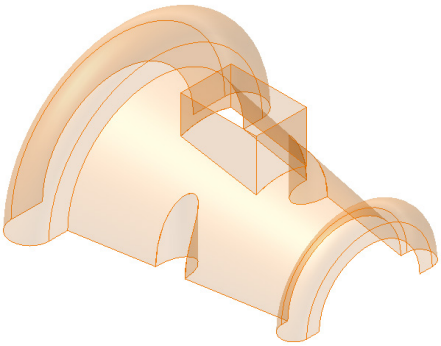

***Figure 18-63*** *Model after creating the lofted surface*

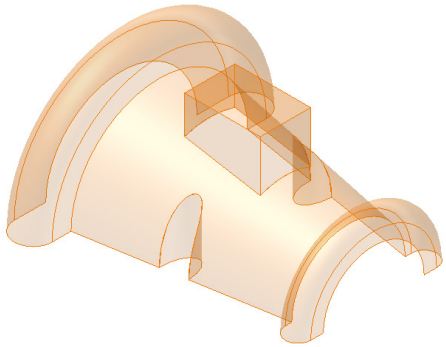

***Figure 18-64*** *Model after covering the top face of the lofted surface*

## Stitching Surfaces and Hiding Original Surfaces

After creating all the surfaces, you need to stitch them together and hide the original surfaces. The surfaces will be stitched using the **Stitch Surface** tool.

1. Invoke the **Stitch Surface** tool from the **Surface** panel of the **3D Model** tab. Select all the surfaces so that they get stitched together. Next, choose **Apply** and then **Done** from the **Stitch** dialog box. Figure 18-65 shows the model after stitching surfaces.

   When you stitch the surfaces, a stitched surface is created above the original surfaces and the visibility of original surfaces is automatically turned off.

2. Fillet all the sharp edges of the stitched surface with a radius of 2 mm. The surface after creating fillets is shown in Figure 18-66.

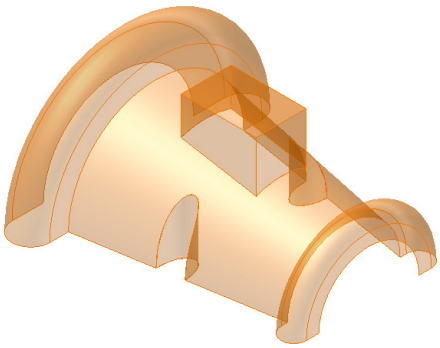

***Figure 18-65*** *Model after stitching surfaces*

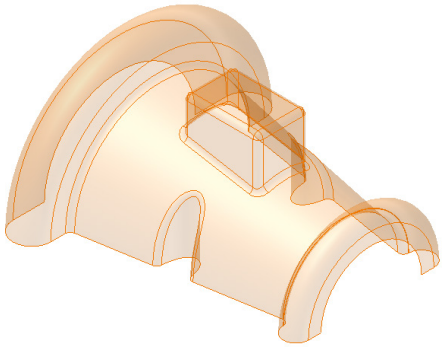

***Figure 18-66*** *Model after filleting surfaces*

## Thickening the Surface

The final step in creating the hybrid surface-solid model is to thicken the complex surface created in the previous steps. By thickening, you can add material to the surface model so as to make it a solid model. The model can be thickened using the **Thicken/Offset** tool.

1. Invoke the **Thicken/Offset** tool from the **Modify** panel of the **3D Model** tab; the **Properties-Thicken** dialog box is displayed. Select the **Quilt selection** toggle button from it.

2. Set the value in the **Distance** edit box in the **Behavior** area to **1** if not already set. Select the stitched surface.

   Select the **Quilt selection** toggle button, you will notice that the entire stitched surface is selected in a single click.

3. Choose **OK** to exit the dialog box. Now, turn off the visibility of the stitched surface using the **Browser Bar**. The final model for Tutorial 5 is shown in Figure 18-67. Figure 18-68 shows the rotated view of the same model.

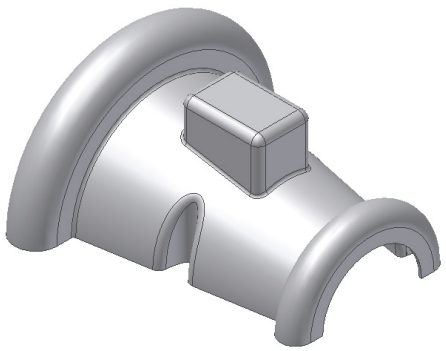

***Figure 18-67*** *Final hybrid model*

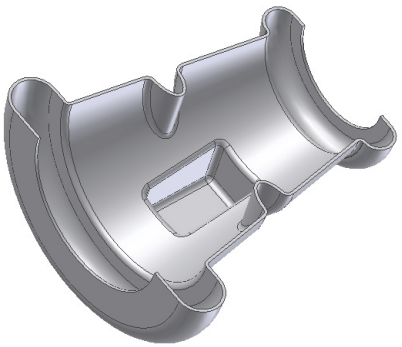

***Figure 18-68*** *Rotated view of the hybrid model*

## Self-Evaluation Test

**Answer the following questions and then compare them to those given at the end of this chapter:**

1. The options in the _____ tab of the **iPart Author** dialog box are used to add thread parameters to the iPart factory.

2. _____ parameters are automatically created when you apply dimensions to entities or create a feature.

3. _____ are mathematical expressions in which parameters are equated with algebraic or trigonometric functions.

4. The dimensioning of _____ parts is changed automatically depending upon the dimensions and functions of other parts to which they are assembled.

5. In Autodesk Inventor, every dimension is assigned a unique name called _____.

6. The _____ tool is used to create bends manually at the corners of the 3D line.

7. Autodesk Inventor allows you to create custom and standard iParts. (T/F)

8. You cannot turn off the display of surfaces. (T/F)

9. In Autodesk Inventor, the hybrid surface-solid modeling is used to create complex surfaces. (T/F)

10. Autodesk Inventor does not allow you to display dimensions as equations. (T/F)

## Review Questions

**Answer the following questions:**

1. Which of the following tabs in the **iPart Author** dialog box is used to select the parameters and dimensions to be included in the iPart factory?

   (a) **Parameters** (b) **Threads**
   (c) **Work Plane** (d) None of these

2. Which of the following is not a parameter?

   (a) Drawing (b) Model
   (c) User (d) Link

3. Which of the following tabs in the **Document Settings** dialog box is used to display dimensions as equations?

   (a) **Units** (b) **Sketch**
   (c) **Modeling** (d) None of these

4. Which of the following tabs in the **iPart Authors** dialog box is used to specify whether the selected features will be computed or suppressed while creating a part using the iPart factory?

   (a) **Parameters** (b) **Threads**
   (c) **Work Plane** (d) **Suppression**

5. Which of the following tools is used to merge a 2D sketch entity into a 3D sketch?

   (a) **Line** (b) **Bend**
   (c) **Include Geometry** (d) None of these

6. You can modify dimensions while inserting custom iParts in an assembly. (T/F)

7. You can specify sketch points using the **Inventor Precise Input** toolbar in the 3D sketching environment. (T/F)

8. Unlike the 2D sketching environment, you can save a file in the 3D sketching environment. (T/F)

9. The Link parameters are created in a separate Microsoft Excel spreadsheet. (T/F)

10. The User parameters are defined by the user for specifying the dimensions of entities and features. (T/F)

# EXERCISES

## Exercise 1

Create the following sketch with the help of parameters. After dimensioning the sketch, display the dimensions as expressions, as shown in Figure 18-69. The numeric values of the parameters are given below. **(Expected time: 30 min)**

LEN = 60
LEN1 = LEN/3
LEN2 = LEN/2.5
WID = LEN*0.75
WID1 = WID/5
WID2 = WID1

After displaying the dimensions as expressions, display them as names.

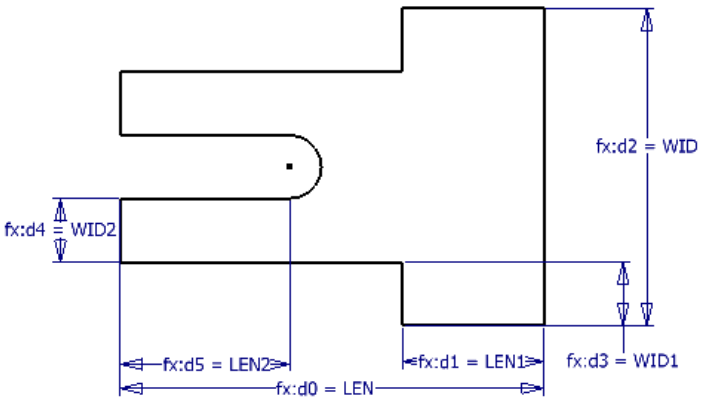


***Figure 18-69*** *Sketch with dimensions as equations*

### Answers to Self-Evaluation Test

**1. Threads**, **2.** Model, **3.** Equations, **4.** adaptive, **5.** parameter, **6. Bend**, **7.** T, **8.** F, **9.** T, **10.** F