Project 2

Panel Layout Drawing

PROJECT DESCRIPTION

In this project, you will create a drawing and insert the footprints such as DIN Rail, control relay, PLCs, and so on in it. Then, you will copy and edit these footprints. Next, you will add balloons to these footprints and make their Xdata visible. Figure P2-1 shows the complete panel layout drawing.

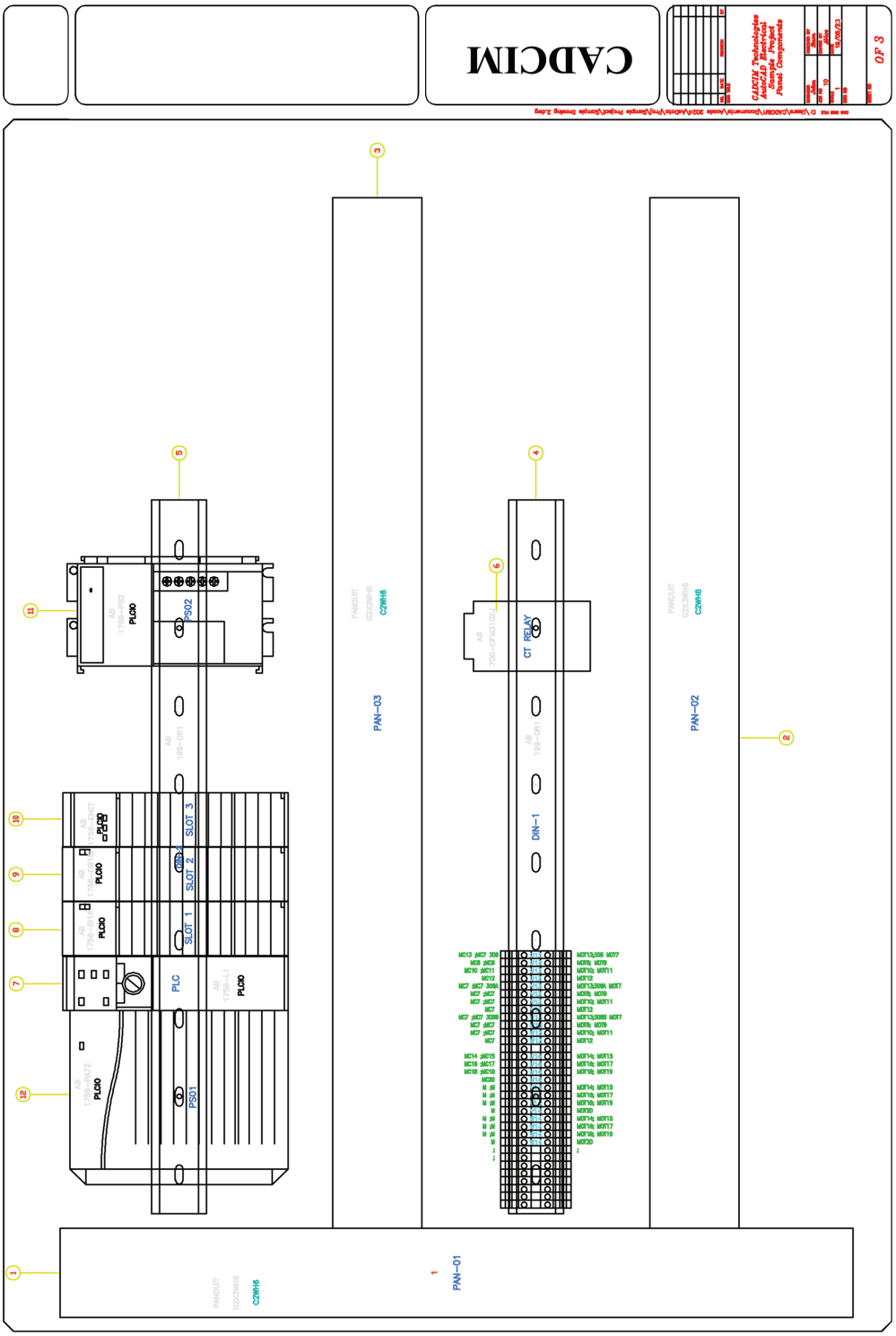

Figure P2-1 Panel layout drawing for Project 2

Creating a New Drawing

1. Make sure **Sample Project** is activated. Next, choose the **New Drawing** button from the **PROJECT MANAGER**; the **Create New Drawing** dialog box is displayed.

2. Enter **Sample Drawing 2** in the **Name** edit box.

3. Choose the **Browse** button on the right of the **Template** edit box; the **Select template** dialog box is displayed.

4. Select **CADCIM** in this dialog box and choose the **Open** button; the name and path of the template file is displayed in the **Template** edit box.

5. Enter **Panel Components** in the **Description 1** edit box.

6. Enter **Panel Layout diagram** in the **Description 2** edit box.

7. Choose the **OK** button in the **Create New Drawing** dialog box; the drawing is created in the project and its name is displayed in bold in the **Projects** rollout.

Inserting and Copying the DIN Rail

1. Choose the **Icon Menu** tool from **Panel > Insert Component Footprints > Insert Footprints** drop-down; the **Alert** message box is displayed.



2. Choose the **OK** button in this message box; the **Insert Footprint** dialog box is displayed.

3. Select the **DIN Rail** icon from the **Panel Layout Symbols** area; the **Din Rail** dialog box is displayed.

4. Select **PANDUIT, G2X3WH6, Wire duct, 2.25"x3" tall, white, slotted** from the drop-down list in the **Rail Type** area of the **Din Rail** dialog box.

5. Choose the **Pick Rail Information >>** button from the **Origin and Length** area; you are prompted to specify the insertion point of the rail.

6. Enter **1.5**,**21** at the Command prompt and press ENTER; you are prompted to specify the end point of the rail.

7. Enter **1.5**,**1** at the Command prompt and press ENTER; the **Din Rail** dialog box is displayed again.

8. Make sure the **Vertical** radio button is selected in the **Orientation** area of the **Din Rail** dialog box and make sure the **NC holes** radio button is selected in the **Panel Mounting** area.

9. Choose the **OK** button in the **Din Rail** dialog box; the **Panel Layout - Component Insert/Edit** dialog box is displayed.

10. Enter **PAN-01** in the **Tag** edit box of the **Component Tag** area.

11. Choose the **OK** button in this dialog box; the PAN-01 DIN Rail is inserted in the drawing, as shown in Figure P2-2.

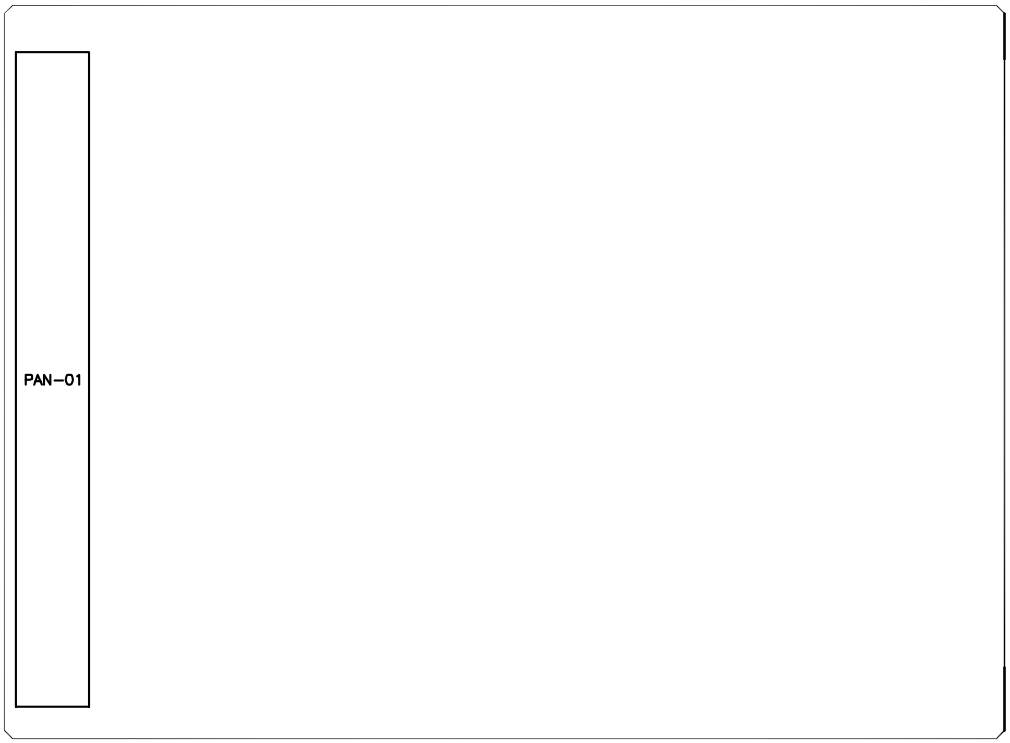

Figure P2-2 *PAN-01 DIN Rail inserted in the drawing*

12. Choose the **Icon Menu** tool from **Panel > Insert Component Footprints > Insert Footprints** drop-down; the **Insert Footprint** dialog box is displayed.

13. Select the **DIN Rail** icon in the **Panel Layout Symbols** area; the **Din Rail** dialog box is displayed.

14. In the **Din Rail** dialog box, select **PANDUIT, G2X3WH6, Wire duct, 2.25"x3" tall, white, slotted** from the drop-down list in the **Rail Type** area.

15. Choose the **Pick Rail Information >>** button in the **Origin and Length** area; you are prompted to specify the insertion point of the rail.

16. Enter **2.625**,**5** at the Command prompt and press ENTER; you are prompted to specify the end point of the rail.

17. Enter **28.625**,**13** at the Command prompt and press ENTER; the **Din Rail** dialog box is displayed again.

18. In the **Din Rail** dialog box, make sure the **Horizontal** radio button is selected in the **Orientation** area and the **NC holes** radio button is selected in the **Panel Mounting** area.

19. Choose the **OK** button from the **Din Rail** dialog box; the **Panel Layout - Component Insert/Edit** dialog box is displayed.

20. In the **Panel Layout - Component Insert/Edit** dialog box, enter **PAN-02** in the **Tag** edit box of the **Component Tag** area.

21. Choose the **OK** button in this dialog box; the PAN-02 DIN Rail is inserted in the drawing, as shown in Figure P2-3.
22. Choose the **Copy Footprint** tool from the **Edit Footprints** panel of the **Panel** tab; you are prompted to select "just like" component. Select PAN-02 DIN Rail.



23. Enter **2.625,13** at the Command prompt and press ENTER; the **Panel Layout - Component Insert/Edit** dialog box is displayed.

24. Enter **PAN-03** in the **Tag** edit box in the **Component Tag** area of this dialog box.

25. Choose the **OK** button in this dialog box; the PAN-03 DIN Rail is inserted in the drawing, as shown in Figure P2-4.



Figure P2-3 *PAN-02 DIN Rail inserted in the drawing*

26. Choose the **Icon Menu** tool from **Panel > Insert Component Footprints > Insert Footprints** drop-down; the **Insert Footprint** dialog box is displayed.

27. Select the **DIN Rail** icon in the **Panel Layout Symbols** area; the **Din Rail** dialog box is displayed.

28. Select **AB**, **199-DR1 Symmetrical Rail 35mm x 7.5mm 1m Ion** from the drop-down list in the **Rail Type** area of the **Din Rail** dialog box.

29. Choose the **Pick Rail Information >>** button from the **Origin and Length** area; you are prompted to specify the insertion point of the rail.

30. Enter **3**,**9** at the Command prompt and press ENTER; you are prompted to specify the end point of the rail.

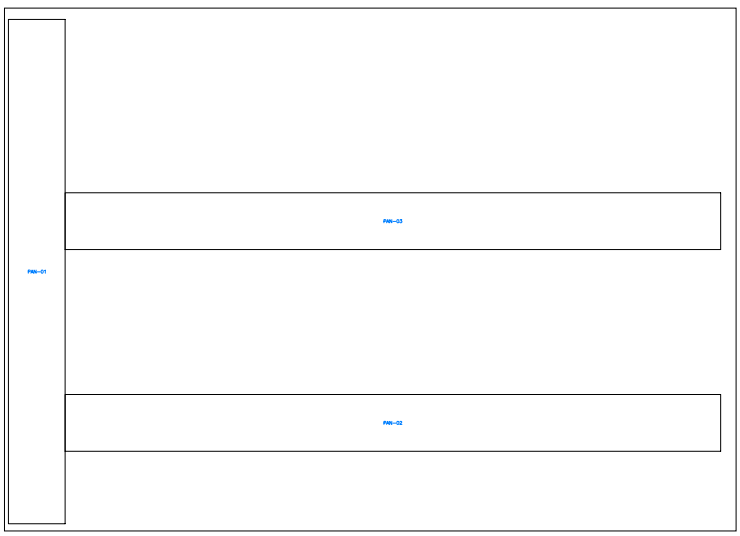

Figure P2-4 *PAN-03 DIN Rail inserted in the drawing*

31. Enter **21**,**9** at the Command prompt and press ENTER; the **Din Rail** dialog box is displayed again.

32. Make sure the **Horizontal** radio button is selected in the **Orientation** area and make sure the **NC holes** radio button is selected in the **Panel Mounting** area.

33. Choose the **OK** button in the **Din Rail** dialog box; the **Panel Layout - Component Insert/ Edit** dialog box is displayed.

34. Enter **DIN-1** in the **Tag** edit box of the **Component Tag** area.

35. Choose the **OK** button; the DIN-1 DIN Rail is inserted in the drawing, as shown in Figure P2-5.

36. Choose the **Copy Footprint** tool from the **Edit Footprints** panel of the **Panel** tab; you are prompted to select “just like” component. Select DIN-1 DIN Rail.

37. Enter **3**,**18** at the Command prompt and press ENTER; the **Panel Layout - Component**

Insert/Edit dialog box is displayed.

38. Enter **DIN-2** in the **Tag** edit box of the **Component Tag** area.

39. Choose the **OK** button; the DIN-2 DIN Rail is inserted in the drawing, as shown in Figure P2-6.

Inserting Relay in the Drawing

1. Choose the **Icon Menu** tool from **Panel > Insert Component Footprints > Insert Footprints** drop-down; the **Insert Footprint** dialog box is displayed.

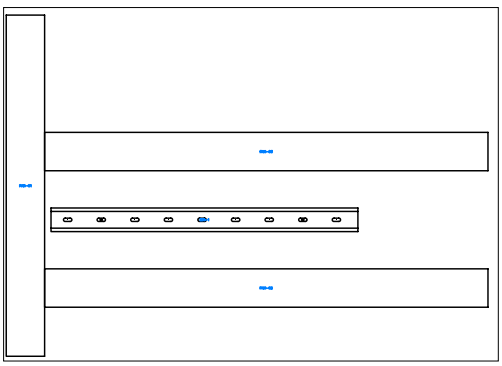

Figure P2-5 *DIN-1 DIN Rail inserted in the drawing*

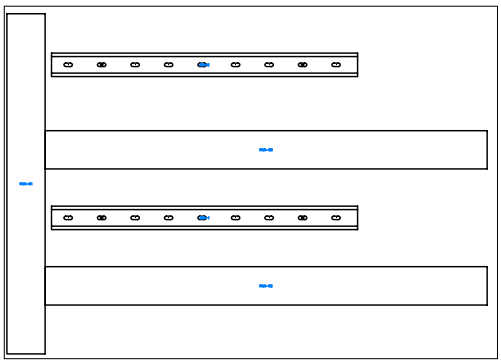

Figure P2-6 *DIN-2 DIN Rail inserted in the drawing*

2. Select the **Relays** icon in the **Panel Layout Symbols** area; the **Panel: Relays and Latches** area is displayed.

3. Select **Relay Coil** from this area; the **Footprint** dialog box is displayed.

4. Choose the **Catalog lookup** button in the **Choice A** area of this dialog box; the **Catalog Browser** dialog box is displayed.

5. In this dialog box, erase the content from the **Search** field and enter **700-CFM310ZJ** in this field. Next, choose the **Search** button.

6. Select the row with **700-CFM310ZJ** in the **Catalog** column of the **Catalog Browser** dialog box and choose the **OK** button; the catalog is displayed in the **Choice A** area of the **Footprint** dialog box.

7. Choose the **OK** button in the **Footprint** dialog box; you are prompted to specify the location for AB/CR-CONTROL RELAYS/abcrcf.dwg.

8. Enter **16.375,7.625** at the Command prompt and press ENTER; you are prompted to select rotation.

9. Move the cursor toward the right in the horizontal direction and click on the screen; the **Panel Layout - Component Insert/Edit** dialog box is displayed.

10. Enter **CR300** in the **Tag** edit box of the **Component Tag** area.

11. Choose the **OK** button; the CR300 relay is inserted in the drawing, as shown in Figure P2-7.

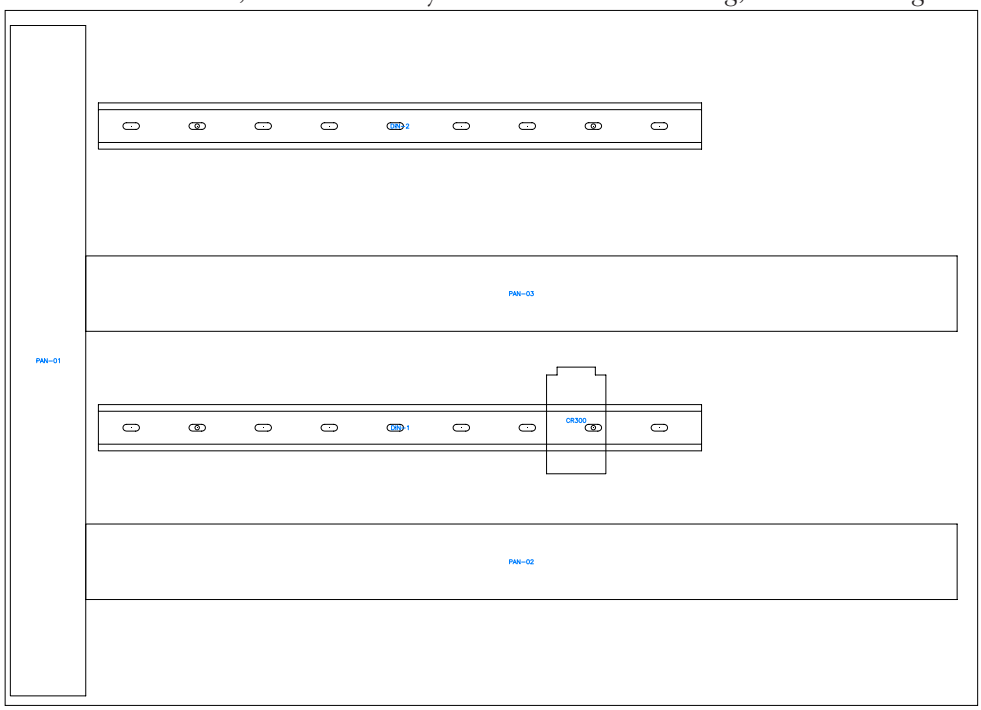

Figure P2-7 *The CR300 relay inserted in the drawing*

Inserting PLCS in the Drawing

1. Choose the **Icon Menu** tool from **Panel > Insert Component Footprints > Insert Footprints** drop-down; the **Insert Footprint** dialog box is displayed.



2. Select the **PLC I/O** icon in the **Panel Layout Symbols** area; the **Footprint** dialog box is displayed.

3. Choose the **Catalog lookup** button from the **Choice A** area of the **Footprint** dialog box; the **Catalog Browser** dialog box is displayed.

4. In this dialog box, erase the content from the **Search** field and enter **1756-L1** in this field. Next, choose the **Search** button.

5. Select the row with **1756-L1** in the **Catalog** column of the **Catalog Browser** dialog box and then choose the **OK** button; the selected catalog is displayed in the **Choice A** area of the **Footprint** dialog box.

6. Choose the **OK** button in this dialog box; you are prompted to specify the location for AB/PLCIO-PLCS/ABIPA140.dwg.

7. Enter **8.125**,**15.25** at the Command prompt and press ENTER; you are prompted to select rotation.

8. Move the cursor toward right in the horizontal direction and click on the screen; the **Panel Layout - Component Insert/Edit** dialog box is displayed.

9. Enter **PLC** in the **Tag** edit box of the **Component Tag** area.

10. Choose the **OK** button; the PLC is inserted in the drawing, as shown in Figure P2-8.

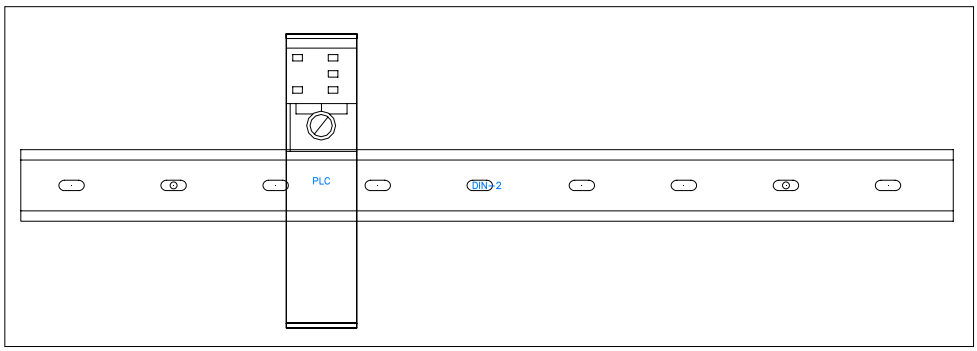

Figure P2-8 *PLC inserted in the drawing*

11. Repeat step 1 and select the **PLC I/O** icon in the **Panel Layout Symbols** area; the **Footprint** dialog box is displayed.

12. Choose the **Catalog lookup** button from the **Choice A** area of this dialog box; the **Catalog Browser** dialog box is displayed.

13. In this dialog box, erase the content from the **Search** field and enter **1756** in this field. Next, choose the **Search** button.

14. Select the row with **1756-IB16** in the **Catalog** column of the **Catalog Browser** dialog box and then choose the **OK** button; the catalog is displayed in the **Choice A** area of the **Footprint** dialog box.

15. Choose the **OK** button in the **Footprint** dialog box; you are prompted to specify the location for AB/PLCIO-PLCS/ABIOM130.dwg.

16. Enter **9.5**,**15.25** at the Command prompt and press ENTER; you are prompted to select rotation.

17. Move the cursor toward right in the horizontal direction and click on the screen; the **Panel Layout - Component Insert/Edit** dialog box is displayed.

18. Enter **SLOT 1** in the **Tag** edit box of the **Component Tag** area.

19. Choose the **OK** button; the SLOT 1 is inserted in the drawing, as shown in Figure P2-9.

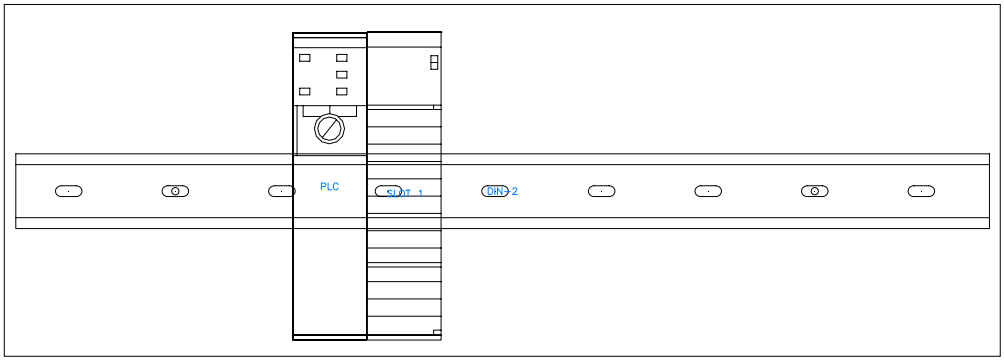

Figure P2-9 *The SLOT 1 inserted in the drawing*

20. Repeat step 1 and select the **PLC I/O** icon in the **Panel Layout Symbols** area; the **Footprint** dialog box is displayed.

21. Choose the **Catalog lookup** button from the **Choice A** area of this dialog box; the **Catalog Browser** dialog box is displayed.

22. In this dialog box, erase the content from the **Search** field and enter **1756** in this field. Next, choose the **Search** button.

23. Select the row having **1756-OB16I** in the **Catalog** column of the **Catalog Browser** dialog box and then choose the **OK** button; the catalog is displayed in the **Choice A** area of the **Footprint** dialog box.

24. Choose the **OK** button in this dialog box; you are prompted to specify the location for AB/PLCIO-PLCS/ABIOM020.dwg.

25. Enter **10.875,15.25** at the Command prompt and press ENTER; you are prompted to select rotation.

26. Move the cursor toward the right in the horizontal direction and click on the screen; the **Panel Layout - Component Insert/Edit** dialog box is displayed.

27. Enter **SLOT 2** in the **Tag** edit box of the **Component Tag** area.

28. Choose the **OK** button in this dialog box; the SLOT 2 is inserted in the drawing, as shown in Figure P2-10.

29. Repeat step 1 and select the **PLC I/O** icon in the **Panel Layout Symbols** area; the **Footprint** dialog box is displayed.

30. Choose the **Catalog lookup** button from the **Choice A** area of this dialog box; the **Catalog Browser** dialog box is displayed.

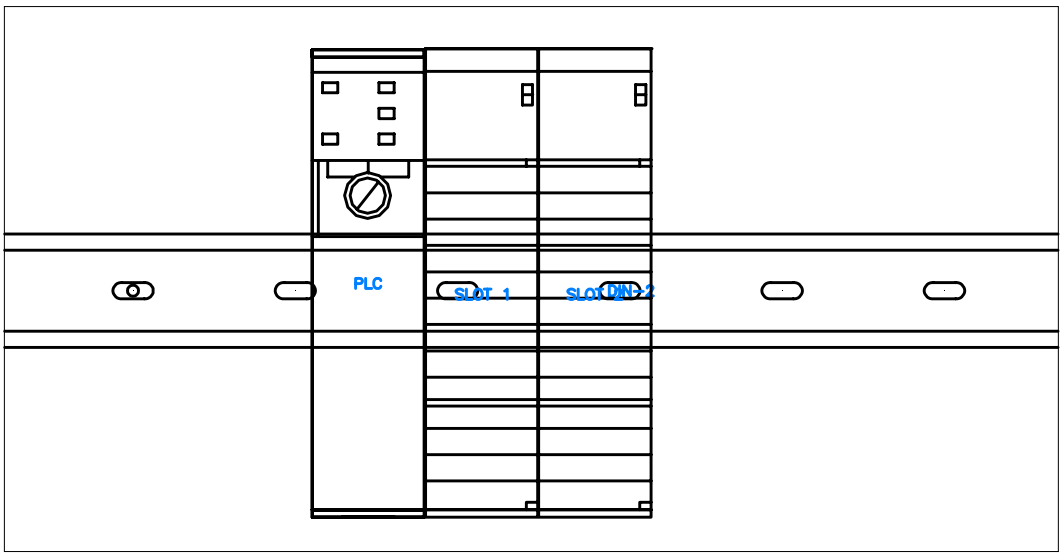

Figure P2-10 *The SLOT 2 inserted in the drawing*

31. In this dialog box, erase the content from the **Search** field and enter **1756** in this field. Next, choose the **Search** button.

32. Select the row with **1756-ENET** in the **Catalog** column of the **Catalog Browser** dialog box and then choose the **OK** button; the catalog is displayed in the **Choice A** area of the **Footprint** dialog box.

33. Choose the **OK** button in this dialog box; you are prompted to specify location for AB/PLCIO-PLCS/ABCMA230.dwg.

34. Enter **12.25**,**15.25** at the Command prompt and press ENTER; you are prompted to select rotation.

35. Move the cursor toward right in the horizontal direction and click on the screen; the **Panel Layout - Component Insert/Edit** dialog box is displayed.

36. Enter **SLOT 3** in the **Tag** edit box of the **Component Tag** area.

37. Choose the **OK** button; the SLOT 3 is inserted in the drawing, as shown in Figure P2-11.

38. Repeat step 1 and select the **PLC I/O** icon from the **Panel Layout Symbols** area of the **Insert Footprint** dialog box; the **Footprint** dialog box is displayed.

39. Choose the **Catalog lookup** button from the **Choice A** area of this dialog box; the **Catalog Browser** dialog box is displayed.

40. In this dialog box, erase the content from the **Search** field and enter **1769** in this field. Next, choose the **Search** button.

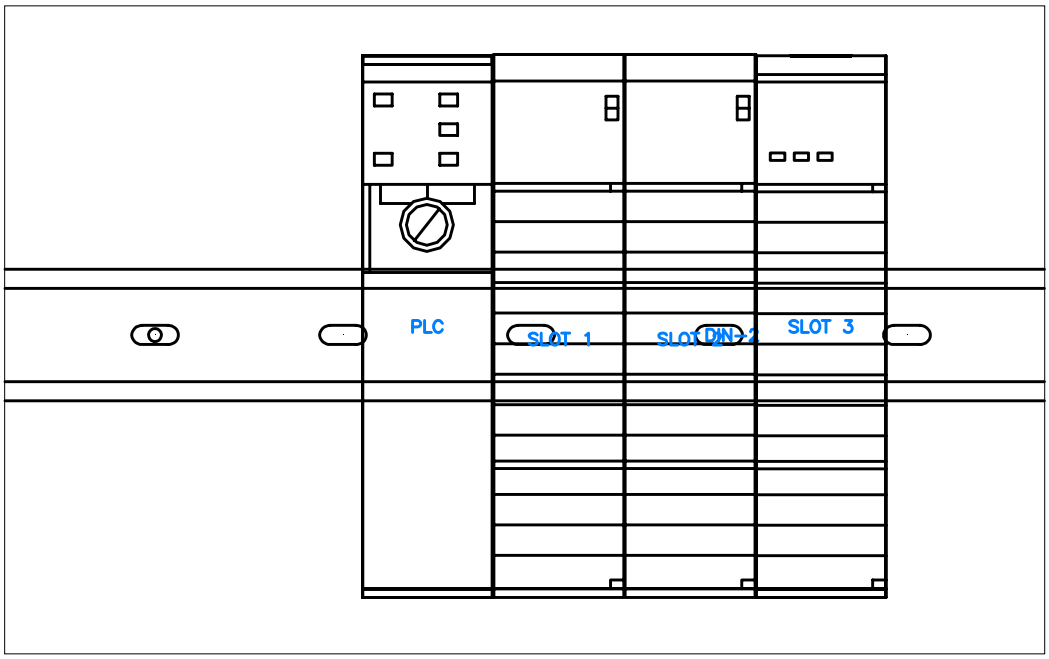

Figure P2-11 *The SLOT 3 inserted in the drawing*

41. Select the row with **1769-PB2** in the **Catalog** column of the **Catalog Browser** dialog box and then choose the **OK** button; the catalog is displayed in the **Choice A** area of the **Footprint** dialog box.

42. Choose the **OK** button in the **Footprint** dialog box; you are prompted to specify the location for AB/PLCIO-PLCS/1769-PS.dwg.

43. Enter **16.625**,**15.625** at the Command prompt and press ENTER; you are prompted to select rotation.

44. Move the cursor toward right in the horizontal direction and click on the screen; the **Panel Layout - Component Insert/Edit** dialog box is displayed.

45. Enter **PS01** in the **Tag** edit box of the **Component Tag** area.

46. Choose the **OK** button; the PS01 power supply is inserted in the drawing, as shown in Figure P2-12.

47. Repeat step 1 and select the **PLC I/O** icon in the **Panel Layout Symbols** area; the **Footprint** dialog box is displayed.

48. Choose the **Catalog lookup** button from the **Choice A** area of this dialog box; the **Catalog Browser** dialog box is displayed.

49. In this dialog box, erase the content from the **Search** field and enter **1756** in this field. Next, choose the **Search** button.

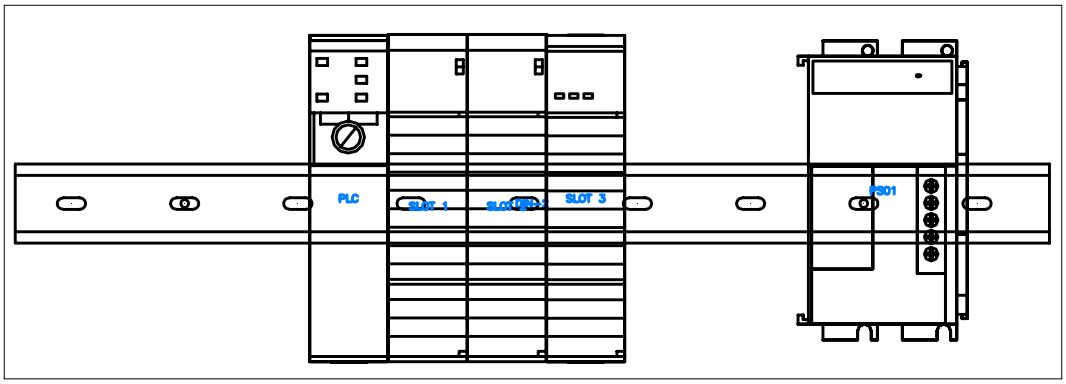

Figure P2-12 *The PS01 power supply inserted in the drawing*

50. Select the row with **1756-PA72** in the **Catalog** column of the **Catalog Browser** dialog box and then choose the **OK** button; the catalog is displayed in the **Choice A** area of the **Footprint** dialog box.

51. Choose the **OK** button in the **Footprint** dialog box; you are prompted to specify the location for AB/PLCIO-PLCS/ABCMA180.dwg.

52. Enter **8.125,15.25** at the Command prompt and press ENTER; you are prompted to select rotation.

53. Move the cursor toward right in the horizontal direction and click on the screen; the **Panel Layout - Component Insert/Edit** dialog box is displayed.

54. Enter **PS01** in the **Tag** edit box of the **Component Tag** area. Next, choose the **OK** button in this dialog box; the **Duplicate Panel Layout Tag** message box is displayed. Choose the **Continue** button from it and then choose the **OK** button from the **Panel Layout - Component Insert/Edit** dialog box; PS01 power supply is inserted in the drawing, as shown in Figure P2-13. Figure P2-14 shows all footprints inserted in the drawing.

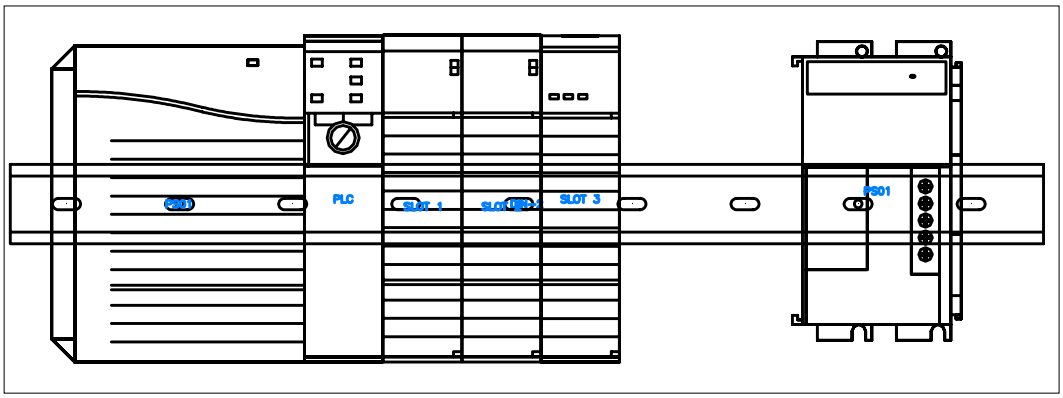

Figure P2-13 *The PS01 power supply inserted in the drawing*

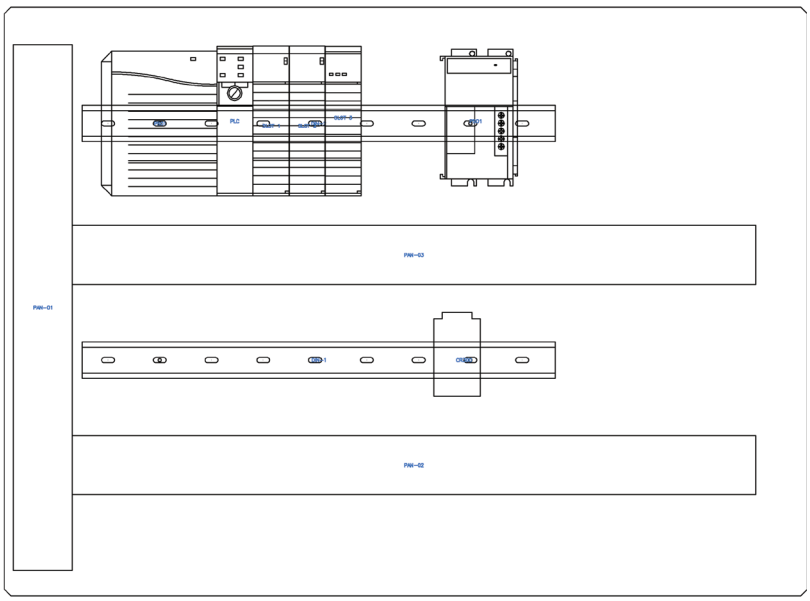

Figure P2-14 *All footprints inserted in the drawing*

Inserting the Terminal Strip

1. Choose the **Editor** tool from the **Terminal Footprints** panel of the **Panel** tab; the **Terminal Strip Selection** dialog box is displayed.



Note

*If the **QSAVE** message box is displayed, choose the **OK** button in it to save the drawing.*

2. In this dialog box, select the **TB1** terminal strip and choose the **Edit** button; the **Terminal Strip Editor** dialog box is displayed. If the **Defined Terminal Wiring Constraints Exceeded** message box is displayed, choose the **OK** button in this message box to close it.

3. Choose the **Catalog Code Assignment** tab and then select all terminal strips by using the SHIFT key. Next, choose the **Assign Catalog Number** button in the **Catalog** area; the **Catalog Browser** dialog box is displayed.

4. In this dialog box, erase the content from the **Search** field and enter **1492** in this field, if any. Next, choose the **Search** button.

5. Select the row having **1492-W3** in the **Catalog** column of the **Catalog Browser** dialog box and then choose the **OK** button; the catalog is displayed in the **Catalog Code Assignment** tab.

6. Choose the **Layout Preview** tab and make sure the **Graphical Terminal Strip** radio button is selected.

7. Select **Wire Number Tag : Terminal** from the **Default pick list for Annotation format** list box.

8. Make sure **1.0** is selected in the **Scale on Insert** drop-down list and then select **270.0** from the **Angle on Insert** drop-down list.

9. Choose the **Insert** button. Next, enter **11.25,9** at the Command prompt and press ENTER; the **Terminal Strip Editor** dialog box is displayed again. Choose the **OK** button in this dialog box; the **Terminal Strip Selection** dialog box is displayed. Choose the **Done** button in this dialog box; the terminal strip is inserted in the drawing, as shown in Figure P2-15.

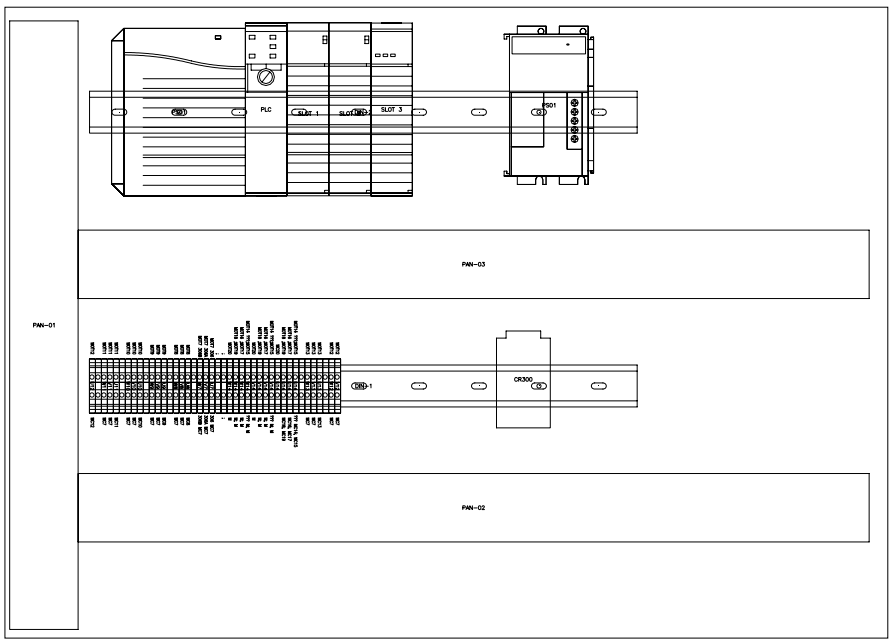

Figure P2-15 *Terminal strip inserted in the drawing*

Note

*If the **QSAVE** message box is displayed, choose the **OK** button in it to save the drawing.*

Editing Footprints

1. Choose the **Edit** tool from the **Edit Footprints** panel of the **Panel** tab; you are prompted to select the component.
2. Select **PAN-01** DIN Rail; the **Panel Layout - Component Insert/Edit** dialog box is displayed.
3. Enter **1** in the **Item Number** edit box and choose the **OK** button.
4. Similarly, select the following components and give them the item number in the **Item Number** edit box of the **Panel Layout - Component Insert/Edit** dialog box.

Note

*1. If the **Mismatch Item Number Found** message box is displayed, choose the **OK** button in it.*

*2. If the **Update Related Components** message box is displayed, choose the **Skip** button in it.*

a) PAN-02 = 2
b) PAN-03 = 3
c) DIN-1 = 4
d) DIN-2 = 5
e) CR300 = 6
f) PLC = 7
g) SLOT 1 = 8
h) SLOT 2 = 9
i) SLOT 3 = 10
j) PS01 mounted on the right of DIN Rail DIN-2 = 11
k) PS01 mounted on the left of DIN Rail DIN-2 = 12

Adding Balloons to Footprints

1. Choose the **Balloon** tool from the **Insert Component Footprints** panel of the **Panel** tab; you are prompted to select the component to add balloon.
2. Select **PAN-01** DIN Rail; you are prompted to specify the leader start or the balloon insert point.
3. Enter **1.5**,**21** at the Command prompt and press ENTER; you are prompted to specify the end point.
4. Enter **1.5**,**22** at the Command prompt and press ENTER.
5. Press ENTER; the balloon is inserted in the **PAN-01** DIN Rail, as shown in Figure P2-16; you

are prompted to select the component to add balloon.

6. Select **PAN-02** DIN Rail; you are prompted to specify the leader start or the balloon insert point.

7. Enter **15**,**3.875** at the Command prompt and press ENTER; you are prompted to specify the end point.
8. Enter **15**,**2.875** at the Command prompt and press ENTER; the balloon is inserted in the **PAN-02** DIN Rail.

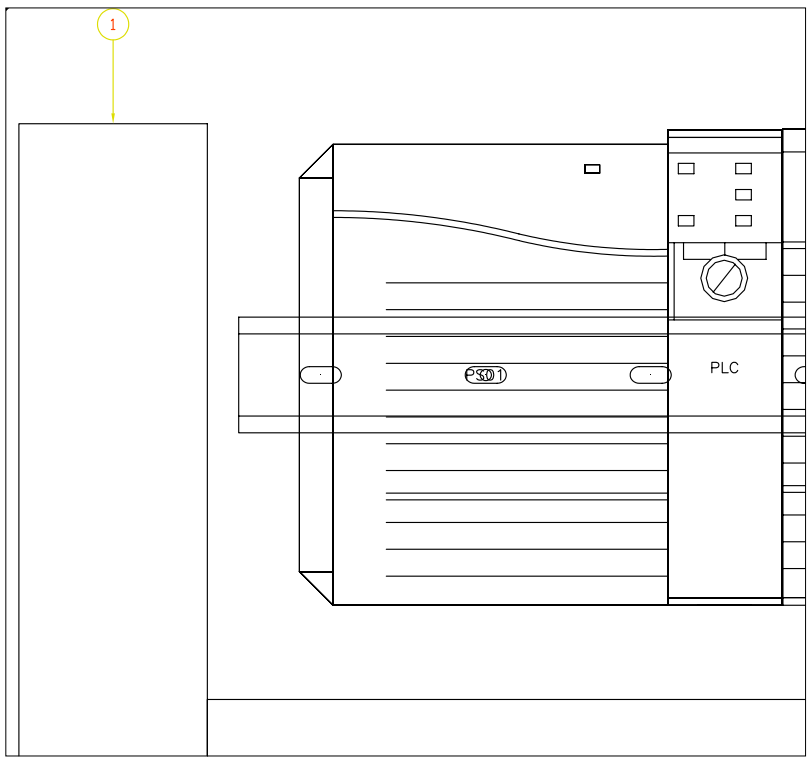

Figure P2-16 *The balloon inserted in the* ***PAN-01*** *DIN Rail*

9. Similarly, select and add the balloons to the following components at the given coordinates:

Component	Start Point	End Point
PAN-03	28.625,13	29.625,13
DIN-1	21,9	22,9
DIN-2	21,18	22,18
CR300	18.15,10	19.15,10
PLC	8.8,20.92	8.8,21.92
SLOT 1	10.15,20.93	10.15,21.93

SLOT 2	11.55,20.93	11.55,21.93
SLOT 3	12.95,20.93	12.95,21.93
PS01 mounted on the right of DIN Rail DIN-2	18.20,20.56	18.20,21.56
PS01 mounted on the left of DIN Rail DIN-2	6,20.75	6,21.75

10. When you complete adding balloons to the components, press ENTER to exit the command. Figure P2-17 shows the balloons inserted in all components.

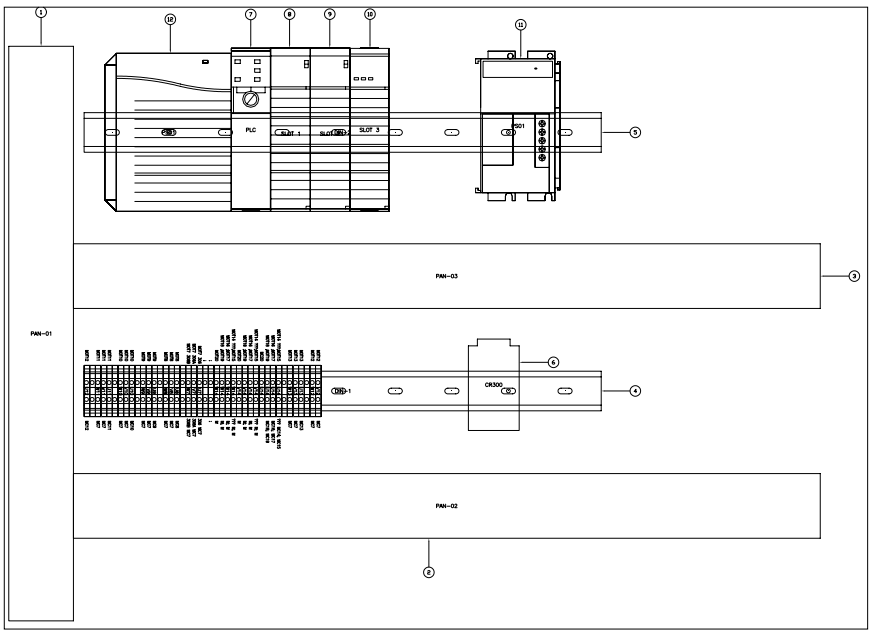

Figure P2-17 *Balloons added to all components*

Making Xdata of the Footprints Visible

1. Choose the **Make Xdata Visible** tool from **Panel > Other Tools > Panel Configuration** drop-down; you are prompted to select the footprint.



2. Select **PAN-01** DIN Rail; the **Select XData to Change to a Block Attribute** dialog box is displayed.

3. Select the radio button on the left of the **MFG** drop-down list and choose the **Insert** button; you are prompted to specify the location for inserting attribute.

4. Enter **1**,**17** at the Command prompt and press ENTER; the **Select XData to Change to a Block Attribute** dialog box appears again.

5. Select the radio button on the left of the **CAT** drop-down list and choose the **Insert** button; you are prompted to specify the location for inserting attribute.

6. Enter **1,16.5** at the Command prompt and press ENTER; the **Select XData to Change to a Block Attribute** dialog box appears again.

7. Select the radio button on the left of the **ASSYCODE** drop-down list and choose the **Insert** button; you are prompted to specify the location for inserting attribute.

8. Enter **1,16** at the Command prompt and press ENTER; the **Select XData to Change to a Block Attribute** dialog box is displayed again.

9. Choose the **Done** button to exit the dialog box. Figure P2-18 shows the attributes inserted in the footprint.

10. Similarly, you need to make Xdata of the rest of the footprints visible. To do so, repeat step 1, select the remaining footprints, and then place the attributes in the footprints, as shown in Figures P2-19 and P2-20. Figure P2-21 shows the panel layout drawing after inserting the attributes.



Figure P2-18 *Attributes inserted in the footprint*

Moving the Attributes and Changing their Size

1. Choose the **Move/Show Attribute** tool from **Schematic > Edit Components > Modify Attributes** drop-down; you are prompted to select the attribute to move.

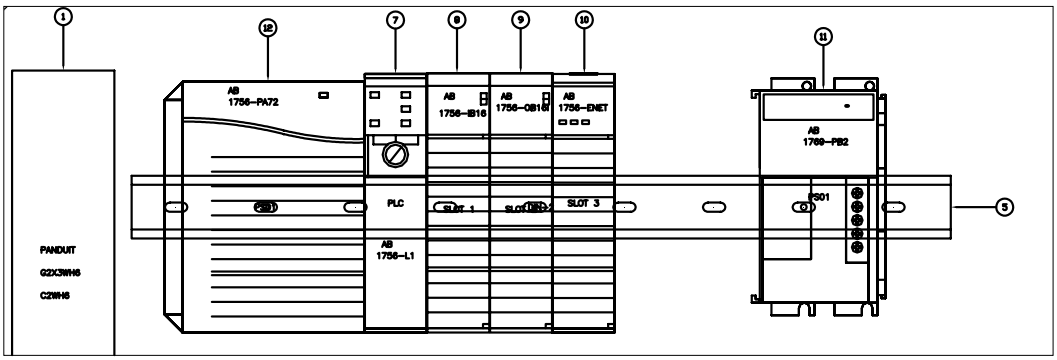

Figure P2-19 *Attributes inserted in the upper part of the panel layout drawing*

2. Select DIN-1 attribute and move it to a new location, as shown in Figure P2-22.

3. Similarly, select the following attributes and move them to new locations:

   a) PS01 mounted on the left of DIN-2
   b) SLOT 1
   c) SLOT 2
   d) DIN-2
   e) PS01 mounted on the right of DIN-2

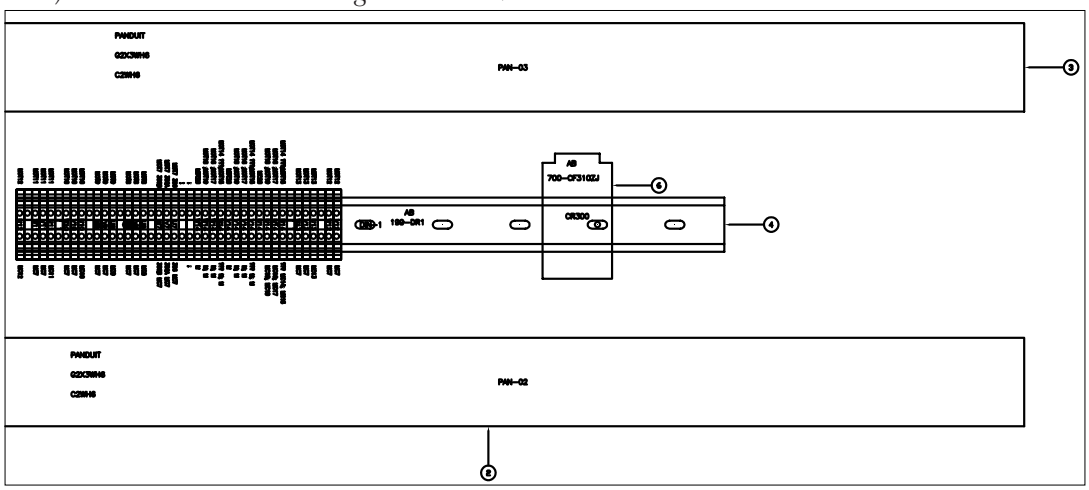

Figure P2-20 *Attributes inserted in the lower part of the panel layout drawing*

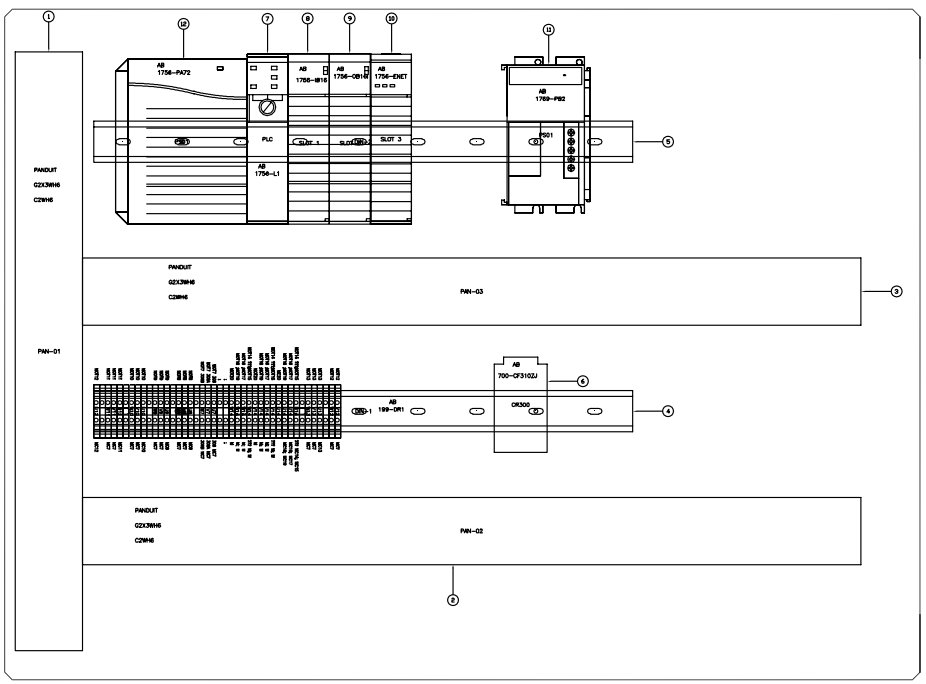

Figure P2-21 *Panel layout drawing after inserting the attributes*

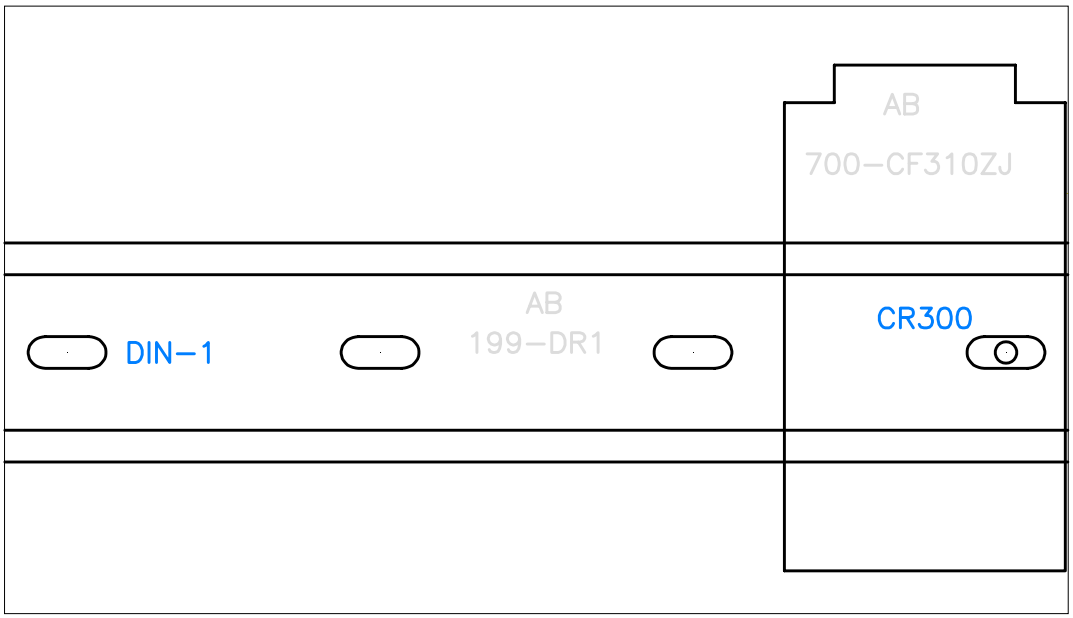

Figure P2-22 *DIN-1 attribute moved*

Figure P2-23 shows the attributes moved to new locations.

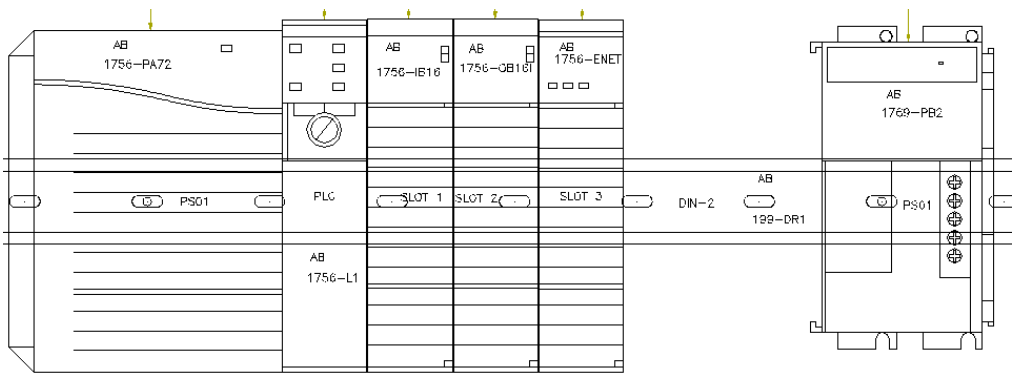

Figure P2-23 *Attributes moved to new locations*

4. To change the size of the attributes, choose the **Change Attribute Size** tool from **Schematic > Edit Components > Modify Attributes** drop-down; the **Change Attribute Size** dialog box is displayed.

5. Enter **0.15** in the **Size** edit box and make sure 1.0 is displayed in the **Width** edit box. Next, select the **Apply** check box.

6. Choose the **Single** button and select the following attributes to change their size:

   PAN-01
   PAN-02
   DIN-1
   PAN-03
   PS01 mounted on the left of DIN-2
   PLC
   SLOT 1
   SLOT 2
   SLOT 3
   DIN-2
   PS01 mounted on the right of DIN-2

7. Press ENTER to exit the command.

Exporting Drawing Data to an Excel File

1. Choose the **To Spreadsheet** tool from the **Export** panel of the **Import/Export Data** tab; the **Export to Spreadsheet** dialog box is displayed.



2. In this dialog box, select the **Panel Components*** radio button and choose the **OK** button; the **Panel Layout Data Export** dialog box is displayed, as shown in Figure P2-24.

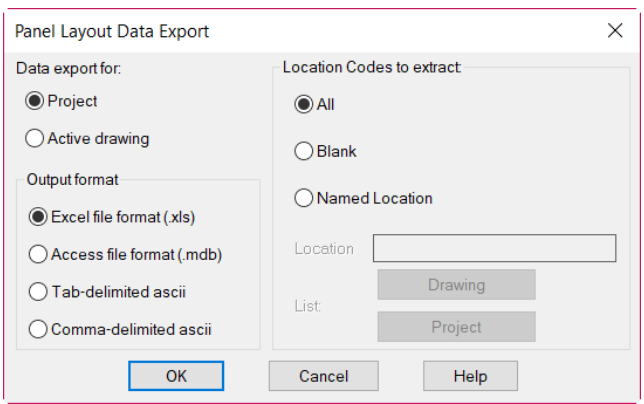

Figure P2-24 *The* ***Panel Layout Data Export*** *dialog box*

3. Select the **Active Drawing** radio button from the **Data export for** area and the **Excel file format (.xls)** radio button from the **Output format** area. Next, choose the **OK** button; the **Select file name for drawing's XLS output** dialog box is displayed.

4. Browse to **Documents > Acade 2025 > AeData > Proj > Sample Project** in the **Save in** drop-down list.

5. Enter **Panel Components** in the **File name** edit box.

6. Choose the **Save** button; the components present in the *Sample Drawing 2.dwg* file are exported to an Excel sheet.

Changing Data in an Excel File

1. Open the Windows Explorer and browse to **Documents > Acade 2025 > AeData > Proj > Sample Project**. Next, open the *Panel Components.xls* file.

2. In this file, change the tag of the power supply corresponding to catalog number 1769-PB2 to **PS02** under the **TAGNAME** column, as shown in Figure P2-25. Next, save and close this file.

Importing Drawing Data from an Excel File

1. Choose the **From Spreadsheet** tool from the **Import** panel of the **Import/Export Data** tab; the **Update Drawings from Spreadsheet File (xls, mdb, csv Format)** dialog box is displayed.

2. In this dialog box, select **Panel Components** from the list displayed and choose **Open**; the **Update Drawing per Spreadsheet Data** dialog box is displayed. In this dialog box, select the **Active Drawing** radio button and choose the **OK** button; the tagname of the power supply on the right of DIN-2 is changed to PS02, as shown in Figure P2-26.

(PAR1_CH	TAGNAME	DESC1	DESC2	DESC3	(REF)	MFG	CAT	ASSYCOD	CNT	UM	INST	LOC	MOUNT	GROUPW	WDBLKNA	RA
1	PAN-01					PANDUIT	G2X3WH6	C2WH6							WW	
1	PS01					AB	1756-PA72								PLCIO	
1	PLC					AB	1756-L1								PLCIO	
1	SLOT 1					AB	1756-IB16								PLCIO	
1	SLOT 2					AB	1756-OB16I								PLCIO	
1	SLOT 3					AB	1756-ENET								PLCIO	
1	PS02					AB	1769-PB2								PLCIO	
1	PAN-03					PANDUIT	G2X3WH6	C2WH6							WW	
1	DIN-1					AB	199-DR1								DIN	
1	CR300					AB	700-CF310ZJ								CR	
1	PAN-02					PANDUIT	G2X3WH6	C2WH6							WW	
1	DIN-2					AB	199-DR1								DIN	

Figure P2-25 *The value of tag of the power supply under the TAGNAME column changed*

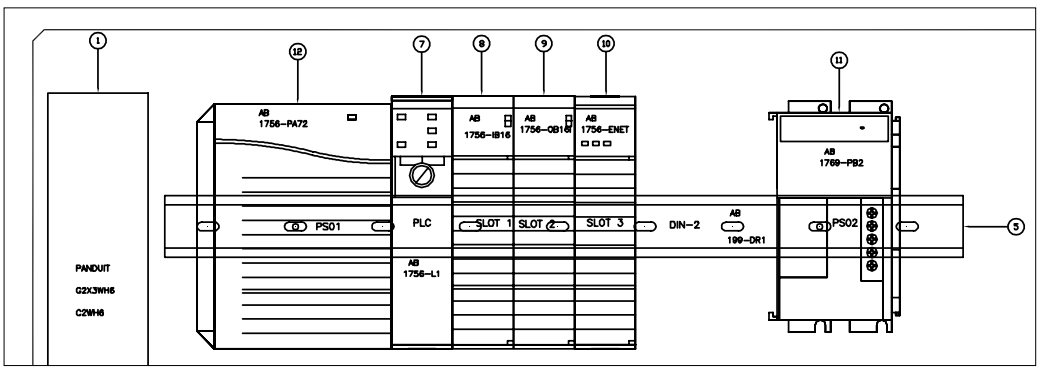

Figure P2-26 *The tagname of power supply changed to PS02*

Creating a New Drawing and Placing the Panel Bill of Material Report in it

1. Choose the **New Drawing** button from the **PROJECT MANAGER**; the **Create New Drawing** dialog box is displayed.

2. Enter **Panel Report** in the **Name** edit box.

3. Choose the **Browse** button on the right of the **Template** edit box; the **Select template** dialog box is displayed.

4. Select **CADCIM** from this dialog box and choose the **Open** button; the name and path of the template file is displayed in the **Template** edit box.

5. Enter **Panel Bill of Material Report** in the **Description 1** edit box.

6. Choose the **OK** button in the **Create New Drawing** dialog box; the drawing is created in the project and its name is displayed in bold in the **Projects** rollout.

7. Choose the **Reports** tool from the **Panel** panel of the **Reports** tab; the **Panel Reports** dialog box is displayed.

8. Select the **Bill of Material** in the **Report Name** area and make sure the **Project** radio button is selected in the **Panel Bill of Material** area.

9. Choose the **OK** button from the **Panel Reports** dialog box; the **Select Drawings to Process** dialog box is displayed. Choose the **Do All** button; the drawings are transferred from the top list to the bottom list. Choose the **OK** button; the **Qsave** message box is displayed. Choose **OK**; the **Report Generator** dialog box is displayed.

10. Choose the **Put on Drawing** button from this dialog box; the **Table Generation Setup** dialog box is displayed.

11. Make sure the **Insert New** radio button is selected in the **Table** area.

12. Choose the **Pick** button from the **First New Section Placement** area; you are prompted to specify the insertion point.

13. Click on the upper left corner of the title block; you will return to the **Table Generation Setup** dialog box.

14. Choose the **OK** button; the table is inserted into the drawing and the **Report Generator** dialog box is displayed again. Choose the **Close** button to exit the dialog box. Figure P2-27 shows the panel Bill of Material report.

ITEM	TAGS	QTY	SUB	CATALOG	MFG	DESCRIPTION
	TB1	42		1492-W3	AB	TERMINAL BLOCK/STRIP FEED-THROUGH 20AMPS 600V, #14-#22 WIRE RANGE GRAY COLOUR
1	PAN-01	1		G2X3WH6	PANDUIT	WIDE FINGER, SLOTTED WIRING DUCT 2.25 x 3.12 SLOTTED WHITE LEAD-FREE PVC, STANDARD MOUNTING HOLES
2	PAN-02	1		G2X3WH6	PANDUIT	WIDE FINGER, SLOTTED WIRING DUCT 2.25 x 3.12 SLOTTED WHITE LEAD-FREE PVC, STANDARD MOUNTING HOLES
3	PAN-03	1		G2X3WH6	PANDUIT	WIDE FINGER, SLOTTED WIRING DUCT 2.25 x 3.12 SLOTTED WHITE LEAD-FREE PVC, STANDARD MOUNTING HOLES
4	DIN-1	1		199-DR1	AB	ZINC/STEEL DIN RAIL EN 50022 (35mm x 7.5mm x 1m) 35mm x 7.5mm SLOTTED
5	DIN-2	1		199-DR1	AB	ZINC/STEEL DIN RAIL EN 50022 (35mm x 7.5mm x 1m) 35mm x 7.5mm SLOTTED
6	CR300	1		700-CF310ZJ	AB	CF TYPE RELAY, 4 POLE, DC COIL, STANDARD CONTACTS TYPE CF 24VDC 3 NO 1 NC 24VDC, STANDARD, RATING: 5A
7	PLC	1		1756-L1	AB	1756 CONTROL LOGIX PROCESSORS LOGIX5550 1756 PROCESSOR CONTROL LOGIX LOGIX5550 PROCESSOR
8	SLOT 1	1		1756-IB16	AB	1756 CONTROL LOGIX PLC DIGITAL DC INPUT MODULE 1756 DISCRETE INPUT 24 VDC 16 INPUTS (2 SETS OF 8); 24 SOURCE LOAD RTB: 1756-TBNH; 1756-TBSH
9	SLOT 2	1		1756-OB16I	AB	1756 CONTROL LOGIX PLC DIGITAL DC OUTPUT MODULE 1756 DISCRETE OUTPUT 12/24 VDC 16 INDIVIDUALLY ISOLATED OUTPUTS; 12/24 SOURCE RTB: 1756-TBCH; 1756-TBS6H
10	SLOT 3	1		1756-ENET	AB	1756 CONTROL LOGIX COMMUNICATION INTERFACE MODULE 1756 COMMUNICATION I/O COMMUNICATION MODULE ETHERNET
11	PS02	1		1769-PB2	AB	1769 MICRO LOGIX 1500 COMPACT I/O MODULE 1769 POWER SUPPLY 24VDC POWER SUPPLY
12	PS01	1		1756-PA72	AB	1756 CONTROL LOGIX POWER SUPPLY 1756 POWER SUPPLY INPUT VOLTAGE: 120 VAC OR 220 VAC

Figure P2-27 *The panel Bill of Material report*

This page is intentionally left blank