Chapter 6

Schematic Editing

Learning Objectives

After completing this chapter, you will be able to:

- *Use basic schematic editing commands*
- *Update components from catalog database*
- *Update a schematic component from a one-line component*
- *Toggle between the normally open and normally closed contacts and vice-versa*
- *Copy the catalog assignment and location values from one component to multiple components*
- *Use auditing tools to find out errors in the project and rectify them*
- *Retag the drawings*
- *Use the tools for editing attributes*

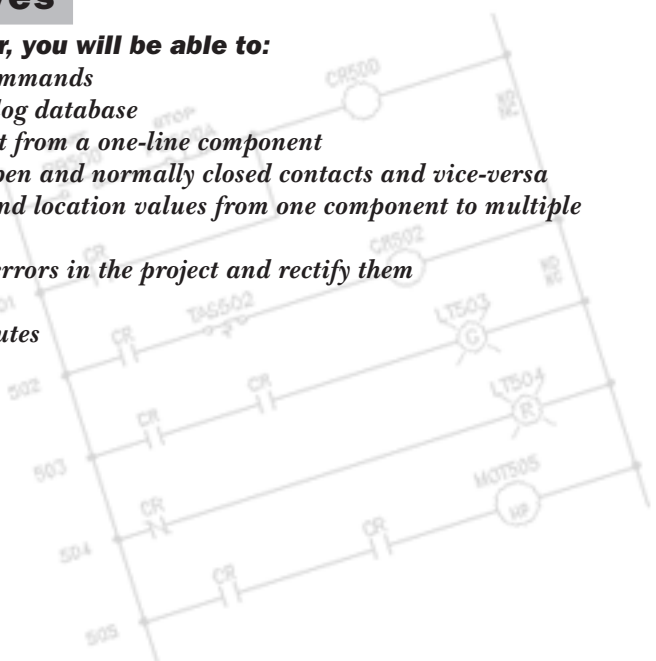

INTRODUCTION

In this chapter, you will learn about different tools that are used to create or modify electrical schematic drawings. You can edit, move, copy, and align components in your drawing. These tools are very important as they provide extra functionalities to electrical schematic drawings. Also, later in this chapter, you will learn about surfing of components, auditing tools, editing tools of attributes, and retagging of drawings.

CHANGING THE COMPONENT LOCATION WITH SCOOT TOOL

Ribbon:	Schematic > Edit Components > Modify Components drop-down > Scoot
Toolbar:	ACE:Main Electrical > Scoot or ACE:Scoot > Scoot
Menu:	Components > Scoot
Command:	AESCOOT



The **Scoot** tool is used to move objects such as components, terminals, PLC I/O modules, signal arrows, wire segments, wires with wire crossing-loops, ladder rungs, ladder buses, and so on in the drawing. The **Scoot** tool is similar to the AutoCAD **Move** tool. However, the **Scoot** tool has intelligence about electrical objects, which enables you to reposition electrical objects. Also, this tool is used to reconnect wires after repositioning the components. To scoot components, choose the **Scoot** tool from the **Modify Components** drop-down in the **Edit Components** panel of the **Schematic** tab, as shown in Figure 6-1; you will be prompted to select component, wire, or wire number for scoot. Select the component to scoot along with its connected wire; a temporary graphic indicating that you have selected the component will be displayed. Next, move the cursor to a place where you want to locate the component; the selected object will move in the orthogonal direction to the specified location.

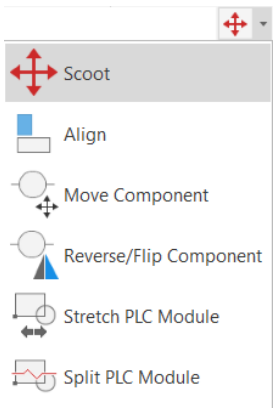

Figure 6-1 *The* ***Modify Components*** *drop-down*

Also, the wires will be reconnected after you scoot the components, the components will be updated, and the existing wire numbers will be recentered. Next, press ESC or click on the screen to exit the command.

Figures 6-2(a) and 6-2(b) show the components and wires before and after scooting.

If you move components to a location that requires component updates, the **Component(s) Moved** dialog box will be displayed, as shown in Figure 6-3. The options in this dialog box are discussed next.

OK to Retag

Choose the **OK to Retag** button to retag the components automatically. Now, if the moved component is linked to other components in the current drawing, the **AutoCAD** message box will be displayed, as shown in Figure 6-4. Choose the **OK** button to update the related component in the drawing.

Evaluation Copy. Do not reproduce. For information visit www.cadcim.com

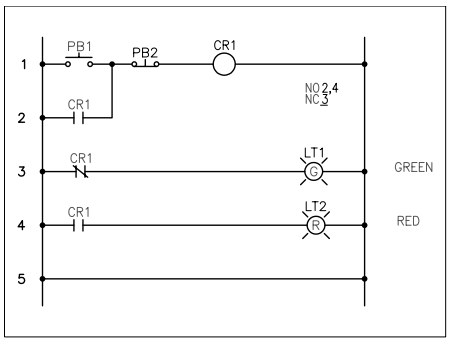

Figure 6-2(a) *Components and wires before scooting*

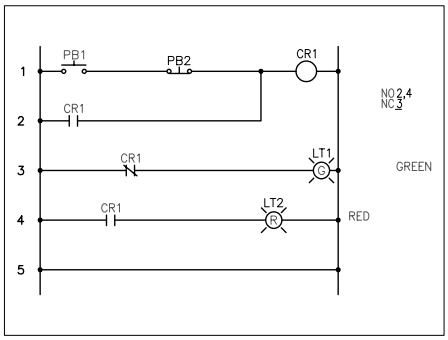

Figure 6-2(b) *Components and wires after scooting*

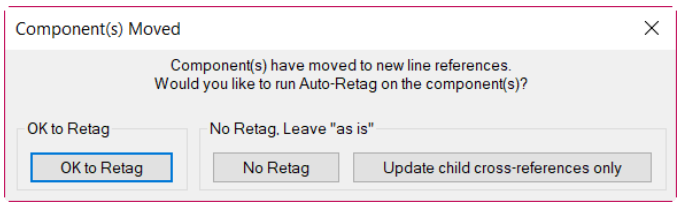

Figure 6-3 *The **Component(s) Moved** dialog box*

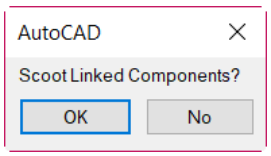

Figure 6-4 *The **AutoCAD** message box*

Also, if the component that you have moved consists of child components or related panel components in the other drawings of the active project, the **Update other drawings?** message box will be displayed, as shown in Figure 6-5. Choose the **OK** button from the **Update other drawings?** message box to batch process or update the other drawings of a project.

Choose the **Task** button to save all modifications in the task list to be run later. The task list is maintained inside the project task list database file (project_update.mdb). You can access this list by choosing the **Project Task List** button from the **PROJECT MANAGER**. Choose the **Skip** button to skip the batch process.

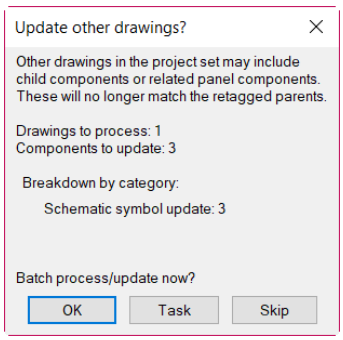

Figure 6-5 *The **Update other drawings?** message box*

Evaluation Copy. Do not reproduce. For information visit www.cadcim.com

Note

*If the moved component does not have related components in the current drawing, the **Update other drawings?** message box will be displayed directly after choosing the **OK to Retag** button from the **Component(s) Moved** dialog box.*

*If the moved component has related components in the current drawing as well as in the other drawings of the project, the **Update other drawings** message box will be displayed after choosing the **Yes-Update** button in the **Update Related Component?** message box.*

No Retag

If you do not want to retag a component, choose the **No Retag** button.

Update child cross-references only

Choose the **Update child cross-references only** button to update only the child cross-references.

Note

*If you select a wire segment that contains components to scoot, the entire wire along with its components and bus will be scooted. If they move to a new line reference, you can auto-retag components by choosing the **OK to Retag** button from the **Component(s) Moved** dialog box.*

CHANGING COMPONENT LOCATIONS USING THE MOVE COMPONENT TOOL

Menu:	Schematic > Edit Components > Modify Components drop-down > Move Component
Toolbar:	ACE:Main Electrical > Scoot > Move Component or ACE:Scoot > Move Component
Menu:	Components > Move Component
Command:	AEMOVE



The **Move Component** tool is used to move the selected component from its current location or wire location to the specified location. To do so, choose the **Move Component** tool from the **Modify Components** drop-down in the **Edit Components** panel of the **Schematic** tab, refer to Figure 6-1; you will be prompted to select a component to move. Select the component; you will be prompted to specify insertion point. Specify the insertion point for the component; the selected component will be moved to the specified location, the underlying wires will be reconnected, and the component tags will be updated automatically. Figures 6-6(a) and 6-6(b) show the components before and after they are moved.

If you move objects to a location that needs component updates, the **Component(s) Moved** dialog box will be displayed, refer to Figure 6-3. The options in this dialog box have been discussed earlier.

Evaluation Copy. Do not reproduce. For information visit www.cadcim.com

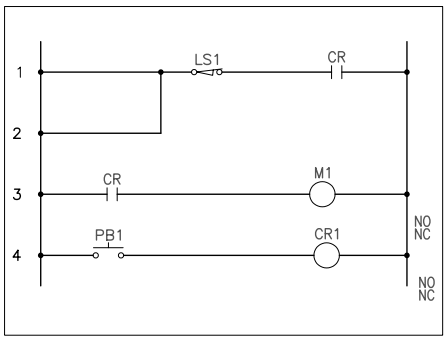

Figure 6-6(a) *Components before using the* ***Move Component*** *tool*

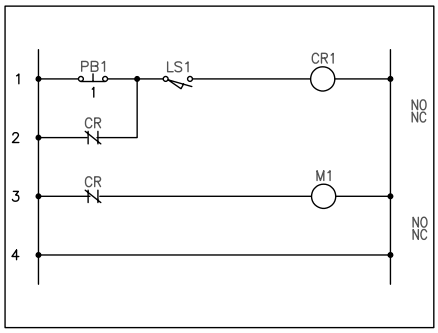

Figure 6-6(b) *Components after using the* ***Move Component*** *tool*

COPYING A COMPONENT

Ribbon:	Schematic > Edit Components > Copy Component
Toolbar:	ACE:Main Electrical > Copy Component
Menu:	Components > Copy Component
Command:	AECOPYCOMP

The **Copy Component** tool is used to copy the selected component and insert the copied component to the specified location in the drawing. To do so, choose the **Copy Component** tool from the **Edit Components** panel of the **Schematic** tab; you will be prompted to select the component to copy. Select the component to be copied; you will be prompted to specify the insertion point for the copied component. Specify the insertion point; the **Insert / Edit Component** dialog box will be displayed, as shown in Figure 6-7. The options in this dialog box have already been discussed in Chapter 5.

Next, enter the required values in this dialog box and choose the **OK** button; the values along with the copied component will be displayed in your drawing. If you do not change the values displayed in the **Insert / Edit Component** dialog box, the values of the original component will be transferred to the copied component. Also, the copied component will be retagged automatically and wire numbers will get updated accordingly.

Note

1. If the selected component that you want to copy is a child component, the ***Insert / Edit Child Component*** *dialog box will be displayed instead of the* ***Insert / Edit Component*** *dialog box.*

2. You can also copy the components using the ***COPY*** *command of AutoCAD, but in this case, the components will not get retagged and the wires will not get reconnected automatically.*

Evaluation Copy. Do not reproduce. For information visit www.cadcim.com

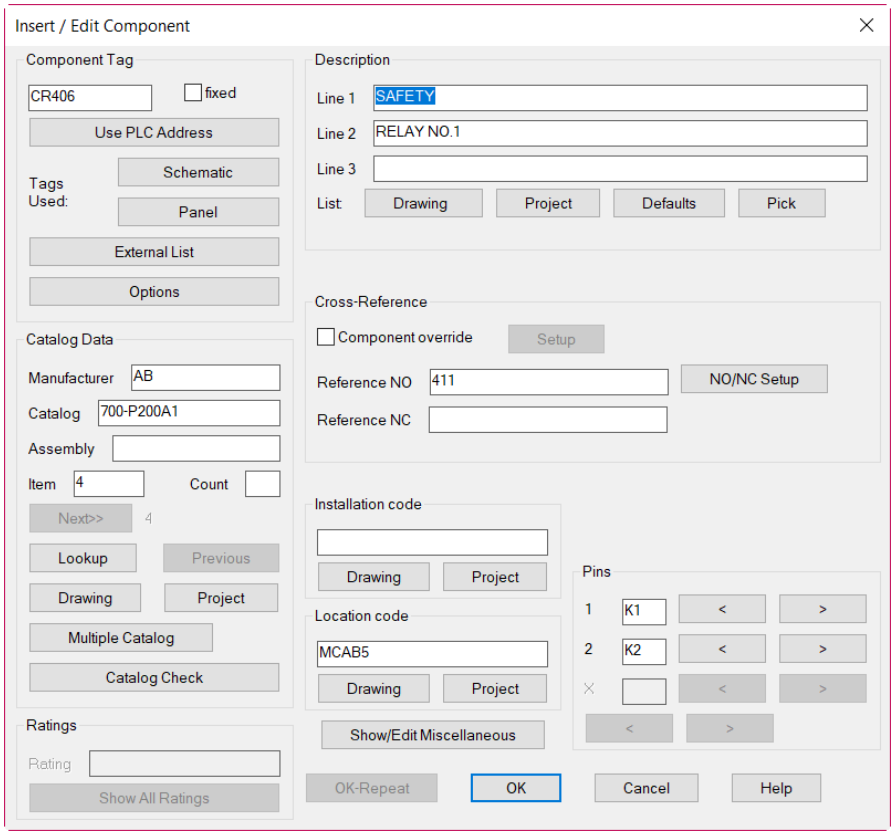

Figure 6-7 *The* ***Insert / Edit Component*** *dialog box*

ALIGNING COMPONENTS

Ribbon:	Schematic > Edit Components > Modify Components drop-down > Align
Toolbar:	ACE:Main Electrical > Scoot > Align or ACE:Scoot > Align
Menu:	Components > Align
Command:	AEALIGN

The **Align** tool is used to line up components vertically or horizontally. To do so, choose the **Align** tool from the **Modify Components** drop-down in the **Edit Components** panel of the **Schematic** tab; you will be prompted to select the components to be aligned. Select the components; a temporary line passing through the center of the component will be displayed. This component is treated as the reference or master component with which you need to align the rest of the components that you select. Next, select the components to align with the master component and then press ENTER; all the selected components will be aligned to the master component.

Figure 6-8 (a) shows the components before alignment, Figure 6-8 (b) shows the master component along with a dashed line, and Figure 6-8 (c) shows the components after alignment.

Evaluation Copy. Do not reproduce. For information visit www.cadcim.com

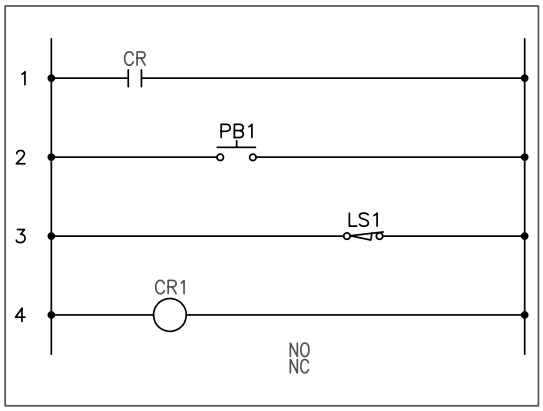

Figure 6-8(a) Components before alignment

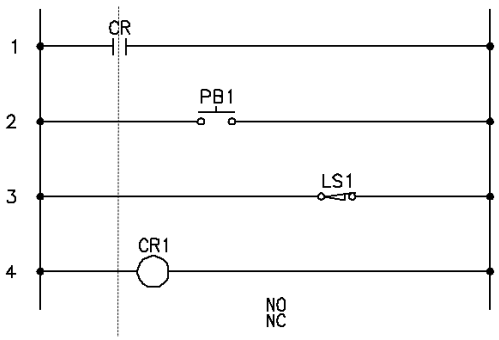

Figure 6-8 (b) The master component along with a dashed line

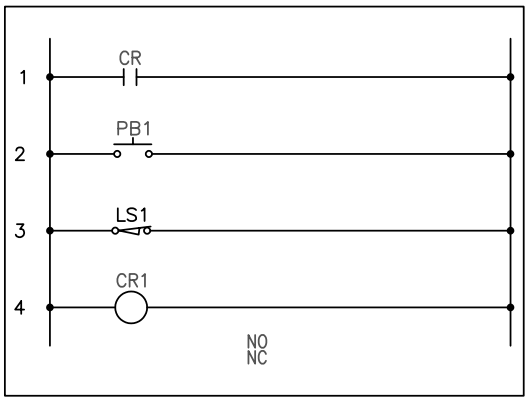

Figure 6-8(c) Components after alignment

DELETING COMPONENTS

Ribbon:	Schematic > Edit Components > Delete Component
Toolbar:	ACE:Main Electrical > Delete Component
Menu:	Components > Delete Component
Command:	AEERASECOMP



The **Delete Component** tool is used to delete a component from the drawing. Also, after deleting the component, the wires get reconnected and the wire numbers get updated. To delete a component, choose the **Delete Component** tool from the **Edit Components** panel of the **Schematic** tab from the menu bar; you will be prompted to select components. Select the component(s) and press the ENTER key or right-click on the screen; the component(s) will be deleted.

If you select a parent component that has child contacts, the **Search for / Surf to Children?** dialog box will be displayed, as shown in Figure 6-9.

Evaluation Copy. Do not reproduce. For information visit www.cadcim.com

Choose the **No** button in the **Search for / Surf to Children?** dialog box to delete the component. If you choose the **OK** button, the **QSAVE** message box will be displayed, as shown in Figure 6-10.

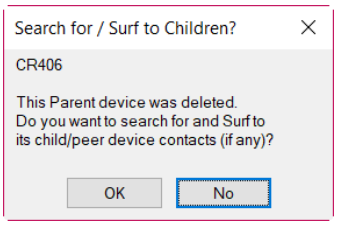

***Figure 6-9** The **Search for / Surf to Children?** dialog box*

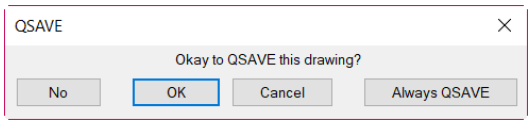

***Figure 6-10** The **QSAVE** message box*

Next, choose the **OK** button from the **QSAVE** message box; the active drawing will be saved. After choosing the **OK** button, the component will be deleted and the drawing will be updated. But if the selected component has its references in the current drawing and you choose the **OK** button in the **QSAVE** message box, the **Surf** dialog box will be displayed. The options in this dialog box are used to modify or delete the related components. The options in the **Surf** dialog box are discussed later in this chapter.

If you choose the **No** button from the **QSAVE** message box, the drawing will not be saved and the component will be deleted. But if the selected component has its references in the current drawing and you choose the **No** button in the **QSAVE** message box, the **Surf** dialog box will be displayed. The options in this dialog box are discussed in detail in the later section.

If you choose the **Always QSAVE** button, AutoCAD Electrical will save the active drawing for that session without displaying the **QSAVE** message box each time.

If you choose the **Cancel** button, the component will be deleted and the references of the component will not be displayed.

UPDATING COMPONENTS FROM CATALOG DATABASE

Ribbon:	Project > Other Tools > Component Update From Catalog
Menu:	Projects > Extras > Component Update From Catalog
Command:	AEUPDFROMCAT

You have already learned in detail about assigning catalog values to a component from the catalog database in Chapter 5. If these values are changed later in the catalog database, you can update them using the **Component Update From Catalog** tool. You can create two reports using this feature: Error Exception Report and Components Updated From Catalog Report. To generate these reports, choose the **Component Update From Catalog** tool from the **Other Tools** panel of the **Project** tab; the **Component Update From Catalog** dialog box will be displayed, as shown in Figure 6-11. The options in this dialog box that are used to generate these two reports are discussed next.

Evaluation Copy. Do not reproduce. For information visit www.cadcim.com

Update Components on Area

Select the **Project** radio button in this area and choose **OK**; the **Select Drawing to Process** dialog box will be displayed. Select the drawings for which you want updates for the component catalog values and choose the **Process** button; the selected drawings will be transferred from the top list to the bottom list of this dialog box. Next, choose **OK** from this dialog box; the **Error Exception Report** dialog box will be displayed, refer to Figure 6-12. This dialog box contains three columns: **Component**, **Location**, and **Comment** in which the list of exceptions, if any, are displayed for the selected drawings. It also includes all pinlist updates for surfing the child contacts. You can then manually update the child contacts per drawing. When you choose the **Components** button at the bottom left of this dialog box, the **Components Updated From Catalog Report** dialog box is displayed. This dialog box provides the details of the component name, its location, data updated, previous data, and current data per drawing, as shown in Figure 6-13.

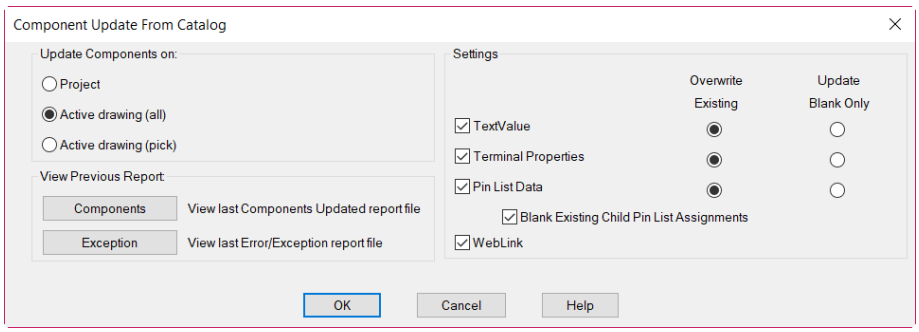

Figure 6-11 *The* ***Component Update From Catalog*** *dialog box*

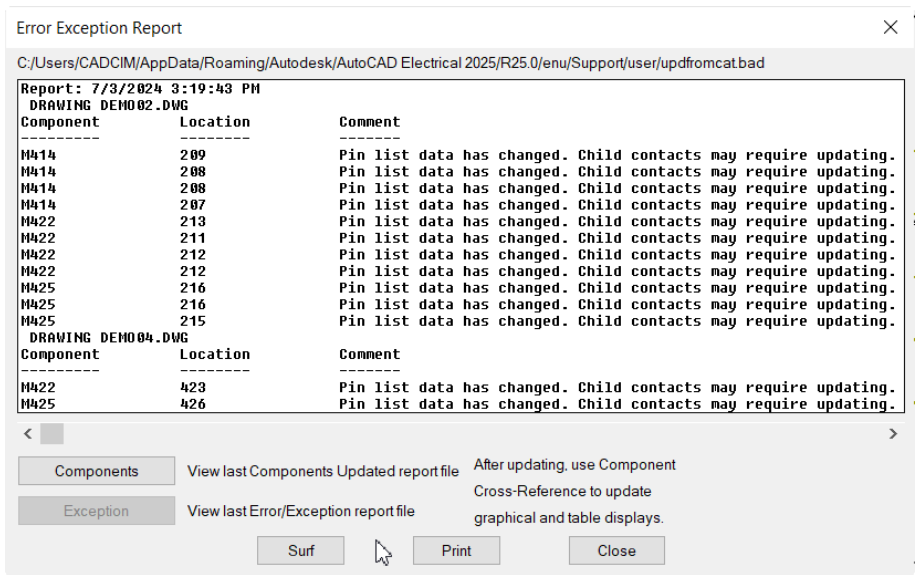

Figure 6-12 *The* ***Error Exception Report*** *dialog box*

Choose the **Surf** button; the **Surf** dialog box will be displayed. The options in this dialog box are discussed in detail in the later section. You can also print the data by choosing the **Print** button.

Evaluation Copy. Do not reproduce. For information visit www.cadcim.com

When you select the **Active drawing(all)** radio button and then choose **OK** in the **Component Update From Catalog** dialog box, an error exception report only for the active drawing is displayed in the **Error Exception Report** dialog box. Similarly, if you choose the **Components** button in this dialog box, the **Components Updated From Catalog Report** dialog box will be displayed. It provides the details of the component name, its location, data updated, previous data, and current data for the active drawing only.

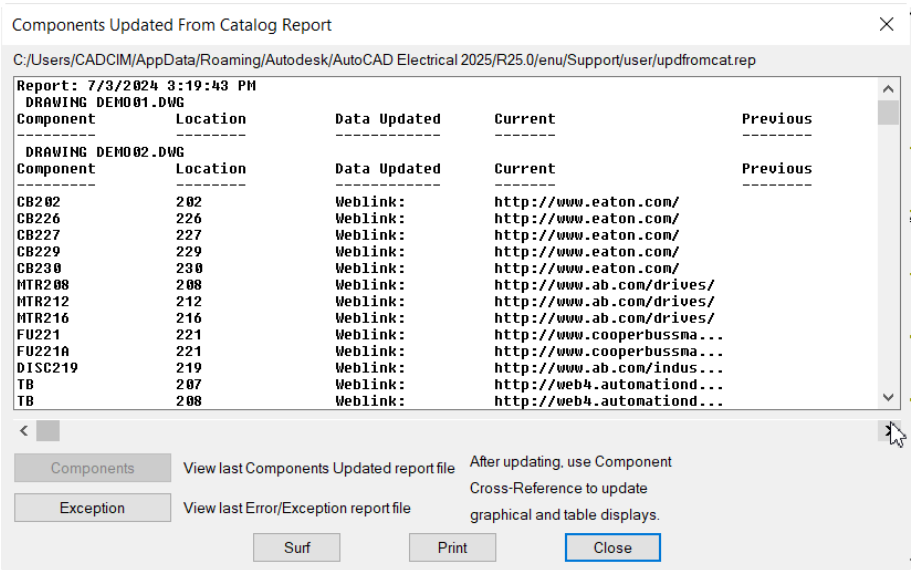

***Figure 6-13** The **Components Updated From Catalog Report** dialog box*

Select the **Active drawing(pick)** radio button if you want to get the error exception report and component updation report for a specific component.

View Previous Report Area

In this area, choose the **Components** button to view the report of the component updates from the previous use of this feature. Similarly, choose the **Exception** button to view the previous exception report.

Settings Area

The options in this area are discussed next.

TextValue

By default, the **TextValue** check box is selected. As a result, the attribute values assigned by the current TextValue are updated in the catalog database for the catalog number. These values overwrite the existing values as the **Overwrite Existing** radio button next to this check box is selected by default. If you want to retain the existing values, you can select the **Update Blank Only** radio button.

Evaluation Copy. Do not reproduce. For information visit www.cadcim.com

Terminal Properties

By default, the **Terminal Properties** check box is selected. As a result, the terminal properties are updated on the terminal to match the value in the catalog database for the assigned catalog number. Note that the related terminals on other drawings are also updated to keep consistency in all the terminals. If you want to retain the existing values, you can select the **Update Blank Only** radio button.

Pin List Data

By default, the **Pin List Data** check box is selected. As a result, pinlist value on the schematic parent is updated so as to match the value in the catalog database for the assigned catalog number. If you want to retain the existing values, you can select the **Update Blank Only** radio button. Note that the child contact pins are not updated here. Make sure that the **Blank Existing Child Pin Assignments** radio button below this check box is selected so that the manual pin assignment becomes easier. Also, note that when you choose the **Surf** button in the **Error Exception Report** dialog box, the **Surf** dialog box is displayed. This dialog box provides the list of child contacts of the parents for which the pinlist data is updated.

WebLink

If you select this check box, weblink value of the component is updated to match the value in the catalog database for the assigned catalog number.

UPDATING A SCHEMATIC COMPONENT FROM A ONE-LINE COMPONENT

You can update a schematic component from a one-line component. In other words, you can copy information such as descriptions, catalog values, installation/location codes, and so on from a one-line component to a schematic component. To do so, choose the **Edit** tool from the **Edit Components** drop-down in the **Edit Components** panel of the **Schematic** tab and select the schematic component to be updated from the active drawing; the **Insert/Edit Component** dialog box will be displayed. In this dialog box, choose the **Schematic** button from the **Component Tag** area; the **XX Tags in Use** dialog box will be displayed. Note that **XX** stands for the schematic component to be updated. In this dialog box, select the **Show one-line components (1-*)** check box from the **Show** area; one-line components will be displayed along with the other components, refer to Figure 6-14.

Next, select the desired one-line component from the list. Also, select the check boxes in the **Copy** area based on the requirement and choose the **Copy Tag** button; the **Copy Tag** dialog box will be displayed, refer to Figure 6-15. Choose the **OK** button from this dialog box; the **Copy Tag** dialog box will disappear and the **Insert/Edit Component** dialog box will be displayed with the updated values of the schematic component. Choose the **OK** button in this dialog box to update the schematic component from a one-line component.

Evaluation Copy. Do not reproduce. For information visit www.cadcim.com

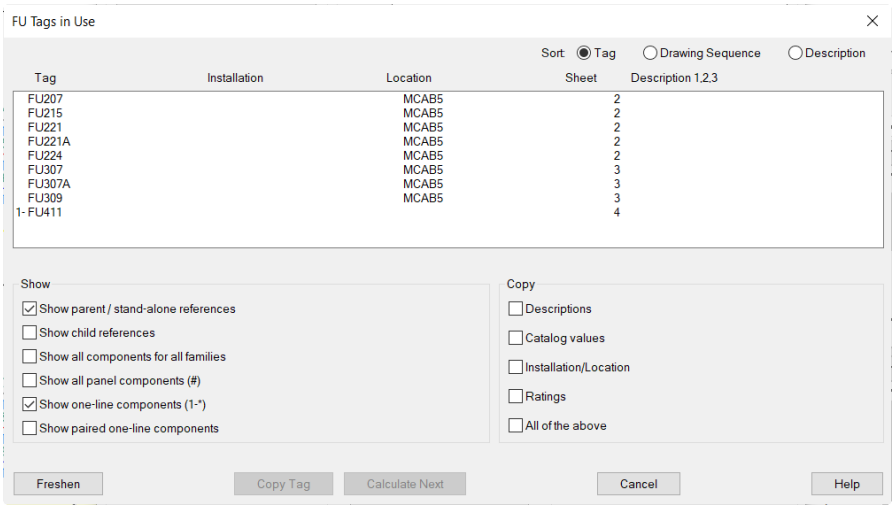

Figure 6-14 *The* ***FU Tags in Use*** *dialog box*

The **Show paired one-line components** check box is available in the **Show** area of the **XX Tags in Use** dialog box. You need to select this check box along with the **Show one-line components (1-*)** check box and the **Show parent / stand-alone references** check box to show pair of matching one-line components with schematic or panel component.

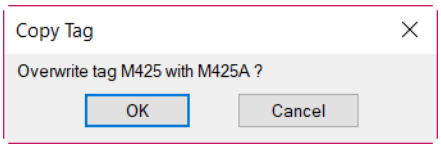

Figure 6-15 *The* ***Copy Tag*** *dialog box*

SURFING A REFERENCE

Ribbon:	Project > Other Tools > Surfer drop-down >Surfer
Toolbar:	ACE:Main Electrical 2 > Surfer or ACE:Surfer
Menu:	Projects > Surfer
Command:	AESURF



The **Surfer** tool is used to search the related references of a component, wire number, terminal, cables, and signal. Using this tool, you can move from one reference to another across the drawings of a project. This tool is also used to search component tag, wire number, item number or catalog number. To search the related references of a component, choose the **Surfer** tool from the **Other Tools** panel of the **Project** tab; you will be prompted to select the tag for surfer trace. Select the component or the component tag; the **Surf** dialog box will be displayed, as shown in Figure 6-16.

This dialog box displays the name of component, manufacturer code, and catalog number of the selected component at the top. Different options in this dialog box are discussed next.

Evaluation Copy. Do not reproduce. For information visit www.cadcim.com

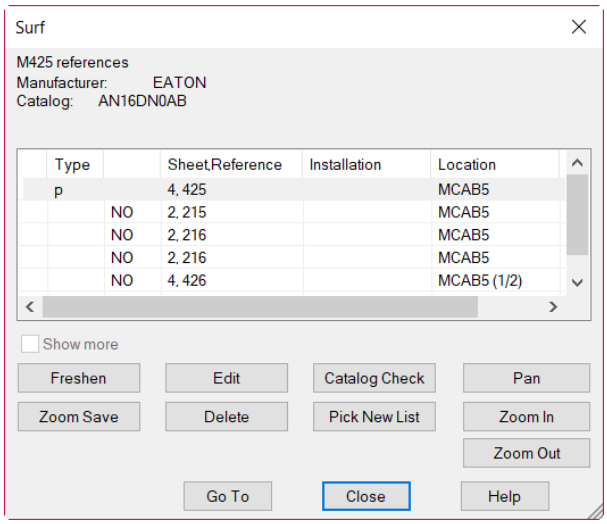

Figure 6-16 *The* ***Surf*** *dialog box*

Type

Different codes for different type of symbols are displayed in the **Type** column. These codes are:

c - Component symbol
p - Parent symbol or one-line symbol. Note that in case of one-line symbol, '1-' will be displayed in the **Category** column in the **Surf** dialog box
t - Terminal symbol
w - Wire number
- Panel symbol
#np - Panel nameplate
Dst - Destination arrow
Src - Source arrow

Sheet,Reference

This column displays the sheet number and line reference number of the component.

Installation

This column displays the installation value of the selected component.

Location

This column displays the location value of the selected component.

Category

The category of the selected component is displayed in the **Category** column such as '1-' in case of one-line symbols.

Evaluation Copy. Do not reproduce. For information visit www.cadcim.com

Show more

The **Show more** check box will be activated only when you are in the IEC tagging mode, or if any non-installation/location matching references are not present. Select this check box to display extra non-installation/location matching reference if you are using the IEC tagging mode. By default, the **Show more** check box is clear. As a result, only the exact surf matches in the list will be displayed.

Freshen

The **Freshen** button is used to refresh the **Surf** dialog box with the changes made in the active drawing. To refresh the **Surf** dialog box, select a reference from the list displayed and choose the **Freshen** button; the **QSAVE** message box will be displayed. Next, choose the **OK** button in the **QSAVE** message box to save the changes made in the drawing; the **Surf** dialog box will be displayed again. If you choose the **NO** button from the **QSAVE** message box, the active drawing will not be saved and the **Surf** dialog box will be displayed again.

Edit

The **Edit** button is used to edit the selected reference. On choosing this button, the **Insert / Edit Component** dialog box will be displayed. Using this dialog box, you can edit references. The options in the **Insert / Edit Component** dialog box have been discussed in the earlier chapters.

Catalog Check

The **Catalog Check** button will be activated only if the reference has catalog and manufacturer information added to it. This button is used to display the Bill of Material of the selected reference.

Pan

The **Pan** button allows you to view the portion of the drawing that is outside the current display area.



Note

*When the **Tool Palettes** is docked, the **Pan** button does not work.*

Zoom Save

The **Zoom Save** button is used to save the current zoom factor on the WD_M block of the drawing. To do so, choose the **Zoom Save** button; the Command prompt will display "**Surf zoom factor saved on WD_M block**".

Zoom In

Choose the **Zoom In** button to double the size of the drawing.

Zoom Out

Choose the **Zoom Out** button to decrease the size of the drawing by half.

Pick New List

The **Pick New List** button is used to select a new component to surf.

Evaluation Copy. Do not reproduce. For information visit www.cadcim.com

Go To

Choose the **Go To** button to go to the reference of the selected component. This button zooms the selected component. If the component is in a different drawing, the drawing that is opened will be saved and other drawing where the component is located will be opened and the selected component will be zoomed. Also note that when you select the reference from the list displayed and choose the **Go To** button, the selected reference will be zoomed and in the **Surf** dialog box, 'x' will be displayed in the left of the **Type** column.

Close

Choose the **Close** button to close the **Surf** dialog box.

Note

*If you select the source or destination symbols in the drawing using the **Surfer** tool, then the **Surf** dialog box will look a little different. However, the options will remain the same.*

TOGGLING BETWEEN NORMALLY OPEN AND NORMALLY CLOSED CONTACTS

Ribbon:	Schematic > Edit Components > Toggle NO/NC
Toolbar:	ACE:Main Electrical > Toggle NO/NC
Menu:	Components > Toggle NO/NC
Command:	AETOGGLENONC

The **Toggle NO/NC** tool is used to toggle contacts from normally open to normally closed and vice-versa. In other words, this tool is used to flip contacts from one state to another (open/closed). To toggle between contacts, choose the **Toggle NO/NC** tool from the **Edit Components** panel of the **Schematic** tab; you will be prompted to select the component to toggle NO/NC. Select the component; you will notice that if the component is normally open (NO), it will change to normally closed (NC) and vice versa. Also, the attribute information will be extracted from the selected component and the component data will be copied onto the replacement symbol. The command will continue till you press ENTER or right-click on the screen.

Figures 6-17 (a) and 6-17 (b) show the contacts of components before and after toggling.

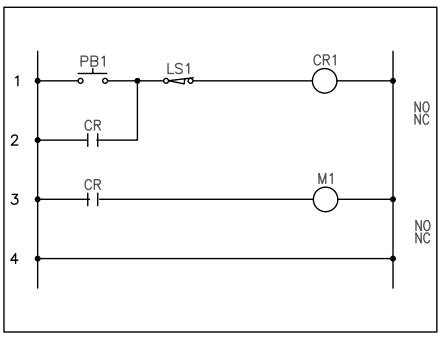

Figure 6-17(a) *Contacts of components before toggling*

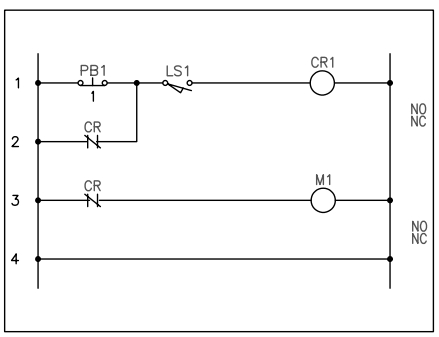

Figure 6-17(b) *Contacts of components after toggling*

Evaluation Copy. Do not reproduce. For information visit www.cadcim.com

COPYING THE CATALOG ASSIGNMENT

Ribbon:	Schematic > Edit Component > Edit Components drop-down > Copy Catalog Assignment
Toolbar:	ACE:Main Electrical > Edit Component > Copy Catalog Assignment or ACE:Edit Component > Copy Catalog Assignment
Menu:	Components > Component Miscellaneous > Copy Catalog Assignment
Command:	AECOPYCAT



The **Copy Catalog Assignment** tool is used to copy the catalog part numbers from one component to another. Also, this tool is used to insert or edit the catalog data of the selected component or footprint. This tool helps in assigning the same catalog information to multiple components. To copy manufacturer, catalog, assembly, and multiple catalog attributes from one component to other selected components, choose the **Copy Catalog Assignment** tool from the **Edit Components** drop-down in the **Edit Components** panel of the **Schematic** tab, as shown in Figure 6-18; you will be prompted to select the master component. Select the component to be treated as master component; the **Copy Catalog Assignment** dialog box will be displayed, as shown in Figure 6-19. This dialog box displays the catalog data of the selected component.



Note

*If the catalog assignment is not assigned to the master component, the **Copy Catalog Assignment** dialog box will not display any catalog data. Also, if you want to modify the catalog assignment both for the master and child components, choose the **Catalog Lookup** button from the **Copy Catalog Assignment** dialog box. On doing so, the **Catalog Browser** dialog box will be displayed. Next, select the desired catalog information and then choose the **OK** button from this dialog box; the catalog data will be assigned to the selected component.*

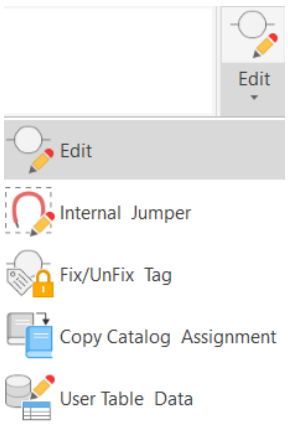

***Figure 6-18** The **Edit Component**s drop-down*

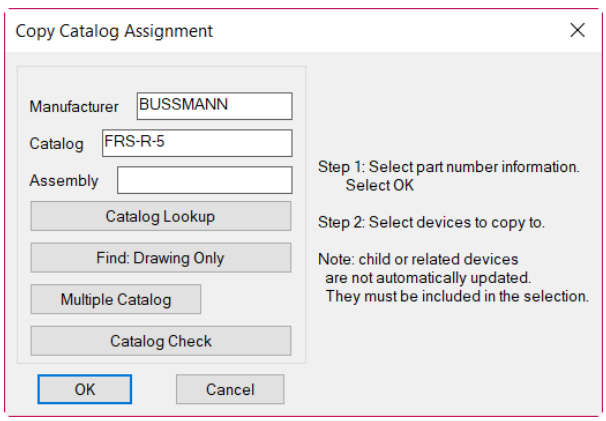

***Figure 6-19** The **Copy Catalog Assignment** dialog box*

Evaluation Copy. Do not reproduce. For information visit www.cadcim.com

The options in the **Copy Catalog Assignment** dialog box are discussed next.

Manufacturer

In the **Manufacturer** edit box, the manufacturer data of the master component is displayed. You can edit the manufacturer data or enter new data by choosing the **Catalog Lookup** button, which is discussed later in this chapter.

Catalog

The **Catalog** edit box displays the catalog data of the master component. If it is not displayed, you can enter it by choosing the **Catalog Lookup** button and then selecting the desired catalog.

Assembly

The **Assembly** edit box is used to display the assembly code of the master component.

Catalog Lookup

Choose the **Catalog Lookup** button from the **Copy Catalog Assignment** dialog box; the **Catalog Browser** dialog box will be displayed, which has been discussed in the previous chapters. Select the catalog information from the **Catalog Browser** dialog box for the master component and choose the **OK** button; the catalog information will be displayed in the **Manufacturer** and **Catalog** edit boxes.

Find: Drawing Only

The **Find: Drawing Only** button is used to search the symbols of the same family block name within the active drawing. To do so, choose the **Find: Drawing Only** button from the **Copy Catalog Assignment** dialog box; the **xx catalog values (this drawing)** dialog box will be displayed. Note that **xx** stands for the family block name. This dialog box displays catalog information of the symbols of the same family type. Select the catalog values from this dialog box and choose **OK**; the values will be displayed in the **Manufacturer** and **Catalog** edit boxes of the **Copy Catalog Assignment** dialog box.

Multiple Catalog

The **Multiple Catalog** button is used to add extra catalog information to the selected component. Also, this button is used to verify the catalog information. To add extra catalog information, choose the **Multiple Catalog** button; the **Multiple Bill of Material Information** dialog box will be displayed. In this dialog box, you can add extra catalog information. You can add up to 99 additional part numbers to any schematic or panel component. Specify the required options in this dialog box and then choose the **OK** button to return to the **Copy Catalog Assignment** dialog box; the extra catalog assignment will be displayed adjacent to the **Multiple Catalog** button.

Catalog Check

The **Catalog Check** button is used to check for the catalog information of the selected component. To do so, choose the **Catalog Check** button; the **Bill Of Material Check** dialog box will be displayed. It displays the Bill Of Material of the master component.

Evaluation Copy. Do not reproduce. For information visit www.cadcim.com

After specifying the options in the **Copy Catalog Assignment** dialog box, choose the **OK** button; you will be prompted to pick the target component(s). Select the target component(s) and press ENTER; the catalog information will be copied to the target component(s). If the target component consists of catalog data different from the master component, the **Different symbol block names** dialog box will be displayed, as shown in Figure 6-20. If you choose the **OK** button, the **Caution: Existing Data on Target** dialog box will be displayed, as shown in Figure 6-21. Different options in this dialog box are discussed next.

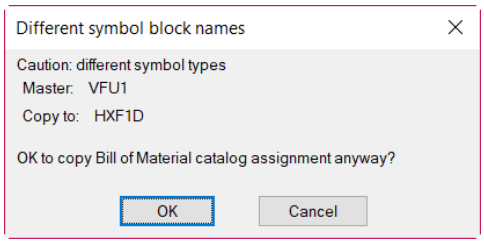

Figure 6-20 *The* ***Different symbol block names*** *dialog box*

The **Catalog Check** button is used to display the catalog information of the master and target component(s).

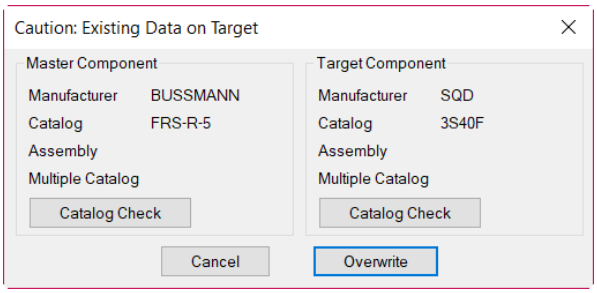

Figure 6-21 *The* ***Caution: Existing Data on Target*** *dialog box*

To overwrite the catalog information of the master component to the target component(s), choose the **Overwrite** button; the catalog information of the master component will be applied to the target component(s). But if the target component has its child contacts or references, then after choosing the **Overwrite** button, the **Update Related Components?** message box will be displayed. In this message box, choose the **Yes-Update** button; the related components will be updated. Choose the **Skip** button to skip the update of the related components.

EDITING USER TABLE DATA RECORDS

Ribbon:	Schematic > Edit Components > User Table Data
Toolbar:	ACE:Edit Component > Edit User Table Data
Menu:	Components > Component Miscellaneous > Edit User Table Data
Command:	AEUSERTABLE



The **Edit User Table Data** tool is used to add user data records or edit the existing user data records in the user database table of the project database file. To add or edit the user table data, choose the **User Table Data** tool from the **Edit Components** drop-down in the **Edit Components** panel of the **Schematic** tab, refer to Figure 6-18; you will be prompted to select a component. Select the component; the **Edit User Table Data** dialog box will be displayed, as shown in Figure 6-22. If the user data records are available for the selected component, these records will be

Evaluation Copy. Do not reproduce. For information visit www.cadcim.com

displayed in this dialog box. You can select the record to edit or delete it. To add a new record, choose the **Add New** button; the **Add New USER data record** dialog box will be displayed, as shown in Figure 6-23. In this dialog box, enter the new record information in the **Data** edit box and choose the **OK** button; the new record will be added to the user database table and it will also be displayed in the **Edit User Table Data** dialog box.

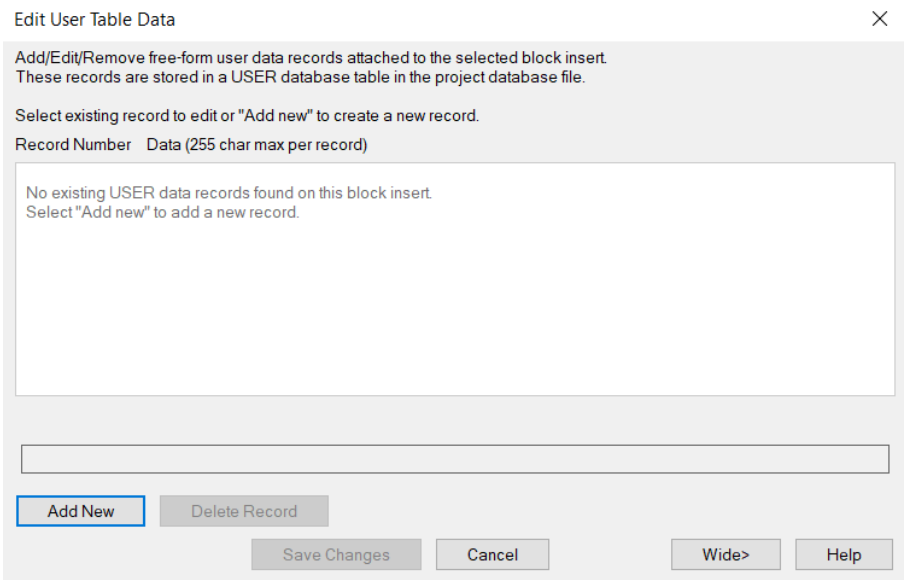

Figure 6-22 *The* ***Edit User Table Data*** *dialog box*

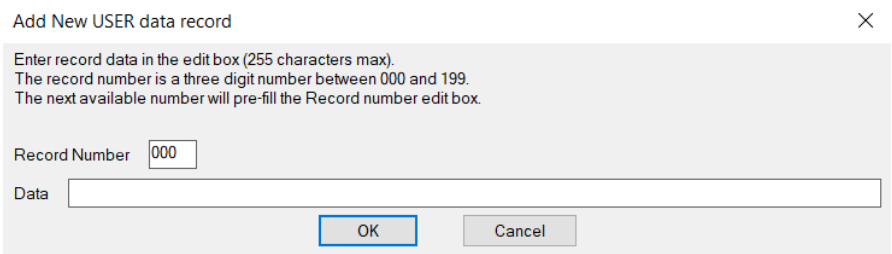

Figure 6-23 *The* ***Add New USER data record*** *dialog box*

COPYING INSTALLATION/LOCATION CODE VALUES

Ribbon:	Schematic > Edit Components > Copy Installation/Location Code Values
Toolbar:	ACE:Main Electrical 2 > Location Symbols drop-down> Copy Installation/Location Code Values or ACE:Location Symbols > Copy Installation/Location Code Values
Menu:	Components > Component Tagging > Copy Installation/Location Code Values
Command:	AECOPYINSTLOC

Evaluation Copy. Do not reproduce. For information visit www.cadcim.com



The **Copy Installation/Location Code Values** tool is used to copy the installation and location code assignments from one component to another. To do so, choose the **Copy Installation/Location Code Values** tool from the **Edit Components** panel of the **Schematic** tab; the **Copy Installation/Location to Components** dialog box will be displayed, as shown in Figure 6-24. Different options in this dialog box are discussed next.

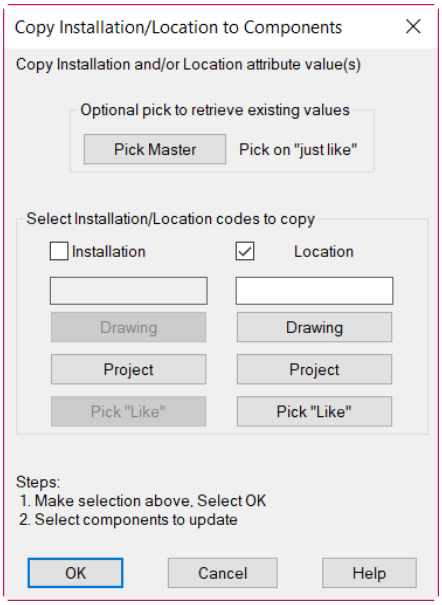

***Figure 6-24** The **Copy Installation/Location to Components** dialog box*

Pick Master

The **Pick Master** button is used to select the master component from where the attributes will be copied. To select the master component, choose the **Pick Master** button; the **Copy Installation/Location to Components** dialog box will disappear and you will be prompted to select the master component to get the installation and location values. Select the component from the drawing; the **Copy Installation/Location to Components** dialog box will be displayed again with the installation and location values of the selected component.

Select Installation/Location codes to copy Area

The options in this area are used to copy the installation and location codes on the selected component that you will select. These options are discussed next.

Installation

Select the **Installation** check box; the edit box below this check box as well as the **Drawing** and the **Pick "Like"** buttons will be activated. Next, enter the installation code that you want to copy from the master component to the other components in the edit box.

Drawing

The **Drawing** button is used to display the list of installation codes present in the active drawing.

Project

The **Project** button is used to display the list of installation codes present in the active project.

Pick "Like"

The **Pick "Like"** button is used to select the component from where installation values are copied.

Location

The **Location** check box is selected by default. As a result, the edit box below this check box as well as the **Drawing**, **Project**, and **Pick "Like"** buttons are active. Enter the location code that you want to copy from the master component in the edit box below the **Location** check box.

Evaluation Copy. Do not reproduce. For information visit www.cadcim.com

Drawing
The **Drawing** button is used to display the list of location codes present in the active drawing.

Project
The **Project** button is used to display the list of location codes present in the active project.

Pick "Like"
The **Pick "Like"** button is used to select the component from where the location values will be copied. To do so, choose the **Pick "Like"** button; you will be prompted to select the component to get the location code. Select the component; the location code will be displayed in the edit box, which is below the **Location** check box.

After specifying the required options in the **Copy Installation/Location to Components** dialog box, choose the **OK** button; you will be prompted to select components. Select the component(s) to copy the installation/location values and press ENTER; the installation/location values will be copied to the selected component.



Note
AutoCAD Electrical does not show any warning if you overwrite existing installation and location codes.

AUDITING DRAWINGS
The auditing tools are used to check errors in the project. These tools help in troubleshooting and improving the accuracy of a drawing. There are two auditing tools: **Electrical Audit** and **Drawing Audit**. These tools are discussed next.

Electrical Auditing

Ribbon:	Reports > Schematic > Electrical Audit
Toolbar:	ACE:Main Electrical 2 > Schematic Reports > Electrical Audit or ACE:Schematic Reports > Electrical Audit
Menu:	Projects > Reports > Electrical Audit
Command:	AEAUDIT



The **Electrical Audit** tool is used to find out the problems that affect the drawings of a project. This tool can be used to correct some of the errors in drawings. To find errors, choose the **Electrical Audit** tool from the **Schematic** panel of the **Reports** tab; the **Electrical Audit** dialog box will be displayed, refer to Figure 6-25. The progress of the electrical audit will be displayed in the edit box. Once the audit is finished, the edit box will display the total number of errors that occurred in the active project. In this dialog box, the **Project** radio button is selected by default. As a result, the total number of errors found in the active project will be displayed in the edit box of the **Electrical Audit** dialog box. If you select the **Active Drawing** radio button, then the total number of errors found in the active drawing will be

Evaluation Copy. Do not reproduce. For information visit www.cadcim.com

displayed in the edit box. This dialog box also displays the date and time of the electrical audit report.

The **Details** button is used to view errors as well as to expand or collapse the **Electrical Audit** dialog box. To view errors, choose the **Details** button; the **Electrical Audit** dialog box will expand and display detailed information about the errors found in the project, refer to Figure 6-26. If you choose this button again, the **Electrical Audit** dialog box will collapse, refer to Figure 6-25.

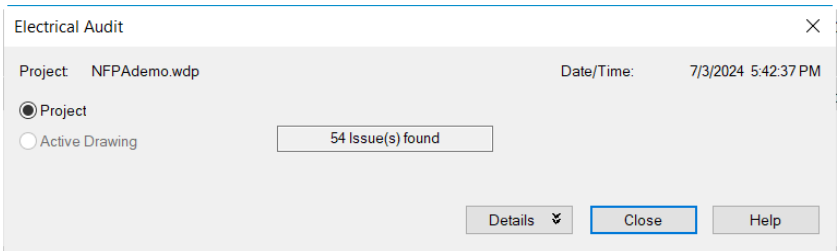

Figure 6-25 *The* ***Electrical Audit*** *dialog box*

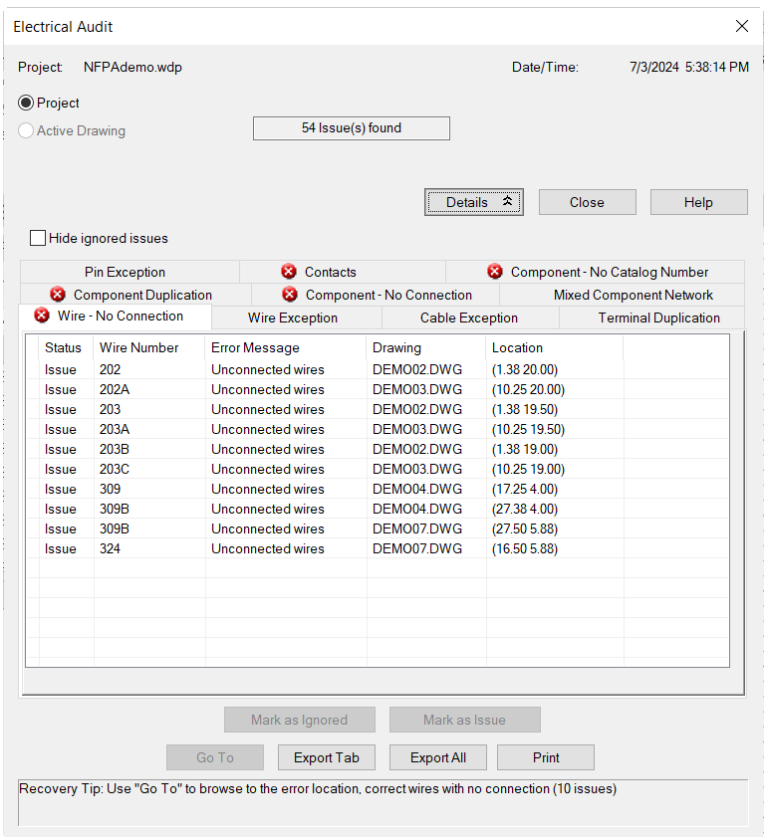

Figure 6-26 *The expanded* ***Electrical Audit*** *dialog box displaying errors on choosing the* ***Details*** *button*

Evaluation Copy. Do not reproduce. For information visit www.cadcim.com



Note

*If the active drawing is not a part of the active project, then the **Active Drawing** radio button will not be activated in the **Electrical Audit** dialog box.*

*If errors are not found in a project or active drawing, then the **Details** button in the **Electrical Audit** dialog box will not be activated.*

The expanded **Electrical Audit** dialog box has ten different tabs. If the tab has a red circle and a white 'x', it means an error is present in that category. To view the errors present in a tab, choose the tab; the information about the errors will be displayed in the lower part of the **Electrical Audit** dialog box.

Different tabs and buttons in the **Electrical Audit** dialog box are discussed next.

Wire - No Connection

By default, the **Wire - No Connection** tab is chosen in the **Electrical Audit** dialog box. This tab displays the disconnected wires that are found in the project. The report list below this tab consists of disconnected wire number, error message, drawing, and the location point where an error occurs. If the wire number record is not found in the drawings of a project, the **Wire Number** column will be blank.

Wire Exception

The **Wire Exception** tab displays the missing or the duplicated wire numbers that are found in an active project.

Cable Exception

The **Cable Exception** tab displays the duplicated cable and the wire ID's that are found in an active project.

Component - No Catalog Number

The **Component - No Catalog Number** tab displays the components that have no catalog data.

Component Duplication

The **Component Duplication** tab displays the duplicated schematic/panel components.

Component - No Connection

The **Component - No Connection** tab displays the component connections with disconnected wires.



Note

*For a schematic component, the corresponding field in the **Category** column is blank.*

Mixed Component Network

The **Mixed Component Network** tab displays components in a wire network that consists of components of different types such as one-line symbols, schematic symbols, and so on. To view the mixed components in a wire network, choose the **Mixed Component Network** tab; the report

Evaluation Copy. Do not reproduce. For information visit www.cadcim.com

list will be displayed containing the tag name of the component (from/to), component type (from/to), error message, and the name of the drawing (from/to) where an error occurs.

Terminal Duplication

The **Terminal Duplication** tab displays the duplicated schematic terminal numbers.

Pin Exception

The **Pin Exception** tab displays the pin assignments of a component that has been duplicated.

Contacts

The **Contacts** tab displays a child component without a parent.

Recovery Tip

The **Recovery Tip** area at the bottom of the **Electrical Audit** dialog box displays the recovery tip to fix an error in the drawing.

Mark as Ignored

The **Mark as Ignored** button will be activated when you select an error from the list. To mark the selected errror as 'Ignored, select the error and then choose the **Mark as Ignored** button; the status for this error will be changed to 'Ignored' in the **Status** column.

Mark as Issue

The **Mark as Issue** button will be activated when you select the error from the list. To mark the errror as 'Issue', select the error and then choose the **Mark as Issue** button; the status for this error will be changed to 'Issue' in **Status** column.

Hide Ignored Issue

The **Hide Ignored Issue** check box is used to remove the enries which are marked as 'Ignored' from the list.

Go To

The **Go To** button takes you to an error location within the project and corrects the error. To go to an error location, select the error from the report list displayed in the **Electrical Audit** dialog box and then choose the **Go To** button. Alternatively, double-click on the error displayed in the **Electrical Audit** dialog box; the current drawing will be saved. Also, the drawing that contains the selected error will be opened and the selected component will be zoomed and highlighted. As the component gets highlighted, it is easier to identify the object with error. Now, you can edit the selected component without closing the **Electrical Audit** dialog box. To do so, right-click on the selected component in the drawing area; a marking menu will be displayed. Choose the required component editing option from the marking menu; the corresponding editing dialog box will be displayed. In this dialog box, specify the required options and then choose the **OK** button to exit the dialog box. Once you go through an error location, an 'x' will appear in the extreme left column of the **Electrical Audit** dialog box.

Export Tab

The **Export Tab** button is used to save the errors in the active tab of the audit report to a text file.

Evaluation Copy. Do not reproduce. For information visit www.cadcim.com

Export All

The **Export All** button is used to save the errors of all the tabs of the audit report to a text file.

Print

The **Print** button is used to print an audit report. On choosing this button, the **Print** dialog box will be displayed, as shown in Figure 6-27. Select the name of the printer from the **Name** drop-down list and then choose the **OK** button; the audit report will be printed.

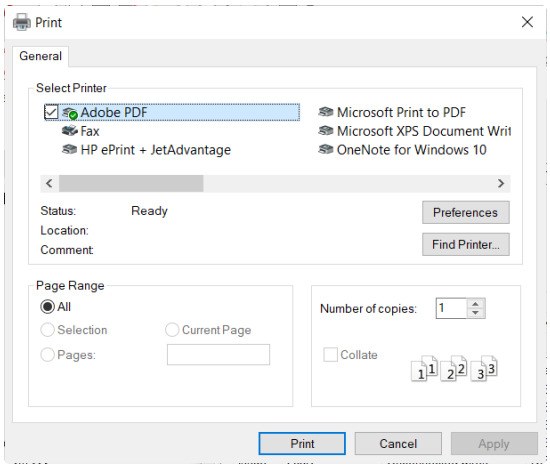

Figure 6-27 *The **Print** dialog box*

Auditing a Drawing

Ribbon:	Reports > Schematic > DWG Audit
Toolbar:	ACE:Main Electrical 2 > Schematic Reports > Drawing Audit or ACE:Schematic Reports > Drawing Audit
Menu:	Projects > Reports > Drawing Audit
Command:	AEAUDITDWG

The **DWG Audit** tool is used to find out the problems in wiring that affect the wire connectivity of a design. Using this tool, you can audit a single drawing or multiple drawings in a project. The auditing of a drawing is performed to check for wire gaps, wire number, color, zero length wires, gauge labels, and wire number floaters for errors, and so on. To find out errors in wires and to rectify them, choose the **DWG Audit** tool from the **Schematic** panel of the **Reports** tab; the **Drawing Audit** dialog box will be displayed, as shown in Figure 6-28. Different options in the **Drawing Audit** dialog box are discussed next.

The **Audit drawing or project** area consists of two radio buttons: **Active drawing** and **Project**. These radio buttons are discussed next.

Auditing an Active Drawing

The **Active drawing** radio button is selected by default and is used to audit an active drawing only. Choose the **OK** button from the **Drawing Audit** dialog box; the modified **Drawing Audit** dialog box will be displayed, as shown in Figure 6-29. The options in the modified **Drawing Audit** dialog box are discussed next.

Evaluation Copy. Do not reproduce. For information visit www.cadcim.com

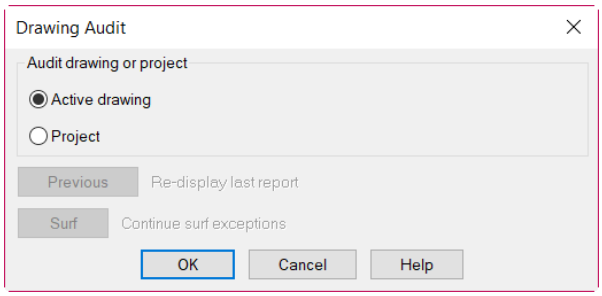

Figure 6-28 *The* ***Drawing Audit*** *dialog box*

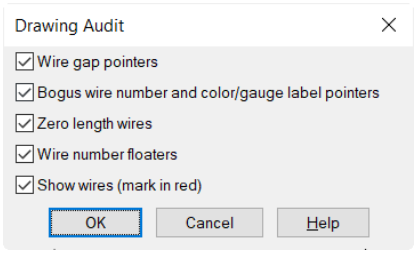

Figure 6-29 *The modified* ***Drawing Audit*** *dialog box*

Wire gap pointers
This check box is used to find out the problems related to the missing wires that were connected through gap pointers.

Bogus wire number and color/gauge label pointers
This check box is used to check for and clean up the wires that have non-existent wire numbers. Also, this check box is used to check for bad color/gauge label pointers.

Zero length wires
This check box is used to check and erase the zero length line entities present on a wire layer.

Wire number floaters
This check box is used to check and erase the wire numbers that are not linked to a wire network.

Show wires (mark in red)
This check box is used to display a red outline around each wire entity and magenta outline around the wires defined on the no wire numbering layers. This check box will be activated only if you select the **Active drawing** radio button from the **Drawing Audit** dialog box.

After specifying the options in the modified **Drawing Audit** dialog box, choose the **OK** button; the **Drawing Audit** message box will be displayed, as shown in Figure 6-30. Choose the **OK** button in this message box; the **Report: Audit for this drawing** dialog box will be displayed, as shown in Figure 6-31. You can save and print a report by choosing the **Save As** button and the **Print** button, respectively from this dialog box.

Evaluation Copy. Do not reproduce. For information visit www.cadcim.com

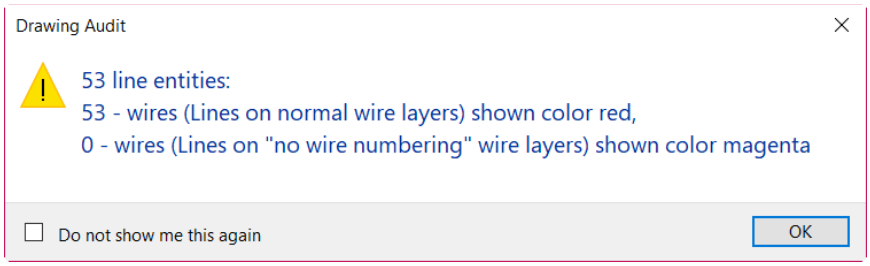

Figure 6-30 *The* ***Drawing Audit*** *message box*

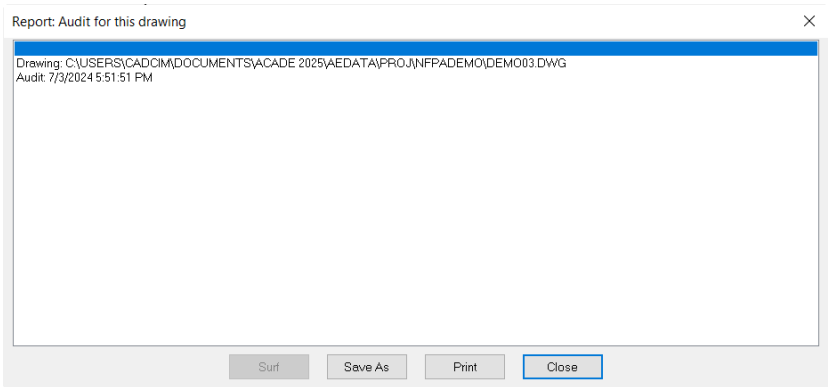

Figure 6-31 *The* ***Report: Audit for this drawing*** *dialog box*

Previous

The **Previous** button of the **Drawing Audit** dialog box is activated if you have already generated the audio report, and is used to display the previous audit report. To do so, choose the **Previous** button; the **Report: Audit** dialog box will be displayed. This dialog box re-displays the last run audit report.

Auditing an Active Project

The **Project** radio button is used to audit an active project. To do so, select the **Project** radio button from the **Active drawing or project** area of the **Drawing Audit** dialog box, refer to Figure 6-28, and then choose the **OK** button from this dialog box; the modified **Drawing Audit** dialog box will be displayed, as shown in Figure 6-32. The options in the modified **Drawing Audit** dialog box have already been discussed.

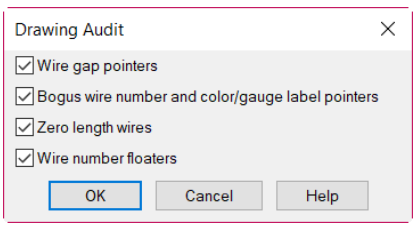

Figure 6-32 *The modified* ***Drawing Audit*** *dialog box*

Evaluation Copy. Do not reproduce. For information visit www.cadcim.com

Next, choose the **OK** button from the modified **Drawing Audit** dialog box; the **Select Drawings to Process** dialog box will be displayed, as shown in Figure 6-33. Select the drawings that you want to process and choose the **Process** button from this dialog box; the selected drawings will be moved from the top list to the bottom list. Next, choose the **OK** button in this dialog box; the **QSAVE** message box will be displayed, as shown in Figure 6-34. Next, choose the **OK** button in the **QSAVE** message box; the changes made in the current drawing will be saved and the auditing report of drawings will be displayed in the **Report: Audit** dialog box, as shown in Figure 6-35.

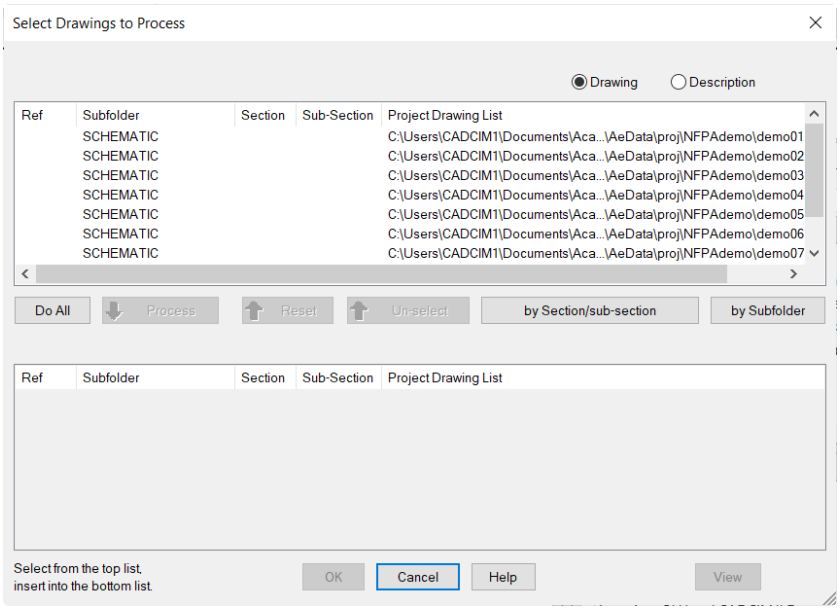

Figure 6-33 *The* ***Select Drawings to Process*** *dialog box*

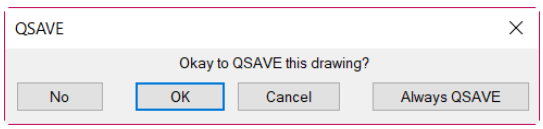

Figure 6-34 *The* ***QSAVE*** *message box*

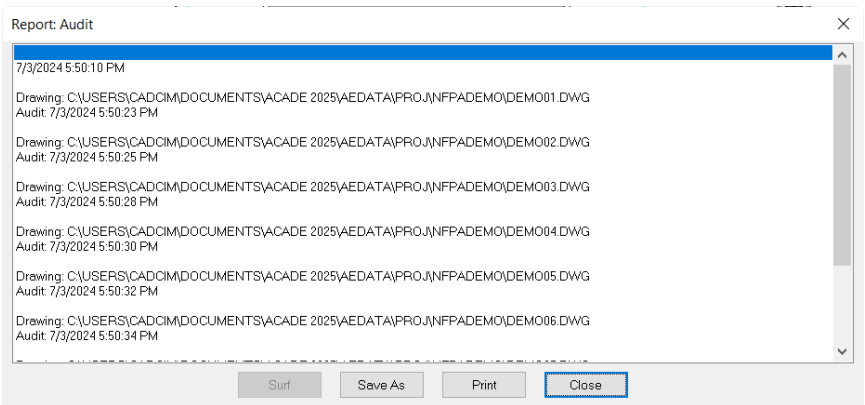

Figure 6-35 *The* ***Report: Audit*** *dialog box*

Evaluation Copy. Do not reproduce. For information visit www.cadcim.com

Note

*The **QSAVE** message box will be displayed only if you have made any changes in the current drawing and have not saved them.*

RETAGGING DRAWINGS

Ribbon:	Project > Project Tools > Update/Retag
Toolbar:	ACE:Main Electrical 2 > Project Manager > Project-Wide Update/Retag
	ACE:Project > Project-Wide Update/Retag
Menu:	Projects > Project-Wide Update/Retag
Command:	AEPROJUPDATE

The **Project-Wide Update/Retag** tool is used to update the selected drawings in a project. Also, this tool is used to retag components, update the cross-reference of component, retag wire numbers and signal references, and so on. To update or retag the drawings of a project, choose the **Update/Retag** tool from the **Project Tools** panel of the **Project** tab or choose **Projects > Project-Wide Update/Retag** from the menu bar; the **Project-Wide Update or Retag** dialog box will be displayed, as shown in Figure 6-36. Different options in this dialog box are discussed next.

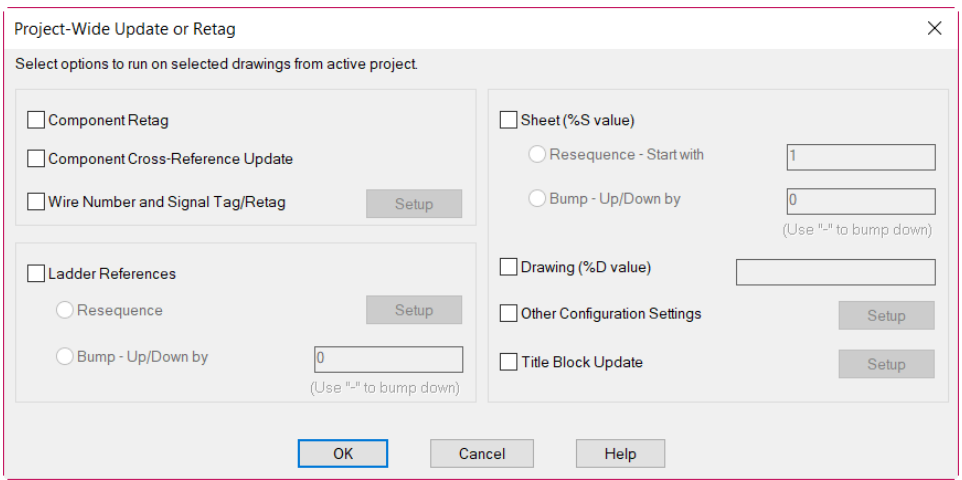

***Figure 6-36** The **Project-Wide Update or Retag** dialog box*

Component Retag

The **Component Retag** check box is used to retag all non-fixed components of the selected drawings.

Component Cross-Reference Update

The **Component Cross-Reference Update** check box is used to update the cross-reference of components of the selected drawings.

Evaluation Copy. Do not reproduce. For information visit www.cadcim.com

Wire Number and Signal Tag/Retag

The **Wire Number and Signal Tag/Retag** check box is used to update signal symbols and the wire numbers that are not fixed. Select the **Wire Number and Signal Tag/Retag** check box; the **Setup** button will be activated. Using this button, you can insert or update wire numbers that are linked to wire networks. To do so, choose the **Setup** button; the **Wire Tagging (Project-wide)** dialog box will be displayed, as shown in Figure 6-37. The options in this dialog box have been discussed in Chapter 3. Specify the required options in this dialog box and then choose the **OK** button to return to the **Project-Wide Update or Retag** dialog box.

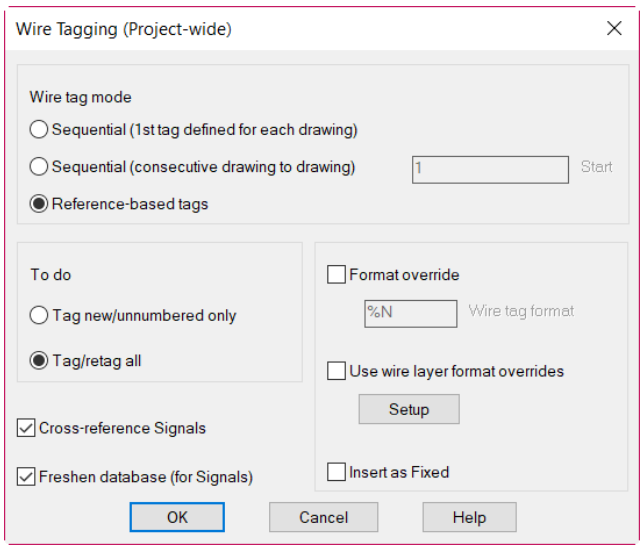

Figure 6-37 *The* ***Wire Tagging (Project-wide)*** *dialog box*

Ladder References

The **Ladder References** check box is used to renumber the ladders sequentially. To renumber each ladder of drawings sequentially, select this check box; the options below the **Ladder References** check box will be activated. These options are discussed next.

Resequence

The **Resequence** radio button is selected automatically when you select the **Ladder References** check box and is used to define the starting reference number for a ladder. Also, it is used to define the sequence of ladders in different drawings. The **Setup** button located on the right of the **Resequence** radio button is used to renumber ladder reference. To do so, choose the **Setup** button; the **Renumber Ladders** dialog box will be displayed, as shown in Figure 6-38. Using this dialog box, you can renumber the reference numbers of a ladder of the

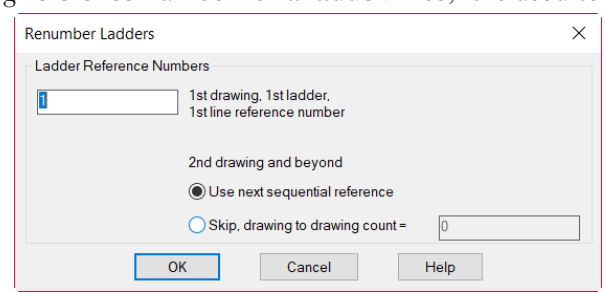

Figure 6-38 *The* ***Renumber Ladders*** *dialog box*

Evaluation Copy. Do not reproduce. For information visit www.cadcim.com

selected drawings in an active project. The options in this dialog box have already been discussed in detail in Chapter 4.

Specify the required options in this dialog box and choose the **OK** button to return to the **Project-Wide Update or Retag** dialog box.

Bump-Up/Down by

The **Bump-Up/Down by** radio button is used to increase or decrease the existing ladder line reference numbers by a specified amount. To do so, select this radio button; the edit box on the right of this radio button will be activated. Specify a value in this edit box; the reference number of the ladder will change accordingly. Also, if you add drawings in the middle of a project, the ladder references will move up. However, if you remove drawings from the project, the ladder references will move down. If you enter a negative value in the edit box, the line reference number of the ladder will move down.

Sheet (%S value)

If you select the **Sheet (%S value)** check box, the options below this check box will be activated. This check box is used to resequence the sheet value automatically in the successive drawings.

Resequence - Start with

The **Resequence - Start with** radio button is selected by default and it enables you to enter a number to start resequencing.

Bump - Up/Down by

Select the **Bump - Up/Down by** radio button; the edit box adjacent to this radio button will be activated. Next, enter the required value in the edit box; the current sheet value will move up or down by the specified value.

Drawing (%D value)

The **Drawing (%D value)** check box is used to update drawing's %D (drawing name) parameter project-wide. Select this check box; the edit box adjacent to this check box will be activated.

Other Configuration Settings

The **Other Configuration Settings** check box is used to update the drawing settings of the drawing related to component, cross-reference, wire numbers, and format project-wide. Select this check box; the **Setup** button will be activated. Choose the **Setup** button; the **Change Each Drawing's Settings -- Project-wide** dialog box will be displayed, as shown in Figure 6-39. The options in this dialog box are used to change the settings of the drawings. These options are discussed next.

Component Tagging Settings

The **Component Tagging Settings** check box is used to specify the settings for the component tag. If you select the **Component Tagging Settings** check box, the **Sequential** radio button, the **Reference-based** radio button, and the **Format** edit box will be activated. Select the **Sequential** radio button for tagging the components sequentially. The **Reference-based** radio button is

Evaluation Copy. Do not reproduce. For information visit www.cadcim.com

selected by default. As a result, the components are tagged based on reference of the ladder. Enter the format for component tagging in the **Format** edit box. By default, %F%N is displayed in this edit box.

Cross-Reference Format*

The **Cross-Reference Format** check box is used to specify the format for cross-reference of the component. Select this check box; the **Format** edit box will be activated. Enter the format for cross-reference in the **Format** edit box. By default, %N is displayed in this edit box.

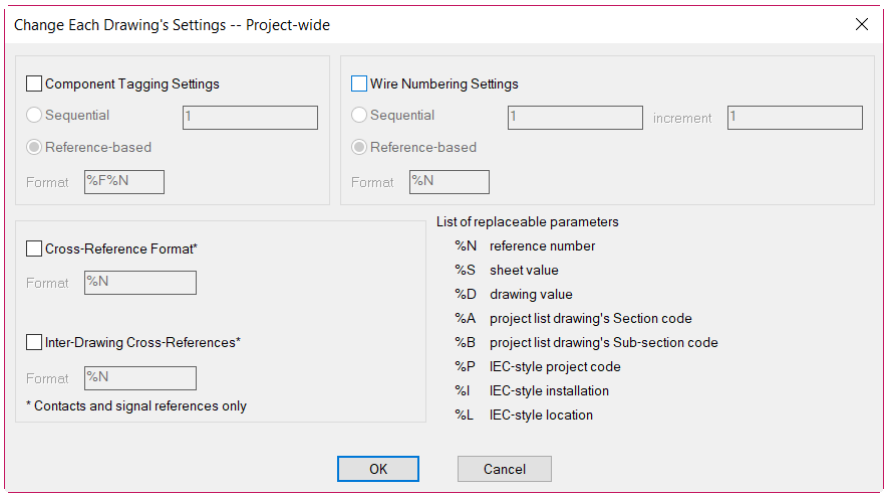

***Figure 6-39** The **Change Each Drawing's Settings -- Project-wide** dialog box*

Inter-Drawing Cross-References*

The **Inter-Drawing Cross-Reference** check box is used to specify the format for the inter-drawing cross-references.

Wire Numbering Settings

The **Wire Numbering Settings** check box is used to specify the settings for the wire numbers. Select this check box; the other options will be activated. These options are discussed next. Select the **Sequential** radio button for numbering the wires sequentially. You can enter the increment value in the **increment** edit box for wire numbering. Select the **Reference-based** radio button for numbering the wires based on reference number of the ladder. Enter the format of wire numbers in the **Format** edit box. By default, %N is displayed in this edit box.

Title Block Update

Select the **Title Block Update** check box in the **Project-Wide Update or Retag** dialog box to update the title block information of the active drawing or the entire project. By selecting this check box, the **Setup** button next to this check box will be enabled. Choose the **Setup** button; the **Update Title Block** dialog box will be displayed. Using this dialog box, you can update the attributes of the title block. The options in this dialog box will be discussed in Chapter 12. Specify the required options in the **Update Title Block** dialog box and choose the **OK** button; you will return to the **Project-Wide Update or Retag** dialog box.

Evaluation Copy. Do not reproduce. For information visit www.cadcim.com

You can use any one of the options in the **Project-Wide Update or Retag** dialog box or use all of them simultaneously by selecting the options displayed in this dialog box. After selecting the options, choose the **OK** button from the **Project-Wide Update or Retag** dialog box; the **Select Drawings to Process** dialog box will be displayed. Select the required drawings and choose the **Process** button; the selected drawings will be displayed in the bottom list. Next, choose the **OK** button from this dialog box; the selected drawings will be processed and updated accordingly.

USING TOOLS FOR EDITING ATTRIBUTES

In AutoCAD Electrical, there are a number of tools that can be used to modify attributes. These tools are used to modify the attributes of selected symbols but they are not used to modify the block. In this section, you will learn about different tools used for modifying attributes.

Moving Attributes

Ribbon:	Schematic > Edit Components > Modify Attributes drop-down > Move/Show Attribute
Toolbar:	ACE:Main Electrical > Modify Attributes drop-down > Move/Show Attribute or ACE:Edit Attributes > Move/Show Attribute
Menu:	Components > Attributes > Move/Show Attribute
Command:	AEATTSHOW



The **Move/Show Attribute** tool is used to move attributes of a component. To do so, choose the **Move/Show Attribute** tool from the **Modify Attributes** drop-down in the **Edit Components** panel of the **Schematic** tab, as shown in Figure 6-40; you will be prompted to select the attribute to move or pick block graphics for list. Select the attributes that you want to move and press ENTER; you will be prompted to specify the base point of the attribute. Specify the base point for the attribute and press ENTER or click on the screen; you will be prompted again to select the attributes to move. Press ENTER to exit the command. If you enter 'W' at the Command prompt, you will be able to move multiple attributes at a time by selecting attributes using the crossing window.

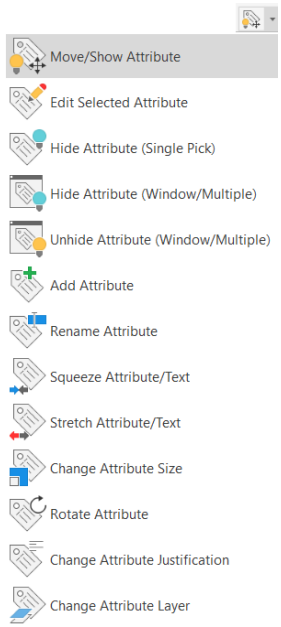

***Figure 6-40** The **Modify Attributes** drop-down*

Editing Attributes

Ribbon:	Schematic > Edit Components > Modify Attributes drop-down > Edit Selected Attribute
Toolbar:	ACE:Main Electrical > Modify Attributes drop-down > Edit Selected Attribute or ACE:Edit Attributes > Edit Selected Attribute
Menu:	Components > Attributes > Edit Selected Attribute
Command:	AEEDITATT



The **Edit Selected Attribute** tool is used to edit the selected attribute. To do so, choose the **Edit Selected Attribute** tool from the **Edit Components** panel of the **Schematic** tab; you will be prompted to select an attribute. Select an attribute; the **Edit Attribute** dialog box will be displayed, refer to Figure 6-41.

Evaluation Copy. Do not reproduce. For information visit www.cadcim.com

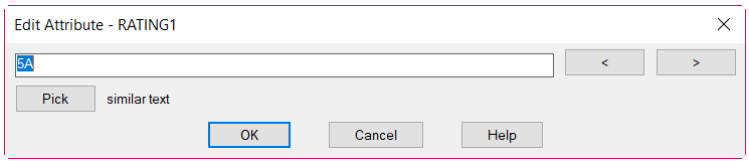

Figure 6-41 *The* ***Edit Attribute - Rating1*** *dialog box*

Enter the new name for the attribute in the edit box. Alternatively, choose the **Pick** button from the **Edit Attribute** dialog box for selecting the attribute from the current drawing. You can increase or decrease the selected attribute value by choosing the **>** and **<** buttons. Next, choose the **OK** button; the name of the selected attribute will be changed to the specified name. Press ENTER to exit the command. You can also edit components using the **Edit** tool. To do so, choose the **Edit** tool from the **Edit Components** panel of the **Schematic** tab; the **Insert / Edit Component** dialog box will be displayed. Specify the required description in the **Description** area of this dialog box and choose the **OK** button; the attribute of the component will be changed. Another method of editing the attribute of a component is by using the **Move/Show Attribute** tool. To edit the attribute text of a component, choose the **Move/Show Attribute** tool from the **Edit Components** panel of the **Schematic** tab; you will be prompted to select an attribute to move or pick on block graphics for list. Select the graphics of the block; the **SHOW / HIDE Attributes** dialog box will be displayed, as shown in Figure 6-42. Next, select the **Edit Attributes** check box located at the top right corner of this dialog box; the dialog box will be modified to the **EDIT Attributes** dialog box. Next, select the name of attribute from the list displayed in the **EDIT Attributes** dialog box; the **Edit Attribute** dialog box will be displayed. Specify the required options and choose the **OK** button in the **Edit Attribute** dialog box; the attribute value will be changed to the specified value.

Hiding Attributes

Ribbon:	Schematic > Edit Components > Modify Attributes drop-down > Hide Attribute (Single Pick)
Toolbar:	ACE:Main Electrical > Modify Attributes drop-down > Hide Attribute (Single Picks) or ACE:Edit Attributes > Hide Attribute (Single Picks)
Menu:	Components > Attributes > Hide/Unhide Attribute > Hide Attribute (Single Picks)
Command:	AEHIDEATT



The **Hide Attribute (Single Pick)** tool is used to hide the selected attribute. To do so, choose the **Hide Attribute (Single Pick)** tool from the **Modify Attributes** drop-down in the **Edit Components** panel of the **Schematic** tab; you will be prompted to select the attribute to hide or pick on block graphics for list. Select the attribute to hide it. Press ENTER to exit the command. Note that if you select the graphics of a block, the **SHOW / HIDE Attributes** dialog box will be displayed, refer to Figure 6-42. The attributes that have an asterisk (*) displayed in the **Visible** column of the **SHOW / HIDE Attributes** dialog box are visible in the drawing. To make these attributes invisible in the drawing, select these attributes in the dialog box; the asterisk will disappear from the **Visible** column indicating that the attribute is now invisible in the drawing. Similarly, if you select the attribute in the dialog box which does not have an asterisk

Evaluation Copy. Do not reproduce. For information visit www.cadcim.com

in the **Visible** column, the asterisk will appear in this column indicating that the attribute is now visible in the drawing.

You can hide multiple attributes at a time. To do so, enter 'W' at the Command prompt; you will be prompted to select the attributes. Select the attributes by using the crossing window and then press ENTER; the attributes will hide. Press ENTER to exit the command. You can also hide multiple attributes using the **Hide Attribute (Window/Multiple)** tool. To do so, choose the **Hide Attribute (Window/Multiple)** tool from the **Edit Components** panel of the **Schematic** tab; you will be prompted to select the attributes. Select the attribute and press ENTER; the **Flip Attribute to Invisible** dialog box will be displayed. Select the required attributes to flip to invisible and choose the **OK** button; the attributes will hide. Note that you can select multiple attributes from the **Flip Attribute to Invisible** dialog box by using the CTRL or SHIFT key.

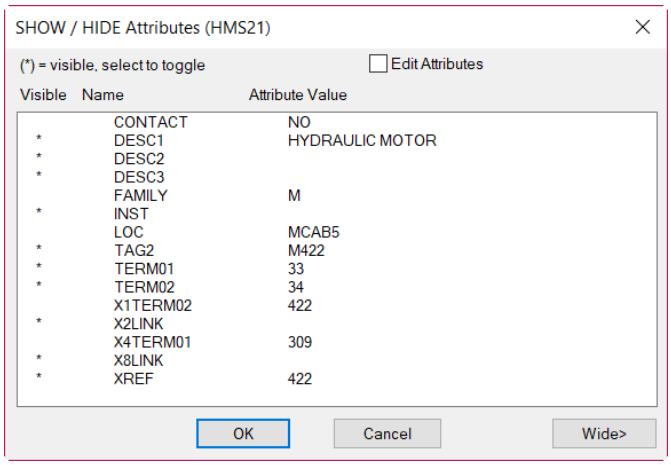

***Figure 6-42** The **SHOW / HIDE Attributes** dialog box*

Unhiding Attributes

Ribbon:	Schematic > Edit Components >Modify Attributes drop-down > Unhide Attribute (Window/Multiple)
Menu:	Components > Attributes > Hide/Unhide Attribute > Unhide Attribute (Window/Multiple)
Command:	AESHOWATTRIB

The **Unhide Attribute (Window/Multiple)** tool is used to unhide the hidden attributes. To do so, choose the **Unhide Attribute (Window/Multiple)** tool from the **Modify Attributes** drop-down in the **Edit Components** panel of the **Schematic** tab; you will be prompted to select objects. Select graphics of the symbol block and press ENTER; the **Flip Attributes to Visible** dialog box will be displayed. Select the attributes that you want to display and choose the **OK** button in the **Flip Attributes to Visible** dialog box; the attributes will be visible on the screen. Note that multiple attributes can be selected from the **Flip Attributes to Visible** dialog box by pressing CTRL or SHIFT. If you enter 'W' at the Command prompt, you will be prompted to specify the first corner. Specify the first corner; you will be prompted to specify the opposite corner. Specify the opposite corner and then press ENTER; the **Flip Attributes to Visible** dialog box will be displayed. Select one or more attributes and choose the **OK** button; the attributes will be flipped to visible.

Evaluation Copy. Do not reproduce. For information visit www.cadcim.com

Adding Attributes

Ribbon:	Schematic > Edit Components > Modify Attributes drop-down > Add Attribute
Toolbar:	ACE:Main Electrical > Modify Attributes drop-down > Add Attribute or ACE:Edit Attributes > Add Attribute
Menu:	Components > Attributes > Add Attribute
Command:	AEATTRIBUTE



The **Add Attribute** tool is used to add a new attribute to the existing AutoCAD Electrical block. To do so, choose the **Add Attribute** tool from the **Modify Attributes** drop-down in the **Edit Components** panel of the **Schematic** tab; you will be prompted to select an object. Select the object; the **Add Attribute** dialog box will be displayed, as shown in Figure 6-43. The options in this dialog box are discussed next.

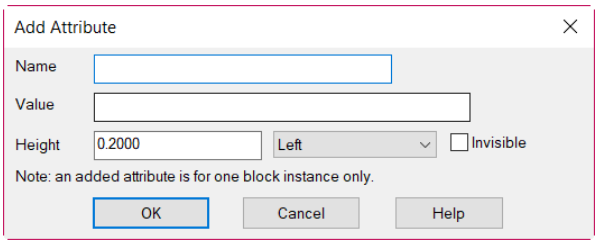

Figure 6-43 *The* ***Add Attribute*** *dialog box*

The **Name** edit box is used for identifying an attribute tag. Specify the name of the attribute in this edit box.

Specify a value for the attribute text in the **Value** edit box. The specified value will be displayed both in the drawing and reports.

Specify the height for the attribute value in the **Height** edit box. By default, 0.2000 is displayed in the **Height** edit box.

Select the justification for the attribute value from the drop-down list adjacent to the **Height** edit box. By default, Left is selected in the drop-down list.

Select the **Invisible** check box to make the attribute text invisible in the drawing. By default, this check box is clear.

Specify the required options in the **Add Attribute** dialog box and choose the **OK** button in this dialog box; you will be prompted to specify the location for attribute. By default, the first location point is already selected by AutoCAD Electrical and it is 0, 0. Next, specify the second location point and click on the screen; the attribute value will be inserted into the drawing.

Evaluation Copy. Do not reproduce. For information visit www.cadcim.com

Squeezing an Attribute/Text

Ribbon:	Schematic > Edit Components > Modify Attributes drop-down > Squeeze Attribute/Text
Toolbar:	ACE:Main Electrical > Modify Attributes drop-down> Squeeze Attribute/Text or ACE:Edit Attributes > Squeeze Attribute/Text
Menu:	Components > Attributes > Squeeze Attribute/Text
Command:	AEATTSQUEEZE



The **Squeeze Attribute/Text** tool is used to reduce the attribute or text size to make it suitable for tight places. After each click on the attribute or text, the width of the attribute or text reduces by 5%. To squeeze the attribute or text size, choose the **Squeeze Attribute/Text** tool from the **Modify Attributes** drop-down in the **Edit Components** panel of the **Schematic** tab; you will be prompted to select the attribute or text to be squeezed. Select the attribute or text; you will be prompted again to select the attribute or text. Continue the selection till it is squeezed to a required size. Next, press ENTER to exit the command.

Stretching an Attribute/Text

Ribbon:	Schematic > Edit Components > Modify Attributes drop-down > Stretch Attribute/Text
Toolbar:	ACE:Main Electrical >Modify Attributes drop-down > Stretch Attribute/Text or ACE:Edit Attributes > Stretch Attribute/Text
Menu:	Components > Attributes > Stretch Attribute/Text
Command:	AEATTSTRETCH



The **Stretch Attribute/Text** tool is used to expand the attribute or text size. After each click on the attribute or text, the width of the attribute or text increases by 5%. To stretch an attribute, choose the **Stretch Attribute/Text** tool from the **Modify Attributes** drop-down in the **Edit Components** panel of the **Schematic** tab; you will be prompted to select the attribute or text. Select the attribute or text; the attribute or text will be stretched. The command will continue till you press ENTER.

Changing the Attribute Size

Ribbon:	Schematic > Edit Components > Modify Attributes drop-down > Change Attribute Size
Toolbar:	ACE:Main Electrical >Modify Attributes drop-down > Change Attribute Size or ACE:Edit Attributes > Change Attribute Size
Menu:	Components > Attributes > Change Attribute Size
Command:	AEATTSIZE



The **Change Attribute Size** tool is used to change the height and width of the attribute text that has already been inserted into the drawing. To change the text size of the attribute, choose the **Change Attribute Size** tool from the **Modify Attributes** drop-down in the **Edit Components** panel of the **Schematic** tab; the **Change Attribute Size** dialog box will be displayed, as shown in Figure 6-44. The options in this dialog box are discussed next.

Evaluation Copy. Do not reproduce. For information visit www.cadcim.com

Specify the size for the attribute in the **Size** edit box. Specify the width for the attribute in the **Width** edit box. Alternatively, choose the **Pick >>** button; you will be prompted to select the attribute. Select the required attribute; the **Change Attribute Size** dialog box will be displayed again and the values of the selected attribute size and width will be displayed in the **Size** and **Width** edit boxes. By default, the **Apply** check boxes are selected. As a result, the new size and width is applied to the attribute that you select. If you clear the **Apply** check boxes in the **Change Attribute Size** dialog box, the **Single**, **By Name**, and **Type It** buttons will not be activated.

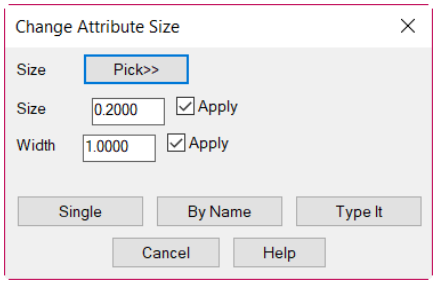

***Figure 6-44** The **Change Attribute Size** dialog box*

The **Single** button is used to select one attribute at a time. The **By Name** button is used to change the size and width of the same type of attributes. For example, if you select DESC2 attribute of a symbol, then the size and width of only DESC2 attribute of all the components present in the drawing will get changed. Choose the **By Name** button; you will be prompted to select the attribute/name. Select the attribute/name and press ENTER; the size and width of the attributes of same type will be changed according to the specified size and width. You can also select multiple attributes at a time. To do so, enter **W** at the Command prompt; you will be prompted to specify the first corner. Specify the first corner; you will be prompted to specify the opposite corner. Specify the opposite corner and then press ENTER; the size and width of the selected attributes will get changed according to the specified size. Also, if you enter **ALL** at the Command prompt, all attributes by the same name that are present in the drawing will be selected and changed to the new attribute size. Press ESC to exit the command.

The **Type It** button is used to specify the name of the attribute to be matched to the selected attributes. To do so, choose the **Type It** button; the **Enter Attribute Name** dialog box will be displayed. Enter the attribute name in the edit box that you want to match to the attributes that you will select. For example, DESC1 for description of the component, TAG1 for tag of the component, and so on. Next, choose the **OK** button in the **Enter Attribute Name** dialog box; you will be prompted to select blocks to process. Select the blocks and press ENTER; the size of attributes will be changed accordingly. Alternatively, select multiple attributes by window selection. Also, if you enter **ALL** at the Command prompt, all attributes present in the active drawing will be selected. Next, press ENTER to change the attributes to the new attribute size and width. Note that you can also enter wildcards in the edit box and include a series of attribute names to match by separating each attribute name using semi-colons.

If you do not enter any attribute name in the edit box of the **Enter Attribute Name** dialog box and choose **OK**, then it will again return to the **Change Attribute Size** dialog box. Choose the **Cancel** button to exit from this dialog box.

Evaluation Copy. Do not reproduce. For information visit www.cadcim.com

Rotating an Attribute

Ribbon:	Schematic > Edit Components > Modify Attributes drop-down > Rotate Attribute
Toolbar:	ACE:Main Electrical > Modify Attributes drop-down > Rotate Attribute or ACE:Edit Attributes > Rotate Attribute
Menu:	Components > Attributes > Rotate Attribute
Command:	AEATTROTATE

The **Rotate Attribute** tool is used to rotate the selected attribute text by 90 degrees. To do so, choose the **Rotate Attribute** tool from the **Modify Attributes** drop-down in the **Edit Components** panel of the **Schematic** tab; you will be prompted to select the attribute text to rotate. Select the attribute text; the text will be rotated by 90 degrees in counterclockwise direction. Press ENTER to exit the command. Now, if you want to move the attribute text, enter '**M**' at the Command prompt and press ENTER; you will be prompted to specify the base point. Specify the base point and press ENTER; you will be prompted to specify the destination point. Specify the destination point and press ENTER; the attribute text will be moved to the specified location.

Changing the Justification of an Attribute

Ribbon:	Schematic > Edit Components > Modify Attributes drop-down > Change Attribute Justification
Toolbar:	ACE:Main Electrical > Modify Attributes drop-down> Change Attribute Justification or ACE:Edit Attributes > Change Attribute Justification
Menu:	Components > Attributes >Change Attribute Justification
Command:	AEATTJUSTIFY

The **Change Attribute Justification** tool is used to change the justification of any attribute such as wire number text, component description text, and so on. To change the justification of an attribute, choose the **Change Attribute Justification** tool from the **Modify Attributes** drop-down in the **Edit Components** panel of the **Schematic** tab; the **Change Attribute/Text Justification** dialog box will be displayed, as shown in Figure 6-45. The options in this dialog box are discussed next.

Select the required justification for the attribute text from the **Select Justification** area in this dialog box; the **OK** button will be activated. Choose **OK**; you will be prompted to select the text or attribute to change the justification. Select the text or attribute; the justification of the attribute or text will be changed.

Alternatively, choose the **Pick Master** button; you will be prompted to select the master attribute or text that will be used for justification of other attributes or text. Next, select the attribute or text; the **Change Attribute/Text Justification** dialog box will be displayed on the screen again. Choose **OK**; you will be prompted to select the

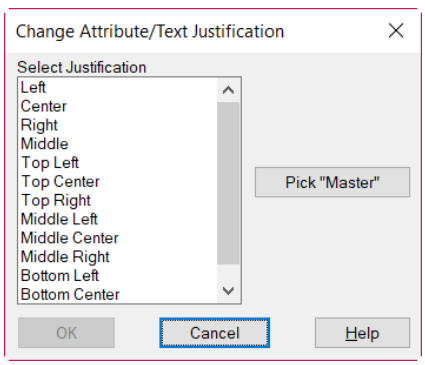

***Figure 6-45** The **Change Attribute/Text Justification** dialog box*

Evaluation Copy. Do not reproduce. For information visit www.cadcim.com

attribute or text for the change of justification. Select attributes or text and press ENTER; the justification of attributes or text will be changed. Alternatively, enter '**W**' at the Command prompt to select the attributes or text by using a crossing window. Press ENTER to exit the command.

Changing an Attribute Layer

Ribbon:	Schematic > Edit Components > Modify Attributes drop-down > Change Attribute Layer
Toolbar:	ACE:Main Electrical > Modify Attributes drop-down > Change Attribute Layer or ACE:Edit Attributes > Change Attribute Layer
Menu:	Components > Attributes > Change Attribute Layer
Command:	AEATTLAYER

The **Change Attribute Layer** tool is used to change the layer of the selected attribute. To do so, choose the **Change Attribute Layer** tool from the **Modify Attributes** drop-down in the **Edit Components** panel of the **Schematic** tab; the **Force Attribute/Text to a Different Layer** dialog box will be displayed, as shown in Figure 6-46.

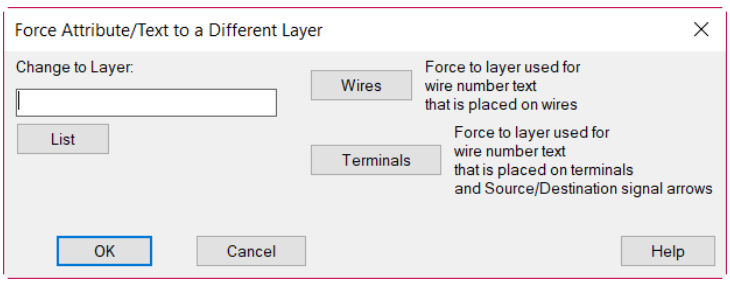

Figure 6-46 *The* ***Force Attribute/Text to a Different Layer*** *dialog box*

Enter the name of the target layer in the **Change to Layer** edit box. Alternatively, choose the **List** button; the **Layers in Drawing** dialog box will be displayed. Select the layer and choose the **OK** button; the name of the target layer will be displayed in the **Change to Layer** edit box.

If you choose the **Wires** button, the WIRENO will be displayed in the **Change to Layer** edit box. This button is used to change the layer of a selected attribute or text for the layer that has been used for wire number text placed on wires.

If you choose the **Terminals** button, the WIREREF will be displayed in the **Change to Layer** edit box. In this case, the layer of the attribute or text that you select will get changed to the layer that is used for wire number text placed on terminals and source/destination signal arrow.

Note

The ***Wires*** *and* ***Terminals*** *buttons in the* ***Force Attributes/Text to a Different Layer*** *dialog box will be activated only if the WIRES and TERMINALS layers are available in the active drawing respectively.*

After specifying the required options in the **Force Attribute/Text to a Different Layer** dialog box, choose the **OK** button in this dialog box; you will be prompted to select the attribute or text

Evaluation Copy. Do not reproduce. For information visit www.cadcim.com

to move to layer. Select the attribute or text; the attribute or text layer will get changed to the layer that you have entered in the **Change to Layer** edit box. Press ENTER to exit the command.

TUTORIALS

The tutorials given next are available in video format.

Tutorial 1

In this tutorial, you will insert a ladder and its components into a drawing. Next, you will use the **Copy Component**, **Scoot**, **Move Component**, and **Delete Component** tools for copying, scooting, moving, and deleting the inserted components. refer to Figure 6-47. Also, you will hide the attributes of components. **(Expected time: 30 min)**

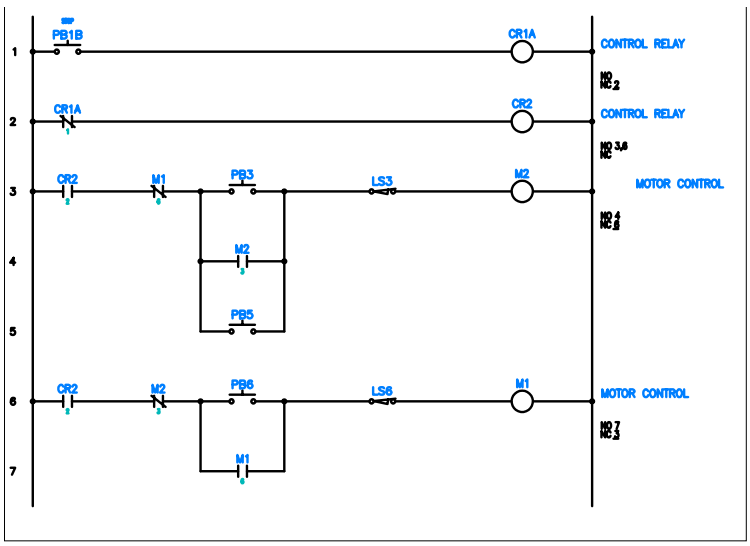

Figure 6-47 *Ladder diagram for Tutorial 1*

The following steps are required to complete this tutorial:

a. Create a new drawing.
b. Insert ladder in the drawing.
c. Insert components and add descriptions.
d. Copy components.
e. Hide attributes.
f. Delete components.
g. Move components.
h. Add wires.
i. Scoot components.
j. Trim wires.
k. Align components.
l. Save the drawing file.

Evaluation Copy. Do not reproduce. For information visit www.cadcim.com

Creating a New Drawing

1. Activate the **CADCIM** project, if it is not already active.

2. Choose the **New Drawing** button from the **PROJECT MANAGER**; the **Create New Drawing** dialog box is displayed. Enter **C06_tut01** in the **Name** edit box of the **Drawing File** area. Select the template as **ACAD_ELECTRICAL.dwt** and enter **Schematic Components** in the **Description 1** edit box.

3. Choose the **OK** button; the *C06_tut01.dwg* drawing is created in the **CADCIM** project and is displayed at the bottom of the drawing list in the **CADCIM** project. Next, move the *C06_tut01.dwg* to the *TUTORIALS* subfolder of the **CADCIM** project.

Inserting Ladder into the Drawing

1. Choose the **Insert Ladder** tool from **Schematic > Insert Wires/Wire Numbers > Insert Ladder** drop-down; the **Insert Ladder** dialog box is displayed.



2. Set the following parameters in the **Insert Ladder** dialog box:

Width: **8.000**
1st Reference: **1**
1 Phase: Select this radio button
Spacing: **1.000**
Rungs: **7**
Yes: Select this radio button

3. After setting these parameters, click in the **Length** edit box; the length of the ladder is automatically calculated and displayed in this edit box. Also, make sure that 0 is displayed in the **Skip** edit box of the **Draw Rungs** area.

4. Choose the **OK** button; you are prompted to specify the start position of the first rung. Enter **11,18** at the Command prompt and press ENTER; the ladder is inserted into the drawing, as shown in Figure 6-48. Next, choose **View > Zoom > In** from the menu bar to zoom in the drawing.



Figure 6-48 *Ladder with 7 rungs*

Evaluation Copy. Do not reproduce. For information visit www.cadcim.com

Inserting Components and Adding Descriptions

1. Choose the **Icon Menu** tool from **Schematic > Insert Components > Icon Menu** drop-down; the **Insert Component** dialog box is displayed.



2. Select the **Push Buttons** icon from the **NFPA: Schematic Symbols** area of the **Insert Component** dialog box; the **NFPA: Schematic Symbols** area is modified to the **NFPA: Push Buttons** area.

3. Select the **Push Button NO** icon from the **NFPA: Push Buttons** area; the cursor along with the component is displayed and you are prompted to specify the insertion point for the push button. Enter **11.5,18** at the Command prompt and press ENTER; the push button is placed at rung 1 and the **Insert / Edit Component** dialog box is displayed. By default, PB1B is displayed in the edit box of the **Component Tag** area.

4. Enter **STOP** in the **Line 1** edit box in the **Description** area.Next, choose the **OK** button from the **Insert / Edit Component** dialog box; the PB1B component is inserted into the drawing.

5. Repeat step 1. Select the **Relays/Contacts** icon displayed in the **NFPA: Schematic Symbols** area of the **Insert Component** dialog box; the **NFPA: Relays and Contacts** area is displayed.

6. Select the **Relay Coil** icon in the **NFPA: Relays and Contacts** area of the **Insert Component** dialog box; you are prompted to specify the insertion point. Enter **13,18** at the Command prompt and press ENTER; the **Insert / Edit Component** dialog box is displayed. By default, CR1A is displayed in the edit box of the **Component Tag** area.

7. Enter **CONTROL RELAY** in the **Line 1** edit box in the **Description** area. Next, choose the **OK** button from the **Insert / Edit Component** dialog box; the component CR1A gets added to rung 1 of the ladder.

8. Repeat Step 1. Select the **Relays/Contacts** icon displayed in the **Insert Component** dialog box; the **NFPA: Relays and Contacts** area is displayed.

9. Select the **Relay Coil** icon in the **NFPA: Relays and Contacts** area of the **Insert Component** dialog box; you are prompted to specify the insertion point. Enter **13.5,17** at the Command prompt and press ENTER. By default, CR2 is displayed in the edit box of the **Component Tag** area of the **Insert / Edit Component** dialog box.

10. Enter **CONTROL RELAY** in the **Line 1** edit box in the **Description** area. Next, choose the **OK** button from the **Insert / Edit Component** dialog box; the component CR2 gets added to rung 2 of the ladder.

11. Repeat Step 1. Select the **Relays/Contacts** icon and then select **Relay NC Contact** in the **NFPA: Relays and Contacts** area of the **Insert Component** dialog box; you are prompted to specify the insertion point. Enter **11.5,17** at the Command prompt and press ENTER; the **Insert / Edit Child Component** dialog box is displayed.

Evaluation Copy. Do not reproduce. For information visit www.cadcim.com

12. Choose the **Drawing** button from the **Component Tag** area of the **Insert / Edit Child Component** dialog box; the **Active Drawing list for FAMILY = "CR"** dialog box is displayed. Select **CR1A** from this dialog box and choose the **OK** button; the information is displayed in the **Insert / Edit Child Component** dialog box.

    By default, **CONTROL RELAY** is displayed in the **Line 1** edit box of the **Description** area.

13. Enter **NORMALLY CLOSED** in the **Line 2** edit box of the **Description** area. Next, choose the **OK** button in the **Insert / Edit Child Component** dialog box; the component CR1A is added to the ladder rung 2.

14. Repeat Step 1. Select the **Relays/Contacts** icon and then select **Relay NO Contact** in the **NFPA: Relays and Contacts** area; you are prompted to specify the insertion point. Enter **11.5,16** at the Command prompt and press ENTER; the **Insert / Edit Child Component** dialog box is displayed.

15. Choose the **Drawing** button from the **Component Tag** area of the **Insert / Edit Child Component** dialog box; the **Active Drawing list for FAMILY = "CR"** dialog box is displayed. Select **CR2** from this dialog box and choose the **OK** button; the information is displayed in the **Insert / Edit Child Component** dialog box.

16. Enter **NORMALLY OPEN** in the **Line 2** edit box of the **Description** area in the **Insert / Edit Child Component** dialog box and then choose the **OK** button from this dialog box; the CR2 control relay is inserted into the drawing in the rung 3.

17. Repeat step 1. Select the **Motor Control** icon from the **NFPA: Schematic Symbols** area in the **Insert Component** dialog box. Next, select **Motor Starter Coil** from the **NFPA: Motor Control** area; you are prompted to specify the insertion point for the component.

18. Enter **17.5,16** at the Command prompt and press ENTER; the **Insert / Edit Component** dialog box is displayed. Enter **M2** in the edit box of the **Component Tag** area. Also, enter its description as **MOTOR CONTROL** in the **Line 1** edit box of the **Description area** of the **Insert / Edit Component** dialog box. Choose the **OK** button from this dialog box; the **Motor Starter Coil** is inserted into rung 3 of the ladder.



Note

*You may need to move the attributes of the inserted components by using the **Move/Show Attribute** tool.*

    Next, you need to insert **2nd + Starter Contact NO** in the rung 4.

19. Choose the **Motor Control** icon from the **Insert Component** dialog box and then select **2nd+Starter Contact NO** from the **NFPA: Motor Control** area; you are prompted to specify the insertion point.

20. Enter **11.5,15** at the Command prompt and press ENTER; the **Insert / Edit Child Component** dialog box is displayed. Choose the **Drawing** button from the **Component Tag**

Evaluation Copy. Do not reproduce. For information visit www.cadcim.com

area of the **Insert / Edit Child Component** dialog box; the **Active Drawing list for FAMILY = "M"** dialog box is displayed. Select **M2** from this dialog box and choose the **OK** button; the information is displayed in the **Insert / Edit Child Component** dialog box.

21. Enter **NORMALLY OPEN** in the **Line 2** edit box of the **Description** area in the **Insert / Edit Child Component** dialog box and then choose the **OK** button from this dialog box; the M2 starter contact is inserted into the drawing in the rung 4.

22. Repeat step 1. Select the **Motor Control** icon from the **NFPA: Schematic Symbols** area in the **Insert Component** dialog box. Next, select **Motor Starter Coil** from the **NFPA: Motor Control** area; you are prompted to specify the insertion point for the component.

23. Enter **18,13** at the Command prompt. Enter **M1** in the edit box of the **Component Tag** area. Also, enter its description as **MOTOR CONTROL** in the **Line 1** edit box of the **Description** area of the **Insert / Edit Component** dialog box. Choose the **OK** button from the **Insert / Edit Component** dialog box; the **Motor Starter Coil (M1)** is inserted into rung 6 of the ladder.

24. Again, repeat step 1. Select the **Motor Control** icon and then select **2nd+Starter Contact NC** from the **NFPA: Motor Control** area of the **Insert Component** dialog box; you are prompted to specify the insertion point for the component.

25. Enter **12.8,16** at the Command prompt and press ENTER; the **Insert / Edit Child Component** dialog box is displayed. Choose the **Drawing** button from the **Component Tag** area of the **Insert / Edit Child Component** dialog box; the **Active Drawing list for FAMILY = "M"** dialog box is displayed. Select **M1** from this dialog box and choose the **OK** button; the information is displayed in the **Insert / Edit Child Component** dialog box.

26. Enter **NORMALLY CLOSED** in the **Line 2** edit box of the **Description** area in the **Insert / Edit Child Component** dialog box and then choose the **OK** button from this dialog box; the Motor starter contact (M1) is inserted into the drawing in the rung 3.

    Next, you need to insert **Limit Switch, NC** in the rung 3.

27. Choose the **Limit Switches** icon from the **Insert Component** dialog box; the **NFPA: Limit Switches** area is displayed. Select **Limit Switch, NC** from this area; you are prompted to specify the insertion point.

28. Enter **16,16** at the Command prompt and press ENTER; the **Insert / Edit Component** dialog box is displayed. By default, **LS3** is displayed in the **Component Tag** edit box of the **Insert / Edit Component** dialog box. Also, enter **LIMIT SWITCH** and **NORMALLY CLOSED** in the **Line 1** and **Line 2** edit boxes, respectively in the **Description** area of the **Insert / Edit Component** dialog box. Choose the **OK** button; LS3 gets inserted into rung 3.

    Similarly, you need to insert **Limit Switch, NO** in the rung 1.

29. Choose the **Limit Switch, NO** from the **NFPA: Limit Switches** icon of the **Insert Component** dialog box; you are prompted to specify the insertion point.

Evaluation Copy. Do not reproduce. For information visit www.cadcim.com

30. Enter **18,18** at the Command prompt and press ENTER; the **Insert / Edit Component** dialog box is displayed. By default, LS1A is displayed in the edit box of the **Component Tag** area in this dialog box. Next, choose the **OK** button; LS1A is inserted into rung 1 of drawing. Figure 6-49 shows the ladder with components inserted in it.

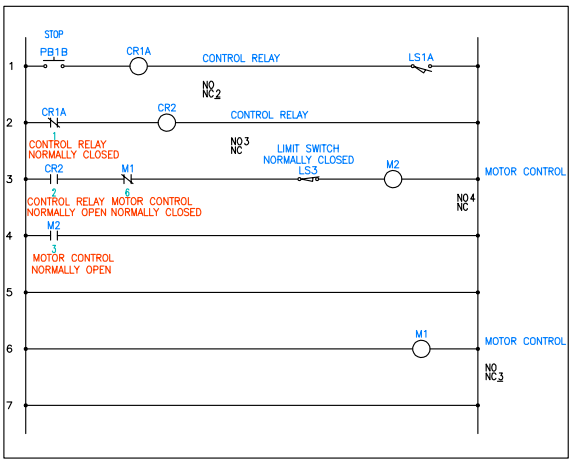

Figure 6-49 *Components inserted in the ladder*

31. Choose the **Move/Show Attribute** tool from **Schematic > Edit Components > Modify Attributes** drop-down; you are prompted to select the object. Select the **Motor Control** attribute of the **Motor Starter Coil** and press ENTER; you are prompted to specify the base point. Specify the base point at the left corner of the attribute and move the attribute, refer to Figure 6-49.

Copying Components

1. Choose the **Copy Component** tool from the **Edit Components** panel of the **Schematic** tab; you are prompted to select a component to copy.



2. Select **PB1B** (push button) placed on rung 1; you are prompted to specify the insertion point for the copied component. Enter **14,16** at the Command prompt and press ENTER; the **Insert / Edit Component** dialog box is displayed.

3. By default, PB3 is displayed in the edit box of the **Component Tag** area. Enter **DOWN** in the **Line 1** edit box of the **Description** area of the **Insert / Edit Component** dialog box. Next, choose the **OK** button in this dialog box; the component PB3 gets inserted into rung 3.

4. Similarly, right-click on CR2 placed on rung 3 and choose the **Copy Component** option from the marking menu displayed; you are prompted to specify the insertion point. Enter **12,13** at the Command prompt and press ENTER; the **Insert / Edit Child Component** dialog box is displayed.

5. Choose the **Drawing** button from the **Component Tag** area of the **Insert / Edit Child Component** dialog box; the **Active Drawing list for FAMILY = "CR"** dialog box is displayed. Select CR2 (third entry) from this dialog box and choose the **OK** button; the information is displayed in the **Insert / Edit Child Component** dialog box.

Evaluation Copy. Do not reproduce. For information visit www.cadcim.com

By default, **CONTROL RELAY** is displayed in the **Line 1** edit box of the **Description** area and **NORMALLY OPEN** in the **Line 2** edit box of the **Description** area.

6. Choose the **OK** button in the **Insert / Edit Child Component** dialog box; the component CR2 is inserted into rung 6 of the drawing.

7. Right-click on PB1B that you have placed on rung 1 and choose the **Copy Component** option from the marking menu displayed; you are prompted to specify the insertion point. Enter **13,14** at the Command prompt and press ENTER; the **Insert / Edit Component** dialog box is displayed.

8. Remove description from the **Line 1** of the **Description** area in the **Insert / Edit Component** dialog box. Also, enter **PB5** in the edit box of the **Component Tag** area, if it is not displayed. Next, choose the **OK** button in this dialog box; the PB5 is inserted on rung 5. Right-click on **PB1B** and choose the **Copy Component** option from the marking menu displayed; you are prompted to specify the insertion point.

9. Enter **14,13** at the Command prompt and press ENTER; the **Insert / Edit Component** dialog box is displayed. In this dialog box, **PB6** is displayed by default in the edit box of the **Component Tag** area. Remove the description from the **Line 1** edit box of the **Description** area and choose the **OK** button; PB6 is inserted into rung 6 in the ladder.

10. Right-click on Motor control M2 that is on rung 4 and choose the **Copy Component** option from the marking menu displayed; you are prompted to specify the insertion point. Enter **12,12** at the Command prompt and press ENTER; the **Insert / Edit Child Component** dialog box is displayed.

11. Choose the **Drawing** button from the **Component Tag** area of the **Insert / Edit Child Component** dialog box; the **Active Drawing list for FAMILY = "M"** dialog box is displayed. Select **M1** (first entry) from this dialog box and choose the **OK** button; the information is displayed in the **Insert / Edit Child Component** dialog box.

12. Enter **NORMALLY OPEN** in the **Line 2** edit box of the **Description** area in the **Insert / Edit Child Component** dialog box and then choose the **OK** button from this dialog box; the Motor starter contact (M1) is inserted into the drawing in rung 7.

13. Similarly, select M1 from rung 3 and copy it to rung 6 at **15,13**. Choose the **Drawing** button from the **Component Tag** area of the **Insert / Edit Child Component** dialog box; the **Active Drawing list for FAMILY = "M"** dialog box is displayed. Select **M2** (fourth entry) from this dialog box and choose the **OK** button; the information is displayed in the **Insert / Edit Child Component** dialog box.

14. Enter **NORMALLY CLOSED** in the **Line 2** edit box of the **Description** area in the **Insert / Edit Child Component** dialog box and then choose the **OK** button from this dialog box; the M2 starter contact is inserted into the drawing in rung 6.

Evaluation Copy. Do not reproduce. For information visit www.cadcim.com

15. Next, select limit switch LS3 from 3rd rung and copy it at **15**,**15**. Again, select LS3 and copy it at **16**,**13**. You will notice that the limit switch is inserted in rung 4 and rung 6. Keep the values in the **Description** area intact. Figure 6-50 shows the copied components.

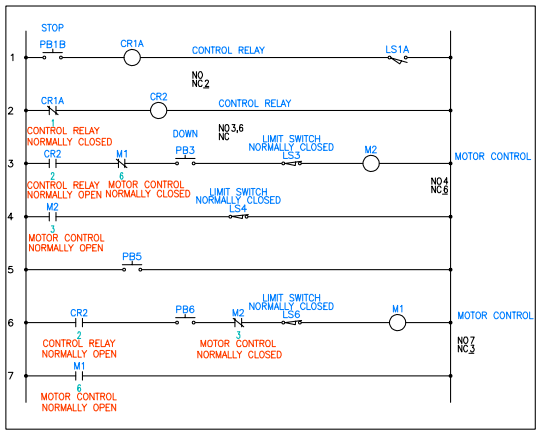

Figure 6-50 *The copied components*

Hiding Attributes

1. Choose the **Hide Attribute (Single Pick)** tool from **Schematic > Edit Components > Modify Attributes** drop-down; you are prompted to select the attributes to hide.

2. Select the DESC1 and DESC2 attributes of the following components:

   CR1A placed on rung 2,
   CR2, M1, PB3, and LS3 placed on rung 3,
   M2 and LS4 placed on rung 4,
   CR2, M2, and LS6 placed on rung 6, and
   M1 placed on rung 7.

   On doing so, the description of the components is hidden.

3. Press ENTER to exit the command. Figure 6-51 shows the ladder and component with hidden attributes.

Deleting Components

1. Choose the **Delete Component** tool from the **Edit Components** panel of the **Schematic** tab; you are prompted to select objects.



2. Select LS1A from rung 1 and LS4 from rung 4, and then press ENTER; the **Search for / Surf to Children?** dialog box is displayed. Choose the **No** button from this dialog box; components are deleted from the drawing, as shown in Figure 6-52.

Evaluation Copy. Do not reproduce. For information visit www.cadcim.com

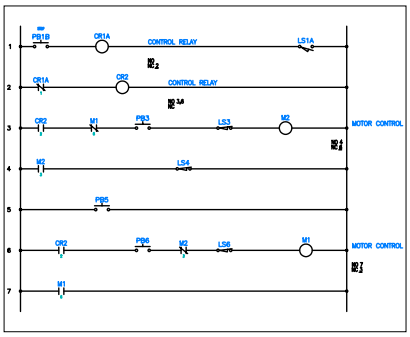

Figure 6-51 *The ladder after hiding attributes*

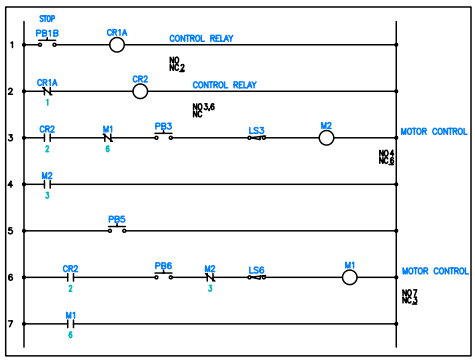

Figure 6-52 *The ladder after deleting components*

Moving Components

1. Choose the **Move Component** tool from **Schematic > Edit Components > Modify Components** drop-down; you are prompted to select the component to move.



2. Select M2 from rung 6; you are prompted to specify the insertion point for the component.

3. Enter **13,13** at the Command prompt and press ENTER; M2 is moved to a new location in rung 6, as shown in Figure 6-53.

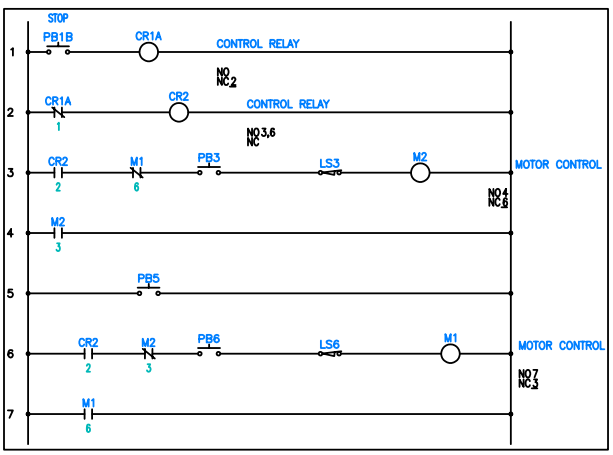

Figure 6-53 *M2 moved to a different location*

Adding Wires

1. Choose the **Wire** tool from **Schematic > Insert Wires/Wire Numbers > Wire** drop-down; you are prompted to specify the starting point of the wire at the Command prompt.



2. Enter **13.4,16** at the Command prompt and press ENTER; you are prompted to specify the wire endpoint. Next, enter **13.4,15** and press ENTER; the wire is inserted between rung 3 and 4 on the left side of the PB3.

Evaluation Copy. Do not reproduce. For information visit www.cadcim.com

3. Enter **14.6,16** at the Command prompt and press ENTER; you are prompted to specify the wire endpoint. Next, enter **14.6,15** and press ENTER; the wire is inserted between rung 3 and 4 on the right side of the PB3.

4. Enter **13.4,15** at the Command prompt and press ENTER; you are prompted to specify the wire endpoint. Next, enter **13.4,14** and press ENTER; the wire is inserted between rung 4 and 5.

5. Enter **14.6,15** at the Command prompt and press ENTER; you are prompted to specify the wire endpoint. Next, enter **14.6,14** and press ENTER; the wire is inserted between rung 4 and 5.

6. Enter **13.4,13** at the Command prompt and press ENTER; you are prompted to specify the wire endpoint. Next, enter **13.4,12** and press ENTER; the wire is inserted between rung 6 and 7 on the left side of the PB6.

7. Enter **14.6,13** at the Command prompt and press ENTER; you are prompted to specify the wire endpoint. Next, enter **14.6,12** and press ENTER; the wire is inserted between rung 6 and 7 on the right side of the PB6. Now, press ENTER to exit the command. Figure 6-54 shows the wires inserted in the drawing.

Scooting Components

1. Choose the **Scoot** tool from **Schematic > Edit Components > Modify Components** drop-down; you are prompted to select the component.



2. Select M2 from rung 4 and enter **14**,**15** at the Command prompt and then press ENTER; M2 is moved to a new location.

3. Select PB5 from rung 5 and enter **14**,**14** at the Command prompt and then press ENTER; PB5 is moved to a new location.

4. Select M1 from rung 7 and enter **14**,**12** at the Command prompt and then press ENTER; M1 is moved to a new location.

5. Press ENTER to exit the command. Figure 6-55 shows the schematic diagram after using the **Scoot** tool.

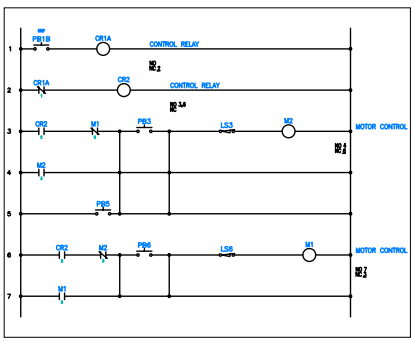

Figure 6-54 *Wires inserted in the ladder*

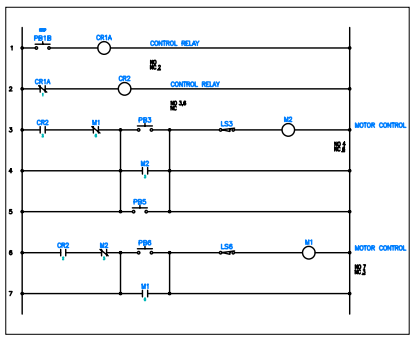

Figure 6-55 *The ladder after using the* ***Scoot*** *tool*

Evaluation Copy. Do not reproduce. For information visit www.cadcim.com

Trimming Wires

1. Choose the **Trim Wire** tool from the **Edit Wires/Wire Numbers** panel of the **Schematic** tab; you are prompted to select the wire to trim.



2. Select the following wires to trim: right and left portions of rung 4, rung 5, and rung 7. Next, press ENTER to exit the command.

Aligning Components

1. Choose the **Align** tool from **Schematic > Edit Components > Modify Components** drop-down; you are prompted to select the component to align horizontally or vertically.



2. Select PB1B on rung 1; an imaginary line passing through the center of PB1 is displayed and you are prompted to select objects.

3. Select CR1A placed on rung 2, CR2 placed on rung 3, and CR2 placed on rung 6 from the left of the ladder. Next, press ENTER; the components are aligned toward the left.

4. Repeat step1. Select M1 from rung 3; an imaginary line passing through the center of M1 is displayed and you are prompted to select objects. Next, select M2 placed on rung 6 and press ENTER; M1 placed on rung 3 and M2 placed on rung 6 are aligned.

5. Repeat step 1 and then select M1 placed on the right side of rung 6. Next, select M2 placed on rung 3, CR2 placed on rung 2, and CR1A placed on rung 1 and press ENTER; the selected components are aligned.

6. Repeat step 1 and then select PB3 from rung 3; you are prompted to select objects. Next, select M2 placed on rung 4, PB5, PB6, and M1 placed on rung 7 from the drawing and then press ENTER; the selected components are aligned. Figure 6-56 shows the aligned components.

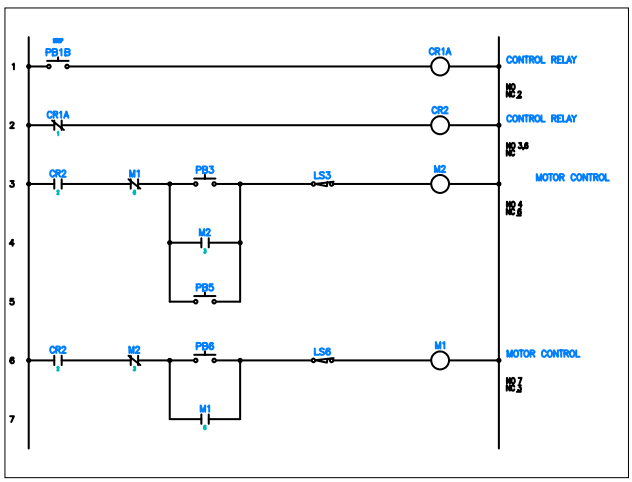

Figure 6-56 *The trimmed wires and the aligned components*

Evaluation Copy. Do not reproduce. For information visit www.cadcim.com

Saving the Drawing File

1. Choose **Save** from the **Application Menu** to save the drawing file *C06_tut01.dwg*.

Tutorial 2

In this tutorial, you will audit the *C06_tut01.dwg* drawing of the **CADCIM** project by using the **Electrical Audit** and **Drawing Audit** tools and add catalog data to a component in this drawing. You will also surf a component in the *demo004.dwg* drawing. **(Expected time: 20 min)**

The following steps are required to complete this tutorial:

a. Open the drawing.
b. Audit the drawing using the **DWG Audit** tool.
c. Audit the drawing using the **Electrical Audit** tool.
d. Surf the component.
e. Save the drawing file.

Opening the Drawing

1. Right-click on *C06_tut01.dwg* drawing file of the **CADCIM** project in the **Projects** rollout of the **PROJECT MANAGER**; a shortcut menu is displayed. Choose the **Open** option from the shortcut menu; the drawing is opened.

Auditing the Drawing using the DWG Audit Tool

1. Choose the **DWG Audit** tool from the **Schematic** panel of the **Reports** tab; the **Drawing Audit** dialog box is displayed.

2. Select the **Active drawing** radio button, if it is not selected by default. Next, choose the **OK** button; the modified **Drawing Audit** dialog box is displayed.

3. Choose the **OK** button in the modified **Drawing Audit** dialog box; the **Drawing Audit** message box is displayed.

4. Choose the **OK** button in the **Drawing Audit** message box; the **Report: Audit for this drawing** dialog box is displayed.

5. Choose the **Close** button from the **Report: Audit for this drawing** dialog box.

   The visual wire indicators in the diagram are shown in red color, refer to Figure 6-57.

6. Choose **View > Redraw** from the menu bar to eliminate the wire indicators.

Auditing the Drawing Using the Electrical Audit Tool

1. Choose the **Electrical Audit** tool from the **Schematic** panel of the **Reports** tab: the **Electrical Audit** dialog box is displayed. 

Evaluation Copy. Do not reproduce. For information visit www.cadcim.com

2. Select the **Active Drawing** radio button from the **Electrical Audit** dialog box; the errors in the *C06_tut01.dwg* drawing file are displayed in the edit box located on the right of the **Active Drawing** radio button.

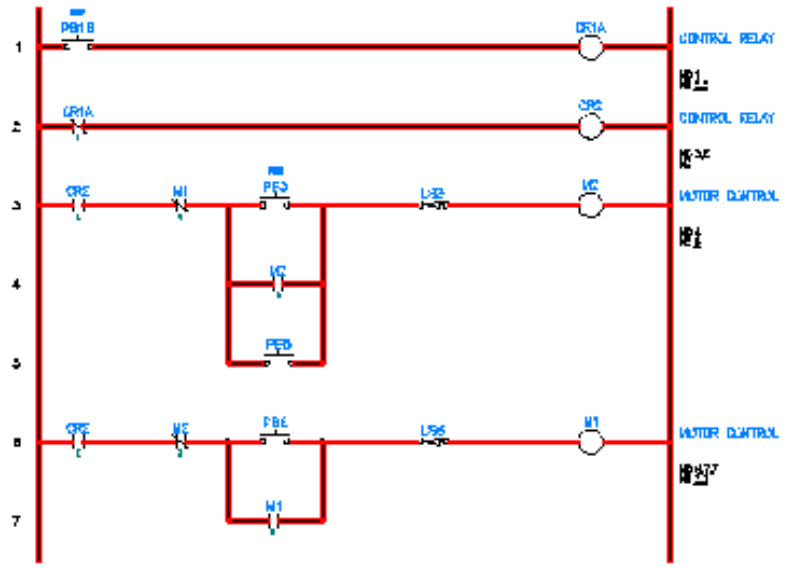

Figure 6-57 *Visual wire indicators indicating wires in the drawing*

3. Choose the **Details** button from the **Electrical Audit** dialog box to expand it.

4. Choose the **Component - No Catalog Number** tab from the **Electrical Audit** dialog box. Next, select the PB1B push button from the **Tag Name** column of this tab. Next, choose the **Go To** button; PB1B push button is zoomed in the drawing area.

Note

*After choosing the **Go To** button, if the **QSAVE** message box is displayed, choose the **OK** button in this message box to save the changes.*

5. Right-click on the PB1B component; a marking menu is displayed. Choose the **Edit Component** option from the marking menu; the **Insert / Edit Component** dialog box is displayed.

6. Choose the **Project** button from the **Catalog Data** area of the **Insert / Edit Component** dialog box; the **Find: Catalog Assignments** dialog box is displayed. Select the **Active Project** radio button, if it is not selected.

7 Choose the **OK** button from the **Find: Catalog Assignments** dialog box; the **HPB11 / VPB11 catalog values(this project)** dialog box is displayed.

Note

*If the **QSAVE** message box is displayed, choose the **OK** button in it to save the changes.*

Evaluation Copy. Do not reproduce. For information visit www.cadcim.com

8. Select the **800T-A2A** catalog number from the **Catalog Number** column and choose the **OK** button from the **HPB11 / VPB11 catalog values** dialog box; AB is displayed in the **Manufacturer** edit box and 800T-A2A is displayed in the **Catalog** edit box of the **Insert / Edit Component** dialog box.

9. Next, choose the **OK** button from the **Insert / Edit Component** dialog box to save the changes and exit this dialog box. Now, you can notice 'x' on the left of the PB1B in the **Electrical Audit** dialog box.

10. Choose the **Close** button from the **Electrical Audit** dialog box.

    In this manner, you can rectify the missing catalog number error from the drawing. Now, you need to check whether an error is rectified or not.

11. Choose the **Electrical Audit** tool from the **Schematic** panel of the **Reports** tab; the **Electrical Audit** dialog box is displayed. Choose the **Active Drawing** button to display the errors in the active drawing.

12. Choose the **Details** button to expand this dialog box. Next, choose the **Component - No Catalog Number** tab from the **Electrical Audit** dialog box.

    You will notice that the selected error is corrected and is not displayed in the **Electrical Audit** dialog box. In other words, PB1B is not displayed in the list.

13. Choose the **Close** button to exit the **Electrical Audit** dialog box.

Surfing the Component

1. Add the *demo002.dwg* drawing from the **NFPADEMO** project to the **CADCIM** project as discussed in Chapter 2.

2. Make sure the **CADCIM** project is activated. Next, open the *demo004.dwg* drawing.

3. Choose the **Surfer** tool from the **Other Tools** panel of the **Project** tab; you are prompted to select tag for surfer trace. Select the **M422** tag corresponding to the ladder reference number 422; the **Surf** dialog box is displayed, as shown in Figure 6-58.

   Notice that the **Surf** dialog box displays all the five normally open contacts of M422 with manufacturer website link address.

4. Select the second entry in the **Surf** dialog box and choose **Go To**; the *demo002.dwg* drawing opens and shows the selected normally open contact zoomed in. Also, 'x' is displayed in the leftmost column of the selected entry to indicate the surfing. Now, close the **Surf** dialog box.

Saving the Drawing File

1. Choose **Save** from the **Application Menu** to save the drawing file.

Evaluation Copy. Do not reproduce. For information visit www.cadcim.com

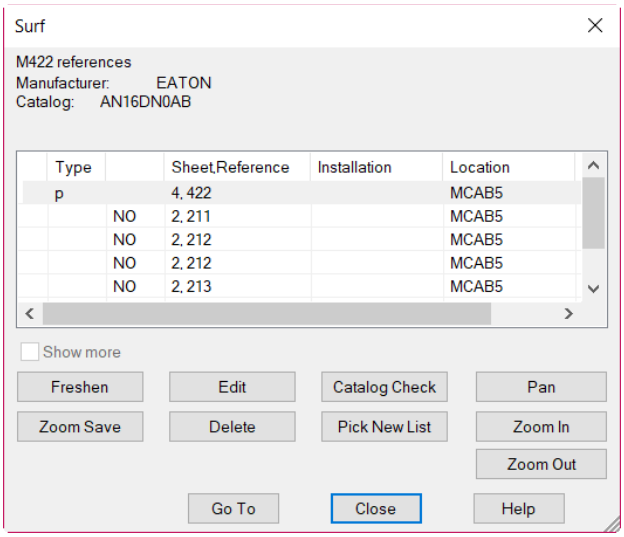

Figure 6-58 *The* ***Surf*** *dialog box*

Tutorial 3

In this tutorial, you will create a schematic drawing. Next, you will add catalog data to one of the components and then copy it to other components. Also, you will add location data to one of the control relay and copy it to the rest of the control relays. **(Expected time: 40 min)**

The following steps are required to complete this tutorial:

a. Create a new drawing.
b. Insert the ladder.
c. Insert components in the ladder.
d. Copy the catalog data.
e. Enter the location data.
f. Save the drawing file.

Creating a New Drawing

1. Choose the **New Drawing** button in the **PROJECT MANAGER**; the **Create New Drawing** dialog box is displayed. Enter **C06_tut03** in the **Name** edit box of the **Drawing File** area.



2. Choose the **Browse** button located on the right of the **Template** edit box; the **Select template** dialog box is displayed. Select the **ACAD_ELECTRICAL** template and choose the **Open** button; the location and path of the template file is displayed in the **Template** edit box.

3. Enter **Schematic Components** in the **Description 1** edit box. Next, choose the **OK** button in the **Create New Drawing** dialog box; the *C06_tut03.dwg* drawing is created and displayed at the bottom of the drawing list in the **CADCIM** project. Now, move *C06_tut03.dwg* to the *TUTORIALS* subfolder of the **CADCIM** project.

Evaluation Copy. Do not reproduce. For information visit www.cadcim.com

Inserting the Ladder

1. Choose the **Insert Ladder** tool from **Schematic > Insert Wires/Wire Numbers > Insert Ladder** drop-down; the **Insert Ladder** dialog box is displayed.



2. Set the following parameters in the **Insert Ladder** dialog box:

Width: **6.000** Spacing: **1.000**
1st Reference: **101** Rungs: **7**

Make sure that the **1Phase** radio button in the **Phase** area and the **Yes** radio button in the **Draw Rungs** area are selected. Do not change values in the rest of the edit boxes.

3. Click in the **Length** edit box; the length of the ladder is automatically calculated and displayed in the edit box. Next, choose the **OK** button; you are prompted to specify the start position of the first rung.

4. Enter **8,13** at the Command prompt and press ENTER; the ladder is inserted into the drawing. Next, choose **View > Zoom > Extents** from the menu bar; the drawing gets zoomed.

Inserting Components in the Ladder

1. Choose the **Icon Menu** tool from **Schematic > Insert Components > Icon Menu** drop-down; the **Insert Component** dialog box is displayed.



2. Select the **Push Buttons** icon from the **NFPA: Schematic Symbols** area of the **Insert Component** dialog box. Next, select the **Push Button NO** icon in the **NFPA: Push Buttons** area; the cursor along with the component is displayed on the screen and you are prompted to specify the insertion point for the push button.

3. Enter **8.5,13** at the Command prompt and press ENTER; the push button is placed at rung 1 and the **Insert / Edit Component** dialog box is displayed. Next, make sure PB101 is displayed in the **Component Tag** edit box and enter **START** in the **Line1** of the **Description** area. Next, choose the **OK** button in the **Insert / Edit Component** dialog box. Similarly, insert other components as mentioned in Table 1.

Table 1 *Components to be inserted in the ladder*

Rung Number	Component to be selected from the **Insert Component** dialog box	Insertion point to be specified at the Command prompt	Component tag values to be specified in the **Component Tag** edit box of the **Insert / Edit Component** dialog box, if it is not already displayed	Descriptions to be specified in the **Description** area of the **Insert / Edit Component** or **Insert / Edit child Component** dialog box
101	Limit Switch, NC	9.5,13	LS101	UP
101	Relay Coil	11.5,13	CR101	CONTROL RELAY

Evaluation Copy. Do not reproduce. For information visit www.cadcim.com

102	Relay NO Contact	9,12	CR101	CONTROL RELAY
103	Relay NO Contact	9,11	CR101	CONTROL RELAY
103	Relay NC Contact	10.5,11	CR 101	CONTROL RELAY
103	1 Phase Motor	12.5,11	MOT103	DOWN MOTOR
104	Relay NO Contact	9,10	CR101	CONTROL RELAY
105	Relay Coil	11.5,9	CR105	CONTROL RELAY
106	Relay Coil	11.5,8	CR106	CONTROL RELAY
106	Relay NC Contact	10.5,8	CR105	CONTROL RELAY
107	Relay NO Contact	9,7	CR106	CONTROL RELAY

4. After entering description and other information in the **Insert / Edit Component** or **Insert / Edit Child Component** dialog box, choose the **OK** button; the components are inserted in the drawing, as shown in Figure 6-59.

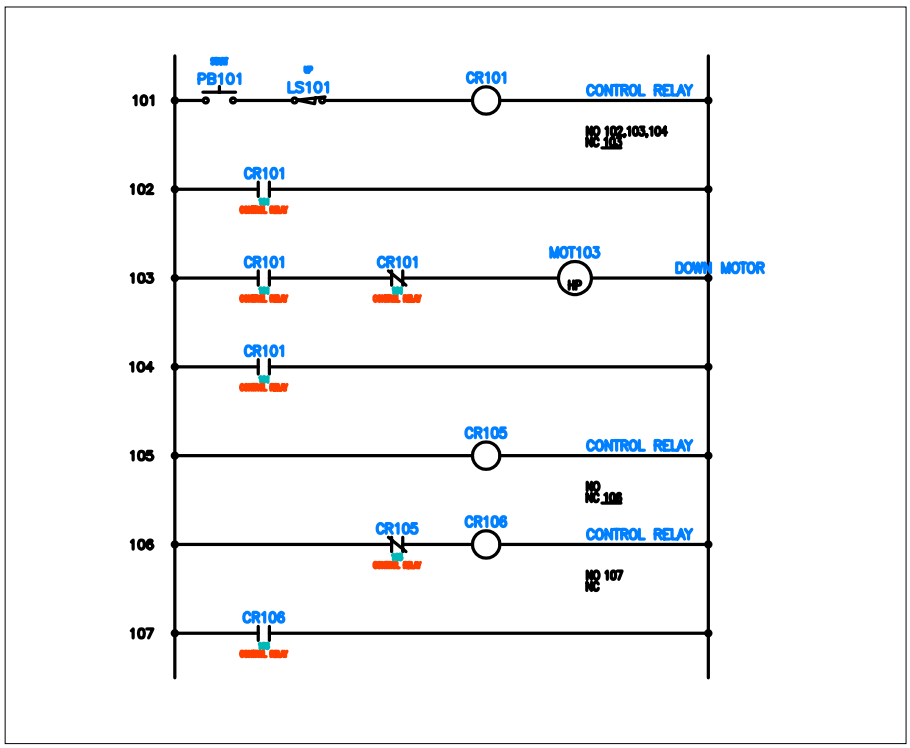

Figure 6-59 *Components inserted in the drawing*

Evaluation Copy. Do not reproduce. For information visit www.cadcim.com

Copying the Catalog Data

1. Choose the **Copy Catalog Assignment** tool from **Schematic > Edit Components > Edit Components** drop-down; you are prompted to select the master component.



2. Select CR101 placed on rung 101 as the master component; the **Copy Catalog Assignment** dialog box is displayed.

3. Choose the **Catalog Lookup** button; the **Catalog Browser** dialog box is displayed, as shown in Figure 6-60.

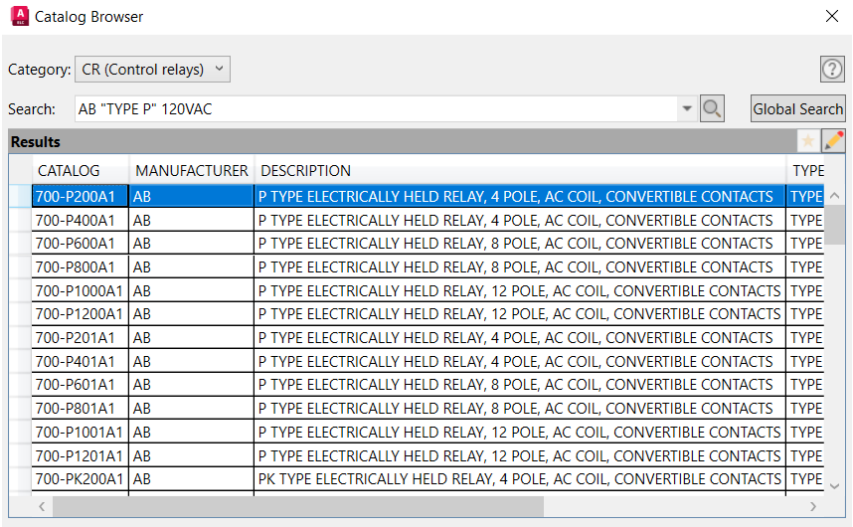

Figure 6-60 *The* ***Catalog Browser*** *dialog box*

4. Select the row which contains **700-P200A1** in its **Catalog** column and then choose the **OK** button; the **Copy Catalog Assignment** dialog box is displayed again. In this dialog box, **AB** is displayed in the **Manufacturer** edit box and **700-P200A1** is displayed in the **Catalog** edit box.

5. Choose the **OK** button from the **Copy Catalog Assignment** dialog box; you are prompted to select the target components.

6. Select CR105 and CR106 placed on rung 105 and rung 106, respectively and press ENTER; the **Update Related Components?** message box is displayed. Choose the **Skip** button; the catalog data is copied to the selected components.



Note

Choose the ***OK*** *button from the* ***QSAVE*** *message box, if it is displayed.*

You need to check the catalog data of CR105 and CR106.

7. Right-click on CR105 and CR106 one by one; a marking menu is displayed. Next, choose the **Edit Component** option; the **Insert / Edit Component** dialog box is displayed. You

Evaluation Copy. Do not reproduce. For information visit www.cadcim.com

will notice that the catalog data information is displayed in the **Catalog Data** area of the **Insert / Edit Component** dialog box. Choose the **OK** button in this dialog box; the **Assign Symbol to Catalog Number** message box is displayed. In this message box, select **Map symbol to catalog number**; the message box is closed.

Entering the Location Data

1. Click on the down arrow given on the right of the **Edit Components** panel of the **Schematic** tab; a flyout will be displayed. Choose the **Copy Installation/Location Code Values** button from the flyout; the **Copy Installation/Location to Components** dialog box is displayed.



2. Make sure the **Location** check box is selected and then enter **MCAB5** in the **Location** edit box. Next, choose the **OK** button; you are prompted to select objects. Next, select CR105 and CR106 placed on rung 105 and rung 106, respectively, and then press ENTER; the **Update Related Components?** message box is displayed.

3. Choose the **Skip** button from the **Update Related Components?** message box; the location codes are assigned to the selected components. If the **QSAVE** message box is displayed, choose the **OK** button from it; the drawings get updated and MCAB5 is displayed on the CR105 and CR106, as shown in Figure 6-61.

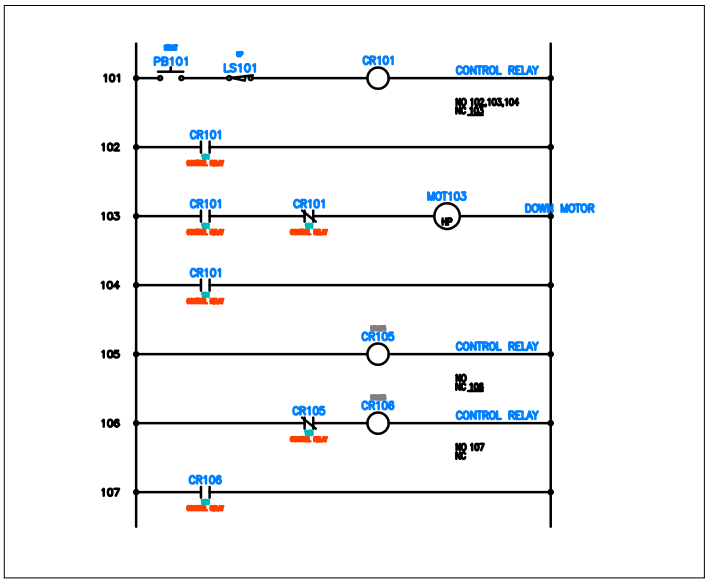

Figure 6-61 *The updated drawing*

Saving the Drawing File

1. Choose **Save** from the **Application Menu** to save the drawing file.

Evaluation Copy. Do not reproduce. For information visit www.cadcim.com

Tutorial 4

In this tutorial, you will update *C06_tut01.dwg* and *C06_tut03.dwg* drawing files using the **Project-Wide Update/Retag** tool. **(Expected time: 15 min)**

The following steps are required to complete this tutorial:

a. Open the drawings.
b. Update the drawings.
c. Save the drawing files.

Opening, Saving, and Adding the Drawings to the CADCIM Project List

1. Open the *C06_tut01.dwg* and *C06_tut03.dwg* files.

   You can also download these files from *www.cadcim.com*. The path of the file is as follows:

   Textbooks > CAD/CAM > AutoCAD Electrical > AutoCAD Electrical 2025 for Electrical Control Designers

2. Save the *C06_tut01.dwg* file with the name *C06_tut01_update.dwg* file and *C06_tut03.dwg* file with the name *C06_tut03_update.dwg* file and add them to the **CADCIM** project list as done earlier.

Updating the Drawings

In this section, you will use the **Update/Retag** tool to update ladder references, component tags, sheet numbers, and wire numbers of *C06_tut01_update.dwg* and *C06_tut03_update.dwg* drawing files.

1. Choose the **Update/Retag** tool from the **Project Tools** panel of the **Project** tab; the **Project-Wide Update or Retag** dialog box is displayed.

2. Select the **Component Retag** and **Wire Number and Signal Tag/Retag** check boxes. Next, choose the **Setup** button located next to the **Wire Number and Signal Tag/Retag** check box; the **Wire Tagging (Project-wide)**dialog box is displayed. Make sure the **Reference-based tags** and the **Tag/retag all** radio buttons are selected in this dialog box Also, select the **Insert as Fixed** check box.

3. Select the **Format override** check box and then enter **%N%S** in the edit box below it, refer to Figure 6-62. Next, choose the **OK** button from the **Wire Tagging (Project-wide)**dialog box to close it.

   Note that **%N** stands for reference number and **%S** stands for sheet value.

4. Select the **Ladder References** check box from the **Project-Wide Update or Retag** dialog box. Make sure that the **Resequence** radio button is selected and then choose the **Setup** button located next to it to renumber the ladder references; the **Renumber Ladders** dialog box is displayed.

Evaluation Copy. Do not reproduce. For information visit www.cadcim.com

5. Enter **60** in the edit box and make sure the **Use next sequential reference** radio button is selected, refer to Figure 6-63. Next, choose **OK** in the **Renumber Ladders** dialog box.

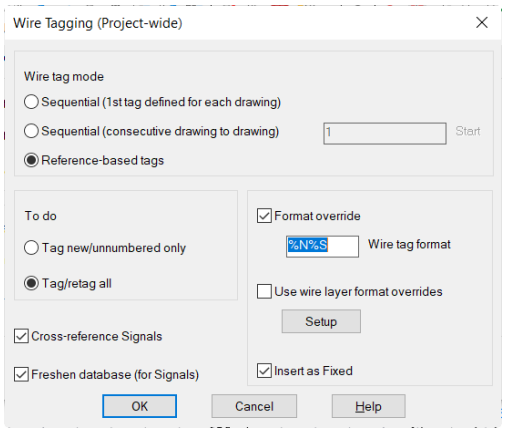

Figure 6-62 *The* ***Wire Tagging (Project-wide)*** *dialog box*

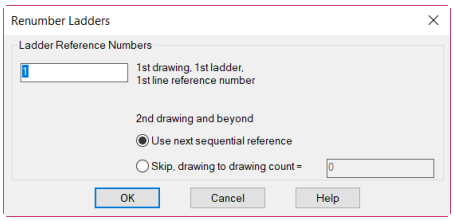

Figure 6-63 *The* ***Renumber Ladders*** *dialog box*

6. Select the **Sheet (%S value)** check box from the **Project-Wide Update or Retag** dialog box. Make sure the **Resequence - Start with** radio button is selected and enter **01** in the edit box located next to it.

7. Choose **OK** from the **Project-Wide Update or Retag** dialog box; the **Select Drawings to Process** dialog box is displayed.

8. Select *C06_tut01_update.dwg* and *C06_tut03_update.dwg* drawing files from the upper part of the **Select Drawings to Process** dialog box and choose **Process**; the selected drawings files are transferred to the lower part of the dialog box. Next, choose **OK**; updation of the selected drawing files starts and the messages are displayed in the command prompt. Once the updation process is completed, you will notice change in the ladder reference numbers, component tags, and wire numbers of both the drawing files.

Saving the Drawing File

1. Choose **Save** from the **Application Menu** to save the *C06_tut01_update.dwg* and *C06_tut03_update.dwg* drawing files.

Self-Evaluation Test

Answer the following questions and then compare them to those given at the end of this chapter:

1. Which of the following commands is used to copy components?

(a) **AECOMPONENT** (b) **AECOPYCOMP**
(c) **AEWIRE** (d) **AEAUDIT**

Evaluation Copy. Do not reproduce. For information visit www.cadcim.com

2. The default format for component tagging is _____.

3. The _____ tool is used to change the text size and width of attributes.

4 The _____ tool is used to update or retag components.

5. The _____ tool is used to copy the selected components.

6. The _____ button of the **Electrical Auditing** dialog box is used to display the detailed information of the errors found in a project.

7. You can scoot a component in any direction. (T/F)

8. You can align components only vertically. (T/F)

9. The **Electrical Audit** tool is used to correct errors in a project. (T/F)

10. You cannot print an auditing report. (T/F)

Review Questions

Answer the following questions:

1. Which of the following tabs of the **Electrical Audit** dialog box displays the missing or duplicated wire numbers in a project?

(a) **Cable Exception** (b) **Component - No Connection**
(c) **Wire Exception** (d) **Wire - No Connection**

2. Which of the following buttons is used to align components vertically or horizontally?

(a) **Move** (b) **Pick Master**
(c) **Scoot** (d) **Align**

3. Which of the following buttons is used to change the state of a normally open (NO) component to a normally closed (NC) and vice-versa?

(a) **Toggle NO/NC** (b) **Project-Wide Update/Retag**
(c) **Setup** (d) **Copy Component**

4. Which of the following check boxes should be selected to retag all non-fixed components of the drawing(s)?

(a) **Component Cross-Reference Update** (b) **Wire gap pointers**
(c) **Wire Number and Signal Tag/Retag** (d) **Component Retag**

5. When you choose the **Go To** button in the **Electrical Audit** dialog box, AutoCAD Electrical takes you to the error location in the project and rectify the error. (T/F)

Evaluation Copy. Do not reproduce. For information visit www.cadcim.com

6. If you select the **Title Block Update** check box, the title block information of only the active drawing will be updated. (T/F)

7. By choosing the **Move Component** button, you can reposition a selected component from its current location or wire location and insert it at a new location. (T/F)

8. The auditing tools find out errors in project drawings. (T/F)

9. The **Move/Show Attribute** tool is used to move attributes. (T/F)

EXERCISES

Exercise 1

In this exercise, you will create a new drawing named *C06_exer01.dwg* and insert a ladder with Width = 5, Spacing= 1, Rungs = 6, and 1st reference = 500. Also, you will insert components in the ladder, as shown in Figure 6-64. In addition, you will use the basic editing tools such as **Copy Component** and **Align Component** to copy and align the components, respectively. You will use the **Wire** tool to insert wire between rung 500 and rung 501 and the **Trim Wire** tool to trim the wire. **(Expected time: 25 min)**

Exercise 2

In this exercise, you will audit the **NEW_PROJECT** project using the **DWG Audit** and **Electrical Audit** tools. Also, you will save the report on the desktop as *drawing_audit.txt* and *electrical_audit.txt*. **(Expected time: 15 min)**

Exercise 3

In this exercise, you will open the *C06_exer01.dwg* drawing file and save it as *C06_exer03.dwg* in the **NEW_PROJECT** project. Next, you will change ladder references, component tags, and cross-references from reference-based to sequential using the **Update/Retag** tool, refer to Figure 6-65. **(Expected time: 20 min)**

Evaluation Copy. Do not reproduce. For information visit www.cadcim.com

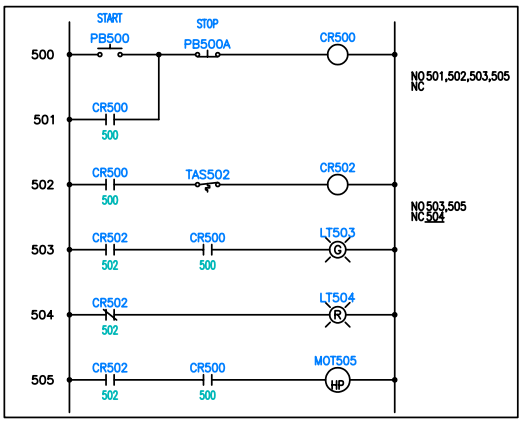

Figure 6-64 *Components inserted in the ladder*

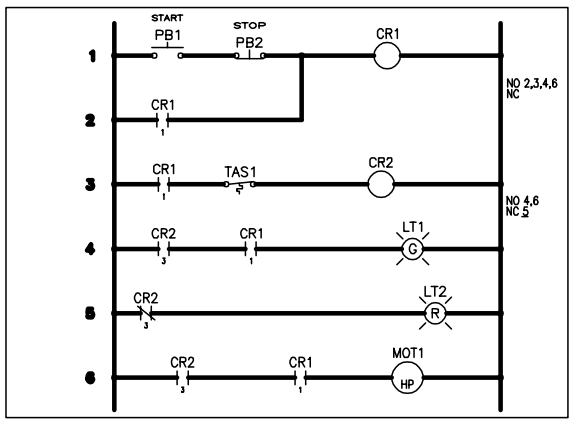

Figure 6-65 *References changed using the* ***Update/Retag*** *tool*

Hint: Enter **1** in the edit box on the right of the **Sequential** radio button in the **Change Each Drawing's Settings - Project-wide** dialog box.

Answers to Self-Evaluation Test

1. b, **2.** %F%N, **3. Change Attribute Size**, **4. Update/Retag**, **5. Copy Component**, **6. Details**, **7.** F, **8.** F, **9.** T, **10.** F

Evaluation Copy. Do not reproduce. For information visit www.cadcim.com