Chapter 1

Introduction to SOLIDWORKS 2025

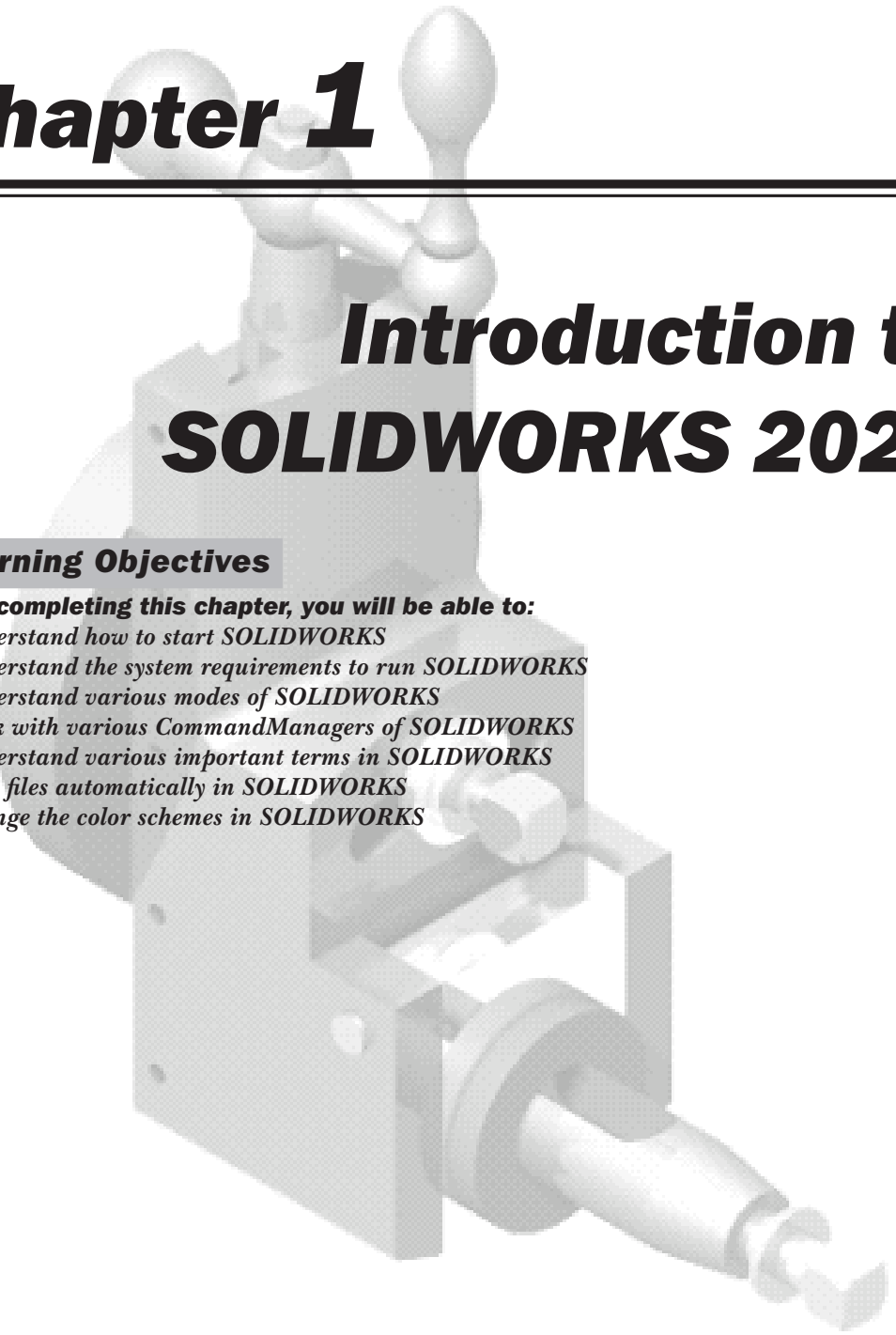

Learning Objectives

After completing this chapter, you will be able to:

- *Understand how to start SOLIDWORKS*
- *Understand the system requirements to run SOLIDWORKS*
- *Understand various modes of SOLIDWORKS*
- *Work with various CommandManagers of SOLIDWORKS*
- *Understand various important terms in SOLIDWORKS*
- *Save files automatically in SOLIDWORKS*
- *Change the color schemes in SOLIDWORKS*

INTRODUCTION TO SOLIDWORKS 2025

Welcome to the world of Computer Aided Design (CAD) with SOLIDWORKS. If you are a new user of this software package, you will be joining hands with thousands of users of this parametric, feature-based, and one of the most user-friendly software packages. If you are familiar with the previous releases of this software, you will be able to upgrade your designing skills with this improved release of SOLIDWORKS.

SOLIDWORKS, developed by the SOLIDWORKS Corporation, USA, is a feature-based, parametric solid-modeling mechanical design and automation software. SOLIDWORKS is the first CAD package to use the Microsoft Windows graphical user interface. The use of the drag and drop (DD) functionality of Windows makes this CAD package extremely easy to learn. The Windows graphic user interface makes it possible for the mechanical design engineers to innovate their ideas and implement them in the form of virtual prototypes or solid models, large assemblies, subassemblies, and detailing and drafting.

SOLIDWORKS is one of the products of SOLIDWORKS Corporation, which is a part of Dassault Systemes. SOLIDWORKS also works as platform software for a number of software. This implies that you can also use other compatible software within the SOLIDWORKS window. There are a number of software provided by the SOLIDWORKS Corporation, which can be used as add-ins with SOLIDWORKS. Some of the software that can be used on SOLIDWORKS's work platform are listed below:

SOLIDWORKS Motion	SOLIDWORKS Routing	ScanTo3D	eDrawings
SOLIDWORKS Simulation	SOLIDWORKS Toolbox	PhotoView 360	CircuitWorks
SOLIDWORKS Plastics	SOLIDWORKS Inspection	TolAnalyst	

As mentioned earlier, SOLIDWORKS is a parametric, feature-based, and easy-to-use mechanical design automation software. It enables you to convert the basic 2D sketch into a solid model by using simple but highly effective modeling tools. It also enables you to create the virtual prototype of a sheet metal component and the flat pattern of the component. This helps you in the complete process planning for designing and creating a press tool. SOLIDWORKS helps you to extract the core and the cavity of a model that has to be molded or cast. With SOLIDWORKS, you can also create complex parametric shapes in the form of surfaces. Some of the important modes of SOLIDWORKS are discussed next.

Part Mode

The **Part** mode of SOLIDWORKS is a feature-based parametric environment in which you can create solid models. In this mode, you are provided with three default planes named as **Front Plane**, **Top Plane**, and **Right Plane**. First, you need to select a sketching plane to create a sketch for the base feature. On selecting a sketching plane, you enter the sketching environment. The sketches for the model are drawn in the sketching environment using easy-to-use tools. After drawing the sketches, you can dimension them and apply the required relations in the same sketching environment. The design intent is captured easily by adding relations and equations and using the design table in the design. You are provided with the standard hole library known as the **Hole Wizard** in the **Part** mode. You can create simple holes, tapped holes, counterbore holes, countersink holes, and so on by using this wizard. The holes can be of any standard such as

Evaluation Copy. Do not reproduce. For information visit www.cadcim.com

ISO, ANSI, JIS, and so on. You can also create complicated surfaces by using the surface modeling tools available in the **Part** mode. Annotations such as weld symbols, geometric tolerance, datum references, and surface finish symbols can be added to the model within the **Part** mode. The standard features that are used frequently can be saved as library features and retrieved when needed. The palette feature library of SOLIDWORKS contains a number of standard mechanical parts and features. You can also create the sheet metal components in this mode of SOLIDWORKS by using the related tools. Besides this, you can also analyze the part model for various stresses applied to it in the real physical conditions by using an easy and user-friendly tool called SimulationXpress. It helps you reduce the cost and time in physically testing your design in real testing conditions (destructive tests). You can also analyze the component during modeling in the SOLIDWORKS windows. In addition, you can work with the weld modeling within the **Part** mode of SOLIDWORKS by creating steel structures and adding weld beads. All standard weld types and welding conditions are available for your reference. You can extract the core and the cavity in the **Part** mode by using the mold design tools.

Assembly Mode

In the **Assembly** mode, you can assemble components of the assembly with the help of the required tools. There are two methods of assembling the components:

1. Bottom-up assembly
2. Top-down assembly

In the bottom-up assembly method, the assembly is created by assembling the components created earlier and maintaining their design intent. In the top-down method, the components are created in the assembly mode. You may begin with some ready-made parts and then create other components in the context of the assembly. You can refer to the features of some components of the assembly to drive the dimensions of other components. You can assemble all components of an assembly by using a single tool, the **Mate** tool. While assembling the components of an assembly, you can also animate the assembly by dragging. Besides this, you can also check the working of your assembly. Collision detection is one of the important features in this mode. Using this feature, you can rotate and move components as well as detect the interference and collision between the assembled components. You can see the realistic motion of the assembly by using physical dynamics. Physical simulation is used to simulate the assembly with the effects of motors, springs, and gravity on the assemblies.

Drawing Mode

The **Drawing** mode is used for the documentation of the parts or the assemblies created earlier in the form of drawing views. The procedure for creating drawing views is called drafting. There are two types of drafting done in SOLIDWORKS:

1. Generative drafting
2. Interactive drafting

Evaluation Copy. Do not reproduce. For information visit www.cadcim.com

Generative drafting is a process of generating drawing views of a part or an assembly created earlier. The parametric dimensions and the annotations added to the component in the **Part** mode can be generated in the drawing views. Generative drafting is bidirectionally associative in nature. Automatic BOMs and balloons can be added to an assembly while generating the drawing views of it.

In interactive drafting, you have to create the drawing views by sketching them using normal sketching tools and then add dimensions to them.

SYSTEM REQUIREMENTS

The system requirements to ensure the smooth functioning of SOLIDWORKS on your system are as follows:

- Microsoft Windows 11/10 (64-bit).
- Intel i5, i7 or equivalent AMD Processor.
- 16 GB or more RAM.
- Standard or Solid State Drive (SSD) > 250GB, keeping 10% drive capacity free space.
- A certified graphics card and driver.
- Adobe Acrobat higher than 8.0.7 or any similar program.
- Mouse or any other compatible pointing device.
- Internet Explorer version 8 or higher.

GETTING STARTED WITH SOLIDWORKS

Install SOLIDWORKS 2025 on your system. On doing so, a shortcut icon of SOLIDWORKS 2025 will automatically be created on the desktop. Double-click on this icon; the system will prepare to start SOLIDWORKS and after sometime, the SOLIDWORKS window will be displayed on the screen. On opening SOLIDWORKS for the first time, the **SOLIDWORKS License Agreement** dialog box will be displayed, as shown in Figure 1-1. Choose the **Accept** button in this dialog box; the **SOLIDWORKS 2025** window will open and the **3DEXPERIENCE Marketplace** task pane will be displayed on the right. Also, the **Welcome - SOLIDWORKS** dialog box will be invoked simultaneously, as shown in Figure 1-2. This window can be used to open a new file or an existing file.

Evaluation Copy. Do not reproduce. For information visit www.cadcim.com

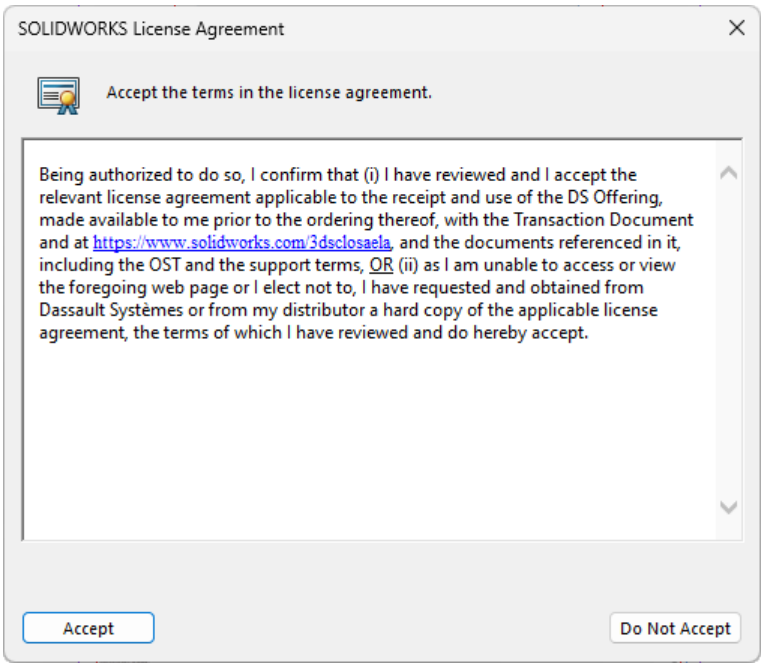

Figure 1-1 *The* ***SOLIDWORKS License Agreement*** *dialog box*

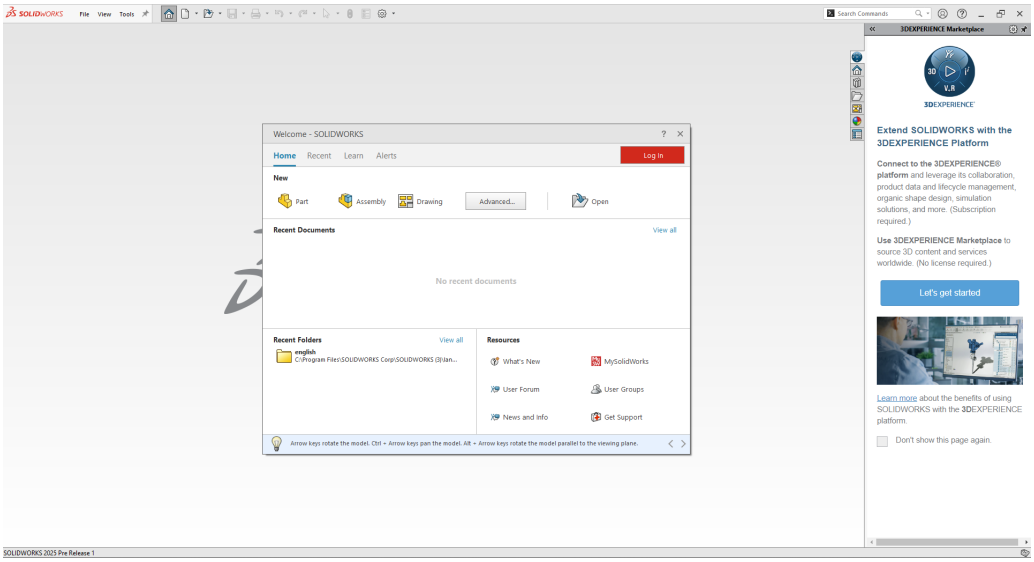

Figure 1-2 *The* ***SOLIDWORKS 2025*** *window and the 3DEXPERIENCE Marketplace task pane*

You can also choose the **SOLIDWORKS Resources** button located on the right side of the window to display the **SOLIDWORKS Resources** task pane. This task pane can be used to open online tutorials and to visit the website of SOLIDWORKS partners. Choose the **Part** button from the **Welcome - SOLIDWORKS** dialog box or the **New** button from the Menu Bar to create a new

Evaluation Copy. Do not reproduce. For information visit www.cadcim.com

document. If you start a new document using the **New** button from the Menu Bar then the **New SOLIDWORKS Document** dialog box will be displayed, as shown in Figure 1-3.



Note

*If you are starting SOLIDWORKS 2025 for the first time, then on invoking the **New SOLIDWORKS Document** dialog box or the **Welcome - SOLIDWORKS** dialog box, the **Units and Dimension Standard** dialog box will be displayed, as shown in Figure 1-4. Using this dialog box, you can specify the default units and dimension standards for SOLIDWORKS. In this book, the unit system used is MMGS (millimeter, gram, second) and the dimension standard used is ISO.*

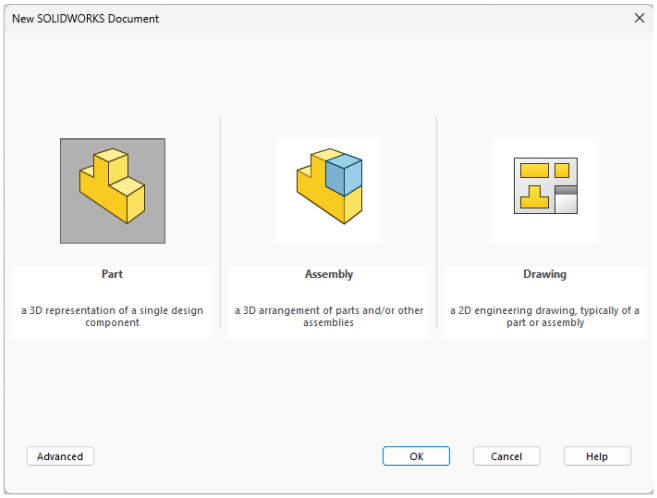

Figure 1-3 *The **New SOLIDWORKS Document** dialog box*

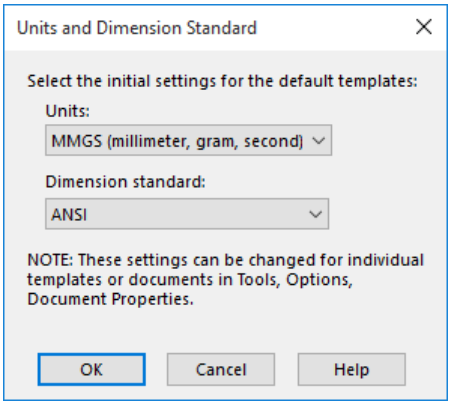

Figure 1-4 *The **Units and Dimension Standard** dialog box*

Choose the **Part** button to create a part model and then choose the **OK** button from the **New SOLIDWORKS Document** dialog box to enter the **Part** mode of SOLIDWORKS. Note that the task pane is automatically closed once you start a new file and click in the drawing area. The initial screen display on starting a new part file of SOLIDWORKS using the **New** button in the Menu Bar is shown in Figure 1-5.

Evaluation Copy. Do not reproduce. For information visit www.cadcim.com

Tip

In SOLIDWORKS, the tip of the day is displayed at the bottom of the ***Welcome - SOLIDWORKS*** *dialog box. You can click on the arrows to view additional tips. These tips help you use SOLIDWORKS efficiently. It is recommended that you view at least 2 or 3 tips every time you start a new session of SOLIDWORKS 2025.*

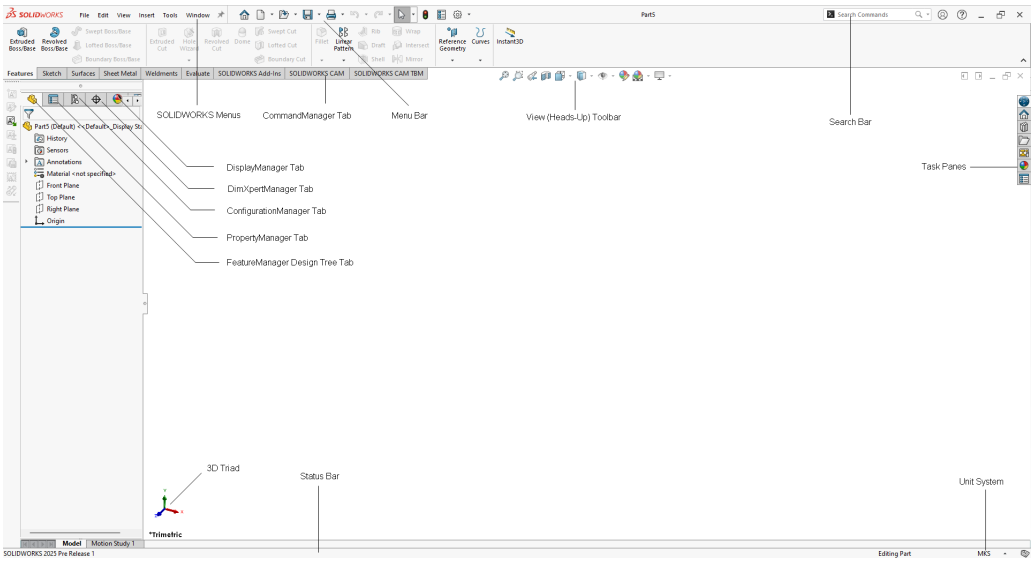

Figure 1-5 *The components of a new part document*

It is evident from the screen that SOLIDWORKS is a very user-friendly solid modeling software. Apart from the default CommandManager shown in Figure 1-5, you can also invoke other CommandManagers. To do so, move the cursor on a CommandManager tab and right-click; a shortcut menu will be displayed. Choose the required CommandManager from the shortcut menu; it will be added. Besides the existing CommandManager, you can also create a new CommandManager.

MENU BAR AND SOLIDWORKS MENUS

In SOLIDWORKS, the display area of the screen has been increased by grouping tools with similar functions or purposes. For example, the tools in the **Standard** toolbar are also available in the Menu Bar, as shown in Figure 1-6. However, the **Standard** toolbar is not visible by default. To make it visible, you need to right-click in the Ribbon, expand the **Toolbars** flyout, and select the **Standard** option. The Menu Bar is located above the drawing area and displays various commands. The SOLIDWORKS Menus are also located at the top of the drawing area, next to the SOLIDWORKS logo, and contain a variety of tools that help you save, edit, and insert components or perform other operations, refer to Figure 1-7. You can fix or unfix the position of the Menu Bar by clicking the push pin button located next to the SOLIDWORKS Menus.

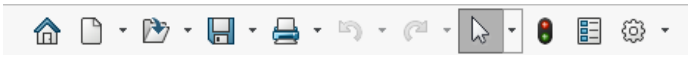

Figure 1-6 *The Menu Bar*

Evaluation Copy. Do not reproduce. For information visit www.cadcim.com



Figure 1-7 The SOLIDWORKS Menus

CommandManager

You can invoke a tool in SOLIDWORKS from four locations, CommandManager, SOLIDWORKS menus on top of the screen, toolbar, and shortcut menu. The CommandManagers are docked above the drawing area. While working with CommandManager, you will realize that invoking a tool from the CommandManager is the most convenient method to invoke a tool. Different types of CommandManagers are used for different design environments. These CommandManagers are discussed next.

Part Mode CommandManagers

A number of CommandManagers can be invoked in the **Part** mode. The CommandManagers that are extensively used during the designing process in this environment are described next.

Sketch CommandManager

This CommandManager is used to enter and exit the 2D and 3D sketching environments. The tools available in this CommandManager are used to draw sketches for features. This CommandManager is also used to add relations and smart dimensions to the sketched entities. The **Sketch CommandManager** is shown in Figure 1-8.

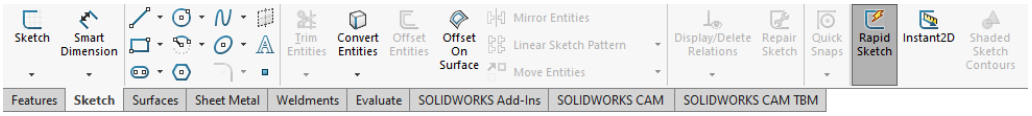

*Figure 1-8 The **Sketch CommandManager***



Tip

*You can collapse the CommandManager to show only the tabs until you want to access the tools. To collapse the CommandManager, click on the **Collapse CommandManager** button available at the right of the Ribbon. In the collapsed view, click a tab to expand the CommandManager and access the tools. In the expanded view, click on the **Pin CommandManager** button to keep the CommandManager expanded.*

Features CommandManager

This is one of the most important CommandManagers provided in the **Part** mode. Once the sketch has been drawn, you need to convert the sketch into a feature by using the modeling tools. This CommandManager contains all the modeling tools that are used for feature-based solid modeling. The **Features CommandManager** is shown in Figure 1-9.

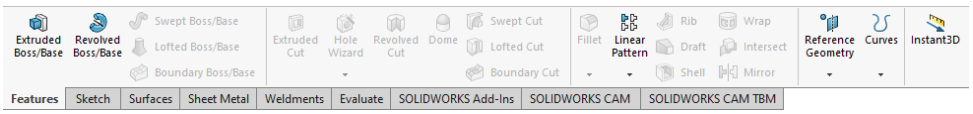

*Figure 1-9 The **Features CommandManager***

Evaluation Copy. Do not reproduce. For information visit www.cadcim.com

MBD Dimensions CommandManager

This CommandManager is used to add dimensions and tolerances to the features of a part. The **MBD Dimensions CommandManager** is shown in Figure 1-10.



Figure 1-10 The MBD Dimensions CommandManager

Sheet Metal CommandManager

This CommandManager provides you the tools that are used to create the sheet metal parts. In SOLIDWORKS, you can also create sheet metal parts while working in the **Part** mode. This is done with the help of the **Sheet Metal CommandManager** shown in Figure 1-11.

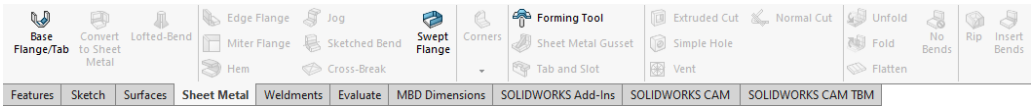

Figure 1-11 The Sheet Metal CommandManager

Mold Tools CommandManager

The tools in this CommandManager are used to design a mold and to extract its core and cavity. The **Mold Tools CommandManager** is shown in Figure 1-12.

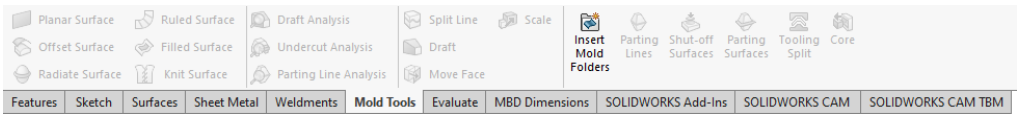

Figure 1-12 The Mold Tools CommandManager

Evaluate CommandManager

This CommandManager is used to measure the distance between two entities, add equations in the design, calculate the mass properties of a solid model, and so on. The **Evaluate CommandManager** is shown in Figure 1-13.

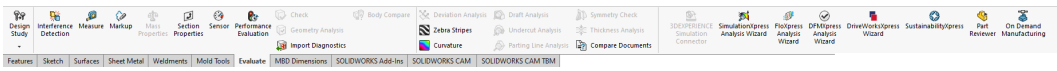

Figure 1-13 The Evaluate CommandManager

Surfaces CommandManager

This CommandManager is used to create complicated surface features. These surface features can be converted into solid features. The **Surfaces CommandManager** is shown in Figure 1-14.

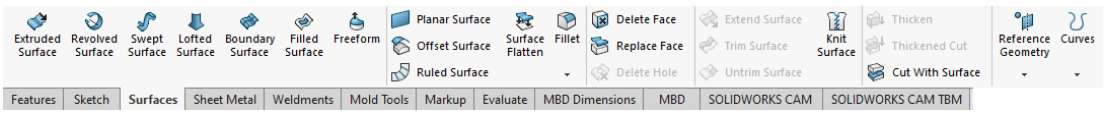

Figure 1-14 The Surfaces CommandManager

Evaluation Copy. Do not reproduce. For information visit www.cadcim.com

Direct Editing CommandManager

This CommandManager consists of tools that are used for editing a feature, refer to Figure 1-15.

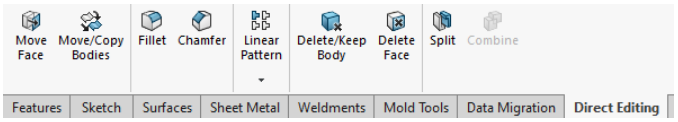

*Figure 1-15 The **Direct Editing CommandManager***

Data Migration CommandManager

This CommandManager consist of tools that are used to work with the models created in other packages or in different environments, refer to Figure 1-16.

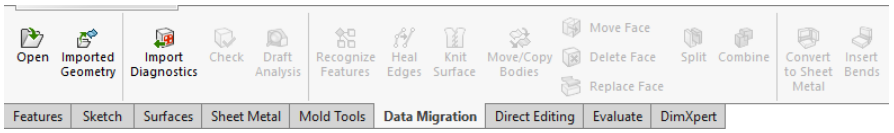

*Figure 1-16 The **Data Migration CommandManager***

Assembly Mode CommandManagers

The CommandManagers in the **Assembly** mode are used to assemble the components, create an explode line sketch, and simulate the assembly. The CommandManagers in the **Assembly** mode are discussed next.

Assembly CommandManager

This CommandManager is used to insert a component and apply various types of mates to the assembly. Mates are the constraints that can be applied to components to restrict their degrees of freedom. You can also move and rotate a component in the assembly, change the hidden and suppression states of the assembly and individual components, edit the component of an assembly, and so on. The **Assembly CommandManager** is shown in Figure 1-17.

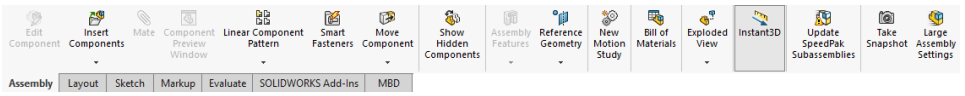

*Figure 1-17 The **Assembly CommandManager***

Layout CommandManager

The tools in this CommandManager are used to create and edit blocks, refer to Figure 1-18.



*Figure 1-18 The **Layout CommandManager***

Drawing Mode CommandManagers

You can invoke a number of CommandManagers in the **Drawing** mode. The CommandManagers that are extensively used during the designing process in this mode are discussed next.

Evaluation Copy. Do not reproduce. For information visit www.cadcim.com

Drawing CommandManager

This CommandManager is used to generate the drawing views of an existing model or an assembly. The views that can be generated using this CommandManager are model view, three standard views, projected view, section view, aligned section view, detail view, crop view, relative view, auxiliary view, and so on. The **Drawing CommandManager** is shown in Figure 1-19.

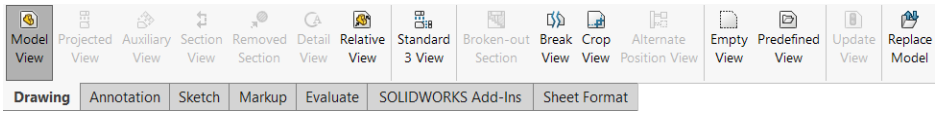

*Figure 1-19 The **Drawing CommandManager***

Annotation CommandManager

The **Annotation CommandManager** is used to generate the model items and to add notes, balloons, geometric tolerance, surface finish symbols, and so on to the drawing views. The **Annotation CommandManager** is shown in Figure 1-20.

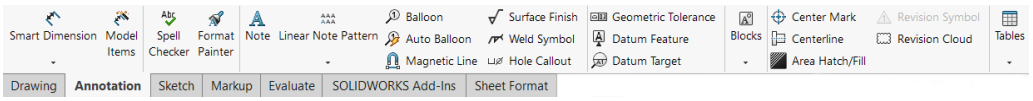

*Figure 1-20 The **Annotation CommandManager***

Customized CommandManager

If you often work on a particular set of tools, you can create a customized CommandManager to cater to your needs. To do so, right-click on a tab in the CommandManager; a shortcut menu will be displayed. Choose the **Customize** option from the shortcut menu; the **Customize** dialog box will be displayed. Also, a new tab will be added to the CommandManager. Click on this tab; a flyout will be displayed with **Empty Tab** as the first option and followed by the list of toolbars. Choose the **Empty Tab** option; another tab named **New Tab** will be added to the CommandManager. Rename the new tab. Next, choose the **Commands** tab from the **Customize** dialog box. Select a category from the **Toolbars** list box; the tools under the selected category will be displayed in the **Buttons** area. Select a tool, press and hold the left mouse button, and drag the tool to the customized CommandManager; the tool will be added to the customized CommandManager. Choose the **OK** button from the **Customize** dialog box.

To add all the tools of a toolbar to the new CommandManager, invoke the **Customize** dialog box and click on the new tab; a flyout will be displayed with **Empty Tab** as the first option followed by the list of toolbars. Choose a toolbar from the flyout; all tools in the toolbar will be added to the **New Tab** and its name will be changed to that of the toolbar.

To delete a customized CommandManager, invoke the **Customize** dialog box as discussed earlier. Next, choose the CommandManager tab to be deleted and right-click; a shortcut menu will be displayed. Choose the **Delete** option from the shortcut menu; the CommandManager will be deleted.



Note

You cannot delete the default CommandManagers.

Evaluation Copy. Do not reproduce. For information visit www.cadcim.com

TOOLBAR

In SOLIDWORKS, you can choose most of the tools from the CommandManager or from the SOLIDWORKS menus. However, if you hide the CommandManager to increase the drawing area, you can use the toolbars to invoke a tool. To display a toolbar, right-click on the CommandManager; the list of toolbars available in SOLIDWORKS will be displayed. Select the required toolbar.

Pop-up Toolbar

A pop-up toolbar will be displayed when you select a feature or an entity and do not move the mouse. Figure 1-21 shows a pop-up toolbar displayed on selecting a feature. Remember that this toolbar will disappear if you move the cursor away from the selected feature or entity.



Figure 1-21 *The pop-up toolbar*

You can switch off the display of the pop-up toolbar. To do so, invoke the **Customize** dialog box. In the **Context toolbar** area of the **Toolbars** tab, the **Show on selection** check box will be selected by default. It means that the display of the pop-up toolbar is on, by default. To turn off the display of the pop-up toolbar, clear this check box and choose the **OK** button.

View (Heads-Up) Toolbar

In SOLIDWORKS, some of the display tools have been grouped together and are displayed in the drawing area in a toolbar, as shown in Figure 1-22. This toolbar is known as **View (Heads-Up)** toolbar.



Figure 1-22 *The **View (Heads-Up)** toolbar*

Customizing the CommandManagers and Toolbars

In SOLIDWORKS, all buttons are not displayed by default in toolbars or CommandManagers. You need to customize and add buttons to them according to your need and specifications. Follow the procedure given below to customize the CommandManagers and toolbars:

1. Choose **Tools > Customize** from the SOLIDWORKS menus or right-click on a CommandManager and choose the **Customize** option to display the **Customize** dialog box.
2. Choose the **Commands** tab from the **Customize** dialog box.
3. Select a category from the **Toolbars** list box of the **Customize** dialog box; the tools available in the selected category will be displayed in the **Buttons** area.
4. Click on a button in the **Buttons** area; the description of the selected button will be displayed in the **Description** area.
5. Press and hold the left mouse button on a button in the **Buttons** area of the **Customize** dialog box.
6. Drag the mouse to a CommandManager or a toolbar and then release the left mouse button to place the button on that CommandManager or toolbar. Next, choose **OK**.

To remove a tool from the CommandManager or toolbar, invoke the **Customize** dialog box and drag the tool that you need to remove from the CommandManager to the graphics area.

Evaluation Copy. Do not reproduce. For information visit www.cadcim.com

Shortcut Bar

On pressing the S key on the keyboard, some of the tools that can be used in the current mode will be displayed near the cursor. This is called as shortcut bar. To customize the tools in the shortcut bar, right-click on it, and choose the **Customize** option. Then, follow the procedure discussed earlier.

Mouse Gestures

In SOLIDWORKS, when you press the right mouse button and drag the cursor in any direction, a set of tools that are arranged radially will be displayed. This is called as Mouse Gesture. After displaying the tools by using the Mouse Gesture, move the cursor over a particular tool to invoke it. By default, four tools will be displayed in a Mouse Gesture. However, you can customize the Mouse Gesture and display 2, 3, 4, 8 or 12 tools. To customize a Mouse Gesture, invoke the **Customize** dialog box. Next, choose the **Mouse Gestures** tab; the **Mouse Gesture Guide** window will be displayed, showing various tools that are used in different environments, refer to Figure 1-23. Now you can drag and drop the required tools to this window. Next, specify the options in the appropriate field and choose the **OK** button.

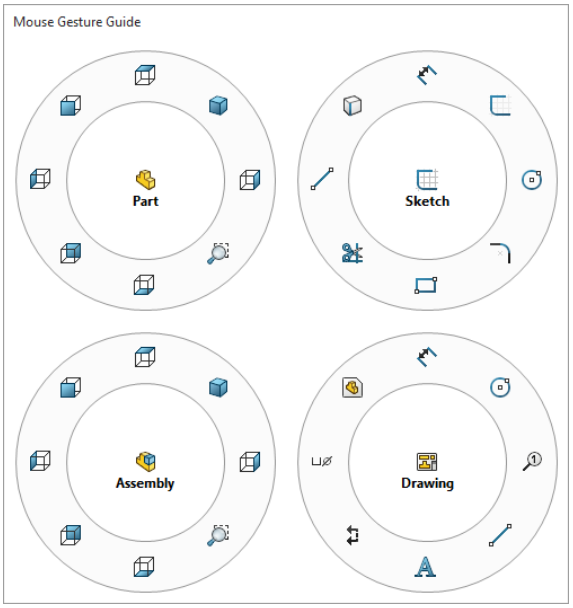

Figure 1-23 *Tools displayed in the* ***Mouse Gesture Guide*** *window in different environments*



Tip

You can display some of the tools by pressing a key on the keyboard. To assign a shortcut key to a tool, invoke the ***Customize*** *toolbar and choose the* ***Keyboard*** *tab. Enter the key in the* ***Shortcut*** *column for the corresponding tool and choose* ***OK****.*

Evaluation Copy. Do not reproduce. For information visit www.cadcim.com

DIMENSIONING STANDARDS AND UNITS

While installing SOLIDWORKS on your system, you can specify the units and dimensioning standards for dimensioning the model. There are various dimensioning standards such as ANSI, ISO, DIN, JIS, BSI, and GOST that can be specified for dimensioning a model and units such as millimeters, centimeters, inches, and so on. This book follows millimeters as the unit for dimensioning and ISO as the dimension standard. Therefore, it is recommended that you install SOLIDWORKS with ISO as the dimensioning standard and millimeter as units.

IMPORTANT TERMS AND THEIR DEFINITIONS

Before you proceed, it is very important to understand the following terms as they have been widely used in this book.

Feature-based Modeling

A feature is defined as the smallest building block that can be modified individually. In SOLIDWORKS, the solid models are created by integrating a number of these building blocks. A model created in SOLIDWORKS is a combination of a number of individual features that are related to one another, directly or indirectly. These features understand their fits and functions properly and therefore can be modified at any time during the design process. If proper design intent is maintained while creating the model, these features automatically adjust their values to any change in their surrounding. This provides greater flexibility to the design.

Parametric Modeling

The parametric nature of a software package is defined as its ability to use the standard properties or parameters in defining the shape and size of a geometry. The main function of this property is to drive the selected geometry to a new size or shape without considering its original dimensions. You can change or modify the shape and size of any feature at any stage of the design process. This property makes the designing process very easy.

For example, consider the design of the body of a pipe housing shown in Figure 1-24. In order to change the design by modifying the diameter of the holes and the number of holes on the front, top, and bottom faces, you need to select the feature and change the diameter and the number of instances in the pattern. The modified design is shown in Figure 1-25.

Evaluation Copy. Do not reproduce. For information visit www.cadcim.com

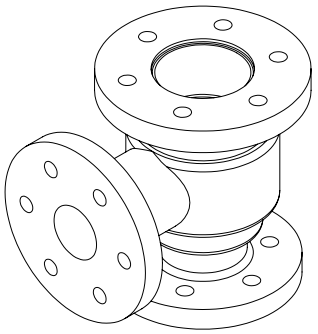

Figure 1-24 *Body of pipe housing*

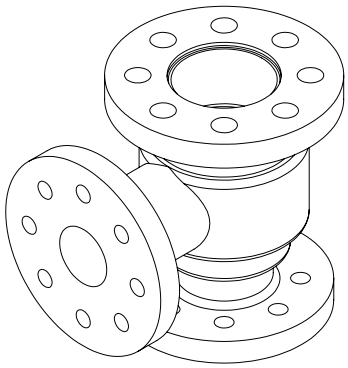

Figure 1-25 *Design after modifications*

Bidirectional Associativity

As mentioned earlier, SOLIDWORKS has different modes such as **Part**, **Assembly**, and **Drawing**. There exists bidirectional associativity among all these modes. This associativity ensures that any modification made in the model in any one of these modes of SOLIDWORKS is automatically reflected in the other modes immediately. For example, if you modify the dimension of a part in the **Part** mode, the change will reflect in the **Assembly** and **Drawing** modes as well. Similarly, if you modify the dimensions of a part in the drawing views generated in the **Drawing** mode, the changes will reflect in the **Part** and **Assembly** modes. Consider the drawing views shown in Figure 1-26 of the body of the pipe housing shown in Figure 1-24. Now, when you modify the model of the body of the pipe housing in the **Part** mode, the changes will reflect in the **Drawing** mode automatically. Figure 1-27 shows the drawing views of the pipe housing after increasing the diameter and the number of holes.

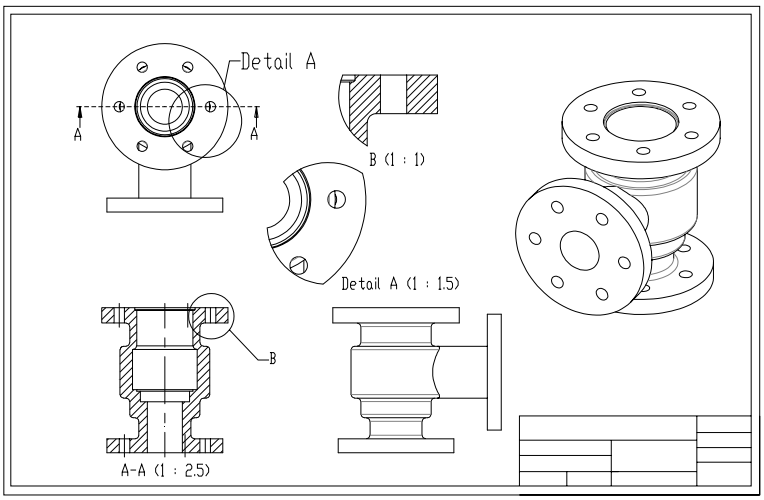

Figure 1-26 *Drawing views of the body part*

Evaluation Copy. Do not reproduce. For information visit www.cadcim.com

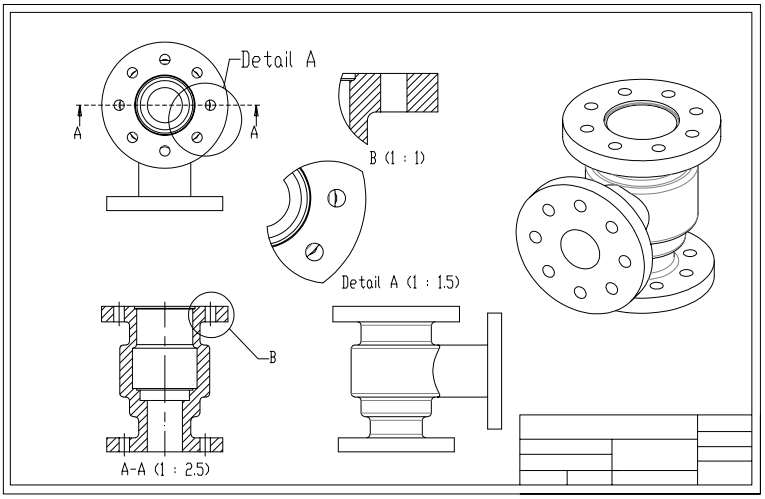

Figure 1-27 *Drawing views after modifications*

Windows Functionality

SOLIDWORKS is a Windows-based 3D CAD package. It uses Window's graphical user interface and the functionalities such as drag and drop, copy paste, and so on. For example, consider that you have created a hole feature on the front planar surface of a model. Now, to create another hole feature on the top planar surface of the same model, select the hole feature and press Ctrl+C (copy) on the keyboard. Next, select the top planar surface of the base feature and press Ctrl+V (paste); the copied hole feature will be pasted on the selected face. You can also drag and drop the standard features from the **Design Library** task pane to the face of the model on which the feature is to be added.

SWIFT Technology

SWIFT is the acronym for SOLIDWORKS Intelligent Feature Technology. This technology makes SOLIDWORKS more user-friendly. This technology helps the user think more about the design rather than the tools in the software. Therefore, even the novice users find it very easy to use SOLIDWORKS for their design. The tools that use SWIFT Technology are called as *Xperts*. The different *Xperts* in SOLIDWORKS are **SketchXpert**, **FeatureXpert**, **DimXpert**, **AssemblyXpert**, **FilletXpert**, **DraftXpert**, and **MateXpert**. The **SketchXpert** in the sketching environment is used to resolve the conflicts that arise while applying relations to a sketch. Similarly, the **FeatureXpert** in the Part mode is used when the fillet and draft features fail. You will learn about these tools in the later chapters.

Geometric Relations

Geometric relations are the logical operations that are performed to add a relationship (like tangent or perpendicular) between the sketched entities, planes, axes, edges, or vertices. When adding relations, one entity can be a sketched entity and the other entity can be a sketched entity, or an edge, face, vertex, origin, plane, and so on. There are two methods to create the geometric relations: Automatic Relations and Add Relations.

Evaluation Copy. Do not reproduce. For information visit www.cadcim.com

Automatic Relations

The sketching environment of SOLIDWORKS has been provided with the facility of applying auto relations. This facility ensures that the geometric relations are applied to the sketch automatically while creating it. Automatic relations are also applied in the **Drawing** mode while working with interactive drafting.

Add Relations

Add relations is used to add geometric relations manually to the sketch. The sixteen types of geometric relations that can be manually applied to the sketch are as follows:

Horizontal

This relation forces the selected line segment to become a horizontal line. You can also select two points and force them to be aligned horizontally.

Vertical

This relation forces the selected line segment to become a vertical line. You can also select two points and force them to be aligned vertically.

Collinear

This relation forces the two selected entities to be placed in the same line.

Coradial

This relation is applied to any two selected arcs, two circles, or an arc and a circle to force them to become equi-radius and also to share the same center point.

Perpendicular

This relation is used to make selected line segment perpendicular to another selected segment.

Parallel

This relation is used to make the selected line segment parallel to another selected segment.

Tangent

This relation is used to make the selected line segment, arc, spline, circle, or ellipse tangent to another arc, circle, spline, or ellipse.



Note

In case of splines, relations are applied to their control points.

Concentric

This relation forces two selected arcs, circles, a point and an arc, a point and a circle, or an arc and a circle to share the same center point.

Midpoint

This relation forces a selected point to be placed on the mid point of a selected line.

Intersection

This relation forces a selected point to be placed at the intersection of two selected entities.

Evaluation Copy. Do not reproduce. For information visit www.cadcim.com

Coincident
This relation is used to make two points, a point and a line, or a point and an arc coincident.

Equal
The equal relation forces the two selected lines to become equal in length. This relation is also used to force two arcs, two circles, or an arc and a circle to have equal radii.

Symmetric
The symmetric relation is used to force the selected entities to become symmetrical about a selected center line, so that they remain equidistant from the center line.

Fix
This relation is used to fix the selected entity to a particular location with respect to the coordinate system. The endpoints of the fixed line, arc, spline, or elliptical segment are free to move along the line.

Pierce
This relation forces the sketched point to be coincident to the selected axis, edge, or curve where it pierces the sketch plane. The sketched point in this relation can be the end point of the sketched entity.

Merge
This relation is used to merge two sketched points or end points of entities.

Blocks

A block is a set of entities grouped together to act as a single entity. Blocks are used to create complex mechanisms as sketches and check their functioning before developing them into complex 3D models.

Library Feature

Generally, in a mechanical design, some features are used frequently. In most of the other solid modeling tools, you need to create these features whenever you need them. However, SOLIDWORKS allows you to save these features in a library so that you can retrieve them whenever you want. This saves a lot of designing time and effort of a designer.

Design Table

Design tables are used to create a multi-instance parametric component. For example, some components in your organization may have the same geometry but different dimensions. Instead of creating each component of the same geometry with a different size, you can create one component and then using the design table, create different instances of the component by changing the dimension as per your requirement. You can access all these components in a single part file.

Equations

Equations are the analytical and numerical formulae applied to the dimensions during the sketching of the feature sketch or after sketching the feature sketch. The equations can also be applied to the placed features.

Evaluation Copy. Do not reproduce. For information visit www.cadcim.com

Collision Detection

Collision detection is used to detect interference and collision between the parts of an assembly when the assembly is in motion. While creating the assembly in SOLIDWORKS, you can detect collision between parts by moving and rotating them.

What's Wrong Functionality

While creating a feature of the model or after editing a feature, if the geometry of the feature is not compatible and the system is not able to construct that feature, then the **What's Wrong** functionality is used to detect the possible error that may have occurred while creating the feature.

SimulationXpress

In SOLIDWORKS, you are provided with an analysis tool named as SimulationXpress, which is used to execute the static or stress analysis. In SimulationXpress, you can only execute the linear static analysis. Using the linear static analysis, you can calculate the displacement, strain, and stresses applied on a component with the effect of material, various loading conditions, and restraint conditions applied on a model. A component fails when the stress applied on it reaches beyond a certain permissible limit. The Static Nodal stress plot of the crane hook designed in SOLIDWORKS and analyzed using SimulationXpress is shown in Figure 1-28.

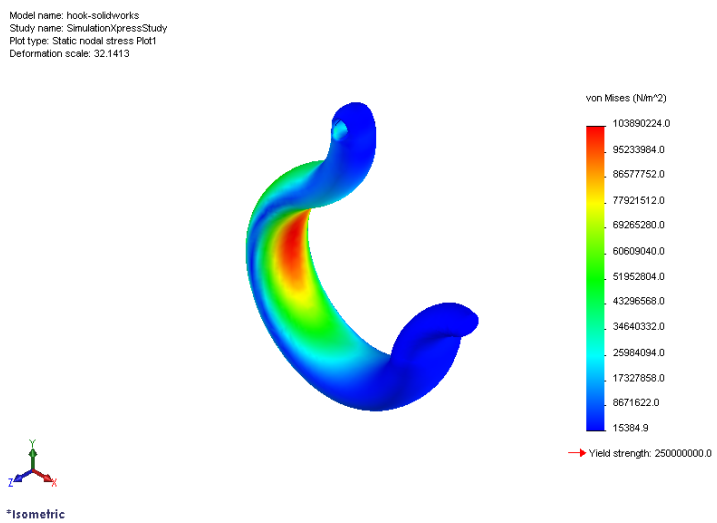

Figure 1-28 *The crane hook analyzed using SimulationXpress*

Physical Dynamics

The Physical Dynamics is used to observe the motion of the assembly. With this option selected, the component dragged in the assembly applies a force to the component that it touches. As a result, the other component moves or rotates within its allowable degrees of freedom.

Evaluation Copy. Do not reproduce. For information visit www.cadcim.com

Physical Simulation

The Physical Simulation is used to simulate the assemblies created in the assembly environment of SOLIDWORKS. You can assign and simulate the effect of different simulation elements such as linear, rotary motors, and gravity to the assemblies. After creating a simulating assembly, you can record and replay the simulation.

Seed Feature

The original feature that is used as the parent feature to create any type of pattern or mirror feature is known as the seed feature. You can edit or modify only a seed feature. You cannot edit the instances of the pattern feature.

FeatureManager Design Tree

The **FeatureManager Design Tree** is one the most important components of SOLIDWORKS screen. It contains information about default planes, materials, lights, and all the features that are added to the model. When you add features to the model using various modeling tools, the same are also displayed in the **FeatureManager Design Tree**. You can easily select and edit the features using the **FeatureManager Design Tree**. When you invoke any tool to create a feature, the **FeatureManager Design Tree** is replaced by the respective PropertyManager. At this stage, the **FeatureManager Design Tree** is displayed in the drawing area.

Absorbed Features

Features that are directly involved in creating other features are known as absorbed features. For example, the sketch of an extruded feature is an absorbed feature of the extruded feature.

Child Features

The features that are dependent on their parent feature and cannot exist without their parent features are known as child features. For example, consider a model with extrude feature and filleted edges. If you delete the extrude feature, the fillet feature will also get deleted because its existence is not possible without its parent feature.

Dependent Features

Dependent features are those features that depend on their parent feature but can still exist without the parent feature with some minor modifications. If the parent feature is deleted, then by specifying other references and modifying the feature, you can retain the dependent features.

AUTO-BACKUP OPTION

SOLIDWORKS also allows you to set the option to save the SOLIDWORKS document automatically after a regular interval of time. While working on a design project, if the system crashes, you may lose the unsaved design data. If the auto-backup option is turned on, your data will be saved automatically after regular intervals. To turn this option on, choose **Tools > Options** from the SOLIDWORKS menus; the **System Options - General** dialog box will be displayed. Select the **Backup/Recover** option from the display area provided on the left of this dialog box. Next, choose the **Save auto-recover information every** check box in the **Auto-recover** area, if it is not chosen by default. On doing so, the spinner and the drop-down list provided on the right of the check box will be enabled. Use the spinner and the drop-down list to set

Evaluation Copy. Do not reproduce. For information visit www.cadcim.com

the number of changes or minutes after which the document will be saved automatically. By default, the backup files are saved at the location *X:\Users\<name of your machine>AppData\Local\Temp\SWBackupDirectory\swxauto2025* (where *X* is the drive in which you have installed SOLIDWORKS 2025 and the *AppData* folder is a hidden folder). You can also change the path of this location. To change this path, choose the button provided on the right of the edit box; the **Select Folder** dialog box will be displayed. You can specify the location of the folder to save the backup files using this dialog box. If you need to save the backup files in the current folder, select the **Number of backup copies per document** check box and then select the **Save backup files in the same location as the original** radio button. You can set the number of backup files that you need to save using the **Number of backup copies per document** spinner. After setting all options, choose the **OK** button from the **System Options - Backup/Recover** dialog box.

SELECTING HIDDEN ENTITIES

Sometimes, while working on a model, you need to select an entity that is either hidden behind another entity or is not displayed in the current orientation of the view. SOLIDWORKS allows you to select these entities using the **Select Other** option. For example, consider that you need to select the back face of a model, which is not displayed in the current orientation. In such a case, you need to move the cursor over the visible face such that the cursor is also in line with the back face of the model. Now, click on the front face and choose the **Select Other** button from the pop-up toolbar; the cursor changes to the select other cursor and the **Select Other** list box will be displayed. This list box displays all entities that can be selected. The item on which you move the cursor in the list box will be highlighted in the drawing area. You can select the hidden face using this box.

HOT KEYS

SOLIDWORKS is more popularly known for its mouse gesture functionality. However, you can also use the keys of the keyboard to invoke some tools, windows, dialog boxes, and so on. These keys are known as hot keys. Some hot keys along with their functions are given next.

Hot Key	Function
F11	Full screen
S	Invokes the shortcut bar
R	Invokes the recent documents
F	Fits the object in the drawing over the screen
Z	Zooms out
Space Bar	Invokes the **Orientation** menu
Ctrl+1	Changes the current view to the Front View
Ctrl+2	Changes the current view to the Back View

Evaluation Copy. Do not reproduce. For information visit www.cadcim.com

Ctrl+3	Changes the current view to the Left View
Ctrl+4	Changes the current view to the Right View
Ctrl+5	Changes the current view to the Top View
Ctrl+6	Changes the current view to the Bottom View
Ctrl+7	Changes the current view to the Isometric View
Ctrl+8	Changes the current view to the Normal View
Ctrl+Shift+Z	Changes the current view to the Previous View
Ctrl+Arrows	Moves the feature along the arrows direction
Ctrl+B	Rebuilds the model
Ctrl+Z	Invokes the **Undo** tool
Ctrl+N	Invokes the **New SOLIDWORKS Document** dialog box
Ctrl+O	Invokes the **Open** window
Ctrl+S	Saves the document
Ctrl+P	Prints the document
Ctrl+A	Selects all the parts in the document
Ctrl+C	Copies the selected feature
Ctrl+V	Pastes the selected feature
Ctrl+X	Cuts the selected feature
Alt+F	Opens the **File** menu
Alt+E	Opens the **Edit** menu
Alt+V	Opens the **View** menu
Alt+I	Opens the **Insert** menu
Alt+T	Opens the **Tool** menu
Alt+W	Opens the **Window** menu

Evaluation Copy. Do not reproduce. For information visit www.cadcim.com

Alt+H	Opens the **Help** menu
Ctrl+W	Closes the current document

COLOR SCHEME

SOLIDWORKS allows you to use various color schemes as the background color of the screen, color and display style of **FeatureManager Design Tree**, and for displaying the entities on the screen. Note that the color scheme used in this book is neither the default color scheme nor the predefined color scheme. To set the color scheme, choose **Tools > Options** from the SOLIDWORKS menus; the **System Options - General** dialog box will be displayed. Select the **Colors** option from the left of this dialog box; the option related to the color scheme will be displayed in the dialog box and the name of the dialog box will change to **System Options - Colors**. In the list box available in the **Color scheme settings** area, the **Viewport Background** option is available. Select this option and choose the **Edit** button from the preview area on the right. Select white color from the **Color** dialog box and choose the **OK** button. After setting the color scheme, you need to save it so that next time if you need to set this color scheme, you do not need to configure all the settings. You just need to select the name of the saved color scheme from the **Current color scheme** drop-down list. To save the color scheme, choose the **Save As Scheme** button; the **Color Scheme Name** dialog box will be displayed. Enter the name of the color scheme as **SOLIDWORKS 2025** in the edit box in the **Color Scheme Name** dialog box and choose the **OK** button. Now, choose the **OK** button from the **System Options - Colors** dialog box.

Self-Evaluation Test

Answer the following questions and then compare them to those given at the end of this chapter:

1. The _____ property ensures that any modification made in a model in any of the modes of SOLIDWORKS is also reflected in the other modes immediately.

2. The _____ relation forces two selected arcs, two circles, a point and an arc, a point and a circle, or an arc and a circle share the same centerpoint.

3. The _____ relation is used to make two points, a point and a line, or a point and an arc coincident.

4. The _____ relation forces two selected lines to become equal in length.

5. The _____ is used to detect interference and collision between the parts of an assembly when the assembly is in motion.

Evaluation Copy. Do not reproduce. For information visit www.cadcim.com

Review Questions

Answer the following questions:

1. _____ are the analytical and numerical formulae applied to the dimensions during or after sketching of the feature sketch.

2. The **Part** mode of SOLIDWORKS is a feature-based parametric environment in which you can create solid models. (T/F)

3. Generative drafting is the process of generating drawing views of a part or an assembly created earlier. (T/F)

4. The tip of the day is displayed at the bottom of the task pane. (T/F)

5. In SOLIDWORKS, solid models are created by integrating a number of building blocks called features. (T/F)

Evaluation Copy. Do not reproduce. For information visit www.cadcim.com

Answers to Self-Evaluation Test

1. Bidirectional associativity, **2.** concentric, **3.** coincident, **4.** equal, **5.** collision detection