Table of Contents

Dedication iii
Preface xvii

Chapter 1: Introduction to Creo Parametric 12.4

Introduction to Creo Parametric 12.4 1-2
Features of Creo Parametric 1-2
    Feature-Based Nature 1-2
    Bidirectional Associative Property 1-3
    Parametric Nature 1-6
System Requirements 1-6
Getting Started with Creo Parametric 1-6
Important Terms and Definitions 1-9
File Menu Options 1-9
Managing Files 1-21
Menu Manager 1-21
Model Tree 1-22
Understanding the Functions of the Mouse Buttons 1-22
Ribbon 1-23
Toolbars 1-24
    Graphics Toolbar New 1-25
Navigator 1-30
Creo Parametric Browser 1-30
Appearance Gallery 1-31
Rendering in Creo Parametric 1-34
Color Scheme Used in this Book 1-35
Self-Evaluation Test 1-37

Chapter 2: Creating Sketches in the Sketch Mode-I

The Sketch Mode 2-2
    Working with the Sketch Mode 2-2
    Invoking the Sketch Mode 2-2
The Sketcher Environment 2-3
Working with a Sketch in the Sketch Mode 2-4
Drawing a Sketch Using the tools available in the Sketch Tab 2-4
    Creating a Point 2-4
    Drawing Lines 2-5
    Drawing a Centerline 2-6
    Drawing a Geometry Centerline 2-7
    Drawing a Rectangle 2-7
    Drawing a Circle 2-9
    Drawing an Ellipse 2-11

Evaluation Copy. Do not reproduce. For information visit www.cadcim.com

Drawing an Arc 2-11
Drawing Construction Geometries 2-14
Dimensioning the Sketch 2-15
Converting a Weak Dimension into a Strong Dimension 2-15
Dimensioning a Sketch Using the Dimension Tool 2-16
Dimensioning the Sketched Entities 2-15
Working With Constraints 2-19
Types of Constraints 2-19
Disabling the Constraints 2-21
Modifying the Dimensions of a Sketch 2-21
Using the Modify Tool 2-21
Modifying a Dimension by Double-Clicking 2-22
Modifying Dimensions Dynamically 2-22
Locking Dimensions and Entities 2-23
Resolve Sketch Dialog Box 2-23
Deleting the Sketched Entities 2-24
Trimming the Sketched Entities 2-24
Mirroring the Sketched Entities 2-26
Inserting Standard/User-Defined Sketches 2-26
Drawing Display Options 2-27
Tutorial 1 2-29
Tutorial 2 2-36
Tutorial 3 2-40
Self-Evaluation Test 2-45
Review Questions 2-46
Exercise 1 2-46
Exercise 2 2-47
Exercise 3 2-47
Exercise 4 2-48
Exercise 5 2-48
Exercise 6 2-49

Chapter 3: Creating Sketches in the Sketch Mode-II

Dimensioning the Sketch 3-2
Dimensioning a Sketch Using the Baseline Tool 3-2
Replacing the Dimensions of a Sketch Using the Replace Tool 3-3
Creating Fillets 3-3
Creating Circular Fillets 3-3
Creating Elliptical Fillets 3-5
Creating a Reference Coordinate System 3-6
Working with Splines 3-7
Creating a Spline 3-7
Dimensioning of Splines 3-7
Modifying a Spline 3-9
Writing Text in the Sketcher Environment 3-10
Offsetting Sketched Entities 3-12
Thickening Sketched Entities 3-15

Evaluation Copy. Do not reproduce. For information visit www.cadcim.com

Rotating and Resizing Entities 3-16
Sketch Diagnostic Tools 3-18
Feature Requirements 3-18
Highlight Overlaps 3-18
Highlight Intersections 3-18
Highlight Junctions 3-19
Highlight Open Ends 3-19
Shade Closed Loops 3-19
Importing 2D Drawings in the Sketch Mode 3-20
Tutorial 1 3-21
Tutorial 2 3-26
Tutorial 3 3-31
Self-Evaluation Test 3-36
Review Questions 3-36
Exercise 1 3-37
Exercise 2 3-38
Exercise 3 3-39

Chapter 4: Creating Base Features

Concept of Sketch Based Features 4-2
Creating Base Features 4-2
Invoking the Part Mode 4-2
Changing the Units of the Part Mode 4-4
Creating a Custom System of Units 4-5
The Default Datum Planes 4-6
Creating a Protrusion 4-6
Extruding a Sketch 4-7
Revolving a Sketch 4-19
Understanding the Orientation of Datum Planes 4-21
Changing the Orientation of the Model 4-26
Parent-Child Relationship 4-28
Implicit Relationship 4-28
Explicit Relationship 4-28
Sketch Region 4-28
Nesting of Sketches 4-29
Creating Cuts 4-30
Removing Material by Using the Extrude Tool 4-30
Removing Material by Using the Revolve Tool 4-31
Tutorial 1 4-32
Tutorial 2 4-39
Tutorial 3 4-45
Tutorial 4 4-49
Tutorial 5 4-55
Self-Evaluation Test 4-62
Review Questions 4-63
Exercise 1 4-64
Exercise 2 4-65

Evaluation Copy. Do not reproduce. For information visit www.cadcim.com

Exercise 3 4-65
Exercise 4 4-66
Exercise 5 4-66

Chapter 5: Datums

Datums 5-2
Need for Datums in Modeling 5-2
Selection Method in Creo Parametric 5-3
Default Datum Planes 5-5
Datum Options 5-6
Datum Planes 5-7
Creating Datum Planes 5-9
Offset Planes 5-15
Datum Axes 5-16
Datum Points 5-21
Datum Coordinate System 5-30
Datum Curves 5-35
Curve from Cross Section 5-42
Asynchronous Datum features 5-43
Tutorial 1 5-44
Tutorial 2 5-55
Tutorial 3 5-64
Self-Evaluation Test 5-71
Review Questions 5-72
Exercise 1 5-73
Exercise 2 5-74
Exercise 3 5-75
Exercise 4 5-76

Chapter 6: Options Aiding Construction of Parts-I

Options Aiding Construction of Parts 6-2
Creating Holes 6-2
The Hole Dashboard 6-2
Important Points to Remember While Creating a Hole 6-16
Creating Rounds 6-17
Creating Basic Rounds 6-18
Creating a Variable Radius Round 6-28
Points to Remember While Creating Rounds 6-35
Creating Auto Rounds 6-35
Creating Rounds Using Intent Edges 6-37
Creating Chamfers 6-38
Corner Chamfer 6-39
Edge Chamfer 6-39
Understanding Ribs 6-43
Creating Trajectory Ribs 6-43

Evaluation Copy. Do not reproduce. For information visit www.cadcim.com

Creating Profile Ribs 6-45
Editing Features of a Model 6-47
Editing Definition or Redefining Features 6-47
Reordering Features 6-48
Rerouting Features 6-49
Suppressing Features 6-51
Deleting Features 6-52
Modifying Features 6-52
Tutorial 1 6-53
Tutorial 2 6-63
Tutorial 3 6-68
Tutorial 4 6-73
Self-Evaluation Test 6-81
Review Questions 6-82
Exercise 1 6-83
Exercise 2 6-83

Chapter 7: Options Aiding Construction of Parts-II

Options Aiding Construction of Parts 7-2
Creating Shell Features 7-2
Creating Draft Features 7-5
Creating Toroidal Bends 7-14
Creating Spinal Bends 7-17
Creating Cosmetic Sketches 7-21
Creating Cosmetic Threads 7-22
Creating Cosmetic Grooves 7-23
Creating Warps 7-24
Tutorial 1 7-39
Tutorial 2 7-42
Tutorial 3 7-46
Tutorial 4 7-50
Self-Evaluation Test 7-58
Review Questions 7-58
Exercise 1 7-59
Exercise 2 7-60

Chapter 8: Options Aiding Construction of Parts-III

Introduction 8-2
Creating a Feature Pattern 8-2
Uses of a Pattern 8-2
Creating a Pattern 8-2
Creating a Geometry Pattern 8-18
Deleting a Pattern 8-20
Copying and Pasting Features 8-20
Mirroring a Geometry 8-24

Evaluation Copy. Do not reproduce. For information visit www.cadcim.com

User-Defined Features (UDF) 8-25
Subordinate UDFs 8-25
Standalone UDFs 8-26
Creating UDF 8-26
Placing UDF 8-28
Layers 8-30
Creating and Managing Layers 8-30
Creating Layer States 8-32
Tutorial 1 8-32
Tutorial 2 8-38
Tutorial 3 8-48
Tutorial 4 8-51
Tutorial 5 8-58
Self-Evaluation Test 8-71
Review Questions 8-71
Exercise 1 8-72
Exercise 2 8-73
Exercise 3 8-74
Exercise 4 8-75

Chapter 9: Advanced Modeling Tools

Advanced Modeling Tools 9-2
Sweep Features 9-2
Sweep 9-2
Helical Sweep 9-20
Volume Helical Sweep 9-25
Blend Features 9-28
Blend 9-28
Swept Blend 9-33
Rotational Blend 9-37
Tutorial 1 9-38
Tutorial 2 9-44
Tutorial 3 9-50
Tutorial 4 9-52
Tutorial 5 9-63
Tutorial 6 9-68
Self-Evaluation Test 9-73
Review Questions 9-73
Exercise 1 9-74
Exercise 2 9-76
Exercise 3 9-78
Exercise 4 9-81

Chapter 10: Assembly Modeling

Assembly Modeling 10-2
Important Terms Related to the Assembly Mode 10-2

Evaluation Copy. Do not reproduce. For information visit www.cadcim.com

Top-down Approach 10-2
Bottom-up Approach 10-3
Placement Constraints 10-3
Package 10-4
Creating Top-Down Assemblies 10-4
Creating Components in the Assembly Mode 10-4
Creating Bottom-up Assemblies 10-5
Inserting Components in an Assembly 10-5
Assembling Components 10-6
Displaying Components in a Separate Window 10-6
Displaying Components in the Same Window 10-6
3D Dragger 10-7
Applying Constraints 10-7
Status Area 10-12
Placement Tab 10-12
Move Tab 10-13
Options Tab Enhanced 10-14
Flexibility Tab 10-14
Properties Tab 10-14
Packaging Components Enhanced 10-15
Simplified Representations 10-17
Types of Simplified Representations 10-17
Creating Simplified Representations 10-19
Other Usages of the View Manager Dialog Box 10-22
Creating a Display Style 10-22
Setting the Orientation of an Assembly 10-23
Creating Sections of an Assembly 10-23
Redefining the Components of an Assembly 10-26
Reordering Components 10-26
Suppressing/Resuming Components 10-27
Replacing Components 10-28
Assembling Repeated Copies of a Component 10-28
Mirroring Components Inside an Assembly 10-29
Modifying the Components of an Assembly 10-30
Modifying Dimensions of a Feature of a Component 10-31
Redefining a Feature of a Component 10-31
Adding Flexibility to a Component 10-32
Creating the Exploded State 10-32
The Bill of Materials 10-33
Global Interference 10-40
Pairs Clearance 10-40
Shrinkwrap Features 10-40
Tutorial 1 10-43
Tutorial 2 10-59
Self-Evaluation Test 10-67
Review Questions 10-68
Exercise 1 10-69

Evaluation Copy. Do not reproduce. For information visit www.cadcim.com

Chapter 11: Generating, Editing, and Modifying the Drawing Views

The Drawing Mode 11-2
Generating Drawing Views 11-5
- Generating the General View 11-5
- Generating the Projection View 11-7
- Generating the Detailed View 11-7
- Generating the Auxiliary View 11-8
- Generating the Revolved Section View 11-9
- Generating the Copy and Align View 11-19
- Generating the 3D Cross-Section View 11-20

Editing the Drawing Views 11-23
- Moving the Drawing View 11-23
- Erasing the Drawing View 11-23
- Deleting the Drawing View 11-23
- Adding New Parts or Assemblies to the Current Drawing 11-24

Modifying the Drawing Views 11-24
- Changing the View Type 11-24
- Changing the View Scale 11-25
- Reorienting the Views 11-25
- Modifying the Cross-sections 11-25
- Modifying Boundaries of Views 11-25
- Adding or Removing the Cross-section Arrows 11-26
- Modifying the Perspective Views 11-26

Modifying Other Parameters 11-26
- Editing the Cross-section Hatching 11-26

Tutorial 1 11-27
Tutorial 2 11-35
Self-Evaluation Test 11-42
Review Questions 11-43
Exercise 1 11-44

Chapter 12: Dimensioning the Drawing Views

Dimensioning the Drawing Views 12-2
- Show Model Annotations Dialog Box 12-2
- Dimension 12-4
- Surface Finish 12-5
- Reference Dimension 12-5
- Jog 12-5

Mini Toolbar 12-5
Adding Notes to the Drawing 12-5
Adding Tolerances to the Drawing Views 12-6
- Dimensional Tolerances 12-6
- Geometric Tolerances 12-7

Editing the Geometric Tolerances 12-9
Adding Balloons to the Assembly Views 12-10
Adding Datum Features Symbols to the Drawing Views 12-10

Evaluation Copy. Do not reproduce. For information visit www.cadcim.com

Modifying and Editing Dimensions 12-12
Modifying the Dimensions Using the Dimension Dashboard 12-12
Cleaning Up the Dimensions 12-14
Tutorial 1 12-17
Tutorial 2 12-23
Self-Evaluation Test 12-28
Review Questions 12-29
Exercise 1 12-30

Chapter 13: Other Drawing Options

Sketching in the Drawing Mode 13-2
Modifying the Sketched Entities 13-5
User-Defined Drawing Formats 13-10
Retrieving the User-Defined Formats in the Drawings 13-12
Adding and Removing Sheets in the Drawing 13-12
Creating Tables in the Drawing Mode 13-12
Generating the BOM and Balloons in Drawings 13-15
Tutorial 1 13-18
Tutorial 2 13-29
Self-Evaluation Test 13-39
Review Questions 13-40
Exercise 1 13-41

CHAPTERS AVAILABLE FOR FREE DOWNLOAD

In this textbook, four chapters have been given for free download. You can download these chapters from our website *www.cadcim.com*. To download these chapters, click *Textbooks > CAD/CAM > PTC Creo Parametric > Creo Parametric 12.4 for Designers > Chapters for Free Download* and then click on the chapter name that you want to download.

Chapter 14: Working with Sheetmetal Components

Introduction to Sheetmetal 14-2
Invoking the Sheetmetal Mode 14-2
Introduction to Sheetmetal Walls 14-3
Primary Walls 14-3
Secondary Walls 14-3
Creating the Planar Wall 14-3
Creating the Unattached Revolve Wall 14-4
Creating the Unattached Blend Wall 14-6
Creating the Unattached Rotational Blend Wall 14-8
Creating the Unattached Offset Wall 14-9
Creating a Flat Wall 14-10
Creating a Twist Wall 14-15
Creating an Extend Wall 14-17
Creating a Flange Wall 14-18
Creating the Bend Feature 14-22

Evaluation Copy. Do not reproduce. For information visit www.cadcim.com

Creating the Unbend Feature 14-27
Creating the Bend Back 14-29
Conversion to Sheetmetal Part 14-30
Creating Cuts in the Sheetmetal Components 14-32
Creating the Flat Pattern 14-33
Tutorial 1 14-34
Tutorial 2 14-41
Self-Evaluation Test 14-47
Review Questions 14-47
Exercise 1 14-48
Exercise 2 14-49

Chapter 15: Surface Modeling

Surface Modeling 15-2
Creating Surfaces in Creo Parametric 15-2
Creating an Extruded Surface 15-2
Creating a Revolved Surface 15-3
Creating a Sweep Surface 15-3
Creating a Blend Surface 15-4
Creating a Rotational Blend Surface 15-4
Creating a Swept Blend Surface 15-5
Creating a Helical Sweep Surface 15-5
Creating a Surface by Blending Boundaries 15-6
Creating a Variable Section Sweep Surface by Using the Sweep Tool 15-8
Creating a Curve Using the Project Tool 15-9
Creating a Curve Using the Wrap Option 15-12
Creating Surfaces By Using the Style Environment of Creo Parametric 15-13
Style Dashboard 15-14
Mini Toolbar 15-21
Surface Editing Tools 15-22
Mirroring the Surfaces 15-22
Merging the Surfaces 15-23
Trimming the Surfaces 15-24
Creating the Fill Surfaces 15-25
Creating the Intersect Curves 15-26
Creating the Offset Surfaces 15-27
Adding Thickness to a Surface 15-29
Converting a Surface into a Solid 15-30
Creating a Round at the Vertex of a Surface 15-31
Freestyle Modeling Environment 15-31
Freestyle Dashboard 15-31
Tutorial 1 15-36
Tutorial 2 15-44
Tutorial 3 15-52
Self-Evaluation Test 15-56
Review Questions 15-57
Exercise 1 15-57

Evaluation Copy. Do not reproduce. For information visit www.cadcim.com

Exercise 2 15-58
Exercise 3 15-59

Chapter 16: Introduction to Mold Design

Introduction to Mold Design 16-2
Mold Assembly 16-2
Cavity 16-2
Core 16-2
Shrinkage Factor 16-2
Parting Line 16-2
Parting Surface 16-2
Draft Angle 16-3
Runner 16-3
Mold Designing Using Creo Parametric 16-3
Tutorial 1 16-4
Tutorial 2 16-16
Self-Evaluation Test 16-28
Review Questions 16-29
Exercise 1 16-29
Exercise 2 16-30

Chapter 17: Concepts of Geometric Dimensioning and Tolerancing

History of Tolerances and Allowances 17-2
Methods of Tolerancing 17-2
Limit Dimensioning 17-3
Plus and Minus Tolerancing 17-4
Geometric Tolerances 17-4
Form Tolerances 17-10
Profile Tolerances 17-19
Orientation Tolerances 17-22
Location Tolerances 17-25
Runout Tolerances 17-29
Fits 17-33
Hole Basis System 17-33
Shaft Basis System 17-34
Standard of Fits 17-39
Standard Inch Fits 17-39
Standard Metric Fits 17-42
Tutorial 1 17-46
Self-Evaluation Test 17-52
Review Questions 17-52
Exercise 1 17-53

Evaluation Copy. Do not reproduce. For information visit www.cadcim.com

PROJECTS AVAILABLE FOR FREE DOWNLOAD

In this textbook, four projects are available for free download. You can download these projects from our website **www.cadcim.com**. To download these projects, click *Textbooks > CAD/CAM > PTC Creo Parametric > Creo Parametric 12.4 for Designers > Projects for Free Download* and then click on the project name that you want to download.

Note

For additional projects, visit *https://www.cadcim.com/cad-student-projects.aspx*

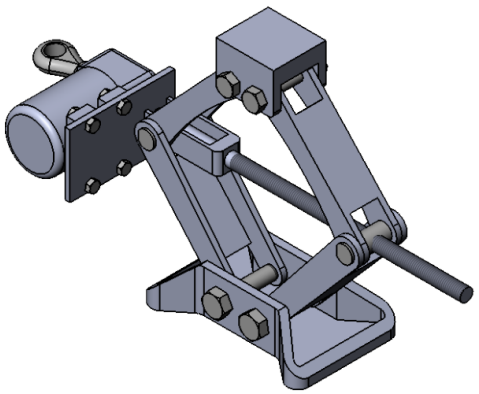

Project 1: *Car Jack Assembly*

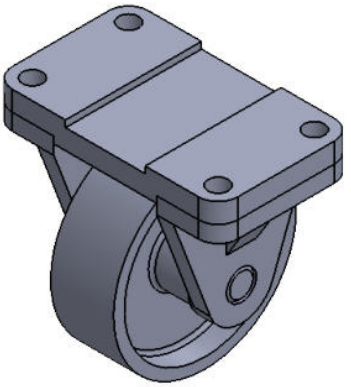

Project 2: *Wheel Assembly*

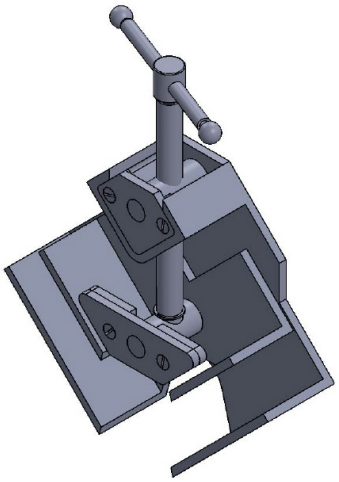

Project 3: *Angle Clamp Assembly*

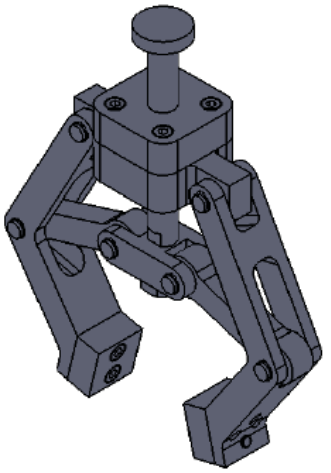

Project 4: *Pneumatic Gripper Assembly*

Evaluation Copy. Do not reproduce. For information visit www.cadcim.com

Preface

Creo Parametric 12.4

Creo Parametric is developed by Parametric Technology Corporation. It provides a broad range of powerful and flexible CAD capabilities that can address even the most tedious design challenges. Being a parametric feature-based solid modeling tool, it not only integrates the 3D parametric features with 2D tools, but also assists in every design-through-manufacturing process. This software is remarkably user-friendly.

This solid modeling software allows you to easily import the standard format files with an amazing compatibility. The 2D drawing views of the components are automatically generated in the Drawing mode. Using this software, you can generate detailed, orthographic, isometric, auxiliary, and section views. Additionally, you can use any predefined drawing standard files for generating the drawing views. You can display the model dimensions in the drawing views or add reference dimensions whenever you want. The bidirectionally associative nature of this software ensures that any modification made in the model is automatically reflected in the drawing views. Similarly, any modification made in the dimensions of the drawing views is automatically updated in the model.

The **Creo Parametric 12.4 for Designers** textbook has been written to enable the readers to use the modeling power of Creo Parametric 12.4 effectively. The latest surfacing techniques like Freestyle and Style are explained in detail in this book. The textbook also covers the Sheet-metal module with the help of relevant examples and illustrations. The mechanical engineering industry examples and tutorials are used in this textbook to ensure that the users can relate the knowledge of this book with the actual mechanical industry designs. The salient features of this textbook are as follows:

- **Tutorial Approach**

  The author has adopted the tutorial point-of-view and the learn-by-doing approach throughout the textbook. This approach guides the users through the process of creating the models in the tutorials.

- **Real-World Projects as Tutorials**

  The author has used the real-world mechanical engineering projects as tutorials in this textbook so that the readers can correlate them with the real-time models in the mechanical engineering industry.

- **Tips and Notes**

  Additional information related to various topics is provided in the form of tips and notes.

- **Learning Objectives**

  The first page of every chapter summarizes the topics that will be covered in that chapter. This helps the users to easily refer to a topic.

- **Self-Evaluation Test, Review Questions, and Exercises**
  Every chapter ends with Self-Evaluation Test so that the users can assess their knowledge of the chapter. The answers to Self-Evaluation Test are given at the end of the chapter. Also, Review Questions and Exercises are given at the end of the chapters and they can be used by the instructor as test questions and exercises.

- **Heavily Illustrated Text**
  The text in this book is heavily illustrated with the help of around 1400 line diagrams and screen capture images that support the tools section and tutorials.

Symbols Used in the Textbook



Note
The author has provided additional information to the users about the topic being discussed in the form of notes.



Tip
Special information and techniques are provided in the form of tips that helps in increasing the efficiency of the users.



New
This symbol indicates that the command or tool being discussed is new.



Enhanced
This symbol indicates that the command or tool being discussed has been enhanced in Creo Parametric 12.4.

Formatting Conventions Used in the Textbook

Please refer to the following list for the formatting conventions used in this textbook.

- Names of tools, buttons, options, groups, tabs, slide-down panels, and Ribbon are written in boldface.

  Example: The **Extrude** tool, the **OK** button, the **Editing** group, the **Sketch** tab, and so on.

- Names of dialog boxes, drop-downs, drop-down lists, dashboards, areas, edit boxes, check boxes, and radio buttons are written in boldface.

  Example: The **Revolve** dashboard, the **Chamfer** drop-down of **Engineering** group in the **Model** tab, the **Thickness** drop-down of the **Shell** dashboard, the **Extended intersect surfaces** check box in the **Options** slide-down panel of the **Draft** dashboard, and so on.

- Values entered in edit boxes are written in boldface.

  Example: Enter **5** in the **Radius** edit box.

- Names and paths of the files are written in italics.

  Example: *C:\Creo-12.4\c03*, *c03tut03.prt*, and so on.

- Different options available for invoking a tool are given in a shaded command box.

  Ribbon: Model > Datum > Sketch

Naming Conventions Used in the Textbook

Tool

If you click on an item in a toolbar or a group of the **Ribbon** and a dashboard or dialog box is invoked to create/edit an object or perform some action, then that item is termed as **tool**.

For example:
Line tool, **Normal** tool, **Extrude** tool
Fillet tool, **Draft** tool, **Delete Segment** tool

If you click on an item in a toolbar or a group of the **Ribbon** and a dialog box is invoked wherein you can set the properties to create/edit an object, then that item is also termed as **tool**, refer to Figure 1.

For example:
To Create: **Extrude** tool, **Sweep** tool, **Round** tool
To Edit: **Extend** tool, **Trim** tool

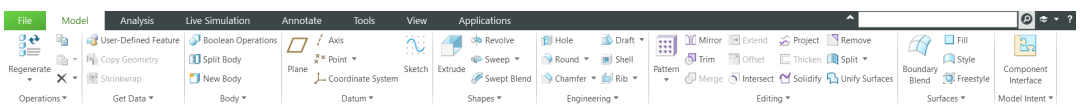

Figure 1 *Various tools in the* ***Ribbon***

Button

The item in a dialog box that has a 3D shape like a button is termed as **Button**. For example, **OK** button, **Cancel** button, **Apply** button, and so on.

Dialog Box

In this textbook, different terms are used for referring to the components of a dialog box. Refer to Figure 2 for the terminology used.

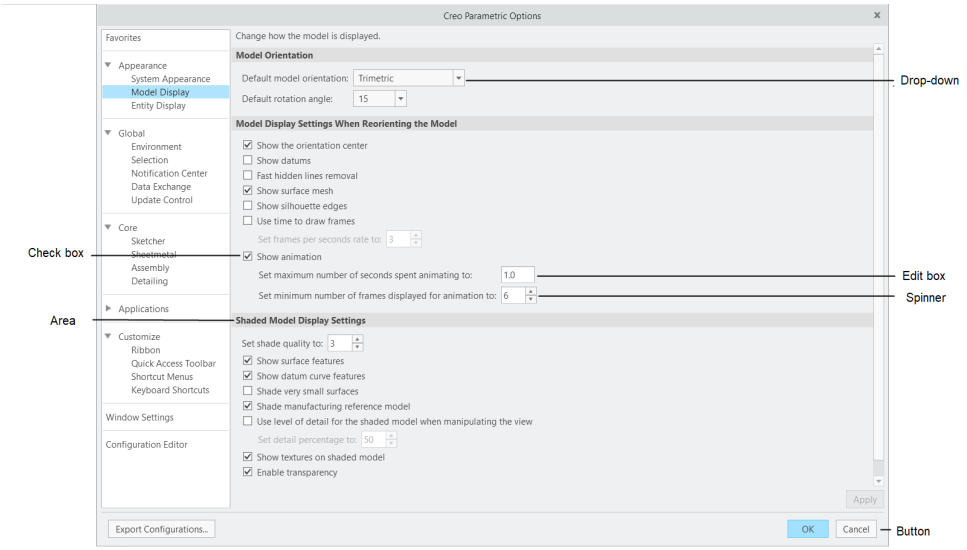

Figure 2 *The components of a dialog box*

Drop-down

A drop-down is the one in which a set of common tools are grouped together for creating an object. You can identify a drop-down with a down arrow on it. These drop-downs are given a name based on the tools grouped in them. For example, **Arc** drop-down (refer to Figure 3), **Chamfer** drop-down (refer to Figure 4), **Draft** drop-down (refer to Figure 5), and so on.

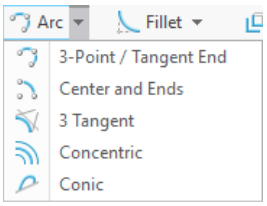

Figure 3 *The **Arc** drop-down*

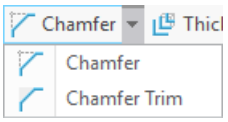

Figure 4 *The **Chamfer** drop-down*

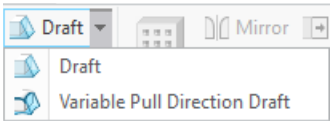

Figure 5 *The **Draft** drop-down*

Evaluation Copy. Do not reproduce. For information visit www.cadcim.com

Drop-down List

A drop-down list is the one in which a set of options are grouped together. You can set various parameters using these options. You can identify a drop-down list with a down arrow on it. For example, **Datum Display Filters** drop-down list, **Clear Appearance** drop-down list, and so on, refer to Figure 6.

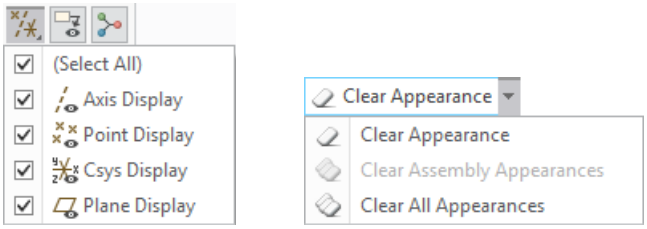

Figure 6 *The* ***Datum Display Filters*** *and* ***Clear Appearance*** *drop-down lists*

Options

Options are the items that are available in shortcut menu, drop-down list, dialog boxes, and so on. For example, choose the **Front** option from the **View Manager** dialog box, refer to Figure 7; choose the **New** option from the **File** menu, refer to Figure 8.

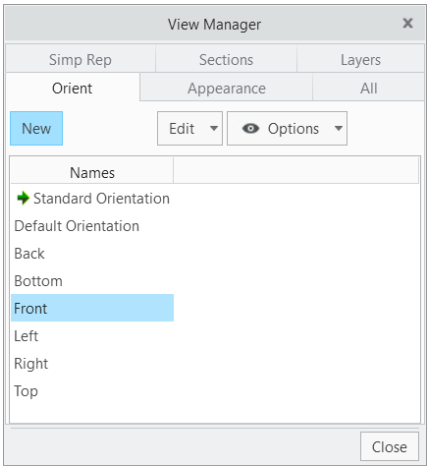

Figure 7 *The* ***Front*** *option in the* ***View Manager*** *dialog box*

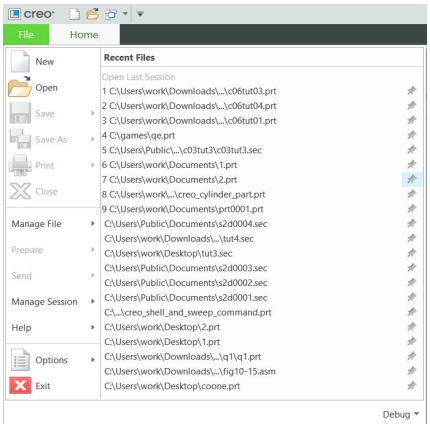

Figure 8 *The* ***New*** *option in the* ***File*** *menu*

Free Companion Website

It has been our constant endeavor to provide you the best textbooks and services at affordable price. In this endeavor, we have come out with a Free Companion website that will facilitate the process of teaching and learning of Creo Parametric 12.4. If you purchase this textbook, you will get access to the files on the Companion website.

The following resources are available for the faculty and students in this website:

Faculty Resources

- **Technical Support**
  You can get online technical support by contacting ***techsupport@cadcim.com***.

- **Instructor Guide**
  Solutions to all review questions and exercises in the textbook are provided in the Instructor guide to help the faculty members test the skills of the students.

- **Part Files**
  The part files used in illustrations, examples, and exercises are available for free download.

- **Input Files**
  The input files used in examples are available for free download.

- **Free Download Chapters**
  Chapters available for free download.

- **Free Download Projects**
  In this book, four projects are available for free download.

To access files, you need to register by visiting the **Resources** section at ***www.cadcim.com***.

Student Resources

- **Technical Support**
  You can get online technical support by contacting ***techsupport@cadcim.com***.

- **Part Files**
  The part files used in illustrations and examples are available for free download.

- **Input Files**
  The input files used in examples are available for free download.

- **Free Download Chapters**
  Chapters available for free download.

- **Free Download Projects**
  In this book, four projects are available for free download.

If you face any problem in accessing these files, please contact the publisher at ***sales@cadcim.com*** or the author at ***stickoo@pnw.edu*** or ***tickoo525@gmail.com***.

Evaluation Copy. Do not reproduce. For information visit www.cadcim.com

Video Courses

CADCIM offers video courses in CAD, CAE Simulation, BIM, Civil/GIS, and Animation domains on various e-Learning/Video platforms. To enroll for the video courses, please visit the CADCIM website using the link ***https://www.cadcim.com/video-courses***.

Video Course Companion

Every tutorial in the book(except those in the free download chapters) is available in video format, providing a visual, step by step explanation.Simply Scan the QR code to access these video tutorials.



Stay Connected

You can now stay connected with us through Facebook and Twitter to get the latest information about our textbooks, videos, and teaching/learning resources. To stay informed of such updates, follow us on Facebook *(**www.facebook.com/cadcim**)* and Twitter (***@cadcimtech***). You can also subscribe to our YouTube channel *(**www.youtube.com/cadcimtech**)* to get the information about our latest video tutorials.

This page is intentionally left blank