Table of Contents

Dedication iii
Preface xix

Chapter 1: Introduction to Solid Edge 2024

Introduction to Solid Edge 2024 1-2
Solid Edge Environments 1-5
System Requirements for Installing Solid Edge 2024 1-7
Important Terms and Definitions 1-7
Getting Started with Solid Edge 2024 1-11
User Interface of Solid Edge 1-12
- Prompt Line 1-12
- PathFinder 1-12
- Docking Window 1-13
- File Tab 1-13
- Quick Access Toolbar 1-13
- Ribbon 1-14
- Status Bar 1-14
- Record 1-14
- Upload to YouTube 1-14
- Command Bar 1-16
- QuickPick 1-16
- Part Environment Tabs 1-16
- Assembly Environment Tabs 1-17
- Draft Environment Tab 1-18
- Radial Menu 1-18

Simulation Express 1-18
Using Intellisketch 1-19
Automatic Saving Option 1-19
Color Scheme in Solid Edge 1-19
Self-Evaluation Test 1-21

Chapter 2: Sketching, Dimensioning, and Creating Base Features and Drawings

Sketching in the Part Environment 2-2
- Starting a New Part File by Using the File Tab 2-2
- Starting a New Part File by Using the New Dialog Box 2-3

Transition between Part Environments 2-6
Starting a Sketch in the Part Environment 2-6
Sketching Tools 2-7

Evaluation Copy. Do not reproduce. For information visit www.cadcim.com

Line Tool 2-8
Point Tool 2-10
Draw Tool 2-10
FreeSketch Tool 2-11
Drawing Circles 2-11
Drawing Ellipses 2-13
Drawing Arcs 2-13
Drawing Rectangles 2-14
Drawing Polygons 2-16
Drawing Curves 2-17
Clean Sketch Tool 2-17
Creating Construction Geometries 2-19
Converting Sketched Entities into Construction Geometries 2-19
Converting Sketched Entities into Curves 2-19
Filleting Sketched Entities 2-19
Chamfering Sketched Entities 2-20
The Drawing Display Tools 2-21
Zoom Area Tool 2-21
Zoom Tool 2-21
Fit Tool 2-21
Pan Tool 2-21
Sketch View Tool 2-22
Selecting Sketched Entities 2-22
Deleting Sketched Entities 2-23
Grid 2-23
Reposition Origin 2-24
Zero Origin 2-24
Dimensioning a Sketch 2-24
Creating Base Features by Extruding Sketches 2-25
Starting a New Drawing Document From The Part Document 2-25
Tutorial 1 2-26
Tutorial 2 2-30
Tutorial 3 2-35
Self-Evaluation Test 2-41
Review Questions 2-41
Exercise 1 2-43
Exercise 2 2-43
Exercise 3 2-44

Chapter 3: Adding Relationships and Dimensions to Sketches

Geometric Relationships 3-2
Connect Relationship 3-2
Concentric Relationship 3-3
Horizontal/Vertical Relationship 3-3
Collinear Relationship 3-3
Parallel Relationship 3-4
Perpendicular Relationship 3-4

Evaluation Copy. Do not reproduce. For information visit www.cadcim.com

Lock Relationship 3-4
Rigid Set Relationship 3-4
Tangent Relationship 3-5
Equal Relationship 3-5
Symmetric Relationship 3-5
Setting the Symmetry Axis (Ordered Part Environment) 3-6
Controlling the Display of Relationship Handles 3-6
Conflicts in Relationships 3-6
Deleting Relationships 3-7
Dimensioning the Sketched Entities 3-7
Adding Linear Dimensions 3-7
Adding Aligned Dimensions 3-12
Adding Angular Dimensions 3-12
Adding Diameter Dimensions 3-14
Adding Radial Dimensions 3-15
Adding Symmetric Diameter Dimensions 3-15
Adding Coordinate Dimensions 3-16
Change Coordinate Origin 3-17
Adding Angular Coordinate Dimensions 3-17
Adding Automatic Dimensions (Ordered) 3-17
Understanding the Concept of Fully Constrained Sketches 3-19
Measuring Sketched Entities 3-19
Measuring Distances 3-19
Measuring the Total Length of a Closed Loop or an Open Sketch 3-20
Measuring an Area 3-20
Calculating the Area Properties 3-21
Tutorial 1 3-22
Tutorial 2 3-27
Tutorial 3 3-31
Self-Evaluation Test 3-34
Review Questions 3-35
Exercise 1 3-36
Exercise 2 3-37
Exercise 3 3-37
Exercise 4 3-38
Exercise 5 3-38

Chapter 4: Editing, Extruding, and Revolving the Sketches

Editing the Sketches 4-2
Trimming the Sketched Entities 4-2
Trimming/Extending Entities to a Corner 4-2
Extending the Sketched Entities 4-3
Creating Splits in the Sketched Entities 4-3
Creating Offset Copies 4-3
Creating Symmetric Offset Copies 4-4
Moving/Copying the Sketched Entities 4-6
Rotating the Sketched Entities 4-6

Evaluation Copy. Do not reproduce. For information visit www.cadcim.com

Mirroring the Sketched Entities 4-7
Scaling the Sketched Entities 4-8
Stretching the Sketched Entities 4-9
Auto-Scaling the Sketched Entities 4-9
Editing the Sketched Entities by Dragging 4-9
Writing Text in the Sketch 4-10
Inserting Images into Sketches 4-11
Converting Sketches into Base Features 4-13
Creating Base Features in the Synchronous Part Environment 4-13
Creating Extruded Features 4-16
Creating Revolved Features 4-16
Creating Primitive Features (Synchronous) 4-17
Creating a Box Feature 4-17
Creating a Cylinder Feature 4-18
Creating a Sphere Feature 4-18
Creating Ordered Features 4-18
Creating Extruded Features 4-18
Creating Revolved Features 4-19
Rotating the View of a Model in 3D Space 4-19
Restoring Standard Views 4-20
Setting the Display Modes 4-21
Shaded with Visible Edges 4-21
Shaded 4-21
Visible and Hidden Edges 4-21
Visible Edges 4-21
Wire Frame 4-21
Floor Reflection 4-22
Floor Shadow 4-22
High-Quality Rendering 4-22
Improving the Display Quality of a Model 4-22
Tutorial 1 4-22
Tutorial 2 4-26
Tutorial 3 4-29
Self-Evaluation Test 4-30
Review Questions 4-31
Exercise 1 4-32
Exercise 2 4-33
Exercise 3 4-33
Exercise 4 4-34

Chapter 5: Working with Additional Reference Geometries

Additional Sketching and Reference Planes 5-2
Local Reference Planes 5-3
Global Reference Planes 5-3
Creating Reference Planes (Synchronous) 5-3
Creating a Coincident Plane 5-3
Modifying Planes Using the Steering Wheel 5-4

Evaluation Copy. Do not reproduce. For information visit www.cadcim.com

Creating a Plane Normal to an Edge or a Sketched Curve 5-5
Creating a Plane Using 3 Points 5-5
Creating a Tangent Plane 5-6
Creating Reference Planes (Ordered) 5-6
Creating a Parallel Plane 5-7
Creating an Angled Plane 5-7
Creating a Perpendicular Plane 5-8
Creating a Plane Using Coincident by Axis 5-9
Displaying the Reference Axes (Ordered) 5-9
Understanding Coordinate Systems 5-9
Creating a Coordinate System 5-10
Additional Options of the Extrude Tool 5-12
Creating Cutout Features 5-16
Creating Extruded Cutouts (Ordered) 5-16
Creating Revolved Cutouts (Ordered) 5-18
Creating Cutouts (Synchronous) 5-20
Using the Edges of Existing Features 5-20
Advanced Drawing Display Tools 5-22
Creating User-defined Named Views 5-22
Using Common Views 5-23
Tutorial 1 5-23
Tutorial 2 5-29
Tutorial 3 5-33
Self-Evaluation Test 5-38
Review Questions 5-38
Exercise 1 5-39
Exercise 2 5-40
Exercise 3 5-41

Chapter 6: Advanced Modeling Tools-I

Advanced Modeling Tools 6-2
Creating Holes (Ordered) 6-2
Creating Holes (Synchronous) 6-10
Creating Rounds (Ordered) 6-12
Creating the Constant Radius Round 6-13
Creating the Variable Radius Round 6-17
Creating Rounds (Synchronous) 6-18
Creating Variable Radius Rounds (Synchronous) 6-18
Creating Chamfers (Ordered) 6-19
Creating Patterns (Ordered) 6-20
Creating Rectangular Patterns 6-21
Creating Circular Patterns 6-25
Creating a Pattern along a Curve 6-28
Creating a Pattern by a Table 6-31
Creating Patterns (Synchronous) 6-33
Creating Rectangular Patterns 6-33
Creating Circular Patterns 6-35

Enhanced

Evaluation Copy. Do not reproduce. For information visit www.cadcim.com

Creating a Pattern along a Curve 6-35
Creating a Fill Pattern 6-36
Recognizing Hole Patterns (Synchronous) 6-40
Recognizing Patterns (Synchronous) 6-41
Mirroring Features and Bodies (Ordered) 6-42
Mirroring Selected Features 6-42
Mirroring Bodies 6-43
Tutorial 1 6-44
Tutorial 2 6-49
Tutorial 3 6-53
Self-Evaluation Test 6-60
Review Questions 6-60
Exercise 1 6-62
Exercise 2 6-63
Exercise 3 6-64
Exercise 4 6-65

Chapter 7: Editing Features

Editing Models in the Synchronous Part Environment 7-2
Adding Dimensions to the Model 7-2
Dimensioning a Feature 7-2
Dimensioning Holes 7-2
Editing the Round Feature (Synchronous) 7-3
Adding Relations Enhanced 7-3
Aligning Faces 7-4
Design Intent 7-7
Applying Concentric Relationship 7-8
Applying Tangent Relationship 7-9
Applying Symmetric Relationship 7-9
Applying Parallel Relationship 7-10
Applying Perpendicular Relationship 7-10
Applying Offset Relationship 7-11
Applying Equal Radius Relationship 7-11
Applying Horizontal/Vertical Relationship 7-12
Applying Aligned Holes Relationship 7-12
Applying Rigid Relationship 7-13
Applying Ground Relationship 7-13
Other Selection Handles 7-13
Reference Plane Handle 7-14
Selection Manager 7-14
Modifying Faces Using the Steering Wheel 7-15
Modifying the Model by Editing Dimensions 7-16
Creating Live Sections 7-17
Modifying the Model by Detaching and Attaching Faces or Features 7-17
Modifying the Model by Isolating Features 7-18
Editing Features in the Ordered Part Environment 7-19
Suppressing Features 7-20

Evaluation Copy. Do not reproduce. For information visit www.cadcim.com

Unsuppressing the Suppressed Features 7-21
Deleting Features 7-21
Copying and Pasting Features 7-21
Rolling Back a Model to a Feature 7-22
Converting Ordered Features to Synchronous 7-22
Assigning Color to a Part, Feature, or Face 7-23
Playing Back the Construction of Features 7-23
Modifying Faces in the Ordered Part Environment 7-23
Moving Faces 7-23
Rotating Faces 7-24
Offsetting Faces 7-24
Copying Sketch Objects to Another Sketch 7-25
Checking the Physical Properties of a Model 7-25
Modifying the Display of Construction Entities 7-26
Tutorial 1 7-27
Tutorial 2 7-33
Tutorial 3 7-37
Tutorial 4 7-41
Self-Evaluation Test 7-45
Review Questions 7-46
Exercise 1 7-47
Exercise 2 7-48
Exercise 3 7-49

Chapter 8: Advanced Modeling Tools-II

Advanced Modeling Tools 8-2
Creating Threads (Synchronous) 8-2
Creating Slots 8-4
Adding Drafts to the Model 8-7
Adding Ribs to the Model (Ordered) 8-8
Adding Thin Wall Features (Ordered) 8-11
Adding Thin Region Features (Ordered) 8-13
Adding a Lip to the Model 8-15
Creating Web Networks (Ordered) 8-16
Creating Vents 8-18
Creating Mounting Bosses (Ordered) 8-21
Reordering Features 8-24
Tutorial 1 8-25
Tutorial 2 8-28
Tutorial 3 8-32
Tutorial 4 8-37
Self-Evaluation Test 8-40
Review Questions 8-41
Exercise 1 8-42
Exercise 2 8-43
Exercise 3 8-44

Evaluation Copy. Do not reproduce. For information visit www.cadcim.com

Chapter 9: Advanced Modeling Tools-III

Advanced Modeling Tools 9-2
Creating Swept Protrusions 9-2
Creating Swept Cutouts 9-9
Creating Lofted Protrusions 9-9
Creating Lofted Cutouts 9-14
Creating 3D Sketches (Synchronous) 9-14
Creating Helical Protrusions 9-18
Creating Helical Cutouts 9-23
Creating Normal Protrusions 9-23
Creating Normal Cutouts 9-24
Working with Additional Bodies 9-24
    Inserting a New Body 9-24
    Applying Boolean Operations to Bodies 9-25
Tutorial 1 9-29
Tutorial 2 9-37
Tutorial 3 9-46
Self-Evaluation Test 9-52
Review Questions 9-53
Exercise 1 9-54
Exercise 2 9-55
Exercise 3 9-56

Chapter 10: Assembly Modeling-I

The Assembly Environment 10-2
    Working with the Assembly Environment 10-2
    Types of Assembly Design Approaches 10-2
Creating the Bottom-Up Assembly 10-3
    Assembling the First Component 10-3
    Assembling the Second Component 10-4
    Applying Assembly Relationships Enhanced 10-5
    Points to be Remembered while Assembling Components 10-14
Creating the Top-Down Assembly 10-15
    Creating a Component in the Top-down Assembly 10-15
Creating the Pattern of Components in an Assembly 10-16
    Creating a Reference Pattern 10-16
Mirroring a Component in an Assembly 10-17
Creating Clones of the Component 10-18
Creating Material Removal Features in an Assembly 10-20
    Assembly Features 10-20
    Assembly-driven Part Features 10-20
    Creating Part Features 10-20
    Tools for Material Removal in an Assembly 10-20
    Subtracting Material from a Part Using Another Part 10-22
Moving the Individual Components 10-22
Moving Multiple Components 10-22

Evaluation Copy. Do not reproduce. For information visit www.cadcim.com

Tutorial 1 10-23
Tutorial 2 10-39
Self-Evaluation Test 10-48
Review Questions 10-48
Exercise 1 10-50
Exercise 2 10-52

Chapter 11: Assembly Modeling-II

Creating Subassemblies 11-2
Editing the Assembly Relationships 11-3
Modifying the Values 11-3
Applying Additional Relationships 11-3
Modifying Assembly Relationships 11-4
Editing the Assembly Components 11-5
Modifying Synchronous Components in the Assembly Environment 11-6
Dispersing Subassemblies 11-6
Replacing Components 11-6
Replace Part 11-6
Replace Part with New Part 11-7
Replace Part with Copy 11-8
Simplifying Assemblies Using Visibility Options 11-8
Hiding and Displaying Components 11-8
Changing Transparency Conditions 11-9
Interference Detection in Assemblies 11-9
Interference Options 11-9
Checking for the Interference 11-11
Creating the Exploded State of Assemblies 11-12
Automatic Explode 11-12
Unexploding Assemblies 11-13
Exploding Assemblies Manually 11-13
Changing the Distance between Components 11-15
Repositioning the Parts 11-15
Removing the Parts 11-16
Tutorial 1 11-18
Tutorial 2 11-25
Tutorial 3 11-33
Self-Evaluation Test 11-36
Review Questions 11-37
Exercise 1 11-38
Exercise 2 11-44

Chapter 12: Generating, Editing, and Dimensioning the Drawing Views

The Draft Environment 12-2
Types of Views Generated in Solid Edge 12-3
Generating Drawing Views 12-4

Evaluation Copy. Do not reproduce. For information visit www.cadcim.com

Generating the Base View 12-4
Generating the Principal View 12-8
Generating the Auxiliary View 12-9
Generating the Section View 12-11
Generating the Revolved Section Views 12-13
Generating the Broken-Out Section View 12-15
Generating the Detail View 12-17
Generating the Broken View 12-18
Inheriting Break Lines to a Principal, Section, or Auxiliary View 12-19
Working with Interactive Drafting 12-19
Manipulating Drawing Views 12-19
Aligning Drawing Views 12-20
Modifying the Scale of Drawing Views 12-20
Cropping Drawing Views 12-21
Moving the Drawing Views 12-21
Rotating the Drawing Views 12-22
Applying the Hatch Pattern 12-22
Modifying the Properties of Drawing Views 12-22
Adding Annotations to Drawing Views 12-24
Displaying Center Marks and Center Lines in a Drawing View 12-24
Creating a Bolt Hole Circle 12-24
Generating Annotations 12-25
Adding Reference Dimensions to Drawing Views 12-26
Adding Callouts to Drawing View 12-28
Adding Surface Texture Symbols to a Drawing View 12-29
Specifying the Edge Conditions 12-30
Adding a Feature Control Frame to Drawing View 12-30
Adding Datum Target to a Drawing View 12-31
Adding Datum Frame to a Drawing View 12-32
Adding New Drawing Sheets 12-33
Editing the Default Sheet Format 12-33
Updating Drawing Views 12-33
Evolving a 3D Model from a 2D Drawing 12-34
Generating the Exploded View of Assemblies 12-35
Creating Associative Balloons and Parts List 12-37
Parts List Properties Dialog Box 12-38
Setting the Text Properties 12-41
Steps to Generate Parts List and Balloons 12-42
Tutorial 1 12-43
Tutorial 2 12-48
Tutorial 3 12-53
Tutorial 4 12-59
Self-Evaluation Test 12-63
Review Questions 12-64
Exercise 1 12-65
Exercise 2 12-66

Evaluation Copy. Do not reproduce. For information visit www.cadcim.com

Chapter 13: Surface Modeling

Surface Modeling 13-2
Creating Surfaces in Solid Edge 13-2
    Creating an Extruded Surface 13-2
    Creating a Revolved Surface 13-3
    Creating a Swept Surface 13-4
Creating Surfaces Using the BlueSurf Tool (Synchronous and Ordered) 13-6
Inspecting Surface Curvature at a Section 13-13
Creating Surfaces Using the Bounded Tool 13-14
Stitching Multiple Surfaces to Create a Single Surface 13-15
Replacing the Existing Surfaces 13-16
Creating Offset Surfaces 13-16
Copying a Surface 13-16
Creating a Ruled Surface 13-17
Creating a BlueDot (Ordered) 13-19
Creating a Curve at the Intersection of Two Surfaces 13-20
Trimming the Surfaces 13-20
Extending the Surfaces 13-21
Replacing the Faces of a Part with a Surface 13-22
Splitting Faces 13-23
Using the Intersect Tool 13-23
Creating Curves in 3D by Selecting Keypoints 13-24
Creating Curves by Table 13-26
Projecting the Curves on Surfaces 13-26
Creating a Curve at the Projection of Two Curves 13-28
Drawing a Curve on a Surface 13-28
Deriving Curves 13-29
Splitting a Curve 13-29
Splitting a Body 13-29
Adding Thickness to a Surface 13-30
Creating Rounds Using Blending 13-31
Adding a Draft 13-36
Using the Parting Split Tool 13-39
Using the Parting Surface Tool 13-39
Using the Offset Edge Tool 13-40
Tutorial 1 13-40
Tutorial 2 13-45
Self-Evaluation Test 13-52
Review Questions 13-52
Exercise 1 13-53
Exercise 2 13-54
Exercise 3 13-55

Chapter 14: Sheet Metal Design

The Sheet Metal Module 14-2
Setting the Sheet Metal Part Properties 14-3

Evaluation Copy. Do not reproduce. For information visit www.cadcim.com

Creating the Base Feature of the Sheet Metal Part 14-7
Adding Flanges to a Sheet Metal Part 14-8
Adding Flanges in Synchronous Sheet Metal 14-12
Creating Contour Flanges 14-13
Adding Contour Flanges in Synchronous Sheet Metal 14-16
Creating Lofted Flanges 14-16
Adding the Jog to the Sheet 14-18
Bending the Sheet Metal Part 14-19
Unbending the Sheet Metal Part 14-20
Rebending the Sheet Metal Part 14-20
Filleting or Chamfering Corners of a Sheet Metal Part 14-21
Closing the 2 Bend Corners of a Sheet Metal Part 14-21
Creating Dimples in a Sheet Metal Part 14-24
Creating Louvers in a Sheet Metal Part 14-26
Creating Drawn Cutouts in a Sheet Metal Part 14-29
Creating Beads in a Sheet Metal Part 14-29
Embossing Solids onto a Sheet Metal 14-32
Adding Gussets to a Sheet Metal Part 14-32
Adding Hems 14-36
Converting a Solid Part into a Sheet Metal Part 14-38
Ripping the Corners of a Solid Part 14-40
Adding Sheet Metal Features to a Solid Part 14-40
Creating the Flat Pattern of a Sheet Metal Part 14-41
    Creating Flat Patterns in the Flat Pattern Environment 14-41
    Saving a Sheet Metal Part in the Flat Pattern Format 14-42
Tutorial 1 14-43
Tutorial 2 14-51
Self-Evaluation Test 14-56
Review Questions 14-56
Exercise 1 14-57
Exercise 2 14-59

Chapter 15: Introduction to Convergent Modeling

Convergent Modeling 15-2
    Convert to Mesh Body 15-2
Generative Designing 15-4
    Generative Design Using Solid Edge 15-4
Additive Manufacturing 15-15
    Additive Manufacturing (3D Printing) Using Solid Edge 2024 15-15
Tutorial 1 15-18
Tutorial 2 15-23
Self-Evaluation Test 15-28
Review Questions 15-29
Exercise 1 15-29

Evaluation Copy. Do not reproduce. For information visit www.cadcim.com

PROJECTS AVAILABLE FOR FREE DOWNLOAD

In this textbook, four projects are available for free download. You can download these projects from our website **www.cadcim.com**. To download these projects, follow the path: *Textbooks > CAD/CAM > Solid Edge > Solid Edge 2024 for Designers, 21st Edition > Projects for Free Download* and then click on the project name to download it in pdf format.

Note

For additional projects, visit **www.cadcim.com** and follow the path: *Textbooks > CAD/CAM > Parametric Solid Modeling Projects > Parametric Solid Modeling Projects > Projects for Free Download*

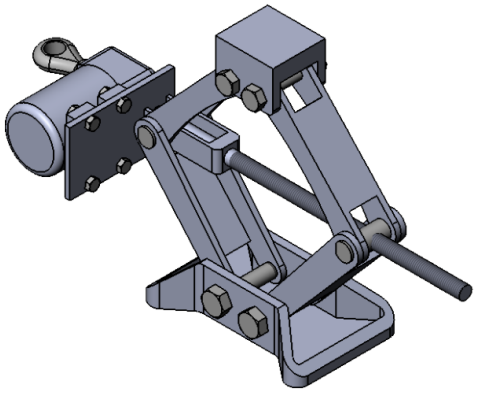

Project 1: *Car Jack Assembly*

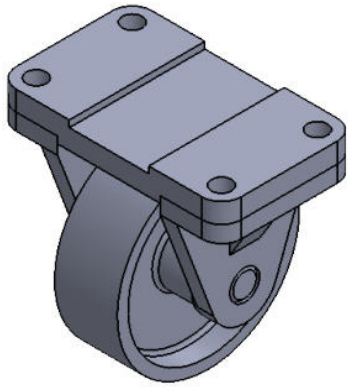

Project 2: *Wheel Assembly*

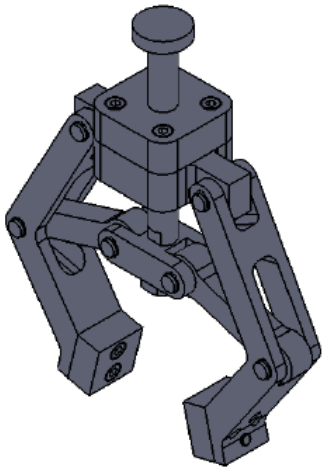

Project 3: *Pneumatic Gripper Assembly*

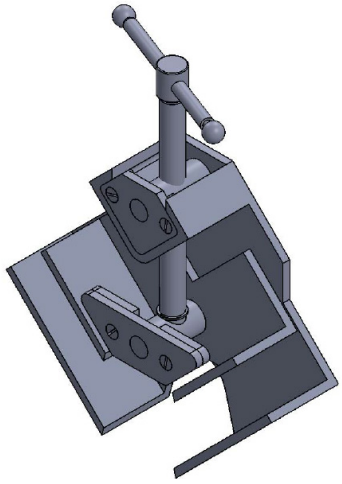

Project 4: *Angle Clamp Assembly*

Evaluation Copy. Do not reproduce. For information visit www.cadcim.com

This page is intentionally left blank