2

Standard Primitives

Learning Objectives

After completing this chapter, you will be able to:

- *Understand viewport navigation controls*
- *Understand selection techniques*
- *Understand Scene Explorer/Layer Explorer*
- *Create standard primitives*
- *Render a still image*
- *Change the background color of a scene*



INTRODUCTION

In this chapter, you will learn to create the default 3D objects called standard primitives. These geometric primitives are parametric objects. Additionally, you will learn about viewport navigation controls and selection techniques in this chapter.

VIEWPORT NAVIGATION CONTROLS

The tools at the lower right corner of the Autodesk 3ds Max screen are known as viewport navigation controls. These tools are used to control the display and navigation of the viewport.

To adjust the view of an object in a viewport, you need to be familiar with the tools in the viewport navigation controls area. Note that some of the tools mentioned below are available in a flyout which will be displayed when you click on the arrow on the lower right corner of the tool icon. These tools are discussed next.



The **Zoom** tool is used to increase or decrease the magnification in the active viewport. You can zoom in by pressing the left mouse button and dragging the cursor up. Similarly, you can zoom out by pressing the left mouse button and then dragging the cursor down.



The **Zoom All** tool is the same as the **Zoom** tool with the only difference that this tool zooms the display in all the four viewports simultaneously.



The **Zoom Extents** tool is used to view all objects in the active viewport.



The **Zoom Extents Selected** tool is used to view all selected objects in the active viewport.



The **Zoom Extents All** tool is the same as the **Zoom Extents** tool with the only difference that this tool is used to view all objects in all viewports.



The **Zoom Extents All Selected** tool is the same as the **Zoom Extents Selected** tool with the only difference that this tool is used to view all selected objects in all viewports.



The **Zoom Region** tool is used to define the area to be magnified and viewed in the current viewport. The area to be magnified is specified by a rectangle created by dragging the cursor. The **Zoom Region** tool is not available in the Camera viewport.



The **Field-of-View** tool is available only in the Perspective and Camera viewports. It is used to change the field of view of the scene in these viewports. More the field of view of a camera, more will be the visibility of the scene, and vice-versa.



The **Pan View** tool is used to pan the scene in the viewport. This tool enables you to display the contents of the viewport that are outside the display area without changing the magnification of the current viewport.



The **2D Pan Zoom Mode** tool is available in Perspective and Camera viewports only. On invoking this tool, you can pan and zoom the scene outside the rendering frame. In other

Evaluation Copy. Do not reproduce. For information visit www.cadcim.com

words, the position of the camera does not change when you pan or zoom in the scene. If the **2D Pan Zoom Mode** tool is chosen, an additional viewport label appears on the right of the other viewport labels.



The **Walk Through** tool is available in Perspective and Camera viewports only. It allows you to navigate through these viewports by pressing a set of shortcut keys. On invoking this tool, the cursor changes into a circle with a dot at its center. Press the arrow keys to navigate through the viewport. On pressing the arrow keys, the cursor shows a directional arrow indicating the navigation direction.



The **Orbit** tool is used to rotate the viewport around its view center. This enables you to see three-dimensional (3D) view of the objects in the Perspective viewport. You can also rotate the Top, Front, and Left viewports. But in such cases, the respective viewport becomes the Orthographic viewport.



The **Orbit Selected** tool is the same as the **Orbit** tool with the only difference that it is used to rotate the viewport around the center of the current selection.



The **Orbit SubObject** tool is the same as the **Orbit** tool with the only difference that it is used to rotate the viewport around the center of the current sub-object selection.



The **Orbit Point of Interest** tool uses the location of the cursor as the center of rotation. The point of interest remains at the same position in the viewport while the view rotates around its center.



The **Maximize Viewport Toggle** tool is used to maximize the active viewport so that you can view only the active viewport instead of all the four viewports.



The **Dolly Camera** tool is available in the Camera viewport only. It is used to move the camera toward and away from the target. If the camera passes through the target, the camera flips 180 degrees and moves away from its target.



The **Dolly Target** tool is only available if viewport's camera is a target camera. This tool is used to move the target of the camera toward and away from it. If the target passes through the camera to the other side, the camera view will be reversed. Otherwise, there will be no visual change in the camera viewport.



The **Dolly Camera + Target** tool is only available if viewport's camera is a target camera. This tool is used to move both the camera and its target.



The **Roll Camera** tool is available in the Camera viewport only. It rotates the target camera about its line of sight and rotates a free camera about its local Z axis.

SELECTION TECHNIQUES

In 3ds Max, you can select objects using various tools such as **Select Object**, **Select by Name**, **Select and Move**, and so on. These tools are discussed next.

Evaluation Copy. Do not reproduce. For information visit www.cadcim.com

Select Object Tool

Quad Menu:	Select
Main Toolbar:	Select Object
Keyboard:	Q



The **Select Object** tool is used to select one or more objects in the viewport. To select an object, choose this tool and move the cursor over the object; the cursor will convert into a selection cursor. Next, press the left mouse button; the object will be selected. To select more than one object at a time, hold the CTRL key and select the objects that you want to add to the selection. To remove an object from the selection, press and hold the ALT key and then click on the object that you want to remove from the selection.

Select by Name Tool

Menu bar:	Edit > Select By > Name
Main Toolbar:	Select by Name
Keyboard:	H



The **Select by Name** tool is used to select an object from the list of objects in the scene. When you choose the **Select by Name** tool from **Main Toolbar**, the **Select From Scene** dialog box will be displayed. If there are some components in the scene, then those components will be displayed in this dialog box, as shown in Figure 2-1. Now, select an object in the list and choose the **OK** button. Alternatively, you can double-click on the object name in the list to select it. You can also select more than one object by holding the SHIFT or CTRL key. The buttons at the top of the dialog box are used to filter the objects in the list.

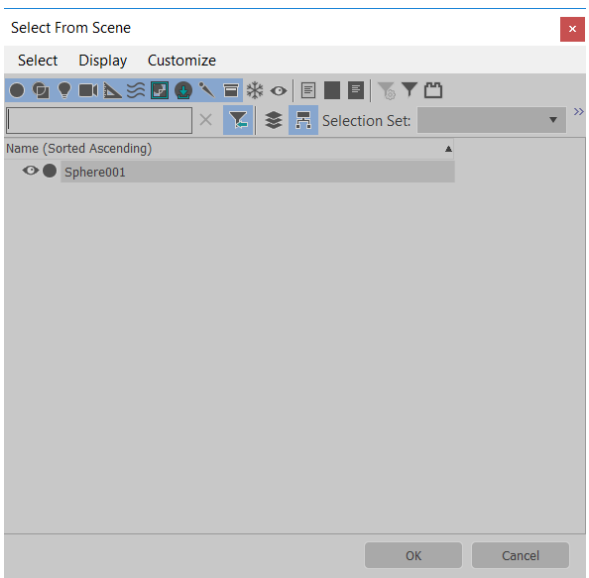

Figure 2-1 *The* ***Select From Scene*** *dialog box*

Evaluation Copy. Do not reproduce. For information visit www.cadcim.com

Select and Move Tool

Quad Menu:	Move
Main Toolbar:	Select and Move
Keyboard:	W



The **Select and Move** tool is used to select and move the objects in the viewports. You can move an object by selecting it and then dragging the mouse along the X, Y, or Z axis. You can also move the selected object in the XY, YZ, or ZX plane. To move the selected object along one of the axes, choose this tool and then select the object; the move gizmo will be displayed. Move the cursor over the axis along which you want to move the object, press the left mouse button, and then drag the cursor. Similarly, to move the object in one of the planes, move the cursor over the plane displayed between the two axes; the plane will be highlighted in yellow. Next, press the left mouse button and drag the cursor.

Select and Rotate Tool

Quad Menu:	Rotate
Main Toolbar:	Select and Rotate
Keyboard:	E



The **Select and Rotate** tool is used to rotate the objects in the viewport along the X, Y, or Z axis. To rotate the object along one of the axes, choose the **Select and Rotate** tool, and then select the object; a rotate gizmo will be displayed along with the X, Y, and Z axes. Next, move the cursor over the axes along which you want to rotate the object, press the left mouse button, and then drag the cursor. When you rotate the object, a transparent slice will be displayed which will provide a visual representation of the direction and the degree of rotation, refer to Figure 2-2. Also, you can view the degree of rotation in the X, Y, and Z axes in the coordinates displayed in the Coordinate display area at the bottom of the screen.

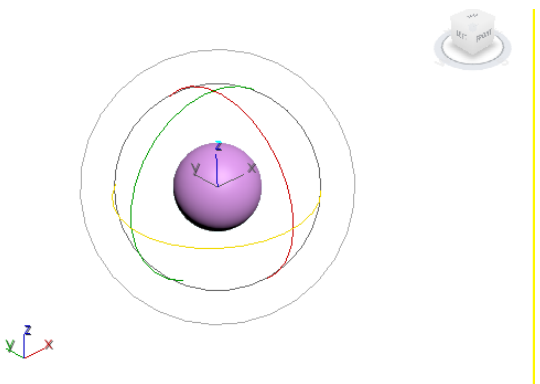

Figure 2-2 *The circular gizmo in the Perspective viewport displayed while rotating the object*

Evaluation Copy. Do not reproduce. For information visit www.cadcim.com

Select and Scale Tools

Quad Menu:	Scale
Main Toolbar:	Select and Scale
Keyboard:	R

There are three types of tools that are used to scale an object. These tools are available in the **Select and Scale** flyout and are discussed next.

Select and Uniform Scale Tool



The **Select and Uniform Scale** tool is used to scale the objects proportionally along the three axes. To scale an object uniformly along all the three axes, choose the **Select and Uniform Scale** tool from **Main Toolbar** and select the object; the scale gizmo will be displayed, as shown in Figure 2-3. Move the cursor to the center of the gizmo and make sure its central portion is highlighted, refer to Figure 2-3. Next, drag the cursor up or down to scale the selected object. You can also perform non-uniform scaling using this tool. To do so, move the cursor over the axis along which you want to scale the object, refer to Figure 2-4, and then drag the cursor. Similarly, you can perform non-uniform scaling along the XY, YZ, or ZX plane by selecting the required plane and then dragging that plane, refer to Figure 2-5.

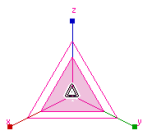

Figure 2-3 *The scale gizmo for uniform scaling*

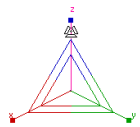

Figure 2-4 *Selecting the Z-axis for non-uniform scaling*

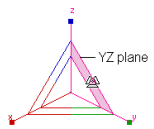

Figure 2-5 *Selecting the YZ plane for non-uniform scaling*

Select and Non-uniform Scale Tool



The **Select and Non-uniform Scale** tool is used to scale an object along a particular axis or plane non-uniformly. To scale the object, choose the **Select and Non-uniform Scale** tool from the **Select and Scale** flyout, and then select the object. Move the cursor over the X, Y, or Z axis along which you want to scale the object and drag the cursor to modify the shape of the object. Similarly, you can perform the non-uniform scaling along the XY, YZ, or ZX plane. You can also perform uniform scaling in the same manner as described in the **Select and Uniform Scale** tool.

Select and Squash Tool



The **Select and Squash** tool is used to stretch and squash the object along the selected axis. To squash the object along one of the axes, choose the **Select and Squash** tool and select the object. Move the cursor over the axis along which you want to squash it. Next, drag the cursor. Similarly, you can squash the selected object along the XY, YZ, or ZX plane. To do so, move the cursor over the plane displayed between the two axes and drag the cursor to squash the object along that plane.

Evaluation Copy. Do not reproduce. For information visit www.cadcim.com

Note

By default, the color of the X-axis, the Y-axis, and the Z-axis of the transform gizmos is red, green, and blue, respectively. When you move the cursor over any one of these axes, it gets activated and turns yellow. You can see the colors of these axes displayed at the bottom left corner of each viewport. Also, the colored axes are displayed while selecting an object using the ***Select and Move****,* ***Select and Rotate****, or* ***Select and Scale*** *tool. Figures 2-6, 2-7, and 2-8 show the move gizmo, rotate gizmo, and scale gizmo, respectively.*

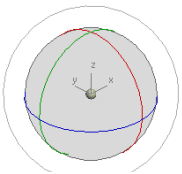

Figure 2-6 *The move gizmo*

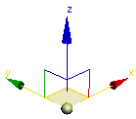

Figure 2-7 *The rotate gizmo*

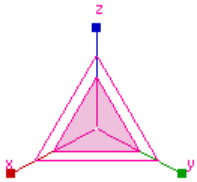

Figure 2-8 *The scale gizmo*

Select and Place Tool



This tool is used to position and orient an object with respect to another object. The placed object changes its orientation according to the shape of the object on which it is placed. Figure 2-9 shows the placement of the objects in the Perspective viewport. To place an object on another object, choose the **Select and Place** tool from the **Select and Place** flyout in the **Main Toolbar** and then drag the object onto the other object. On achieving the required orientation of the object, release the left mouse button; the selected object will be aligned with the target object along the Z axis, as shown in Figure 2-10.

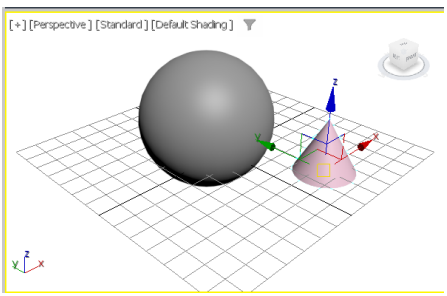

Figure 2-9 *The placement of the objects in the Perspective viewport*

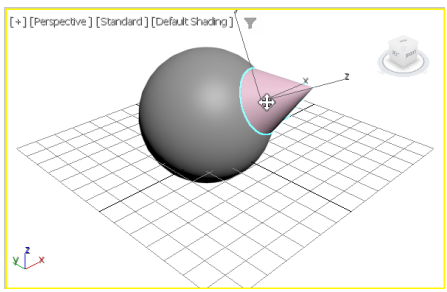

Figure 2-10 *The selected object aligned with other object*

Select and Rotate Tool



Choose this button to rotate the object around the axis specified in the **Object Up Axis** area. You can also choose the **Select and Rotate** tool from the **Select and Place** flyout in the **Main Toolbar** to rotate the object. To modify placement settings of the object, right-click on the **Select and Place** tool; the **Placement** dialog box will be displayed, refer to Figure 2-11. The options in this dialog box are discussed next.

Evaluation Copy. Do not reproduce. For information visit www.cadcim.com

Use Base as Pivot

If you choose this button, the base of the object to be placed will act as the pivot point of the object. This is useful when the pivot is not located at the base of the object.

Pillow Mode

When you choose this button, the object to be placed will move around the other object without intersecting it.

Autoparent

If you choose this button, the object to be placed will act as the child of the object on which it is being placed.

Object Up Axis Area

The **+Z** button is chosen by default in this area. As a result, the orientation of the object will be along the z axis. To change the axis of orientation of the object, you need to choose the required button from this area.

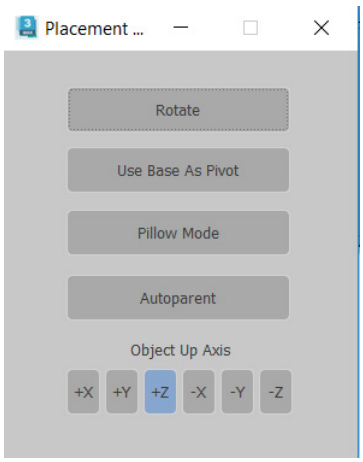

Figure 2-11 *The* ***Placement*** *dialog box*

SCENE MANAGEMENT

The Scene Explorer and Layer Explorer are used to manage complex scenes in an efficient manner. The Scene Explorer can be switched to Layer Explorer and vice-versa. These explorers are discussed next.

Scene Explorer

The Scene Explorer is used to view, select, filter, and sort objects. It is also used to rename, delete, group, freeze, and hide objects. By default, the **Scene Explorer** is docked on the left in the default workspace, refer to Figure 2-12.

The options in the Scene Explorer menu bar are used to select objects, customize the Scene Explorer Toolbar, define the type of objects for the list displayed, and so on. The **Toggle Display Toolbar** button is used to toggle the visibility of the Scene Explorer Toolbar. The Search field is used to search an object from the list of objects thereby adding a filter to the list of objects. The **Remove Filter** button is used to remove the applied filter.

The Scene Explorer Toolbar is located on the left in the Scene Explorer. The buttons in this toolbar are used to list specific type of objects in the Scene Explorer such as lights, shapes, cameras, and so on.

If some of the buttons on the right of the **Toggle Display Toolbar** button are not visible, click on the double arrow located at the upper right corner or resize the Scene Explorer to make them visible. These buttons are discussed next.

The **Lock Cell Editing** button is used to lock the editing of the cells in the Scene Explorer. The **Pick Parent** button is used to select or change parent of the selected object. The **Select**

Evaluation Copy. Do not reproduce. For information visit www.cadcim.com

Children button is used to select all the child objects and layers of the selected parent object. Alternatively, if you double-click on the parent object in the Scene Explorer, the parent object and all its child objects will be selected.

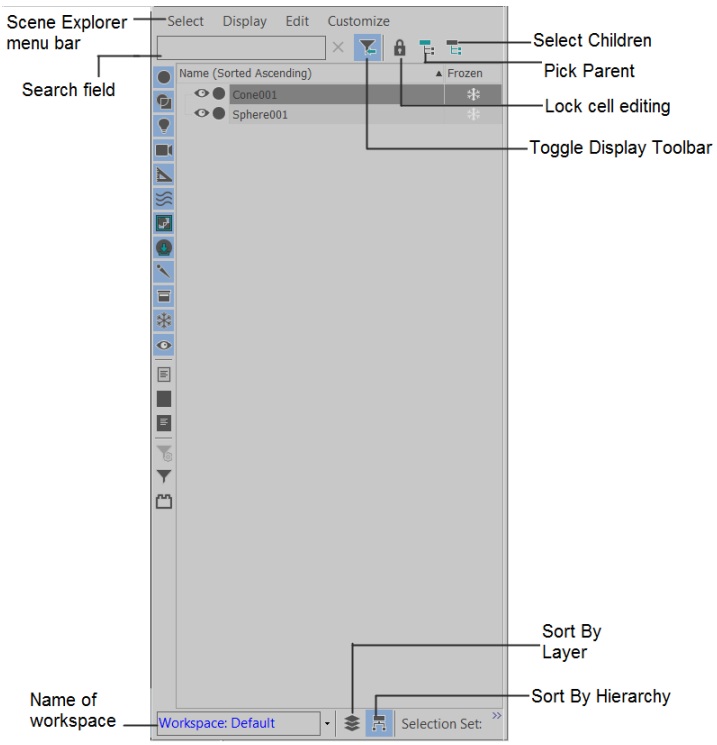

Figure 2-12 *The* ***Scene Explorer***

When you right-click in the area displaying a list of objects, a quad menu will be displayed. The options in this quad menu are used to rename object, freeze object, and so on. The name of the workspace used in the scene is displayed in the field located at the bottom of the Scene Explorer. When you click on the arrow at the right of this field, a flyout will be displayed, as shown in Figure 2-13. The options in this flyout are used to convert the Scene Explorer to **Property Explorer**, **Light Explorer**, and so on. Figure 2-14 shows the Property Explorer. The **Sort By Layer** button is used to switch the Scene Explorer to **Layer Explorer**.

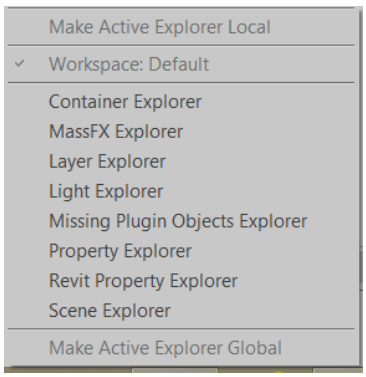

Figure 2-13 *The flyout displayed*

The **Layer Explorer** is discussed next.

Layer Explorer

The Layer Explorer will be displayed in the interface on choosing the **Sort By Layer** button in the Scene Explorer, refer to Figure 2-12. Alternatively, click on the arrow on the right of the field located at the bottom of the Scene Explorer; a flyout will be displayed. Choose the Layer Explorer from the flyout displayed, refer to Figure 2-13. By default, the **Layer Explorer** is

Evaluation Copy. Do not reproduce. For information visit www.cadcim.com

displayed with a **0 (default)** layer, as shown in Figure 2-15. You can create any number of layers in the Layer Explorer by using the **Create New Layer** button.

To add an object to the newly created or existing layer, expand the **0 (default)** layer and then select the object from the list of objects in the Layer Explorer and right-click on it; a quad menu will be displayed, refer to Figure 2-16. Choose **Add Selection To > New Parent (pick)** from the quad menu and select the desired layer from the list of layers displayed; the selected object is transferred to the selected layer. You can also create a new layer and add the selected object to it by using the quad menu. To do so, select the object from the list of objects displayed. Next, right-click on it and then choose **Add Selected To > New Layer** from the quad menu displayed; a new layer will be created and the selected object will be added to it. To rename a layer, right-click on it and choose **Rename** from the quad menu displayed.

If the buttons on the right of the **Toggle Display Toolbar** button are not visible in the **Layer Explorer**, click on the double arrow located at the upper right corner or resize the Layer Explorer to make them visible. These buttons are discussed next.

The **Create New Layer** button is used to create a new layer. The **Make Selected Layer Active** button is used to change the selected layer to an active layer.

To add an object to the active layer, select the object and choose the **Add to Active Layer** button.

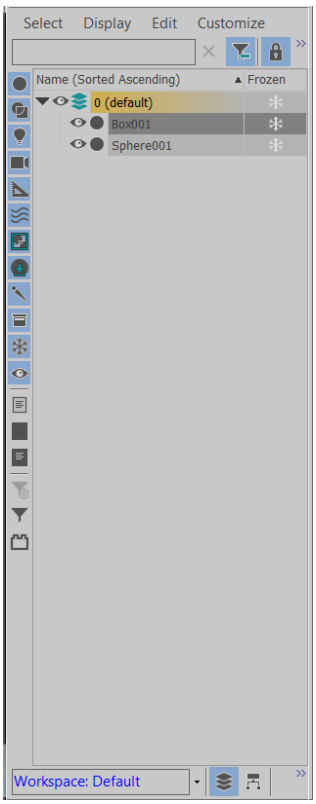

Figure 2-14** The **Property Explorer

Managing Local and Global Scene Explorers

There are two types of scene explorers in Autodesk 3ds Max: global and local. Local scene explorers can be used in current scene only whereas global scene explorers can be used in any scene. By default, all the scene explorers are global. To change a global scene explorer to a local scene explorer, click on the arrow on the right of the field available at the bottom of the Scene Explorer; a flyout will be displayed, refer to Figure 2-13. Next, choose the **Make Active Explorer Local** option from the flyout. Similarly, to change a local scene explorer to a global scene explorer, choose the **Make Active Explorer Global** option from the flyout.

To manage various local explorers like Scene Explorer, Revit Property Explorer, and so on, choose **Tools > Manage Local Explorers** from the menu bar; the **Manage Local Scene Explorers** dialog box will be displayed, refer to Figure 2-17. Using this dialog box, you can load a Scene Explorer into a scene. To do so, choose the **Load** button; the **Load Scene Explorer** dialog box will be displayed. Select the desired Scene Explorer from this dialog box and choose **Open**; the Scene Explorer will be opened in the current scene as a local Scene Explorer and will be added to the dialog box. You can also rename or delete local Scene Explorer(s) using this dialog box.

Evaluation Copy. Do not reproduce. For information visit www.cadcim.com

To save a local Scene Explorer, choose the **Save** button; the **Save Scene Explorer** dialog box will be displayed. Next, enter the desired name in the **File name** text box and choose **Save**; the Scene Explorer will be saved with the desired name.

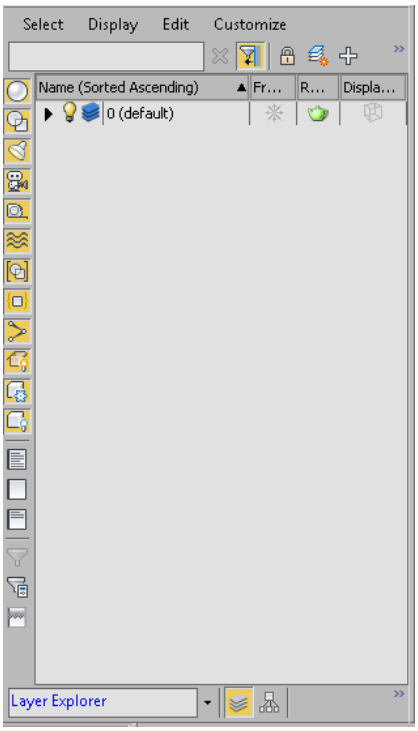

Figure 2-15 *The* ***Layer Explorer***

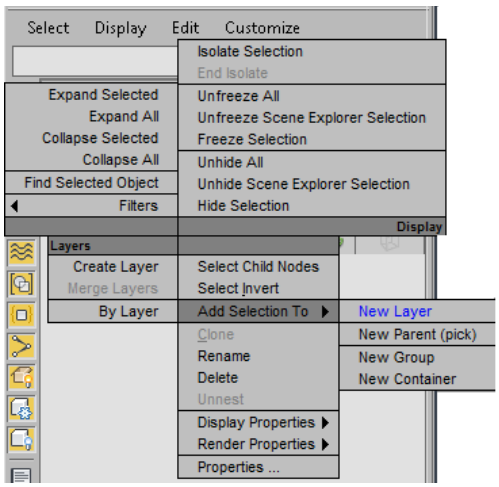

Figure 2-16 *The quad menu*

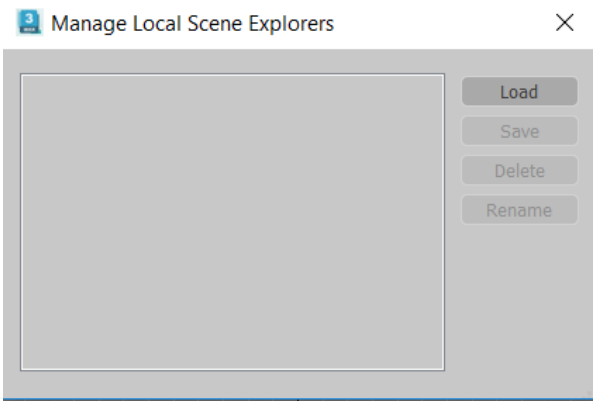

Figure 2-17 *The* ***Manage Local Scene Explorers*** *dialog box*

Evaluation Copy. Do not reproduce. For information visit www.cadcim.com

AXIS CONSTRAINTS TOOLBAR

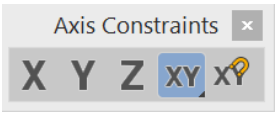

***Figure 2-18** The **Axis Constraints** toolbar*

The buttons in the **Axis Constraints** toolbar are used to specify the axis or plane along which the transformation would be restricted. The transformation includes movement, rotation, and scaling of an object. The **Axis Constraints** toolbar is not displayed by default in the interface. To display it, right-click in the blank area on the **Main Toolbar**; a shortcut menu will be displayed. Choose **Axis Constraints** from the shortcut menu; the toolbar will bedisplayed on the screen, as shown in Figure 2-18. Now, choose one of the buttons available in the **Axis Constraints** toolbar to perform the transformation along the selected axis. You can use the F5, F6, and F7 function keys to invoke the **X**, **Y**, and **Z** constraints, respectively. To toggle between the **XY**, **YZ**, and **XZ** axes, you can use the F8 function key.

STANDARD PRIMITIVES

Autodesk 3ds Max has several basic three-dimensional geometric shapes which are known as standard primitives such as box, cone, sphere, cylinder, torus, tube, and so on. You can use these primitives to create simple 3D models such as a table, box, chair, and so on. All the standard primitives can be created dynamically using the mouse or by specifying the parameters in the **Keyboard Entry** rollout of the **Command Panel**.

To create the standard primitives, choose **Create > Geometry** in the **Command Panel**. By default, the **Standard Primitives** option is selected in the drop-down list below the **Geometry** button. Now, activate the viewport in which you want to create the primitives. Next, choose the corresponding tool from the **Object Type** rollout. In the following sectionyou will learn to create and modify the standard primitives using various tools available in the **Object Type** rollout.

Creating a Box

Menu bar:	Create > Standard Primitives > Box
Command Panel:	Create > Geometry > Standard Primitives > Object Type rollout > Box

To create a box, activate the viewport by clicking in it. Next, choose the **Box** tool from the **Object Type** rollout; the **Name and Color**, **Creation Method**, **Keyboard Entry**, and **Parameters** rollouts will be displayed, as shown in Figure 2-19. Press and hold the left mouse button in the viewport to specify the first corner of the box and then drag the cursor to define the length and width of the box. Release the left mouse button to get the desired length and width. Now, move the cursor up or down to define the height of the box. Click after you get the desired height; the box will be created, as shown in Figure 2-20.

Note

1. To view all the rollouts, position the cursor over any of the rollouts until you see the pan icon (hand). Next, press and hold the left mouse button and drag the cursor in the rollout.

2. This arrow sign on the left side of the rollout head indicates that the rollout is collapsed and the arrow sign indicates that the rollout is expanded.

Evaluation Copy. Do not reproduce. For information visit www.cadcim.com



Tip

If you are creating a standard primitive that requires multiple steps, you can pan or orbit the viewport between the steps. To pan the viewport, drag the cursor with the middle-mouse button or mouse wheel held down. To rotate the viewport, press and hold the ALT key and then drag the cursor with middle-mouse button or mouse wheel held down.

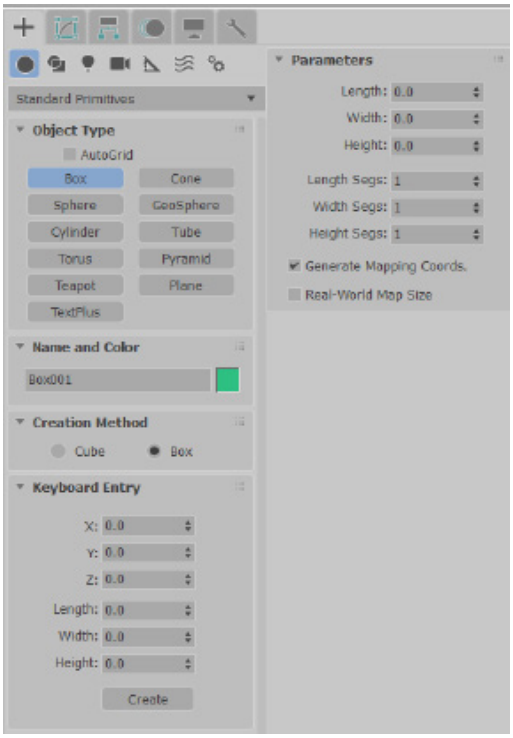

Figure 2-19 *Various rollouts to create a box*

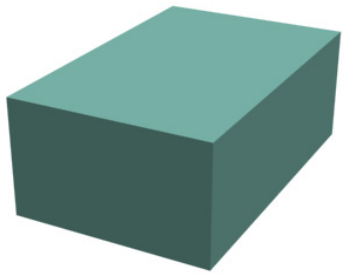

Figure 2-20 *A box displayed in the viewport*

Various rollouts used to create and modify the box are discussed next.

Name and Color Rollout

In Autodesk 3ds Max, a specific name and color is automatically assigned to the newly created box. To modify this name, expand the **Name and Color** rollout. Enter a new name in the text box available in this area and then press ENTER. To change the color of the box, choose the color swatch on the right side of the text box; the **Object Color** dialog box will be displayed, as shown in Figure 2-21. Choose a new color from this dialog box; the selected color will be displayed in the **Current Color** color swatch. Now, choose the **OK** button; the new color will be assigned to the box.

To customize a color, choose the **Add Custom Colors** button in the **Object Color** dialog box; the **Color Selector: Add Color** dialog box will be displayed, as shown in Figure 2-22. Now, customize a new color in this dialog box and choose the **Add Color** button; the new color will be displayed in one of the color swatches in the **Custom Colors** area of the **Object Color** dialog box. Next, choose the **OK** button; the new color will be assigned to the box.

Evaluation Copy. Do not reproduce. For information visit www.cadcim.com

Note

*The options in the **Name and Color** rollout are same for all the standard primitives.*

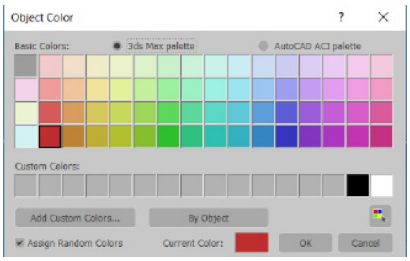

***Figure 2-21** The **Object Color** dialog box*

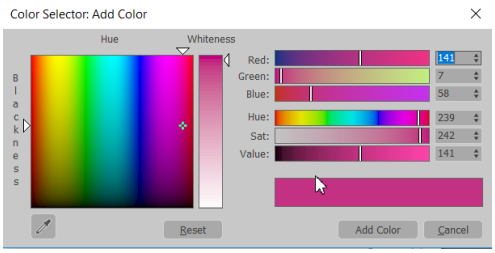

***Figure 2-22 The Color Selector: Add Color** dialog box*

Creation Method Rollout

The options in this rollout are used for creating the box dynamically using the mouse. By default, the **Box** radio button is selected. As a result, you can create a box having different length, width, and height. Select the **Cube** radio button to create a box of equal length, width, and height.

Keyboard Entry Rollout

This rollout is used to create a box by entering the parameters in the **Keyboard Entry** rollout using the keyboard. The **Length**, **Width**, and **Height** spinners are used to specify the length, width, and height of the box, respectively. The **X**, **Y**, and **Z** spinners are used to specify the position of the box in the viewport along the axes of the home grid or of a grid object. By default, the value in these spinners is 0, therefore, the object will be created at the center of the home grid or of a grid object in the viewport. The **Create** button in the **Keyboard Entry** rollout is used to create a box of specified dimensions in the viewport.

Note

1. The grid object is a type of helper object which can be created by you if required.

*2. The **Keyboard Entry** rollout for all the standard primitives is used to create the corresponding primitive by entering the parameters. The method of creating all primitives is the same as already discussed. The only difference is the type and number of parameters entered.*

Parameters Rollout

After creating the box, you can modify its dimensions using the **Parameters** rollout. The **Length**, **Width**, and **Height** spinners are used to specify the length, width, and height, respectively of the box. The **Length Segs**, **Width Segs**, and **Height Segs** spinners are used to define the number of divisions or segments along each axis of the object. By default, the **Generate Mapping Coords**. check box is selected. As a result, mapping coordinates are created automatically with a projection appropriate to the shape of the box. You can select the **Real-World Map Size** check box to correct the scale of the texture mapped materials that are applied to the box. This option allows you to create a material and specify the actual width and height of a 2D texture map in the **Material Editor**.

Evaluation Copy. Do not reproduce. For information visit www.cadcim.com



Note

After creating a primitive in the viewport if you right-click in the viewport to exit the tool, the ***Parameters*** *rollout will disappear from the* ***Create*** *tab. In such a case, to modify the parameters of the primitive, make sure the primitive is selected in the viewport and then choose the* ***Modify*** *tab in the* ***Command Panel****; the* ***Parameters*** *rollout will be displayed in the* ***Modify*** *tab.*

Creating a Sphere

Menu bar:	Create > Standard Primitives > Sphere
Command Panel:	Create > Geometry > Standard Primitives > Object Type rollout > Sphere

To create a sphere, activate a viewport by clicking on it and choose the **Sphere** tool from the **Object Type** rollout; the **Name and Color**, **Creation Method**, **Keyboard Entry**, and **Parameters** rollouts will be displayed, as shown in Figure 2-23. Press and hold the left mouse button to specify the center of the sphere and then drag the cursor to define the radius of the sphere. Release the left mouse button; the sphere of the specified radius will be created, as shown in Figure 2-24. Note that the sphere will be displayed in all viewports.

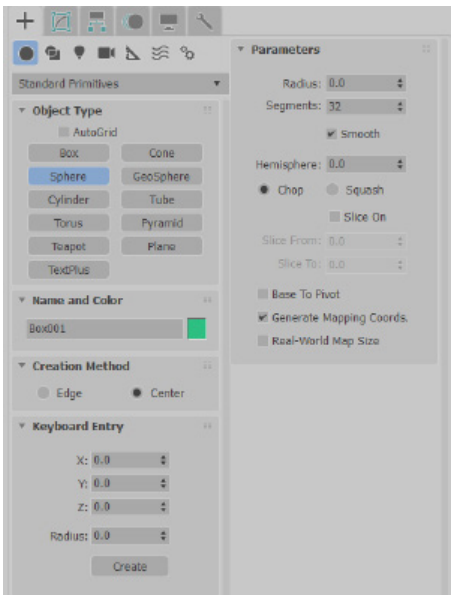

Figure 2-23 *Various rollouts to create a sphere*

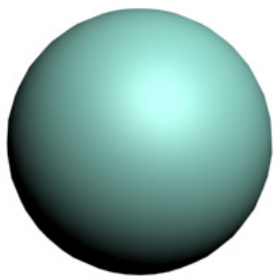

Figure 2-24 *A sphere displayed in the viewport*

Various rollouts used to create and modify the sphere are discussed next.

Creation Method Rollout

The options in this rollout are used for creating a sphere dynamically. By default, the **Center** radio button is selected in this rollout. As a result, the starting point is at the center of the sphere. You can select the **Edge** radio button to set the starting point on an edge at the surface of the sphere.

Evaluation Copy. Do not reproduce. For information visit www.cadcim.com

Evaluation Copy. Do not reproduce. For information visit www.cadcim.com

Parameters Rollout

The options in this rollout are used to modify the parameters of the sphere. The **Radius** and **Segments** spinners are used to specify the radius and divisions of the sphere, respectively. By default, the **Smooth** check box is selected, therefore, the sphere appears smooth. If this check box is cleared, it will give a faceted appearance to the sphere. The **Hemisphere** spinner is used to create a partial sphere. By default, the **Chop** radio button is selected. As a result, the starting point is at the center of the sphere. If you select the **Squash** radio button, the hemisphere will have the same number of vertices and faces as in the complete sphere. On selecting the **Slice On** check box, the **Slice From** and **Slice To** spinners will be enabled. Set the values in the **Slice From** and **Slice To** spinners to specify the start and end angle to create a partial sphere. By default, the pivot point of the sphere is located at its center. If you select the **Base To Pivot** check box, then the pivot point of the sphere will be at its base.

Creating a GeoSphere

Menu bar:	Create > Standard Primitives > GeoSphere
Command Panel:	Create > Geometry > Standard Primitives > Object Type rollout > GeoSphere

The **GeoSphere** tool creates a more regular surface than the **Sphere** tool. To create a geosphere, activate the required viewport and choose the **GeoSphere** tool from the **Object Type** rollout; the **Name and Color**, **Creation Method**, **Keyboard Entry**, and **Parameters** rollouts will be displayed, as shown in Figure 2-25. Press and hold the left mouse button to specify the center of the geosphere and then drag the cursor to define the radius of the geosphere. Next, release the left mouse button to get the desired radius; a geosphere will be created, as shown in Figure 2-26.

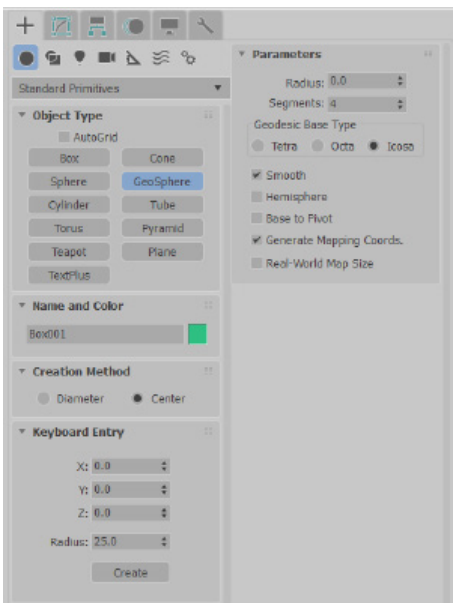

Figure 2-25 *Various rollouts to create a geosphere*

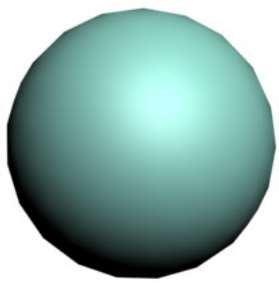

Figure 2-26 *A geosphere displayed in the viewport*

Various rollouts used to create and modify the geosphere are discussed next.

Creation Method Rollout

The options in this rollout are used for creating a geosphere dynamically. By default, the **Center** radio button is selected. As a result, the starting point is at the center of the geosphere. You can select the **Diameter** radio button to specify the first point on an edge at the surface of the geosphere.

Parameters Rollout

The options in this rollout are used to modify the geosphere. The **Radius** and **Segments** spinners are used to specify the radius and divisions of the geosphere, respectively. By default, the **Icosa** radio button is selected in the **Geodesic Base Type** area. As a result, the surface of the geosphere will consist of 20-sided polygons and equilateral triangles, as shown in Figure 2-27. You can select the **Tetra** radio button in the **Geodesic Base Type** area; the resulting surface will consist of tetrahedrons and triangular faces, as shown in Figure 2-28. Similarly, if you select the **Octa** radio button, you will get a surface consisting of octagons and triangular faces, as shown in Figure 2-29. By default, the **Smooth** check box is selected. As a result, it makes hemisphere smooth. On selecting the **Hemisphere** check box, one half of the geosphere will be created. If the **Base to Pivot** check box is selected, it will shift the pivot point of the geosphere to the base.

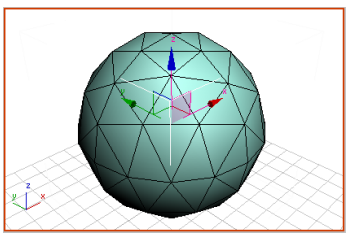

Figure 2-27 *The geosphere displayed on selecting the* ***Icosa*** *radio button*

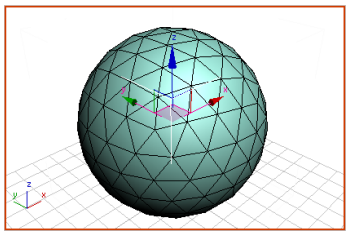

Figure 2-28 *The geosphere displayed on selecting the* ***Tetra*** *radio button*

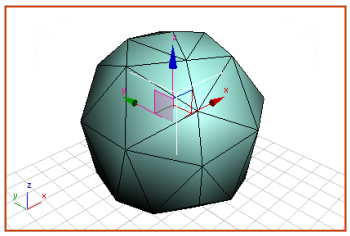

Figure 2-29 *The geosphere displayed on selecting the* ***Octa*** *radio button*

Creating a Cylinder

Menu bar:	Create > Standard Primitives > Cylinder
Command Panel:	Create > Geometry > Standard Primitives > Object Type rollout > Cylinder

The **Cylinder** tool is used to create a cylinder that can be sliced along its major axis. To create a cylinder, activate the required viewport by clicking in it and choose the **Cylinder** tool from the **Object Type** rollout; the **Name and Color**, **Creation Method**, **Keyboard Entry**, and **Parameters** rollouts will be displayed, as shown in Figure 2-30.

Press and hold the left mouse button to specify the center of the base of the cylinder and then drag the cursor to define the radius of the cylinder. Release the left mouse button. Next, move the cursor up or down to define the height of the cylinder. Click after you get the desired height; a cylinder will be created, as shown in Figure 2-31.

Various rollouts used to create and modify the cylinder are discussed next.

Evaluation Copy. Do not reproduce. For information visit www.cadcim.com

Creation Method Rollout

The options in this rollout are the same as those discussed in the **Sphere** tool.

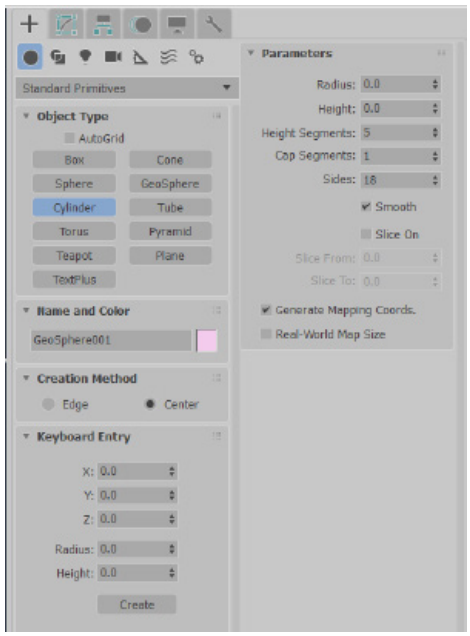

Figure 2-30 *Various rollouts to create a cylinder*

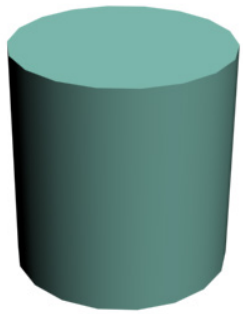

Figure 2-31 *A cylinder displayed in the viewport*

Parameters Rollout

The options in this rollout are used to modify the cylinder. The **Radius** spinner is used to set the radius of the cylinder. The **Height** spinner is used to specify the height for the cylinder. The value in the **Height Segments** spinner defines the number of segments along the height of the cylinder. The value in the **Cap Segments** spinner specifies the number of segments at the top and the bottom of the cylinder. The value in the **Sides** spinner specifies the number of sides on the cylinder. Different shapes of the cylinder can be created by entering different values in the **Sides** spinner. By default, the **Smooth** check box is selected; therefore, the cylinder appears smoother. The **Slice On** check box is the same as described in the **Sphere** tool.

Creating a Cone

Menu:	Create > Standard Primitives > Cone
Command Panel:	Create > Geometry > Standard Primitives > Object Type rollout > Cone

The **Cone** tool is used to create upright or inverted round cones. To create a cone, activate the viewport and then choose the **Cone** tool from the **Object Type** rollout; the **Name and Color**, **Creation Method**, **Keyboard Entry**, and **Parameters** rollouts will be displayed, as shown in Figure 2-32.

Press and hold the left mouse button to specify the center of the base of the cone and then drag the cursor to define radius 1 for the base of the cone. Release the left mouse button and move

Evaluation Copy. Do not reproduce. For information visit www.cadcim.com

the cursor up or down to define the height of the cone. Next, click to get the desired height. Move the cursor up or down again and click to define radius 2 of the cone; a cone will be created, as shown in Figure 2-33.

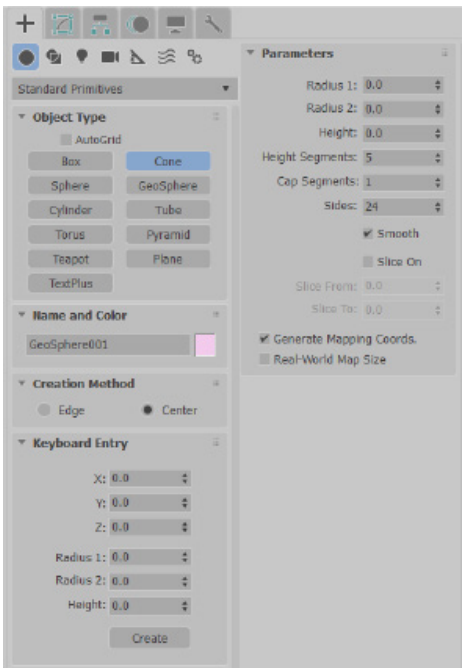

Figure 2-32 *Various rollouts to create a cone*

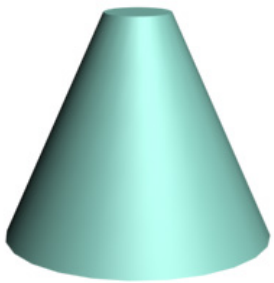

Figure 2-33 *A cone displayed in the viewport*

Various rollouts used to create and modify the cone are discussed next.

Creation Method Rollout

The options in this rollout are the same as those discussed in the **Sphere** tool.

Parameters Rollout

The **Radius 1** and **Radius 2** parameters are used to create pointed or flat-topped cones by specifying the first and second radii for the cone. The **Height** spinner is used to specify the height of the cone. If you specify a negative value for the **Height** spinner, the cone will be created below the construction plane.

Creating a Tube

Menu bar:	Create > Standard Primitives > Tube
Command Panel:	Create > Geometry > Standard Primitives > Object Type rollout > Tube

The **Tube** tool is used to create round and prismatic tubes. The tube primitive is similar to the cylinder primitives with a hole in it. To create a tube, activate the required viewport and choose

Evaluation Copy. Do not reproduce. For information visit www.cadcim.com

the **Tube** tool from the **Object Type** rollout; the **Name and Color**, **Creation Method**, **Keyboard Entry**, and **Parameters** rollouts will be displayed, as shown in Figure 2-34.

Press and hold the left mouse button to specify the center of the tube and then drag the cursor to define the first radius of the tube. It can be the inner or the outer radius of the tube. Next, release the left mouse button, move the cursor, and then click to define the second radius. Next, move the cursor up or down and click to get the desired height of the tube; a tube will be created, as shown in Figure 2-35.

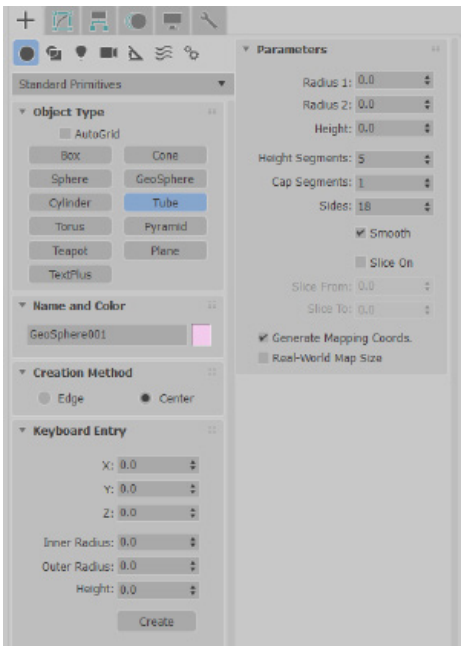

Figure 2-34 *Various rollouts to create a tube*

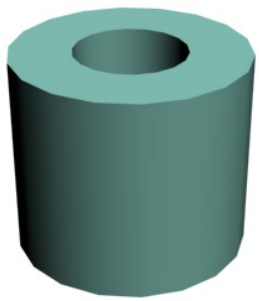

Figure 2-35 *A tube displayed in the viewport*

Various rollouts used to create and modify the tube are discussed next.

Creation Method Rollout

The options in this rollout are the same as those discussed in the **Sphere** tool.

Parameters Rollout

The options in this rollout are used to modify the tube. The **Radius 1** and **Radius 2** spinners are used to specify the inner and outer radii of the tube. The larger value represents the outer radius while the smaller value represents the inner radius. The **Height** spinner is used to specify the height of the tube. If you specify negative value for this parameter, the tube will be created below the construction plane. The other options in this rollout are the same as those described in the **Cylinder** tool.

Evaluation Copy. Do not reproduce. For information visit www.cadcim.com

Creating a Torus

Menu bar:	Create > Standard Primitives > Torus
Command Panel:	Create > Geometry > Standard Primitives > Object Type rollout > Torus

The **Torus** tool is used to create doughnut like shapes. To create a torus, activate the required viewport and choose the **Torus** tool from the **Object Type** rollout; the **Name and Color**, **Creation Method**, **Keyboard Entry**, and **Parameters** rollouts will be displayed, as shown in Figure 2-36. Press and hold the left mouse button to specify the center of the torus and then drag the cursor to define the radius of the torus. Release the left mouse button and then drag the cursor to adjust the radius of the circular cross-section of the torus. Click to get the desired radius; a torus will be created, as shown in Figure 2-37.

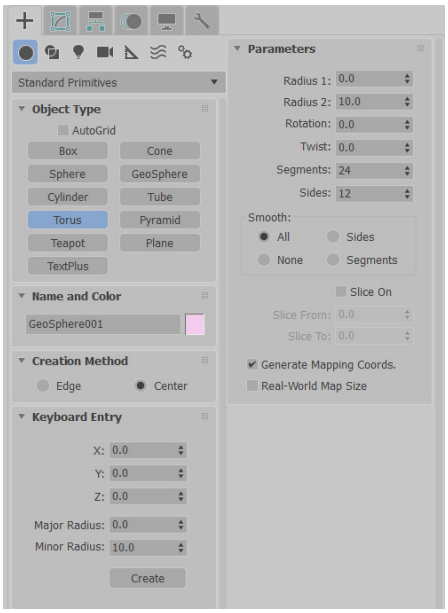

Figure 2-36 *Various rollouts to create a torus*

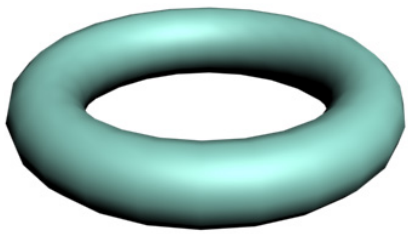

Figure 2-37 *A torus displayed in the viewport*

Various rollouts used to create and modify the torus are discussed next.

Creation Method Rollout

The options in this rollout are the same as those discussed in the **Sphere** tool.

Parameters Rollout

The options in this rollout are used to modify the torus. The **Radius 1** spinner is used to specify the radius for the ring of the torus. Therefore, you can specify the distance from the center of the torus to the center of the cross-sectional circle in this spinner. By default, the value of the **Radius 2** spinner is set to 10. This spinner specifies the radius of the cross-sectional circle. The value in the **Rotation** spinner defines the degree of rotation of the circular cross-section of the torus. The value in the **Twist** spinner specifies how much the circular cross-section of the torus can be twisted. The **Segments** spinner defines the number of segments around the circumference

Evaluation Copy. Do not reproduce. For information visit www.cadcim.com

of the torus. The **Sides** value specifies the number of sides in the circular cross-section of the torus. In the **Smooth** area of the **Parameters** rollout, there are four radio buttons. By default, the **All** radio button is selected. As a result, smoothness is applied to all surfaces of the torus. You can select the **Sides** radio button to apply smoothness between adjacent segments. If you select the **Segments** radio button, smoothness is applied to the segments individually. It results in the formation of ring-like segments along the torus. Select the **None** radio button, if you do not want to apply smoothness to the torus. The function of the **Slice On** check box is the same as described for the **Sphere** tool.

Creating a Pyramid

Menu bar:	Create > Standard Primitives > Pyramid
Command Panel:	Create > Geometry > Standard Primitives > Object Type rollout > Pyramid

To create a pyramid, activate the viewport and choose the **Pyramid** tool from the **Object Type** rollout; the **Name and Color**, **Creation Method**, **Keyboard Entry**, and **Parameters** rollouts will be displayed, as shown in Figure 2-38.

Press and hold the left mouse button to specify the first corner of the pyramid and then drag the cursor to define the width and depth of the pyramid. Release the left mouse button and drag the cursor upward. Click after you get the desired height; a pyramid will be created, as shown in Figure 2-39.

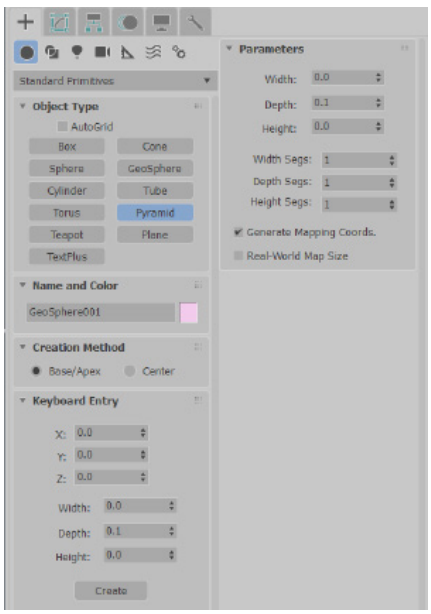

Figure 2-38 *Various rollouts to create a pyramid*



Figure 2-39 *A pyramid displayed in the viewport*

Various rollouts used to create and modify the pyramid are discussed next.

Evaluation Copy. Do not reproduce. For information visit www.cadcim.com

Creation Method Rollout

The options in this rollout are used for creating a pyramid dynamically. By default, the **Base/Apex** radio button is selected. As a result, the first point is specified as the first corner of the base of the pyramid. You can select the **Center** radio button to specify the first point as the center of the base of the pyramid.

Parameters Rollout

The options in this rollout are used to modify the pyramid. The **Width**, **Depth**, and **Height** spinners are used to specify the width, depth, and height of the pyramid, respectively. The values in the **Width Segs**, **Depth Segs**, and **Height Segs** spinners define the number of segments on the corresponding sides of the pyramid.

Creating a Plane

Menu bar:	Create > Standard Primitives > Plane
Command Panel:	Create > Geometry > Standard Primitives > Object Type rollout > Plane

To create a plane, activate the required viewport and then choose the **Plane** tool from the **Object Type** rollout; the **Name and Color**, **Creation Method**, **Keyboard Entry**, and **Parameters** rollouts will be displayed. Press and hold the left mouse button to specify the first corner of the plane and then drag the cursor to define the length and width of the plane. Release the left mouse button; a plane will be created, as shown in Figure 2-40.

Various rollouts used to create and modify the plane are discussed next.

Creation Method Rollout

The options in this rollout are used for creating a plane dynamically. By default, the **Rectangle** radio button is selected. As a result, the first point is specified as the corner of a rectangular plane. You can select the **Square** radio button to specify the first point as the center of a square plane. Note that in the case of a square plane, the length and width of the plane will be equal.

Parameters Rollout

The options in this rollout are used to modify the plane. The **Length** and **Width** spinners are used to specify the length and width of the plane, respectively. The values in the **Length Segs** and **Width Segs** spinners define the number of segments along the length and width of the plane, respectively. The **Render Multipliers** area is used to set the multipliers for rendering. The **Scale** spinner is used to specify the value by which the length and width will be multiplied at rendering. The **Density** spinner is used to specify the value by which the number of segments along the length and width will be multiplied at rendering.

Creating a Teapot

Menu bar:	Create > Standard Primitives > Teapot
Command Panel:	Create > Geometry > Standard Primitives > Object Type rollout > Teapot

To create a teapot, activate the required viewport and choose the **Teapot** tool from the **Object Type** rollout; the **Name and Color**, **Creation Method**, **Keyboard Entry**, and **Parameters** rollouts

Evaluation Copy. Do not reproduce. For information visit www.cadcim.com

will be displayed. Press and hold the left mouse button to define the center of the bottom face and then drag the cursor to define the radius of the teapot. Release the left mouse button after you get the desired radius; a teapot will be created with the pivot point at the center of its base, as shown in Figure 2-41. Various rollouts used to create and modify the teapot are discussed next.



Figure 2-40 *A plane displayed in the viewport*



Figure 2-41 *A teapot displayed in the viewport*

Creation Method Rollout

The options in this rollout are the same as those discussed in the **Sphere** tool.

Parameters Rollout

The options in this rollout are used to modify the teapot. The **Radius** spinner is used to specify the overall size of the teapot. Therefore, it specifies the distance from the center of the teapot to the body parameter. The **Segments** spinner is used to specify the number of divisions in each quadrant of the body. By default, the **Smooth** check box is selected. Therefore, all parts of the teapot will be smoothened. A teapot has four parts: body, handle, spout, and lid. If you want to remove any one of the parts, clear the check box corresponding to that part in the **Teapot Parts** area of the **Parameters** rollout. You can also use different parts of a teapot individually to make another object. For example, you can use the handle of the teapot for creating a coffee mug.

Creating a TextPlus

Menu bar:	Create > Standard Primitives > TextPlus
Command Panel:	Create > Geometry > Standard Primitives > Object Type rollout > TextPlus

Textplus object is a text object which has a provision of extruding and beveling it without applying any modifier to it.

To create a textplus object, activate the required viewport and choose the **TextPlus** tool from the **Object Type** rollout; the **Name and Color**, **Interpolation**, **Layout**, **Parameters**, **Geometry**, and **Animation** rollouts will be displayed, as shown in Figure 2-42. Press and hold the left mouse button to specify the center of the textplus. Release the left mouse button; the textplus will be created, as shown in Figure 2-43. Most commonly used rollouts to create and modify the textplus are discussed next.

Evaluation Copy. Do not reproduce. For information visit www.cadcim.com

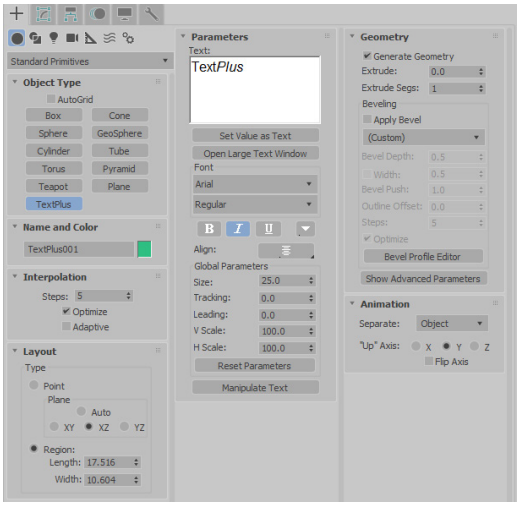

Figure 2-42 *Various rollouts to create a textplus*

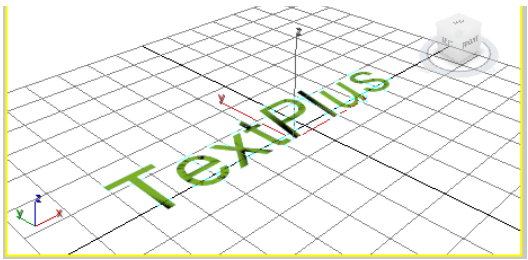

Figure 2-43 *A textplus displayed in the viewport*

Name and Color

This rollout is used to assign a name and color to the textplus object.

Interpolation Rollout

The value in the **Steps** spinner specifies the number of steps in the text. You need to increase the value in this spinner to achieve smoother text.

By default, the **Optimize** check box is selected. As a result, the unwanted steps on the straight line are removed. If you select the **Adaptive** check box, the **Steps** spinner will be deactivated and number of steps will be automatically set to create a smooth text.

Layout Rollout

In this rollout, the **Region** radio button is selected by default. As a result, region of textplus object is specified automatically when you drag the cursor in the viewport. The **Length** and **Width** spinners are used to specify the dimensions of the region.

If you select the **Point** radio button, you need to click at a point in the viewport to create a textplus object. The **Auto** radio button automatically specifies the axes along which the textplus object will be oriented. To orient the textplus object along specific axes, select the **XY**, **XZ**, or **YZ** radio button.

Parameters Rollout

TextPlus is displayed in the textbox located at the top in this rollout by default. To change the text, you need to overwrite it with the desired text in the textbox. To start a new line, press ENTER. When you choose the **Set Value as Text** button, the **Edit Value As Text** dialog box will be displayed. Using the options in this dialog box, you can insert values in the text from the script or expression. These values can be object parameters such as length, radius, position, and so on.

Evaluation Copy. Do not reproduce. For information visit www.cadcim.com

As the name suggests, the **Open Large Text Window** button is used to create large textboxes so that you can enter large text paragraphs.

The options in the **Font** area are used to set font type and text alignment. The options in the **Global Parameters** area are used to set text height, space between the letters of the text, space between the two lines, and set vertical and horizontal scaling of the text.

When you choose the **Reset Parameters** button, the **Reset Text** dialog box will be displayed. Select the options from this dialog box and choose **Reset** to reset them. The **Manipulate Text** button is used to manually manipulate the text uniformly or non-uniformly.

Geometry Rollout

The **Generate Geometry** check box is selected by default. If you clear this check box, textplus object is displayed as a text spline object. The **Extrude** and **Extrude Segs** spinners are used to specify the extrude settings of textplus object. The parameters in the **Beveling** area are used to specify the bevel settings of the textplus object. Choose the **Show Advanced Parameters** button to add the **Capping** and **Cap Type** areas in the rollout.

Animation Rollout

The options in this rollout are used to specify the parameter of the text to be animated and the axis of the orientation of the text object.

RENDERING A STILL IMAGE

Menu bar:	Rendering > Render
Toolbar:	Main Toolbar > Render Production
Keyboard:	SHIFT + Q

Rendering is a process of generating a 2D image from a 3D scene. It shows the lighting effects, materials applied, background, and other settings that you have applied to the scene. The basic rendering for a still scene is discussed next while the advance rendering for the animated scenes will be discussed in the later chapters.



Arnold Renderer

In 3ds Max 2025, Arnold 6.0 is the default renderer. Arnold for 3ds Max (MAXtoA) is a supporting interactive renderer. This renderer is run by Arnold plug-in, also known as MAXToA. It is a cross-platform rendering solution developed by Solid Angle. Arnold renderer is used by the prominent studios in the animation, broadcast, and gaming industries across the globe. You will learn more about this renderer in the later chapters.

To render a still image, activate the perspective viewport and choose the **Render Setup** tool from the **Main Toolbar**; the **Render Setup: Arnold** dialog box will be displayed, as shown in Figure 2-44(a). The **Common** tab is chosen by default in this dialog box. In the **Common Parameters** rollout, make sure that the **Single** radio button is selected in the **Time Output** area. This will enable you to render a single frame at a time. In the **Output Size** area, set the parameters or use the default ones and then choose the **Render** button at the upper right corner in the dialog box; the rendered image will be displayed in the **Perspective, frame 0, Display Gamma:2.2, RGBA Color32 Bits/Channel (1:1)** window, as shown in Figure 2-44 (b).

Evaluation Copy. Do not reproduce. For information visit www.cadcim.com

Here, **Perspective** refers to the name of the viewport that you had selected at the time of rendering and **frame 0** refers to the number of frame that has been rendered.

Note

1. In earlier versions of 3ds Max, Scanline renderer was the default renderer.

*2. To render a view quickly, choose the **Render Production** tool from the **Main Toolbar** or press the SHIFT+F9 keys or SHIFT+Q keys.*

*3. In 3ds Max, you can upload resources to Autodesk A360 cloud and render a scene using the A360 cloud rendering service. This service produces quality renderings in A360 cloud space in considerably less time and you can continue working on your computer even if the rendering is going on in A360 cloud space. To enable the A360 cloud rendering mode, choose the **Render Setup** tool from the **Main Toolbar**; the **Render Setup: Arnold** dialog box will be displayed. In this dialog box, select **A360 Cloud Rendering Mode** from the **Target** drop-down list.*

To save the rendered image, choose the **Save Image** button in the **Perspective, frame 0, Display Gamma:2.2, RGBA Color 32 Bits/Channel (1:1)** window; the **Save Image** dialog box will be displayed. Now, select the type of image format from the **Save as type** drop-down list and enter the name of the image in the **File name** text box. Next, browse to the folder where you want to save the scene and choose the **Save** button; a dialog box will be displayed. You can adjust the settings for the file format you have chosen in this dialog box. Use the default settings and choose the **OK** button; the image file will be saved at the selected location.

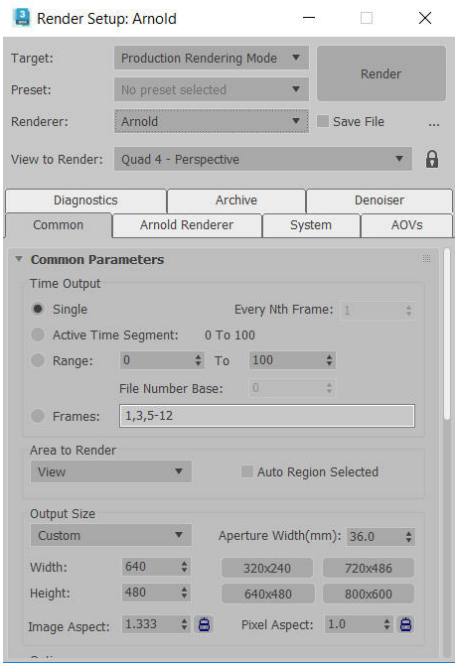

Figure 2-44 (a) *The partial view of the **Render Setup: Arnold** dialog box*

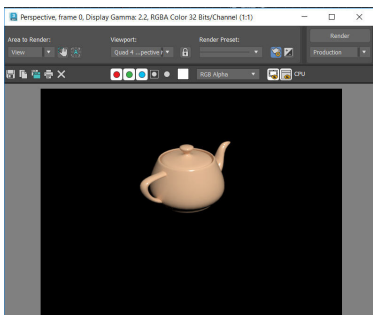

Figure 2-44 (b) *The **Perspective, frame 0, Display Gamma 2.2,RGBA Color16 Bits/Channel (1:1)** window*

Evaluation Copy. Do not reproduce. For information visit www.cadcim.com



Note

In the later chapters, the ***Perspective, frame 0, Display Gamma:2.2, RGBA Color32 Bits/Channel (1:1)*** *window is referred to as the* ***Rendered Frame*** *window.*

Quicksilver Hardware Renderer

By default, a 3ds Max scene is rendered using the Scanline renderer. However, if you choose the Quicksilver hardware renderer, you can achieve various rendering styles such as wireframe rendering, clay rendering, non-photorealistic rendering, and so on. To do so, you need to follow the steps given next.

1. Activate any of the viewport and choose the **Render Setup** tool from the **Main Toolbar**; the **Render Setup: Scanline Renderer** dialog box will be displayed. The **Common** tab is chosen by default in this dialog box.

2. Select the **Quicksilver Hardware Renderer** option from the **Renderer** drop-down list. Alternatively, collapse the **Common Parameters** rollout in this tab and expand the **Assign Renderer** rollout. In this rollout, choose the **Choose Renderer** button at the right of the **Production** text box; the **Choose Renderer** dialog box will be displayed. Select the **Quicksilver Hardware Renderer** option and choose the **OK** button to exit the **Choose Renderer** dialog box. Notice the change in the **Render Setup** dialog box.

3. Choose the **Renderer** tab; various rollouts will be displayed, refer to Figure 2-45. In the **Visual Style** area of the **Visual Style & Appearance** rollout, various options are available in the **Rendering Level** drop-down list, as shown in Figure 2-46.

4. To change the rendering style, you can select the required option from the **Rendering Level** drop down list. Next, choose the **Render** button at the upper right corner of the dialog box; the rendered image will be displayed as per the option selected in the drop-down list.

ART Renderer

The Autodesk Raytracer (ART) renderer is used to create the photo-real images and videos. The ART renderer is used for scenes lit with image-based lighting (IBL). This renderer is used for exterior scene, architectural interiors with daylight, and product renders with HDR studio lighting images.

This renderer also includes an image noise filter that can reduce rendering time, and improve the quality of the rendering. When you change the current renderer to the ART renderer using the **Render Setup** dialog box, the **Rendering Parameters** and **Filtering** rollouts will be displayed in the **ART Renderer** tab of the **Render Setup: Art Renderer** dialog box.

Evaluation Copy. Do not reproduce. For information visit www.cadcim.com

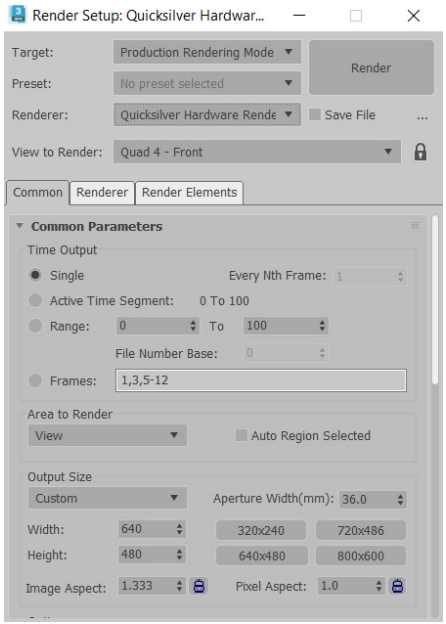

Figure 2-45 The partial view of ***Render Setup: Quicksilver Hardware Renderer*** *dialog box*

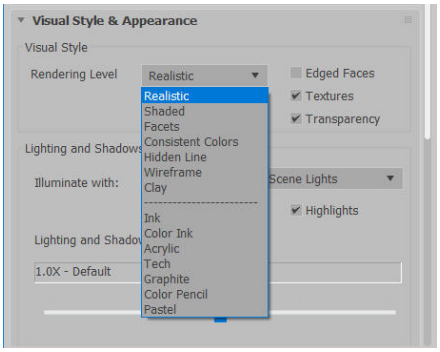

Figure 2-46 The ***Rendering Level*** *drop-down list*

Scanline Renderer

A Scanline renderer renders a scene as a series of scanlines generated from top to bottom. It is a production renderer. Note that the images rendered by production renderers display a rendered frame window with its own controls.

In Scanline rendering, surfaces cannot contribute reflected light to a scene as the scanline renderer calculates only direct light. To light a scene in a realistic way, you need additional lighting to simulate the subtle effects of bounced light.

Changing the Background Color

Menu bar: Rendering > Environment
Keyboard: 8

By default, the background color of the final output is black at the time of rendering. To change the background color, choose **Rendering > Environment** from the menu bar; the **Environment and Effects** dialog box will be displayed, as shown in Figure 2-47.

In this dialog box, the **Environment** tab is chosen by default. The **Common Parameters**, **Exposure Control**, and **Atmosphere** rollouts will be displayed under this tab. In the **Common Parameters** rollout, the **Background** area is used to change the background color of the scene on rendering.

In the **Background** area, choose the color swatch corresponding to the **Color** parameter; the **Color Selector: Background Color** dialog box will be displayed. Select a new color and choose

Evaluation Copy. Do not reproduce. For information visit www.cadcim.com

the **OK** button. Next, close the **Environment and Effects** dialog box; the background will display the new color on rendering.

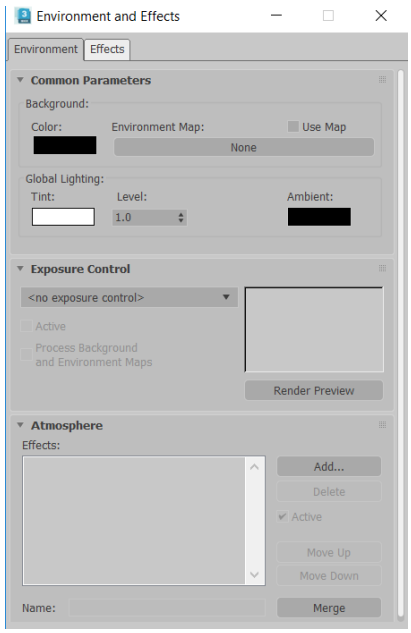

***Figure 2-47** The **Environment and Effects** dialog box*

Creating the Project Folder

Project folder helps the user to keep all the files organized for a particular project. In 3ds Max, various options are available to create a project folder. To create a project folder, choose **File > Project** from the menubar; a cascading menu will be displayed. The options in this cascading menu are discussed next.

The first option in this menu displays the path of the current project. Choose the **Recent Projects** option to display last 10 projects. When you choose the **Set Active Project** option, a dialog box will be displayed. Using this dialog box, you need to choose a folder that will act as a root folder of the current project. The **Create Empty** option is used to create an empty project folder. The **Create Default** option is used to create a project folder with default folders in it. The **Create from Current** option creates a project folder that is based on the folder structure of the current project.

TUTORIALS

Tutorial 1

In this tutorial, you will create 3D model of a coffee table and two chairs, as shown in Figure 2-48, by using the standard primitives. **(Expected time: 30 min)**

Evaluation Copy. Do not reproduce. For information visit www.cadcim.com



Figure 2-48 *The model of coffee table and chairs*

The following steps are required to complete this tutorial:

a. Create the project folder.
b. Create top of the coffee table.
c. Create legs of the coffee table.
d. Create base of the coffee table.
e. Create chairs.
f. Change background color of the scene.
g. Save and render the scene.

Creating the Project Folder

Before starting a new scene, it is recommended that you create a project folder. Creating a project folder helps you keep all the files of a project in an organized manner. Open the Windows Explorer and browse to the *Documents* folder. In this folder, create a new folder with the name *3dsmax2025*. The *3dsmax2025* folder will be the main folder and it will contain all the project folders that you will create while doing tutorials of this textbook. Now, you will create first project folder for Tutorial 1 of this chapter. To do so, you need to follow the steps given next:

1. Start Autodesk 3ds Max 2025.

2. If 3ds Max is already running, you need to reset it. To do so, choose **Reset** from the **File** menu. If the current work is not saved, the **Autodesk 3ds Max 2025** message box is displayed. Next, choose the desired option from this message box; the **3ds Max** message box is displayed. Choose the **Yes** button from the message box; a new screen is displayed with default settings.



Note

*The **Reset** option is used to reset 3ds Max settings such as viewport configuration, snap settings, the **Material Editor** dialog box, background image, and so on. It also restores the startup defaults.*

3. Create a new folder with the name *c02_tut1 at \Documents\3dsmax2025*. Next, choose **File > Project> Create Default** from the menubar; the **Choose a folder** dialog box is displayed.

4. Navigate to *\Documents\3dsmax2025*. Next, select the **c02_tut1** folder and then choose **Select Folder** button to close the **Choose a folder** dialog box; the *c02_tut1* folder is created.

Evaluation Copy. Do not reproduce. For information visit www.cadcim.com

5. Choose **Save** from the **File** menu; the **Save File As** dialog box is displayed.



Note

*The scenes created in 3ds Max are saved with the .max extension. As the project folder is already created, the path \Documents\3dsmax2025\c02_tut1\scenes is displayed in the **Save in** drop-down list of the **Save File As** dialog box.*



Tip

*After setting the project when you open or save a scene, 3ds Max uses the **scenes** folder inside the project folder by default.*

6. Enter **c02tut1** in the **File name** edit box and then choose the **Save** button to close the dialog box.



Note

1. *When you start 3ds Max, the last project that you have worked with is opened and an empty scene is created with the name **Untitled**.*

2. *You can also save a scene in old versions (2016 to 2021) of 3ds Max. To do so, select the desired option from the **Save as type** drop-down in the **Save File As** dialog box.*

3. *It is recommended that you frequently save the files while you are working on them by pressing the CTRL+S keys.*

Autodesk 3ds Max creates a backup of the scene and saves changes periodically. In case of system failure, you can open the auto backup scene file and continue working on it. If you have not created the project folder on Windows 7, the default path to save the auto backup file is as follows: *C:\users\<username>\My Documents\3dsmax\autoback*. However, if you have created the project folder, the backup file will be saved in the *autoback* subfolder of the project folder. When 3ds Max is saving a file, the information, "**Autosave in progress... (Press ESC to cancel)**" is displayed in the prompt line at the bottom of the interface. If the size of the file is too large and it is taking time to save, you can press ESC to interrupt the saving process. You can also set the number of autoback files, their names, and backup time interval. To do so, choose **Customize > Preferences** from the menu bar; the **Preferences Settings** dialog box will be displayed. Next, choose the **Files** tab and then set the options as required in the **Auto Backup** area of dialog box.

Creating Top of the Coffee Table

In this section, you will create the top of the coffee table using the **Cylinder** tool and the **Tube** tool.

1. Choose **Create > Geometry** from the **Command Panel**; **Standard Primitives** is displayed in the drop-down list below the **Geometry** button. Also, the **Object Type** rollout is displayed in the **Command Panel**. Next, choose the **Tube** tool from the **Object Type** rollout.

2. Activate the Top viewport. Expand the **Keyboard Entry** rollout from the **Command Panel**. and enter the values in this rollout, as given next.

Inner Radius : **60** Outer Radius : **80** Height: **4.2**

Evaluation Copy. Do not reproduce. For information visit www.cadcim.com

Choose the **Create** button; a tube with the name *Tube001* is created in the viewports.

3. In the **Parameters** rollout, enter **48** in the **Sides** spinner; *Tube001* is displayed in the viewports, as shown in Figure 2-49.

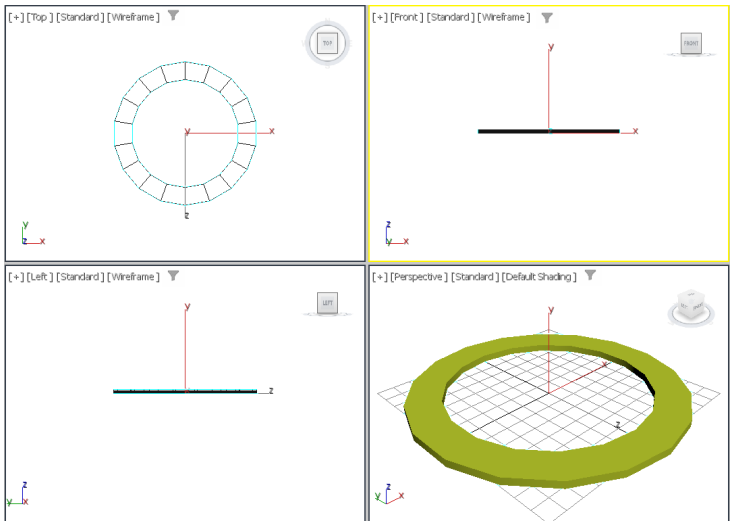

Figure 2-49 *The Tube001 displayed in viewports*

4. Choose the color swatch in the **Name and Color** rollout to change the color of *Tube001*; the **Object Color** dialog box is displayed. Now, using this dialog box, modify the color of *Tube001* to light brown.

5. Create another tube in the Top viewport by using the method described earlier. Enter the following values in the **Keyboard Entry** rollout:

Z: **-0.5** Inner Radius : **60** Outer Radius : **40**
Height: **4.2**

Tube002 is displayed in the viewports, refer to Figure 2-50. In the **Parameters** rollout, make sure the **Sides** spinner is set to **48**. Also, change the color of *Tube002* to light brown.

6. Make sure the Top viewport is active and then choose the **Cylinder** tool from the **Object Type** rollout. Next, expand the **Keyboard Entry** rollout and enter the values as given next:

Radius: **40** Height: **4.2**

Evaluation Copy. Do not reproduce. For information visit www.cadcim.com

Choose the **Create** button; a cylinder is created in the viewports with the name *Cylinder001*, refer to Figure 2-51.

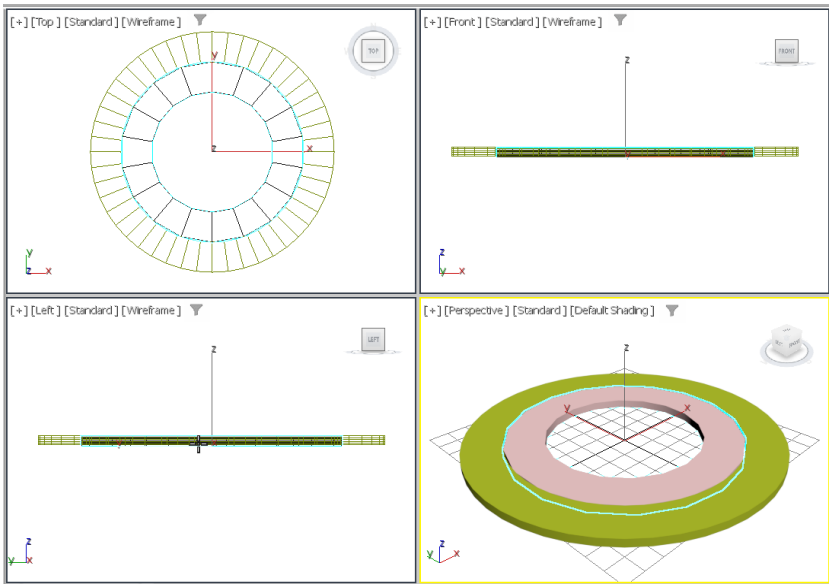

Figure 2-50 *The Tube002 displayed in viewports*

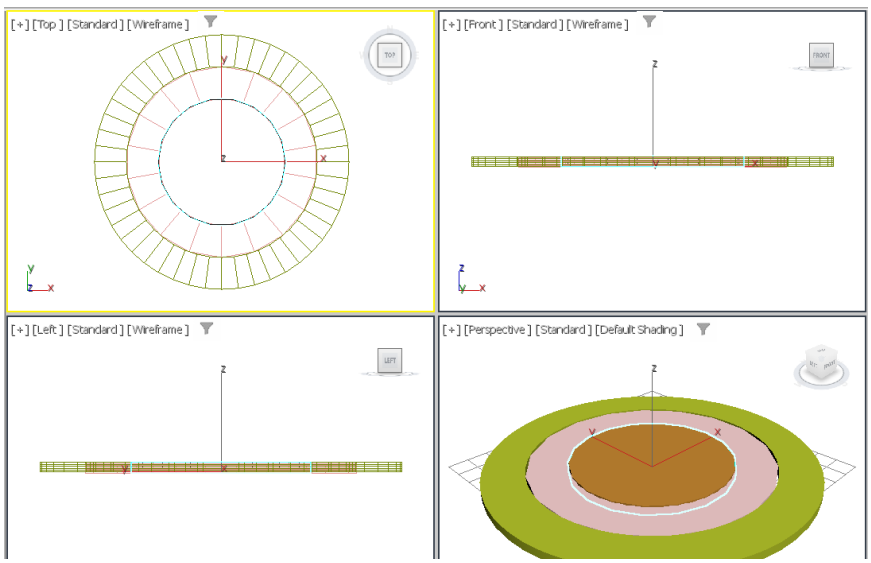

Figure 2-51 *The Cylinder001 displayed in the viewports*

7. In the **Parameters** rollout, enter **48** in the **Sides** spinner. Also, change the color of *Cylinder001* to light brown.

Evaluation Copy. Do not reproduce. For information visit www.cadcim.com

8. Select *Tube001*, *Tube002*, and *Cylinder001* from the Scene Explorer and right-click; a quad menu is displayed. Choose **Add Selected To > New Group** from it; the **Group** dialog box is displayed. Enter **top** in this dialog box and choose **OK**; the *top* group is created with 3 objects in it.

Creating the Legs of the Coffee Table

In this section, you will create a leg of the table using the **Cylinder** tool and then clone it to create remaining legs.

1. Create cylinder in the Top viewport and enter the following values in the **Parameters** rollout:

   Radius: **5** Height: **150**

2. In the **Name and Color** rollout, enter **leg001** and press ENTER; the object is renamed. Next, change the color of *leg001* to light brown.

3. Align *leg001* with *Tube001* in viewports using the **Select and Move** tool, as shown in Figure 2-52.

   Next, you will create copies of *leg001*.

4. Activate the Top viewport and make sure *leg001* is selected. Next, move the cursor over the Y axis, press and hold the SHIFT key, and drag *leg001*.

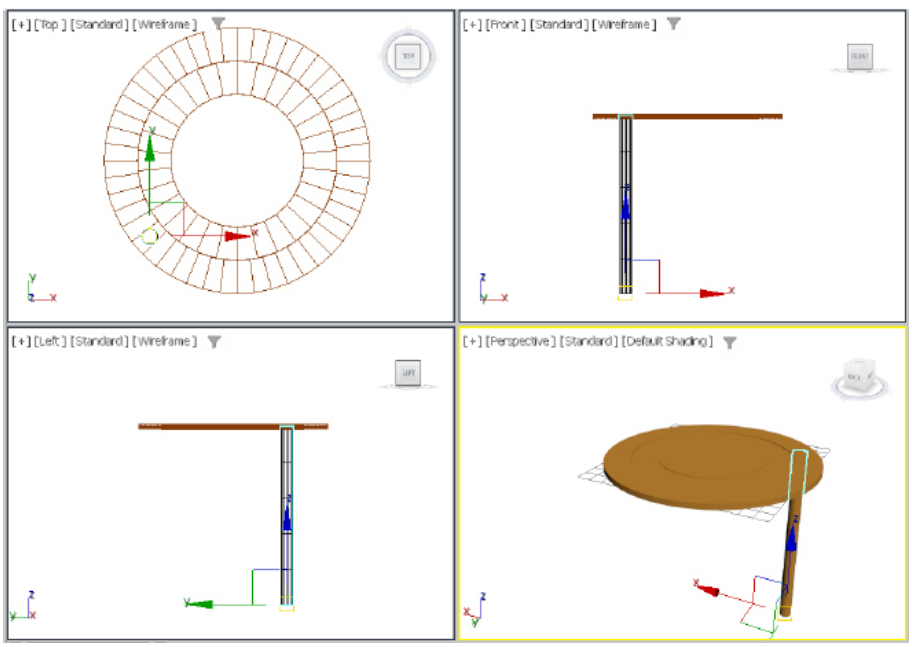

Figure 2-52 *The leg001 aligned in viewports*

Evaluation Copy. Do not reproduce. For information visit www.cadcim.com

Now, release the left mouse button and the SHIFT key; the **Clone Options** dialog box is displayed, as shown in Figure 2-53.

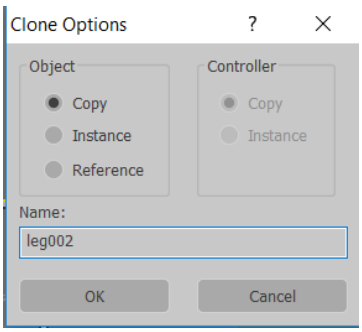

Figure 2-53 *The* ***Clone Options*** *dialog box*

5. Make sure the **Copy** radio button is selected in the **Object** area and 1 is displayed in the **Number of Copies** spinner of the **Clone Options** dialog box. Next, choose the **OK** button; *leg002* is created. Align *leg002* in the viewports, as shown in Figure 2-54.

Note

1. The cloned objects when created, if are not named, get automatically named in a sequence starting from the original object.

2. You can also clone an object by holding the SHIFT key while rotating or scaling it.

6. Select *leg001* and *leg002* from the Scene Explorer. In the Top viewport, move the cursor over the X axis, press and hold the SHIFT key, and drag *leg001* and *leg002* toward right until the value in the **X** spinner of the Coordinate display at the bottom of the screen becomes around **106**. Release the left mouse button and the SHIFT key; the **Clone Options** dialog box is displayed.

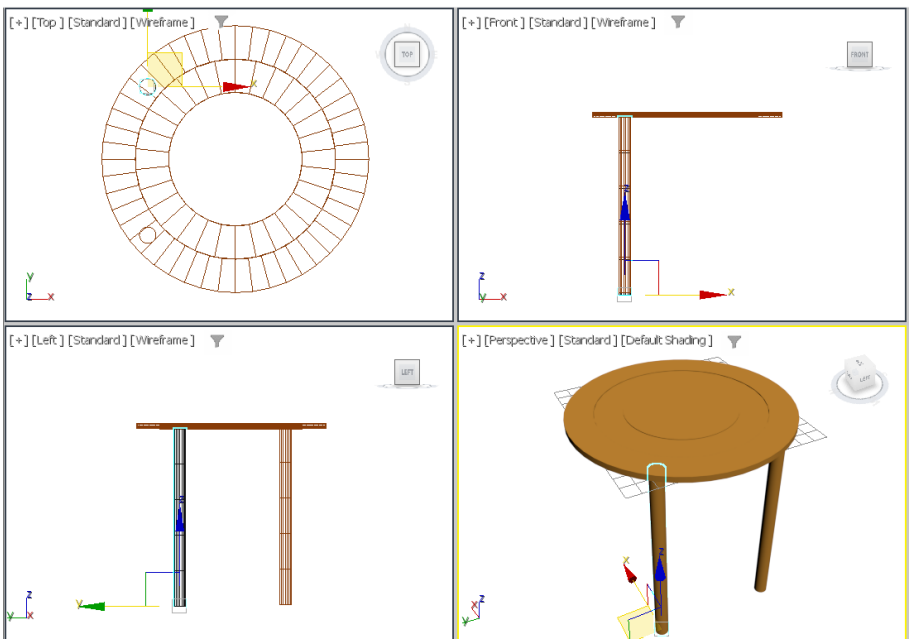

Figure 2-54 *The leg002 created after cloning leg001*

7. Make sure the **Copy** radio button is selected in the **Object** area and 1 is displayed in the **Number of Copies** spinner of the **Clone Options** dialog box. Next, choose the **OK** button; *leg003* and *leg004* are created, refer to Figure 2-55.

Evaluation Copy. Do not reproduce. For information visit www.cadcim.com

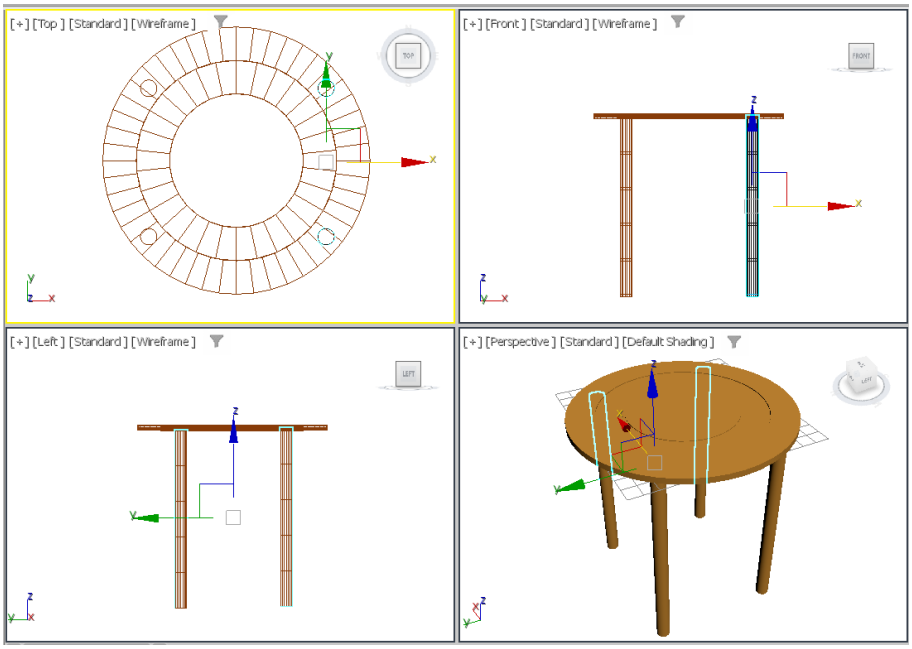

Figure 2-55 *The leg003 and leg004 created*

8. Select *leg001*, *leg002*, *leg003*, and *leg004* from the Scene Explorer and group them under the name *legs* as discussed earlier.

Note

If you want to precisely place the legs, you can use the ***Array*** *tool. Select leg001 and then place its pivot point at the center of the grid (0, 0, and 0) using the* ***Hierarchy*** *panel. Now, make sure leg001 is selected and then choose* ***Array*** *from the* ***Tools*** *menu to open the* ***Array*** *dialog box. In this dialog box, select* ***Copy*** *from the* ***Type of Object*** *rollout, enter* ***3*** *in the spinner associated with the* ***1D*** *parameter, and then enter* ***120*** *(360 degrees/3) in the* ***Z*** *spinner associated with the* ***Rotate*** *row. Now, choose the* ***OK*** *button to create 3 copies of the leg001.*

Creating Base of the Coffee Table

In this section, you will create base of the table by using the **Cylinder** tool.

1. Make sure the Top viewport is activated and then choose the **Cylinder** tool from the **Object Type** rollout. Next, expand the **Keyboard Entry** rollout and enter the values as given next:

   Z: **-125** Radius: **60** Height: **4.2**

   Choose the **Create** button; a cylinder is created in the viewports with the name *Cylinder002*.

2. Rename it as *base01* and assign light brown color to it, refer to Figure 2-56.

Evaluation Copy. Do not reproduce. For information visit www.cadcim.com

Next, you will create supports for *base01*.

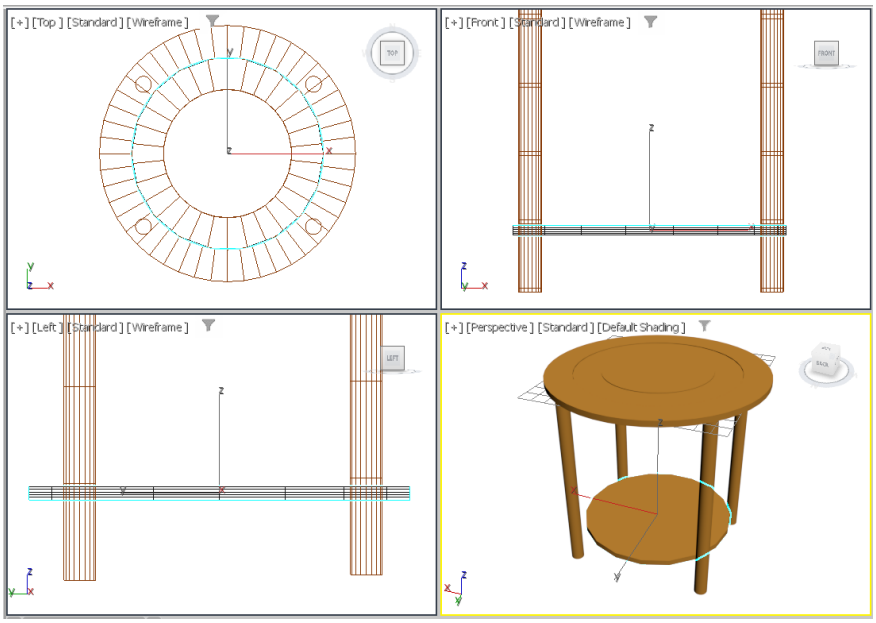

Figure 2-56 *The base01 created*

3. Activate the Front viewport. Next, choose the **Cylinder** tool from the **Object Type** rollout.

4. Expand the **Keyboard Entry** rollout and enter the values as given next:

   Radius: **4** Height: **140**

   Choose the **Create** button; a cylinder is created in the viewports with the name *Cylinder002*. Make sure the X, Y, and Z spinners in the **Keyboard Entry** rollout are set to 0.

5. In the **Name and Color** rollout, enter **support01** and press ENTER; the cylinder is named as *support01*. Also, change the color of *support01* to light brown.

6. Align *support01* using the **Select and Move** and **Select and Rotate** tools from the **Main Toolbar**, as shown in Figure 2-57.

7. In the Top viewport, copy *support01* by using the **Clone Options** dialog box as described earlier; *support002* is created. Now, align it with *base01* using the **Select and Move** and **Select and Rotate** tools, refer to Figure 2-58.

8. Select *base01*, *support01*, and *support002* from the Scene Explorer and group them under the name *base* as discussed earlier.

9. Select *base*, *top*, and *legs* groups from the Scene Explorer and group them under the name *table* as discussed earlier.

Evaluation Copy. Do not reproduce. For information visit www.cadcim.com

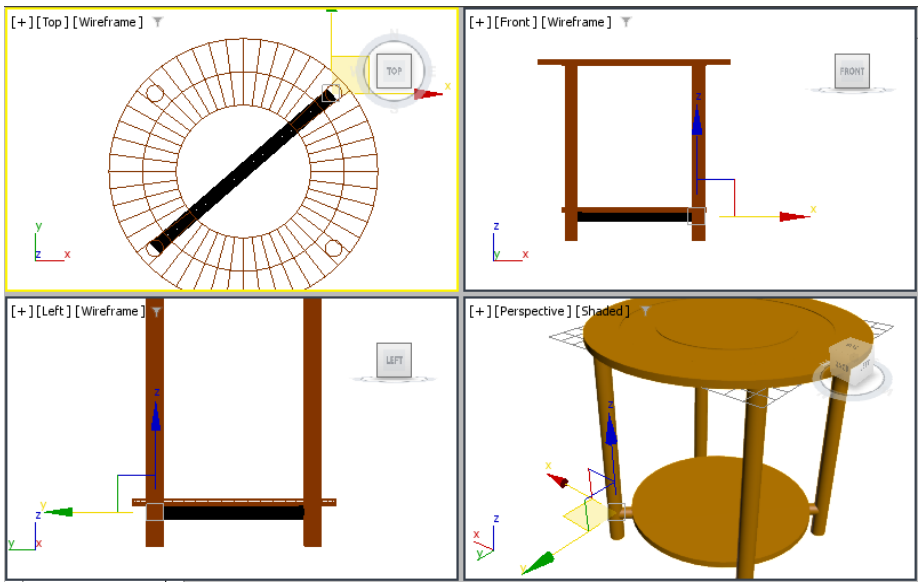

Figure 2-57 *Alignment of support01 in viewports*

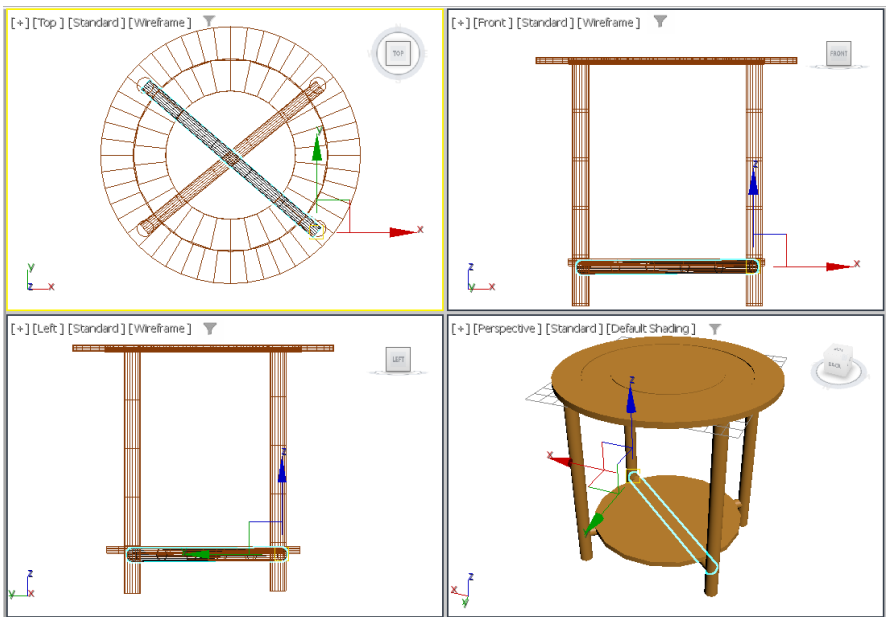

Figure 2-58 *Alignment of support002 with base01*

Creating Chair

In this section, you will create chair using the **Box** tool.

1. Select *table* from the Scene Explorer and right-click; a quad menu is displayed. Choose **Hide Selection** from it; *table* is hidden.

Evaluation Copy. Do not reproduce. For information visit www.cadcim.com

2. Activate the Top viewport. Next, choose the **Box** tool from the **Object Type** rollout and create a box. Now, choose the **Modify** tab from the **Command Panel**.

3. Rename the box as *base*. In the **Parameters** rollout, enter the values as given next:

   Length: **60** Width: **58** Height: **5**

   Next, you will create legs of the chair.

4. Repeat step 2 to create one more box. In the **Parameters** rollout, enter the values as given next:

   Length: **5** Width: **5** Height: **55**

5. Rename the box as *leg01*. Next, align *leg01* with *base,* as shown in Figure 2-59.

6. Create 3 copies of *leg01* as discussed earlier and align them, as shown in Figure 2-60.

7. Select all the legs from the Scene Explorer and group them with the name *legs*.

   Next, you will create back of the chair.

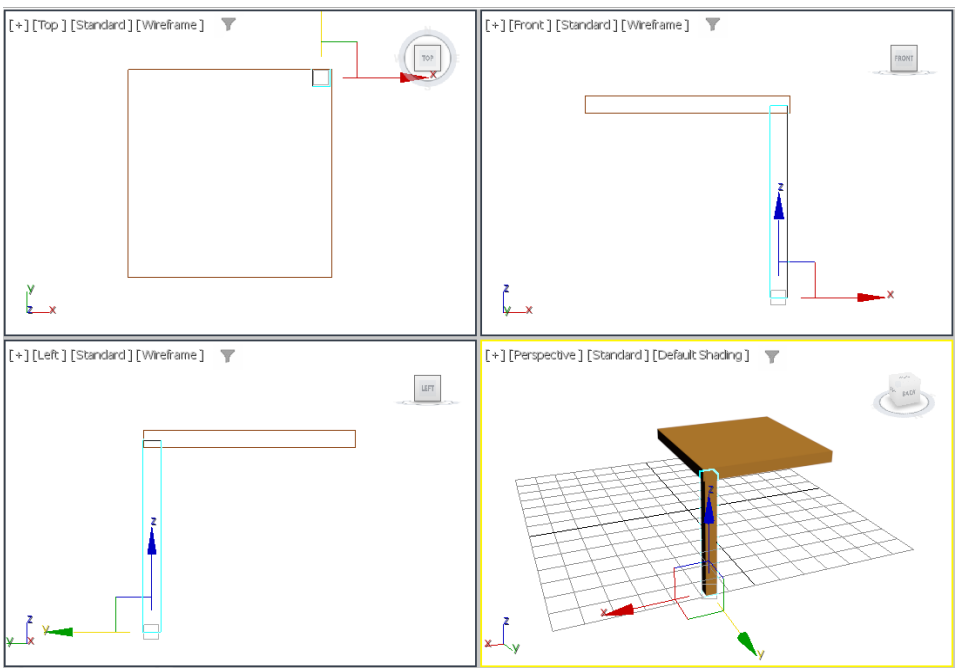

Figure 2-59 *Alignment of leg01 with base*

8. Activate the Front viewport. Next, choose the **Box** tool from the **Object Type** rollout and create a box. Now, choose the **Modify** tab from the **Command Panel**.

Evaluation Copy. Do not reproduce. For information visit www.cadcim.com

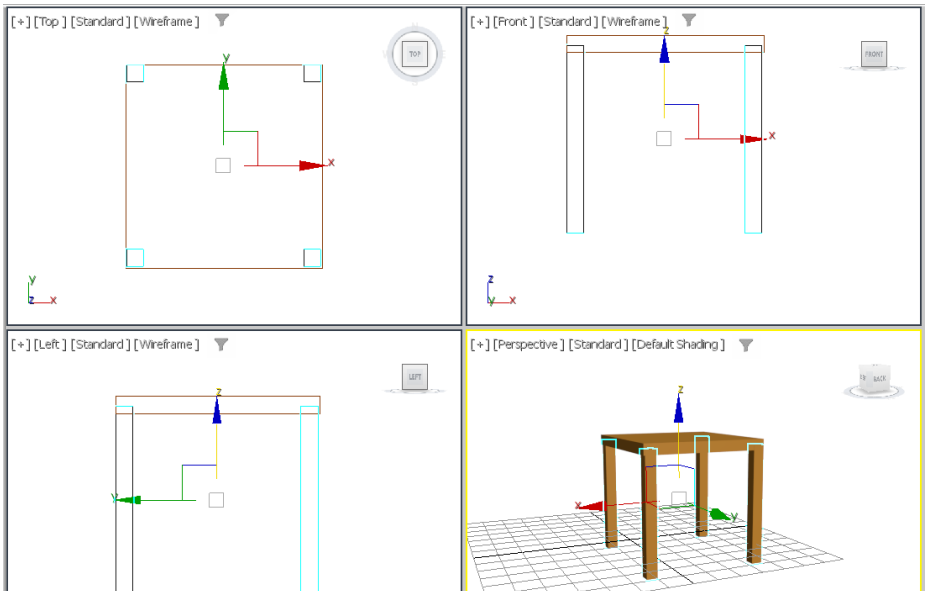

Figure 2-60 *Alignment of legs with base*

9. In the **Parameters** rollout, enter the values as given next:

   Length : **9.5** Width : **65** Height : **3.5**

10. Rename the created object as *back1*. Next, align it with *base*, refer to Figure 2-61.

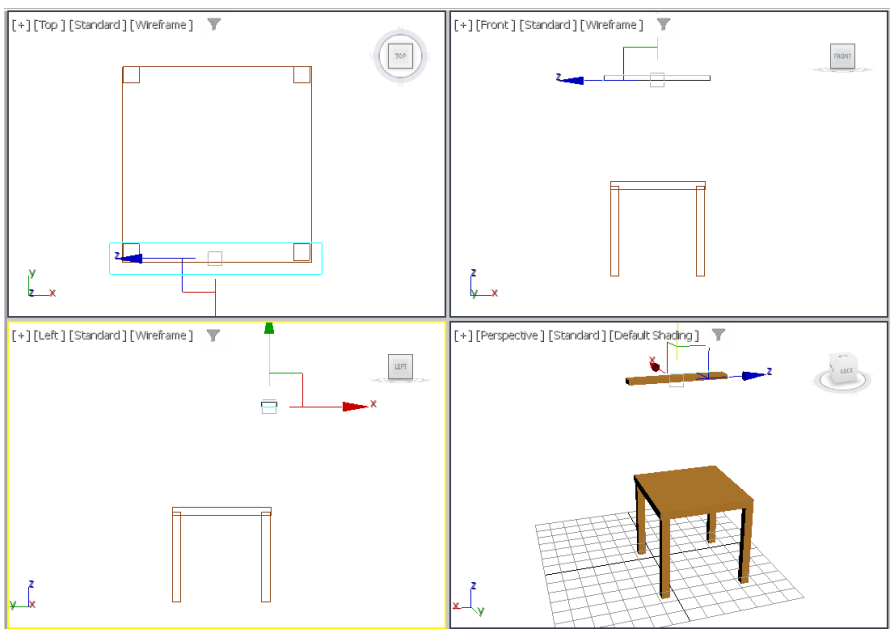

Figure 2-61 *Alignment of back1 with base*

Evaluation Copy. Do not reproduce. For information visit www.cadcim.com

Note that you may need to adjust the position of *back1* at the time of alignment of objects in step 14.

11. Repeat step 8 to create one more box.

12. In the **Parameters** rollout, enter the values as given next:

Length : **62** Width : **5.5** Height: **3.5**

13. Rename it as *back2*. Next, create 4 copies of *back2* and align them with *base* using the **Select and Move** and **Select and Rotate** tools, refer to Figure 2-62. Also, align *back1* with all these parts, as shown in Figure 2-62.

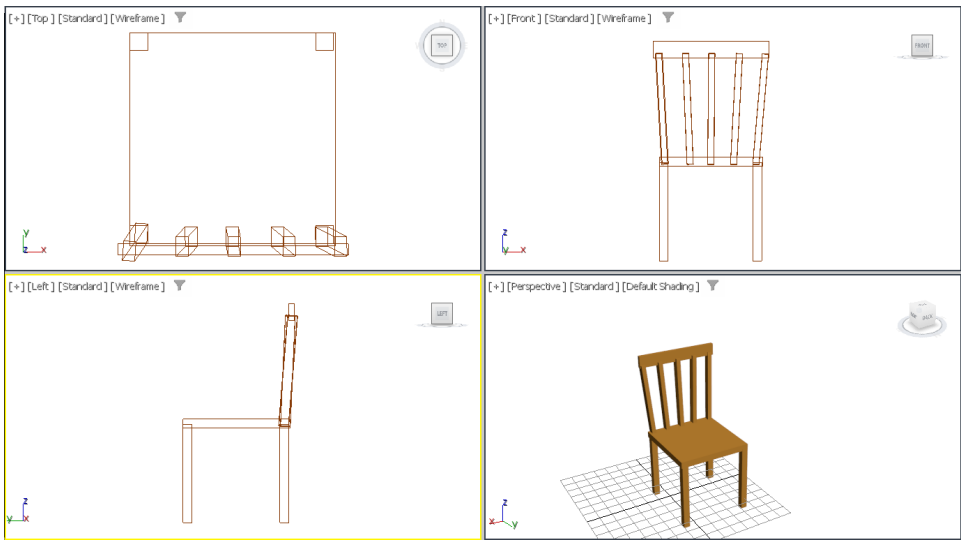

Figure 2-62 *Alignment of back2 and its copies*

14. Select *back1*, *back2*, *back3*, *back004*, *back005* and *back006* from the Scene Explorer and group them under the name *back* as discussed earlier.

Next, you will create handrests for the chair.

15. Create a box in the Top viewport and enter the values in the **Parameters** rollout, as given next:

Length: **45** Width: **5.2** Height: **2**

Align it with *back2*, as shown in Figure 2-63.

Evaluation Copy. Do not reproduce. For information visit www.cadcim.com

16. Create one more box in the Top viewport and enter the values in the **Parameters** rollout, as given next (adjust the dimensions if required) and then align it with the box created in step 16, as shown in Figure 2-64.

Length: **25** Width: **5.2** Height: **2**

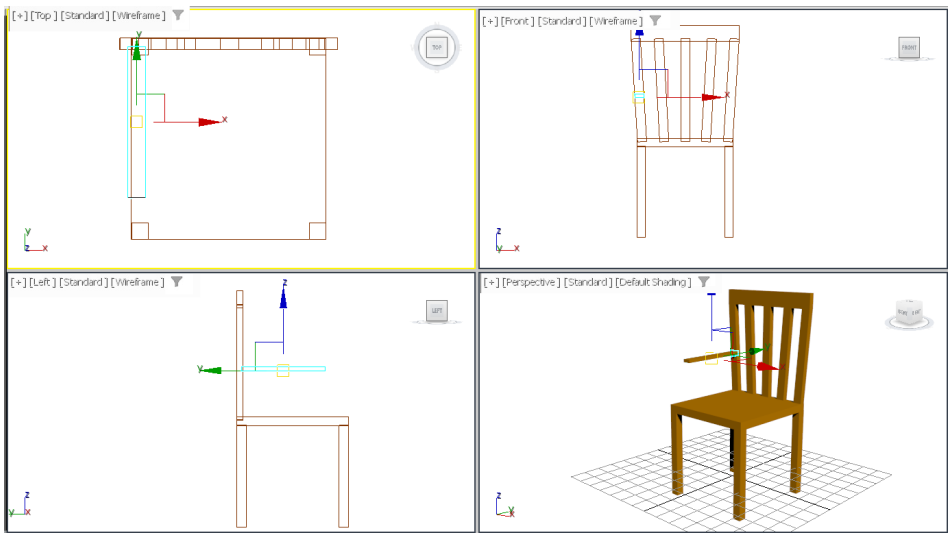

Figure 2-63 *Alignment of box with back2*

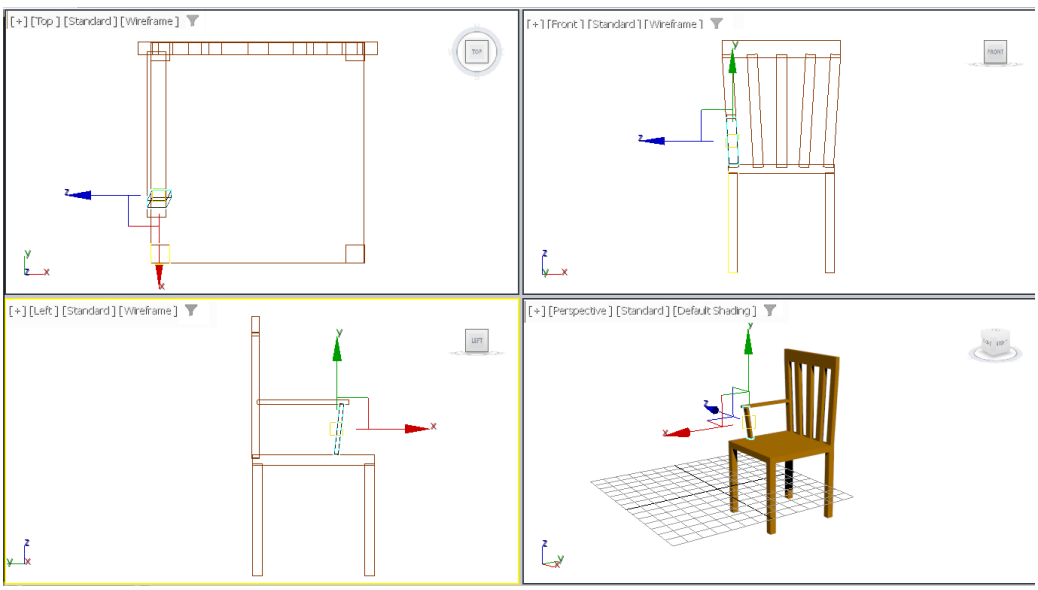

Figure 2-64 *Alignment of box in the viewports*

17. Create a copy of both the boxes created above and align them with *base,* as shown in Figure 2-65.

Evaluation Copy. Do not reproduce. For information visit www.cadcim.com

18. Create a group of four more boxes under the name *handrest*.

19. Select *back*, *base*, *legs*, and *handrest* from the Scene Explorer and group them with the name *chair*.

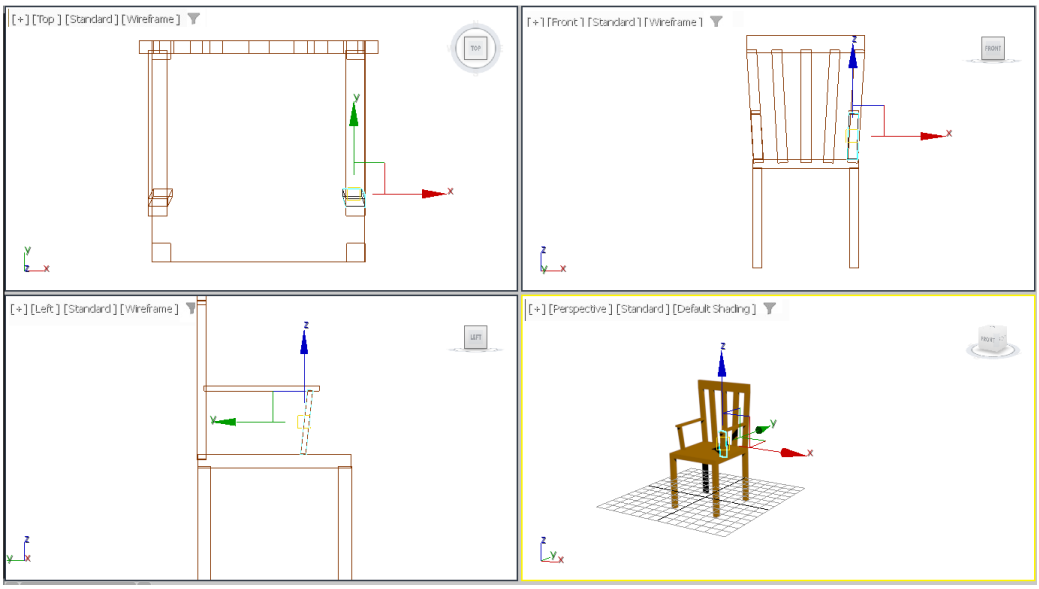

Figure 2-65 *Alignment of boxes in the viewports*

20. Right-click in the viewport and choose **Unhide All** from the quad menu displayed; *table* gets visible in the viewports.

21. Choose the **Select and Uniform Scale** tool from the **Main Toolbar** and scale *chair* in proportion to *table*.

22. Create a copy of *chair* and align *table* and chairs, as shown in Figure 2-66.

Changing Background Color of the Scene

In this section, you will change background color of the scene.

1. Choose **Rendering > Environment** from the menu bar; the **Environment and Effects** dialog box is displayed with the **Environment** tab chosen by default in this dialog box.

2. In the **Background** area of the **Common Parameters** rollout, choose the color swatch corresponding to the **Color** parameter; the **Color Selector: Background Color** dialog box is displayed. Select the white color and choose the **OK** button.

3. Close the **Environment and Effects** dialog box.

Evaluation Copy. Do not reproduce. For information visit www.cadcim.com

Saving and Rendering the Scene

In this section, you will save the scene that you have created and then render it. You can also view the final rendered image of this model by downloading the *c02_3dsmax_2025_rndr.zip* file from *www.cadcim.com*. The path of the file is as follows: *Textbooks > Animation and Visual Effects > 3ds Max > Autodesk 3ds Max 2025: A Comprehensive Guide*

1. Choose **Save** from the **File** menu.

2. Activate the Perspective viewport. Next, choose the **Render Production** tool from the **Main Toolbar**; the **Rendered Frame** window is displayed with the final output of the table, as shown in Figure 2-66.



Figure 2-66 *The final output after rendering*

Tutorial 2

In this tutorial, you will create 3D model of a park bench, as shown in Figure 2-67, using the standard primitives. **(Expected time: 90 min)**



Figure 2-67 *The model of a park bench*

The following steps are required to complete this tutorial:

a. Create the project folder.
b. Create horizontal back supports.

Evaluation Copy. Do not reproduce. For information visit www.cadcim.com

c. Group horizontal back supports.
d. Create horizontal seat supports.
e. Group horizontal seat supports
f. Create vertical back supports.
g. Create rivets for the horizontal back support.
h. Align rivets.
i. Create right side rivets.
j. Rotate the back support.
k. Create leg supports.
l. Create rivets for the seat support.
m. Create legs of the park bench.
n. Save and render the scene.

Creating the Project Folder

Create a new project folder with the name *c02_tut2* at *\Documents\3dsmax2025* and then save the file with the name *c02tut2*, as discussed in Tutorial 1.

Creating Horizontal Back Supports

In this section, you need to create horizontal back supports of the park bench.

1. Activate the Top viewport. Choose **Create > Geometry** in the **Command Panel**; **Standard Primitives** is displayed in the drop-down list. Next, choose the **Box** tool from the **Object Type** rollout; various rollouts are displayed in the **Command Panel**.

2. Expand the **Keyboard Entry** rollout and set the values as given below:

   Length: **1.5** Width: **124** Height: **6.03**

3. Choose the **Create** button from the **Keyboard Entry** rollout; a box is created in the viewports, refer to Figure 2-68.

4. In the **Name and Color** rollout, name the box as *horizontal back support001* and press the ENTER key.

5. Choose the color swatch from the **Name and Color** rollout; the **Object Color** dialog box is displayed. Now, using this dialog box, modify the color of *horizontal back support001* to light brown. Choose the **OK** button to close the **Object Color** dialog box.

   Next, you need to create copies of *horizontal back support001*.

6. Activate the Front viewport. Choose the **Select and Move** tool from the **Main Toolbar**  and make sure that *horizontal back support001* is selected. Next, move the cursor over the Y axis. Press and hold the SHIFT key and the left mouse button. Now, drag *horizontal back support001* upward until the value in the **Y** spinner in the Coordinate display becomes around **8.0**. Release the left mouse button and the SHIFT key; the **Clone Options** dialog box is displayed.

Evaluation Copy. Do not reproduce. For information visit www.cadcim.com

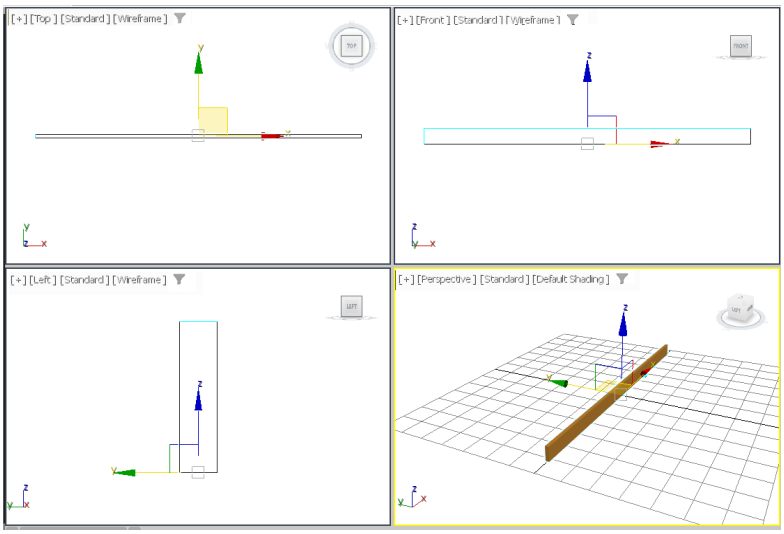

Figure 2-68 *A box created*

7. In the **Clone Options** dialog box, make sure the **Copy** radio button is selected. Set the value in the **Number of Copies** spinner to **4**. Choose the **OK** button; four boxes having same dimensions are created and are automatically named as *horizontal back support002*, *horizontal back support003*, *horizontal back support004*, and *horizontal back support005*.

8. Choose the **Zoom Extents All** tool from the viewport navigation controls; the horizontal back supports are displayed in the viewports, as shown in Figure 2-69.

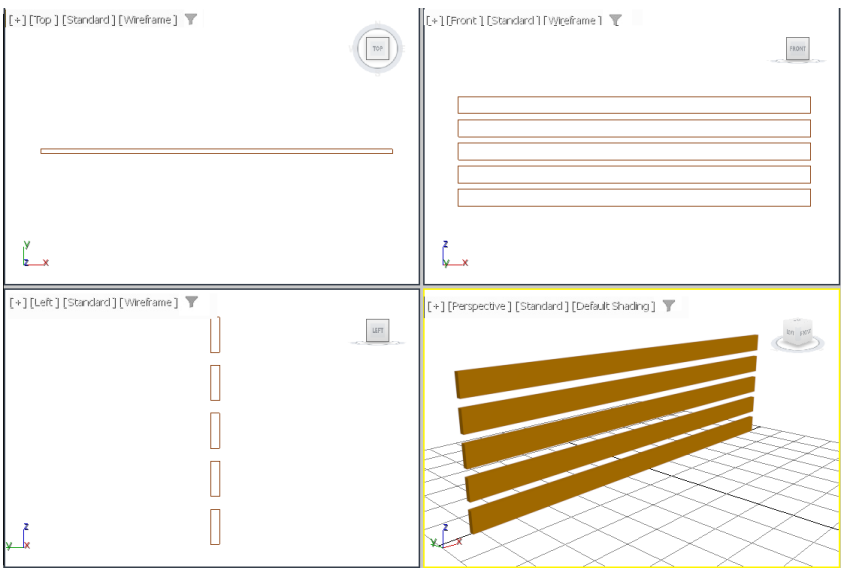

Figure 2-69 *Horizontal back supports displayed in viewports*

Next, you need to rotate *horizontal back support005*.

Evaluation Copy. Do not reproduce. For information visit www.cadcim.com

9. Activate the Left viewport and select *horizontal back support005*. Next, right-click on the **Select and Rotate** tool in the **Main Toolbar**; the **Rotate Transform Type-In** dialog box is displayed.



10. In the **Absolute:World** area, set the value **-10** in the **X** spinner, as shown in Figure 2-70 and then press the ENTER key; *horizontal back support005* gets rotated, refer to Figure 2-71. Now, close the **Rotate Transform Type-In** dialog box.

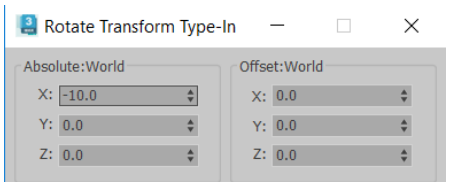

Figure 2-70 *The **Rotate Transform Type-In** dialog box*

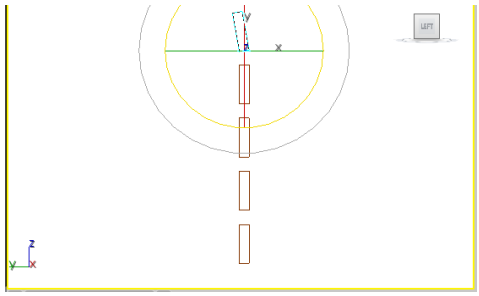

Figure 2-71 *The horizontal back support005 geometry after being rotated in the Left viewport*

11. Click anywhere in the viewport to deselect *horizontal back support005*.

Grouping Horizontal Back Supports

In this section, you will group all the horizontal seat supports.

1. Activate the Left viewport and choose the **Select Object** tool. Now, select all the horizontal back supports by dragging a selection box around them, refer to Figure 2-72.



2. Choose **Group > Group** from the menu bar; the **Group** dialog box is displayed.

3. In the **Group name** text box, enter **horizontal back support**, as shown in Figure 2-73 and then choose the **OK** button; all the horizontal back supports are grouped together.

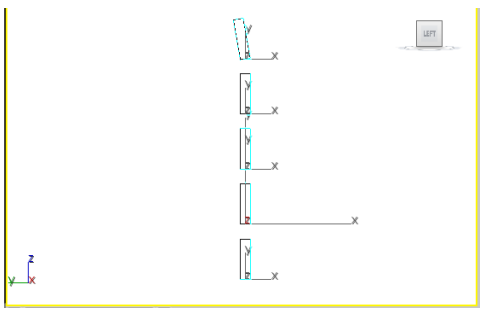

Figure 2-72 *All horizontal back supports selected simultaneously*

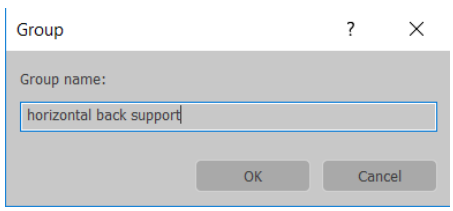

Figure 2-73 *The **Group** dialog box*

Evaluation Copy. Do not reproduce. For information visit www.cadcim.com

Creating Horizontal Seat Supports

In this section, you will create horizontal seat supports.

1. Activate the Top viewport and choose the **Box** tool from the **Object Type** rollout.

2. Expand the **Keyboard Entry** rollout and set the values as follows:

   Length: **6.03** Width: **124** Height: **1.5**

3. Choose the **Create** button from the **Keyboard Entry** rollout; a box is created in the viewports.

4. In the **Name and Color** rollout, name the box as *horizontal seat support001*.

5. Use the color swatch to assign the same color to *horizontal seat support001* that you assigned to *horizontal back support*.

6. Choose the **Select and Move** tool from the **Main Toolbar** and align *horizontal seat support001* with *horizontal back support* in the viewports, refer to Figure 2-74.

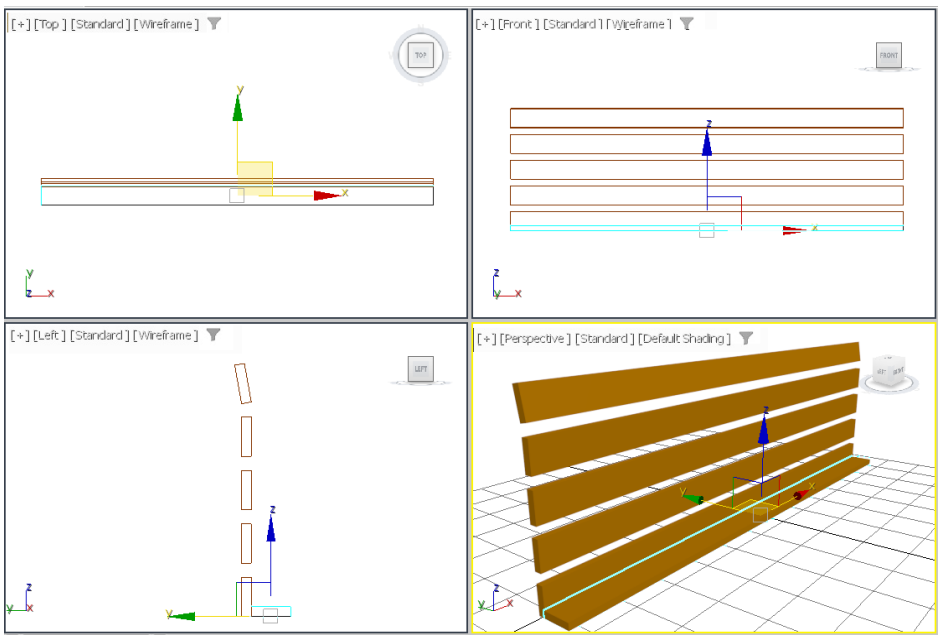

Figure 2-74 *Alignment of horizontal seat support001 in viewports*

Next, you need to create four copies of *horizontal seat support001*.

7. Activate the Top viewport and make sure *horizontal seat support001* is selected. Next, place the cursor over the vertical axis. Press and hold the SHIFT key and drag *horizontal seat support001* downward until the value in the **Y** spinner in the Coordinate display becomes around **-7.5**. Release the left mouse button and the SHIFT key; the **Clone Options** dialog box is displayed.

Evaluation Copy. Do not reproduce. For information visit www.cadcim.com

8. In the **Clone Options** dialog box, make sure the **Copy** radio button is selected. Set the value in the **Number of Copies** spinner to **4** and choose the **OK** button; four boxes having same dimensions are created and are automatically named as *horizontal seat support002*, *horizontal seat support003*, *horizontal seat support004*, and *horizontal seat support005*.

9. Choose the **Zoom Extents All** tool; all the objects are displayed in the viewports, as shown in Figure 2-75.

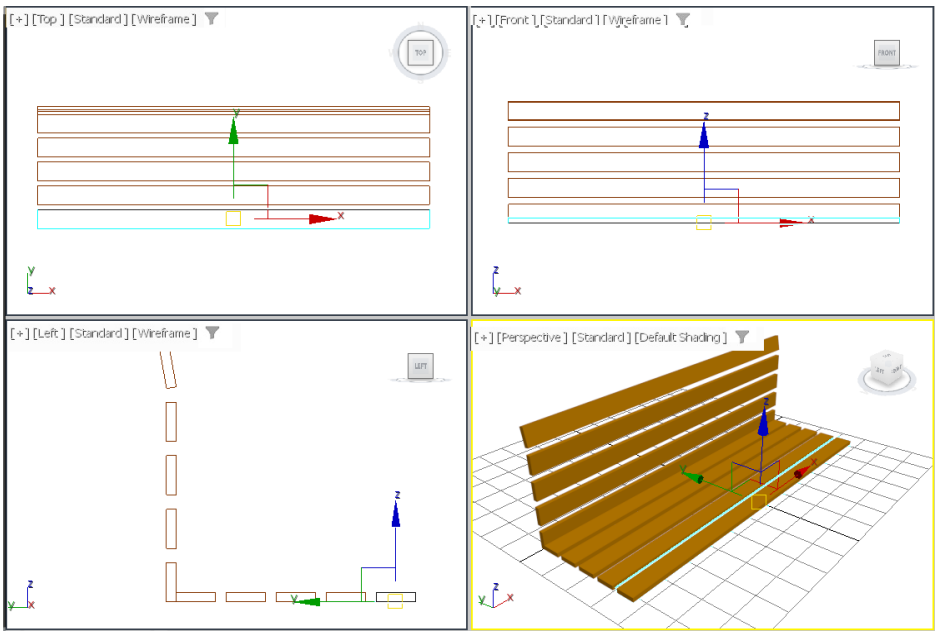

Figure 2-75 *Horizontal seat supports displayed in the viewports*

10. Click anywhere in the viewport to deselect the objects.

Grouping Horizontal Seat Supports

In this section, you will group all horizontal seat supports using the Scene Explorer.

1. Select all the horizontal seat supports from the list displayed in the Scene Explorer using the CTRL key and then right-click; a quad menu is displayed.

2. Choose **Add Selected to > New Group** from this quad menu; the **Group** dialog box is displayed.

3. In the **Group name** text box, enter **horizontal seat support** and then choose the **OK** button.

Creating Vertical Back Supports

In this section, you will create vertical back supports of the park bench.

1. Activate the Top viewport. Choose **Create > Geometry** in the **Command Panel**; **Standard Primitives** is displayed in the drop-down list. Next, choose the **Cylinder** tool in the **Object Type** rollout.

Evaluation Copy. Do not reproduce. For information visit www.cadcim.com

2. In the **Keyboard Entry** rollout, set the values as follows:

   X: **-60** Y: **1.5** Z: **0.0**

   Radius: **1.0** Height: **38.0**

3. Now, choose the **Create** button in the **Keyboard Entry** rollout; a cylinder is created in the viewports, as shown in Figure 2-76.

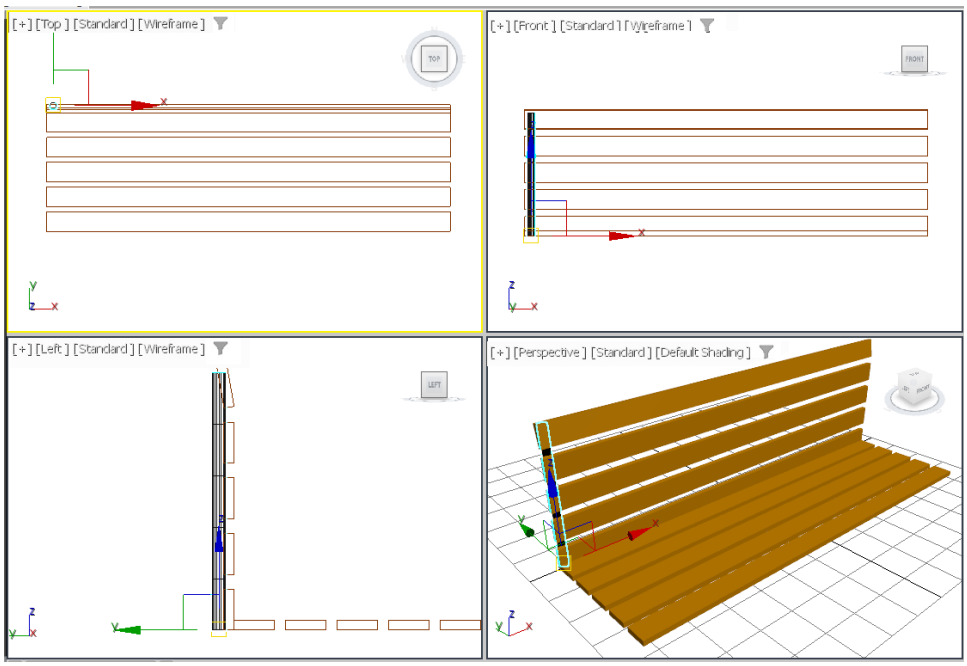

Figure 2-76 *The vertical back support001 geometry in viewports*

4. In the **Name and Color** rollout, name the cylinder as *vertical back support001* and press the ENTER key.

5. Change the color of *vertical back support001* to black.

   Next, you need to create a copy of *vertical back support001*.

6. Activate the Front viewport by middle-clicking in it. Choose the **Select and Move** tool and move the cursor over the horizontal axis. Press and hold the SHIFT key and the left mouse button, and then drag *vertical back support001* to the right side to align it on the right side of *horizontal back support*, as shown in Figure 2-77. Release the left mouse button and the SHIFT key; the **Clone Options** dialog box is displayed.

7. In the **Clone Options** dialog box, make sure the **Copy** radio button is selected and 1 is displayed in the **Number of Copies** spinner. Next, choose the **OK** button; *vertical back support002* is created having same dimensions as *vertical back support001*, refer to Figure 2-77.

Evaluation Copy. Do not reproduce. For information visit www.cadcim.com

8. Click anywhere in the viewport to deselect the objects.

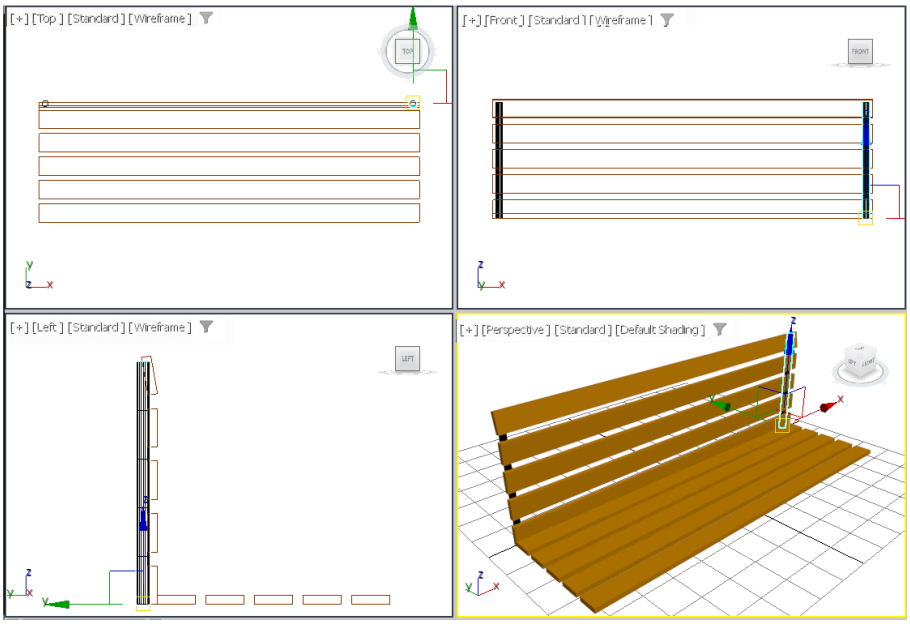

Figure 2-77 *The vertical back support002 in viewports*

Creating Rivets for Horizontal Back Support

In this section, you will create the cap and the body of rivet using the **Sphere** and **Cylinder** tools.

1. Activate the Top viewport and choose **Create > Geometry** in the **Command Panel**; **Standard Primitives** is displayed in the drop-down list. Next, choose the **Sphere** tool in the **Object Type** rollout.

2. In the **Keyboard Entry** rollout, set the value **0.8** in the **Radius** spinner and choose the **Create** button; a sphere is created.

3. In the **Parameters** rollout, make sure that the **Smooth** check box and the **Chop** radio button are selected. Enter the value **0.5** in the **Hemisphere** spinner.

4. Name the sphere as **cap** and assign black color to it.

   Next, you need to create a cylinder for the body of the rivet.

5. In the **Command Panel**, choose **Create > Geometry > Standard Primitives**. Next, choose the **Cylinder** tool from the **Object Type** rollout.

6. In the **Keyboard Entry** rollout, set the values as follows:

   X: **0** Y: **0** Z: **0**

   Radius: **0.241** Height: **3.5**

Evaluation Copy. Do not reproduce. For information visit www.cadcim.com

7. Choose the **Create** button from the **Keyboard Entry** rollout; a cylinder is created.

8. Name the cylinder as **body** and assign black color to it.

9. Activate the Left viewport and select *cap* and *body* simultaneously from the Scene Explorer by holding the CTRL key; *cap* and *body* are selected in the viewports.

10. Choose the **Zoom Extents All Selected** tool to increase the magnification of the selected objects in the viewports.



11. Next, align *cap* and *body* of the rivet in the Left viewport using the **Select and Move** tool, as shown in Figure 2-78.



Note

*You may need to use the **Zoom** and **Pan View** tools to align cap and body of the rivet.*

Next, you need to group *body* and *cap* to create the rivet.

12. Select *cap* and *body* of the rivet in the Scene Explorer and group them as *rivet001*.

13. Choose the **Zoom Extents All** tool and move *rivet001* in the Left viewport to visualize it properly, as shown in Figure 2-79.

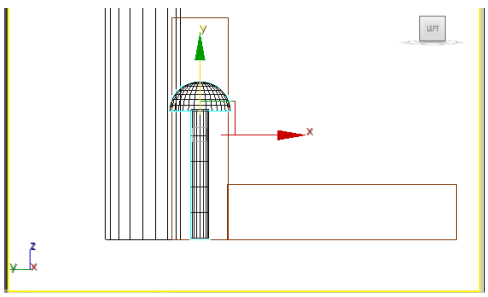

Figure 2-78 *Alignment of cap and body*

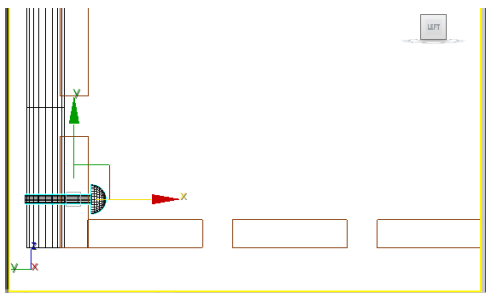

Figure 2-79 *The rivet001 group in the Left viewport*

Aligning Rivets

In this section, you will align the rivets.

1. In the Left viewport, select *rivet001* and right-click on the **Select and Rotate** tool; the **Rotate Transform Type-In** dialog box is displayed. Also, a circular gizmo along with the X, Y, and Z axes is displayed.



2. In the **Offset:Screen** area of the **Rotate Transform Type-In** dialog box, enter **-90** in the **Z** spinner and press ENTER; *rivet001* gets rotated, as shown in Figure 2-80. Now, close the **Rotate Transform Type-In** dialog box.
3. Choose the **Select and Move** tool and align *rivet001* with *horizontal back support* in the viewports, as shown in Figure 2-81.

Evaluation Copy. Do not reproduce. For information visit www.cadcim.com

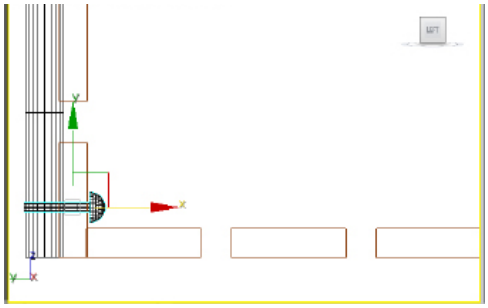

Figure 2-80 *Rotating rivet001 in the Left viewport*

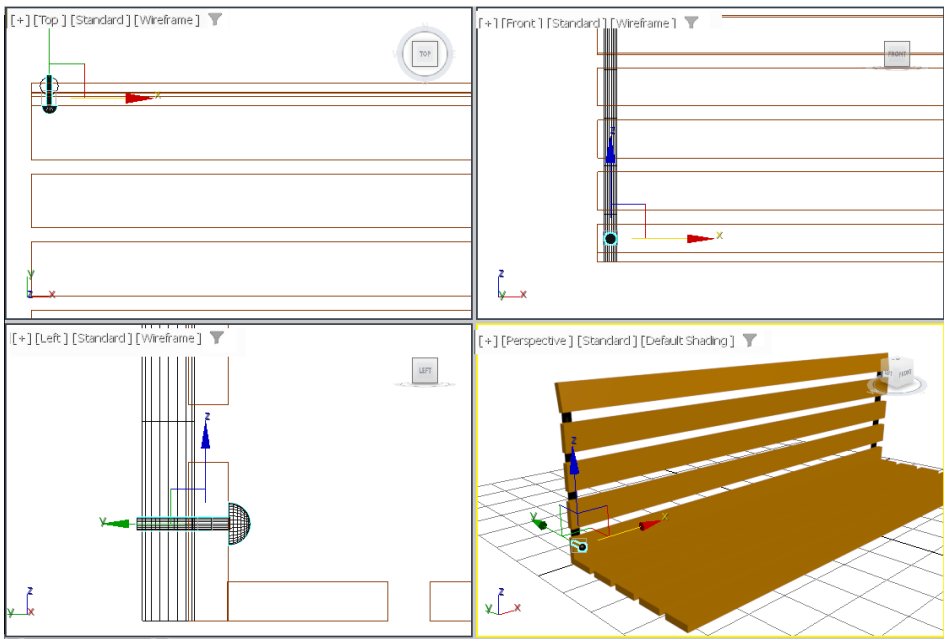

Figure 2-81 *Alignment of rivet001 with horizontal back support*

4. In the Left viewport, select *rivet001* using the **Select and Move** tool and move the cursor over the vertical axis. Now, create 4 copies of *rivet001*. These copies are automatically named as *rivet002*, *rivet003*, *rivet004*, and *rivet005*. Align them in the Left viewport, refer to Figure 2-82.

5. Select the uppermost rivet and choose the **Select and Rotate** tool. Now, rotate the uppermost rivet by using the outermost ring of the **Select and Rotate** tool in the counterclockwise direction until the value in the **X** spinner in the coordinate display becomes **-15**, refer to Figure 2-83. Next, align it using the **Select and Move** tool.

Evaluation Copy. Do not reproduce. For information visit www.cadcim.com

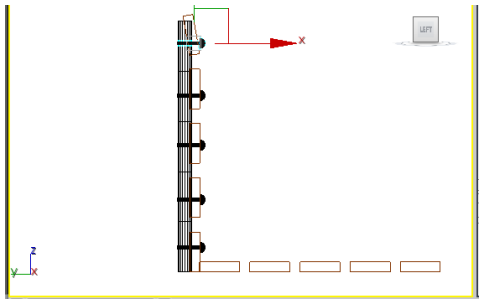

Figure 2-82 *Alignment of rivets in the Left viewport*

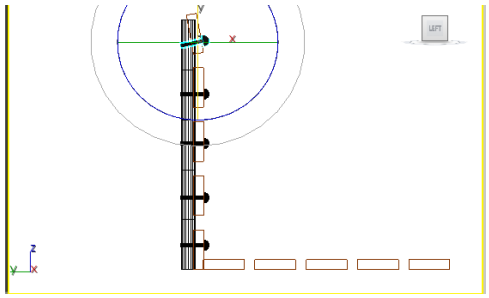

Figure 2-83 *Rotating uppermost rivet*

6. Press and hold the CTRL key and select all the rivets from the Scene Explorer and group them as *left side rivets*. Click anywhere in the viewport to deselect the objects.



Note

To change the viewport without deselecting the objects, middle-click in that viewport; the objects will remain selected.

Creating Right Side Rivets

In this section, you will copy *left side rivets* for creating right side rivets.

1. Select *left side rivets* in the Front viewport using the **Select and Move** tool and move the cursor over the horizontal axis. Next, press and hold the SHIFT key and the left mouse button, and then drag the mouse toward the right side. Release the left mouse button and the SHIFT key exactly over *vertical back support002* on the right side; the **Clone Options** dialog box is displayed.

2. In the **Clone Options** dialog box, make sure the **Copy** radio button is selected. In the **Name** text box, enter **right side rivets** to modify the name of the group and choose **OK**; *right side rivets* group is displayed, as shown in Figure 2-84.

   Now, you need to select *horizontal back support*, *vertical back support001*, *vertical back support002, left side rivets,* and *right side rivets*.

3. Select *horizontal back support*, *vertical back support001*, *vertical back support002, left side rivets*, and *right side rivets* using the CTRL key from the Scene Explorer and then group them as *back support* as described earlier.

Rotating the Back Support

In this section, you will rotate the back support.

1. Select *back support* in the Left viewport and choose the **Select and Rotate** tool; a circular gizmo is displayed.

Evaluation Copy. Do not reproduce. For information visit www.cadcim.com

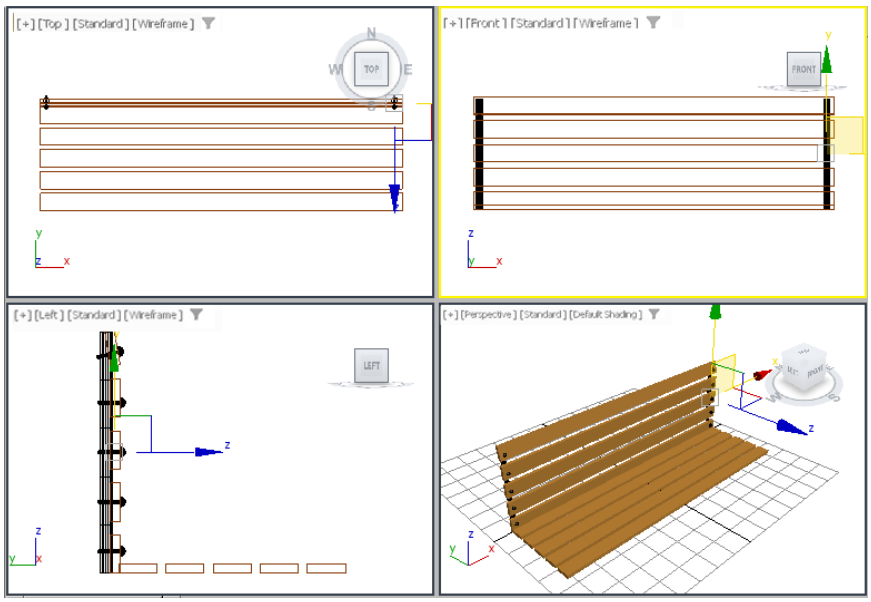

Figure 2-84 *The right side rivets group displayed in viewports*

2. Move the cursor over the Z-axis, which is blue in color; the Z-axis turns yellow and becomes active. Now, press the left mouse button and drag the cursor counterclockwise to rotate the back support until the value in the **Z** spinner in the coordinate display becomes around **10**. Release the left mouse button; the *back support* group gets rotated, as shown in Figure 2-85.

3. Choose the **Select and Move** tool and align *back support* with *horizontal seat support*, as shown in Figure 2-86.

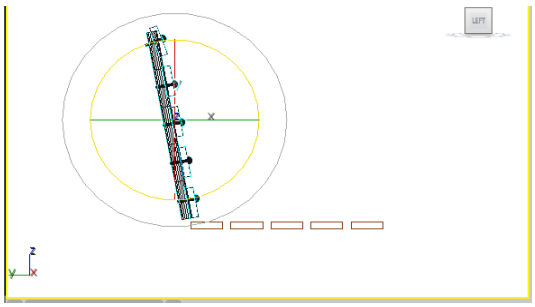

Figure 2-85 *The back support after being rotated in the Left viewport*

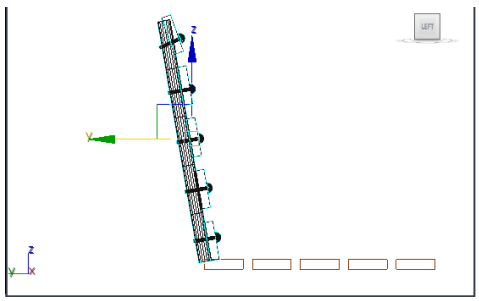

Figure 2-86 *Alignment of back support in the Left viewport*

Creating Leg Supports

In this section, you will create leg support.

1. Activate the Top viewport and choose **Create > Geometry** in the **Command Panel**; the **Standard Primitives** is displayed in the drop-down list. Next, choose the **Box** tool in the **Object Type** rollout.

Evaluation Copy. Do not reproduce. For information visit www.cadcim.com

2. In the **Keyboard Entry** rollout, set the parameters as follows:

   Length: **36.677** Width: **9.0** Height: **2.8**

3. Choose the **Create** button from the **Keyboard Entry** rollout; the box is created.

4. Name the box as *leg support001* and change its color to black.

5. Choose the **Select and Move** tool and align *leg support001* to the extreme left and below the *horizontal seat support* in all viewports, refer to Figure 2-87.

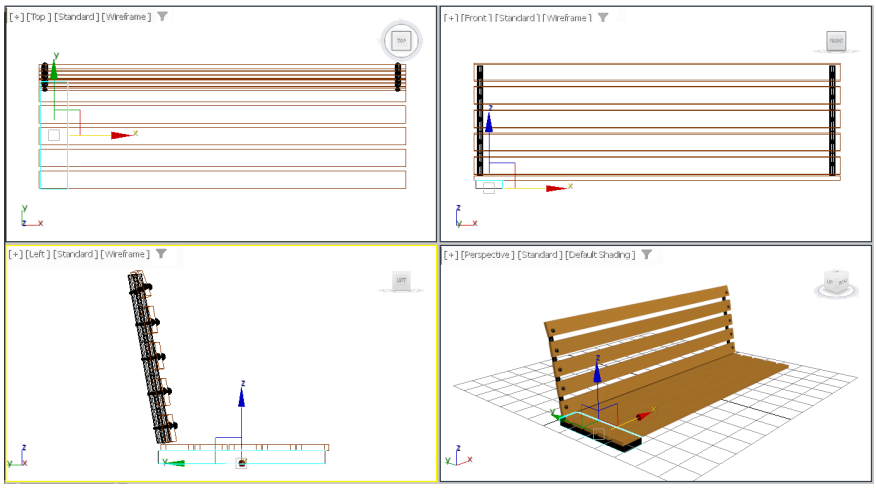

Figure 2-87 *Alignment of leg support001 with horizontal seat support*

Next, you need to copy *leg support001* to create the leg support on the right side of *horizontal seat support*.

6. Activate the Top viewport by middle-clicking in it and create a copy of *leg support001* as described earlier. It is automatically named as *leg support002*.

7. Choose the **Select and Move** tool and align *leg support002* to *horizontal seat support* in all viewports, as shown in Figure 2-88.

   Next, you need to create another box for other leg supports.

8. Activate the Top viewport and create a box using the values as follows:

   Length: **9.0** Width: **124** Height: **2.8**

9. In the **Name and Color** rollout, name the box as *leg support003* and change its color to black.

10. Choose the **Select and Move** tool and align *leg support003* with *horizontal seat support* in the viewports, as shown in Figure 2-89.

Evaluation Copy. Do not reproduce. For information visit www.cadcim.com

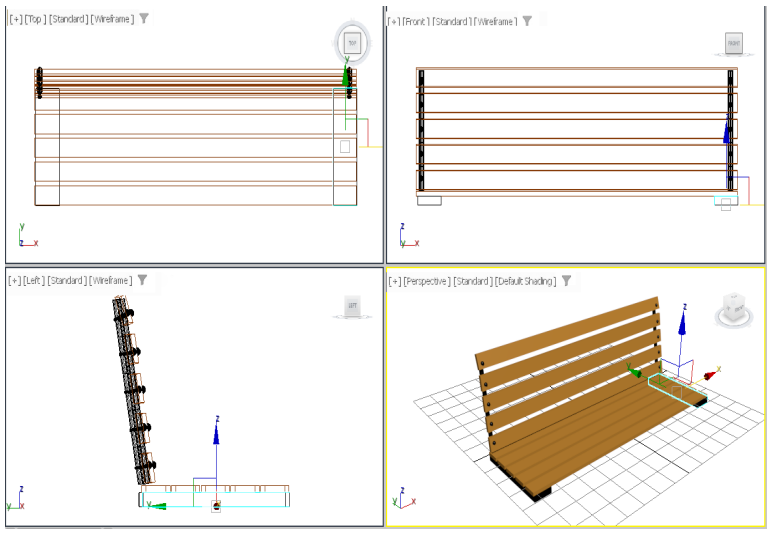

Figure 2-88 *Alignment of leg support002 with horizontal seat support*

Note

You need to use the ***Orbit*** *tool to view leg support003 properly in the Perspective viewport.*

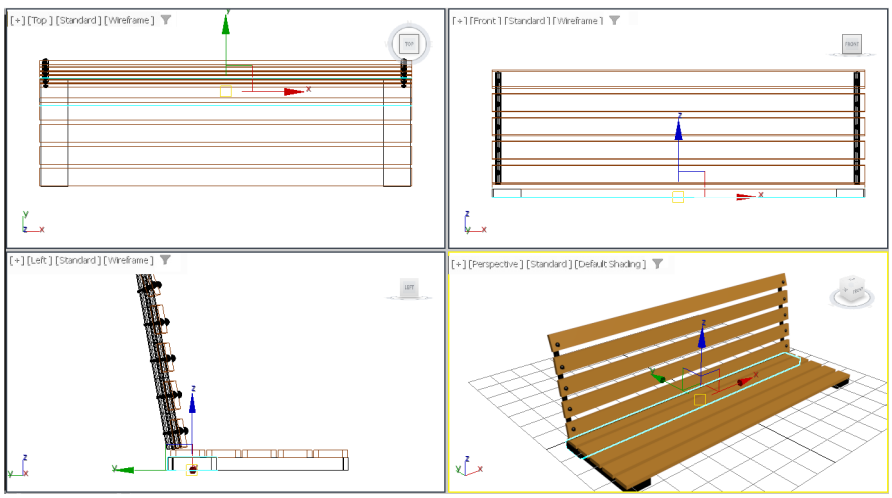

Figure 2-89 *Alignment of leg support003 with horizontal seat support in the viewports*

11. Create a copy of *leg support003* in the Top viewport; it is automatically named as *leg support004*.

12. Choose the **Select and Move** tool and align *leg support004* with *horizontal seat support* in all the viewports, refer to Figure 2-90.

Evaluation Copy. Do not reproduce. For information visit www.cadcim.com

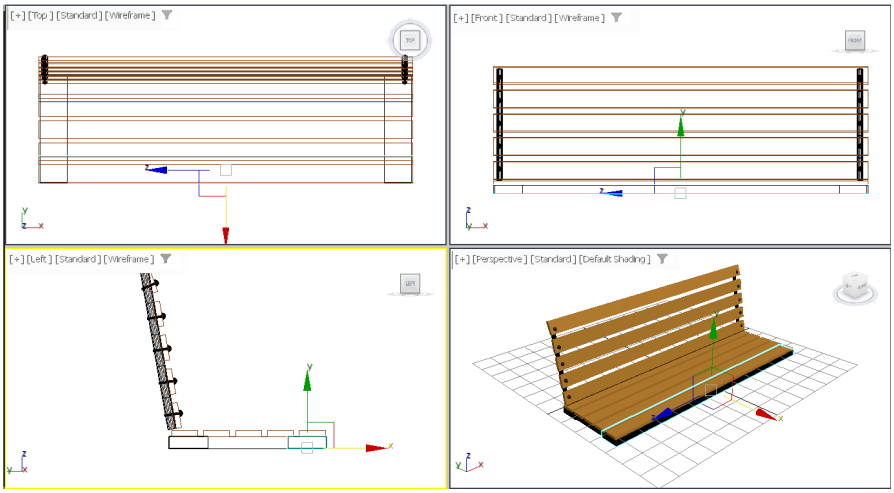

Figure 2-90 *Alignment of leg support004 in viewports*

Creating Rivets for the Seat Support

To create the rivets for *horizontal seat support*, you need to copy *right side rivets*. As you already know that *right side rivets* are grouped under *back support,* therefore first you need to open this group to access them independently. After opening, *back support* group will be ungrouped temporarily and you can transform the objects within it independently.

1. Activate the Left viewport and select *back support*.

2. Choose **Group > Open** from the menu bar; *back support* is now ungrouped temporarily. Also, a pink colored bounding box is displayed around *back support*.

3. Choose the **Select By Name** tool; the **Select From Scene** dialog box is displayed.

4. In the **Select From Scene** dialog box, select *right side rivets* and choose the **OK** button, refer to Figure 2-91.

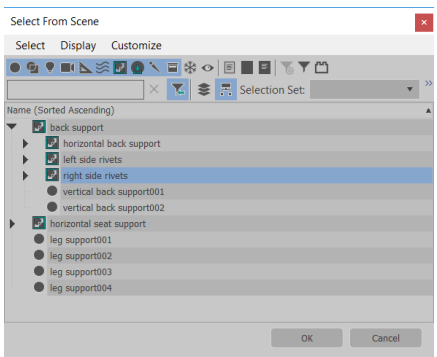

Figure 2-91 *The right side rivets group selected in the* ***Select From Scene*** *dialog box*

5. Make sure *right side rivets* group is still selected. Now, create a copy of *right side rivets* and name it as *right side seat rivets*, as shown in Figure 2-92.

6. Make sure that *right side seat rivets* group is selected and choose **Group > Detach** from the menu bar; *right side seat rivets* group is detached from *back support* group.

7. Select the pink colored gizmo of *back support* group and choose **Group > Close** from the menu bar to group them again.

Evaluation Copy. Do not reproduce. For information visit www.cadcim.com

Next, you need to align *right side seat rivets* group.

8. Choose the **Select and Rotate** tool and select *right side seat rivets* in the Left viewport. Then, move the cursor over the Z-axis. Now, press the left mouse button and drag the cursor in the counterclockwise direction to rotate *right side seat rivets* until the angle of rotation in the **Z** spinner becomes **80**, refer to Figure 2-93.

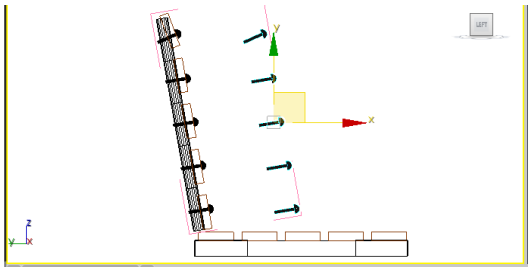

Figure 2-92 *The right side seat rivets group in the Left viewport*

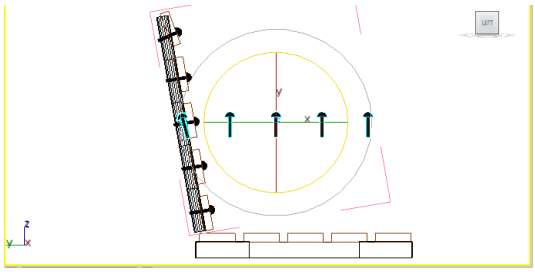

Figure 2-93 *Rotating the right side seat rivets group in the Left viewport*

9. Choose the **Select and Move** tool. Now, move the cursor over the vertical axis and then drag the mouse downward to align *right side seat rivets* with *horizontal seat support*, as shown in Figure 2-94.

Next, you need to align the rivet (which is near the horizontal back support) to the horizontal seat support.

10. Make sure *right side seat rivets* group is selected and choose **Group > Open** from the menu bar to ungroup them temporarily.

11. Select the rivet which is near *horizontal back support* and choose the **Select and Rotate** tool. Move the cursor over the Z-axis. Now, press the left mouse button and drag the cursor in the clockwise direction to rotate it until the angle of rotation in the **Z** spinner in the coordinate display becomes around **-15**, refer to Figure 2-95.

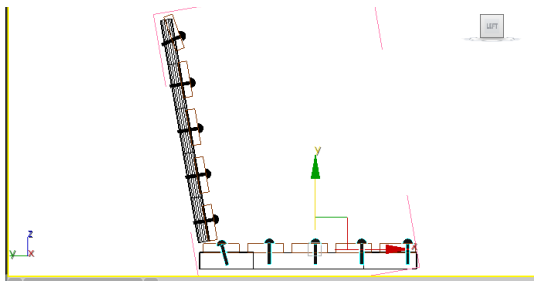

Figure 2-94 *Alignment of right side seat rivets in the Left viewport*

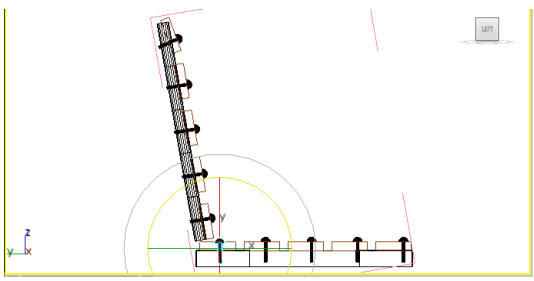

Figure 2-95 *Rotating rivet in the Left viewport*

12. Choose the **Select and Move** tool and align all rivets of *right side seat rivets* group with *horizontal seat support*, as shown in Figure 2-96.

Evaluation Copy. Do not reproduce. For information visit www.cadcim.com

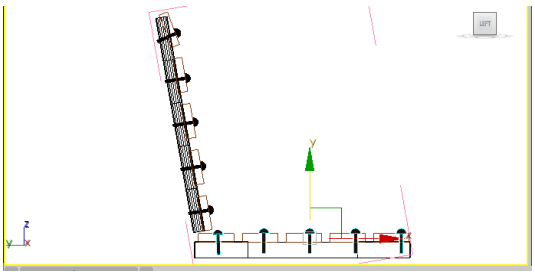

Figure 2-96 *Alignment of right side seat rivets in the Left viewport*

13. Make sure that one of the rivets of *right side seat rivets* group is selected and choose **Group > Close** from the menu bar to group them again.

    Next, you need to copy *right side seat rivets* to create rivets on the left side of *horizontal seat support*.

14. Activate the Top viewport and create a copy of *right side seat rivets*. Name the new group as *left side seat rivets*.

15. Align *left side seat rivets* using the **Select and Move** tool in the viewports, as shown in Figure 2-97.

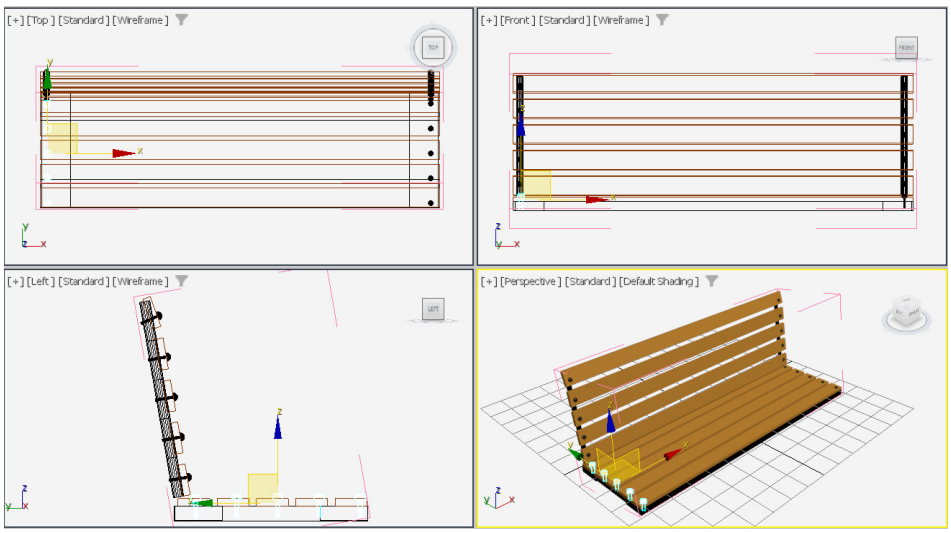

Figure 2-97 *Alignment of left side seat rivets in viewports*

Creating Legs of the Park Bench

In this section, you will create legs of the park bench.

1. Activate the Top viewport and choose **Create > Geometry** in the **Command Panel**; **Standard Primitives** is displayed in the drop-down list. Next, choose the **Box** tool in the **Object Type** rollout.

Evaluation Copy. Do not reproduce. For information visit www.cadcim.com

2. In the **Keyboard Entry** rollout, set the values as follows:

   Length: **4.0** Width: **3.0** Height: **26.88**

3. Choose the **Create** button from the **Keyboard Entry** rollout; a box is created.

4. In the **Name and Color** rollout, name the box as *leg001*. Also, change its color to black.

5. Choose the **Select and Move** tool and align *leg001* with *leg support001* in the viewports, refer to Figure 2-98. You need to adjust the viewport to display all the objects properly using the **Zoom** and **Pan View** tools.

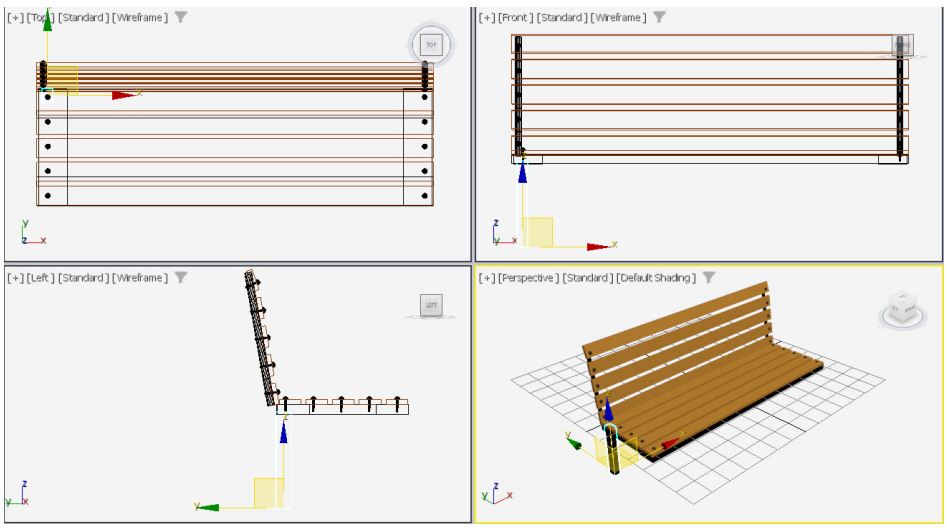

Figure 2-98 *Alignment of leg001 in viewports*

6. Create three copies of *leg001* to create three more legs. These are automatically named as *leg002*, *leg003*, and *leg004*.

7. Choose the **Select and Move** tool and align *leg002*, *leg003*, and *leg004* in the viewports, as shown in Figure 2-99.

8. Choose the **Zoom Extents All** tool. Next, modify the view in the Perspective viewport using the **Orbit** tool.

Saving and Rendering the Scene

In this section, you will save and render the scene. You can also view the final rendered image of this scene by downloading the *c02_3dsmax_2025_rndr.zip* file from *www.cadcim.com*. The path of the file is as follows: *Textbooks > Animation and Visual Effects > 3ds Max > Autodesk 3ds Max 2025: A Comprehensive Guide*

1. Change the background color of the scene to white as discussed in Tutorial 1. Choose **Save** from the **File** menu.

Evaluation Copy. Do not reproduce. For information visit www.cadcim.com

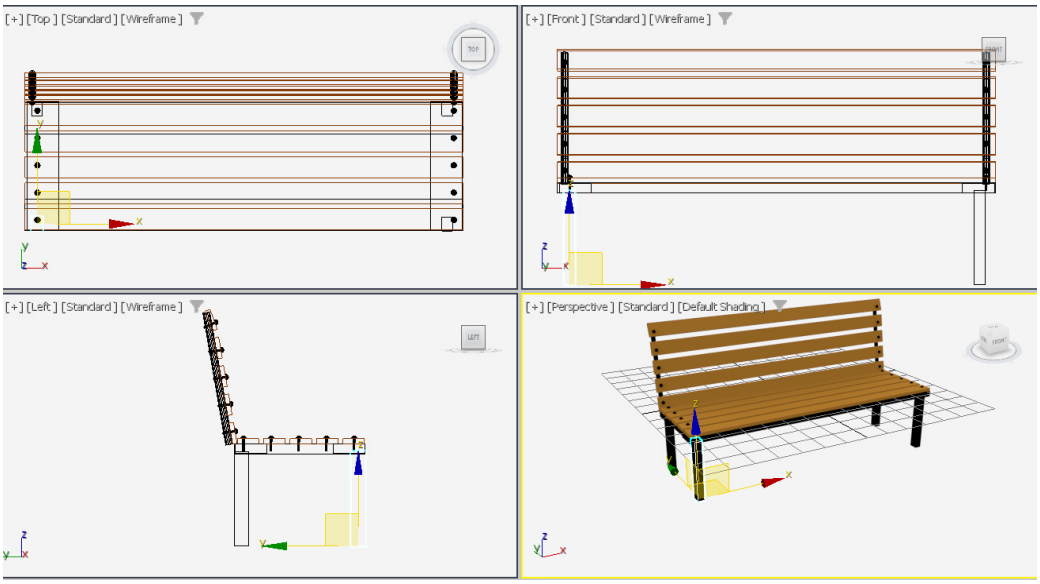

Figure 2-99 *Alignment of legs in viewports*

2. Activate the Perspective viewport. Next, choose the **Render Production** tool from the **Main Toolbar**; the **Rendered Frame** window is displayed. This window shows the final output of the scene, refer to Figure 2-100.



Figure 2-100 *The final output after rendering*

Evaluation Copy. Do not reproduce. For information visit www.cadcim.com

Self-Evaluation Test

Answer the following questions and then compare them to those given at the end of this chapter:

1. Which of the following tools is used to position and orient an object with respect to another object?

   (a) **Select and Scale** (b) **Select and Place**
   (c) **Select and Move** (d) **Select and Rotate**

2. Which of the following tools is used to extrude and bevel the text without applying modifier?

   (a) **TextPlus** (b) **Torus**
   (c) **Pyramid** (d) **Plane**

3. Which of the following tools is used to rotate an object in the active viewport?

   (a) **Zoom Extents All** (b) **Orbit**
   (c) **Pan** (d) All of these

4. Which of the following tools is used to select an object from the list of objects that are currently present in the scene ?

   (a) **Select Object** (b) **Select and Move**
   (c) **Select by Name** (d) **Select and Rotate**

5. Which of the following rollouts is available when you choose the **Box** tool?

   (a) **Name and Color** (b) **Creation Method**
   (c) **Parameters** (d) All of these

6. Which of the following objects is not a standard primitive?

   (a) Pyramid (b) Geosphere
   (c) Torus Knot (d) Torus

7. To stretch and squash an object, you need to choose the _____ tool from the **Main Toolbar**.

8. You can use the _____ rollout to change the name and color of an object.

9. You can use the _____ rollout to modify the dimensions of an object.

10. The _____ tool is used to move through the viewport.

Evaluation Copy. Do not reproduce. For information visit www.cadcim.com

11. On starting 3ds Max, a screen with three viewports will be displayed. (T/F)

12. You can create any standard primitive dynamically as well as by entering the parameters in the **Keyboard Entry** rollout. (T/F)

13. The options in the **Creation Method** rollout are used only when you create an object using the keyboard. (T/F)

Review Questions

Answer the following questions:

1. Which of the following tools is used to display all objects in the viewports?

   (a) **Zoom** (b) **Pan**
   (c) **Zoom Extents All** (d) **Orbit**

2. Which of the following tools is used to move an object along the X, Y, or Z axis?

   (a) **Select Object** (b) **Select and Move**
   (c) **Select by Name** (d) All of these

3. You need to choose the _____ tool and press and hold the _____ key to select more than one object simultaneously in a viewport.

4. While creating the clone of an object, you need to hold the CTRL key and drag the object. (T/F)

5. To change the background color of a scene, you need to choose **Rendering > Environment** from the menu bar. (T/F)

6. A geosphere is smoother than a sphere. (T/F)

7. The **Zoom Region** tool is used to adjust the view of all objects in the viewports to display them properly. (T/F)

8. You need to choose the **Render Production** tool from the **Main Toolbar** to render a view without using the **Render Setup** dialog box. (T/F)

9. You can use individual parts of a teapot to make a new object. (T/F)

10. You can choose **Reset** from the **File** menu to reset all settings of 3ds Max. (T/F)

Evaluation Copy. Do not reproduce. For information visit www.cadcim.com

EXERCISES

The rendered output of the models used in the following exercises can be accessed by downloading the *c02_3dsmax_2025_exr.zip* file from *www.cadcim.com*. The path of the file is as follows: *Textbooks > Animation and Visual Effects > 3ds Max > Autodesk 3ds Max 2025: A Comprehensive Guide*

Exercise 1

Create the model shown in Figure 2-101 using your own dimensions.

(Expected time: 15 min)

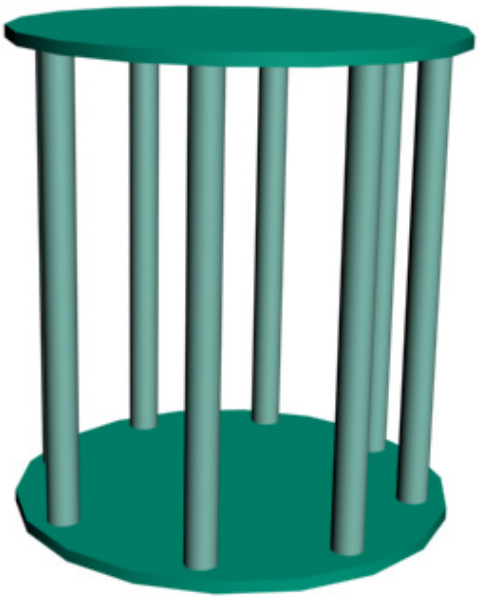

Figure 2-101 *The model to be created in Exercise 1*

Exercise 2

Create the nut model shown in Figures 2-102 and 2-103 using your own dimensions.

(Expected time: 15 min)

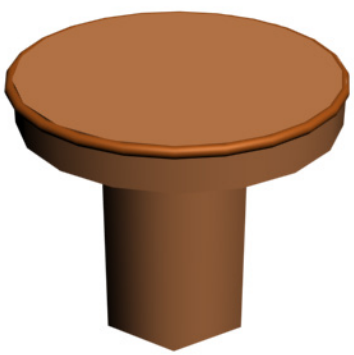

Figure 2-102 *The model of a nut (view 1)*



Figure 2-103 *The model of a nut (view 2)*

Evaluation Copy. Do not reproduce. For information visit www.cadcim.com

Exercise 3

Create the model of a table shown in Figure 2-104 using your own dimensions.

(Expected time: 15 min)



Figure 2-104 *The model of a table*

Exercise 4

Create the model of a table shown in Figure 2-105 using your own dimensions.

(Expected time: 25 min)



Figure 2-105 *The model of a table*

Evaluation Copy. Do not reproduce. For information visit www.cadcim.com

Answers to Self-Evaluation Test

1. b, **2.** a, **3.** b, **4.** c, **5.** d, **6.** c, **7. Select and Squash**, **8. Name and Color**, **9. Parameters**, **10. Walk Through**, **11.** F, **12.** T, **13.** F.

Evaluation Copy. Do not reproduce. For information visit www.cadcim.com