Chapter 19

Introduction to Plastic Mold Design



Learning Objectives

After completing this chapter, you will be able to:

- *Understand the components required in a mold system*
- *Create core and cavity of a model*
- *Specify locations for gates*
- *Create various types of gates as per the requirement*
- *Create mold base for the component*
- *Create runner and cooling systems in the mold base*

INTRODUCTION TO PLASTIC MOLD DESIGN

Mold Design is the process of shaping pliable raw material into a desired shape by using a rigid frame called pattern. This pattern is then used to create a mold. A mold is a hollow block that is used to fill some material to get a component of desired shape and size. In Autodesk Inventor, you can design a mold by using the tools available in the Mold environment.

INVOKING THE MOLD ENVIRONMENT

To invoke the Mold environment, start Autodesk Inventor and then choose the **New** tool from the **Launch** panel in the **Get Started** tab of the **Ribbon**; the **Create New File** dialog box will be displayed. In this dialog box, select the **Mold Design(mm).iam** option from the **Assembly - Assemble 2D and 3D components** node, and then choose the **Create** button; the Assembly interface will be displayed along with the **Create Mold Design** dialog box, as shown in Figure 19-1.

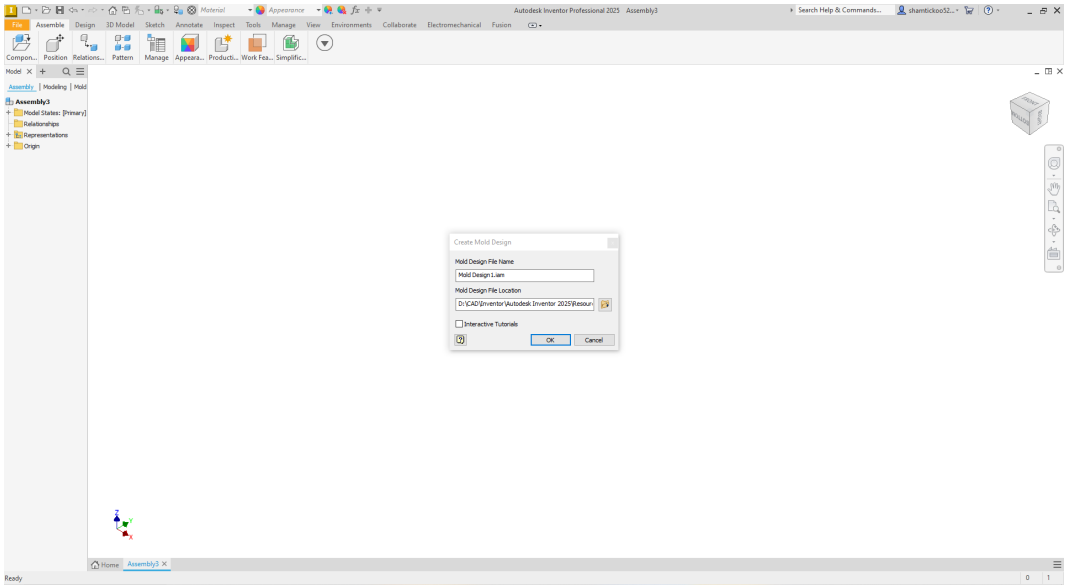

Figure 19-1 *Assembly interface with the* ***Create Mold Design*** *dialog box*

In this dialog box, specify the name of the file in the **Mold Design File Name** edit box. You can specify the location of the mold design file in the **Mold Design File Location** edit box. After specifying the desired options, choose the **OK** button from the dialog box to create a mold design file; the Mold Design interface will be displayed, as shown in Figure 19-2. The tools in the **Mold Layout** tab are arranged according to their application in creating Mold Design.

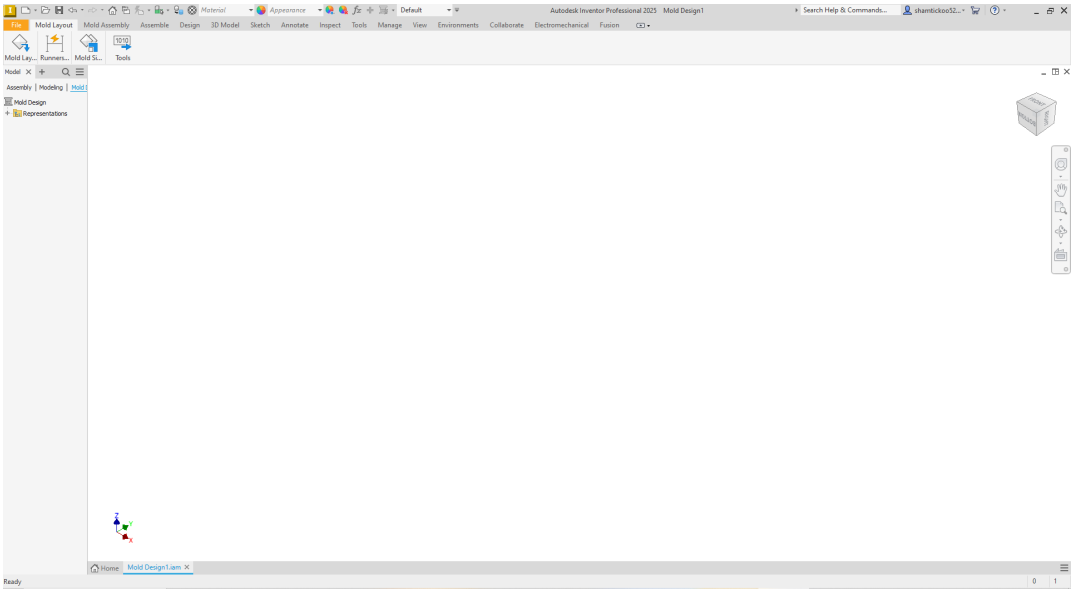

Figure 19-2 *Mold Design interface of Autodesk Inventor*

METHODS OF DESIGNING CORE AND CAVITY

In any mold, there are two parts that form the shape of the component to be created: core and cavity. You can design core and cavity by using two methods. In the first method, you will import a model and then create core/cavity from it. However, in the second method, you will create core and cavity from two individual components respectively in the Mold environment. These two methods are discussed next.

Importing Plastic Part in Mold Environment



To import a model in the Mold environment, choose the **Plastic Part** tool from the **Plastic Part** drop-down of the **Mold Layout** panel of the **Mold Layout** tab; the **Plastic Part** dialog box will be displayed, as shown in Figure 19-3. In this dialog box, browse and select the inventor part file of the model to be imported into the Mold environment.

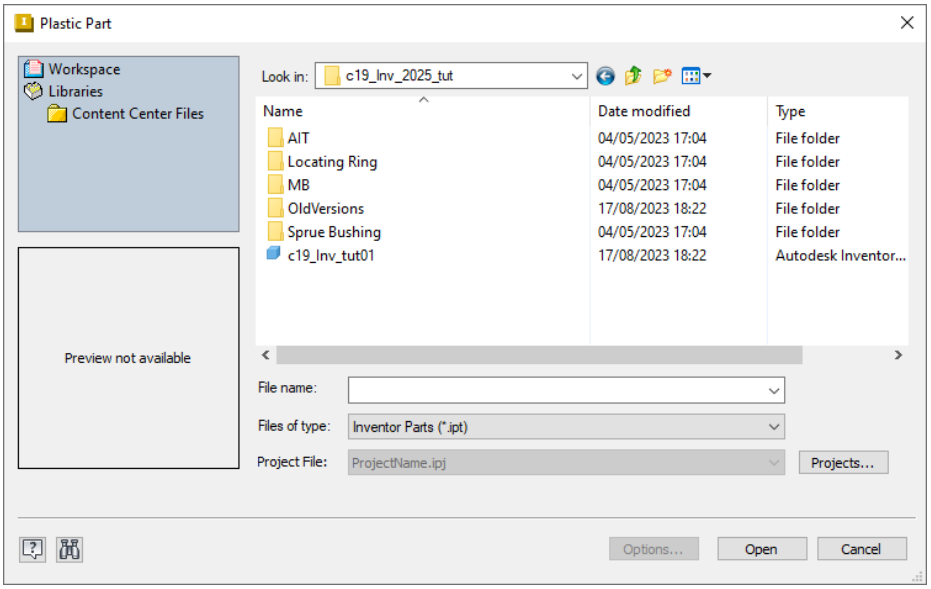

Figure 19-3 *The* ***Plastic Part*** *dialog box*

Now, choose the **Open** button from the dialog box; the preview of the model will be displayed in the drawing area. Also, the cursor will change in a plastic part place icon . You can now align the part with references such as **Part_Centroid**, **Part_CSYS**, or **Work Reference**. To align the part, right-click in the drawing area; a shortcut menu will be displayed, as shown in Figure 19-4. By default, the **Align with Part_Centroid** option is chosen in the shortcut menu. So, the plastic part to be placed is automatically aligned to the **Part_Centroid**. To align the plastic part to the part coordinate system, choose the **Align with Part_CSYS** option from the shortcut menu. To align the part with the work reference, choose the **Align with Work Reference** option from the shortcut menu and click once in the graphics window; the **Plastic Part** process box will be displayed and the plastic part will be aligned with the work reference available in the part to be inserted.

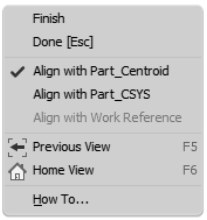

Figure 19-4 *The shortcut menu displayed on right-clicking*

Adding Core and Cavity by using Individual Models

In this method, you will add core and cavity to models. To do so, choose the **Place Core and Cavity** tool from the **Plastic Part** drop-down; the **Place Core and Cavity** dialog box will be displayed, refer to Figure 19-5. Click on the **Place Component** button adjacent to the **Core File** edit box; the **Place Component** dialog box will be displayed, as shown in Figure 19-6. In this dialog box, browse and select the file to be added as core. Similarly, place the cavity model by using the desired file.

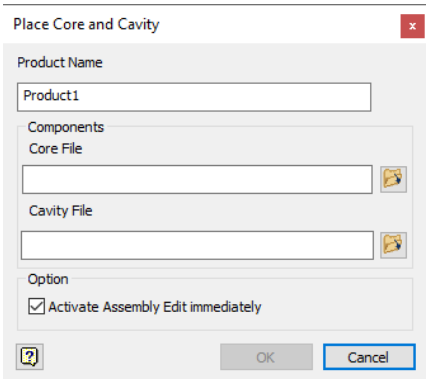

Figure 19-5 *The* ***Place Core and Cavity*** *dialog box*

Tip

Core is the part of mold which has pin and impressions to give desired shape to the solidifying material. Cavity is that part of mold in which the molten material will be poured.

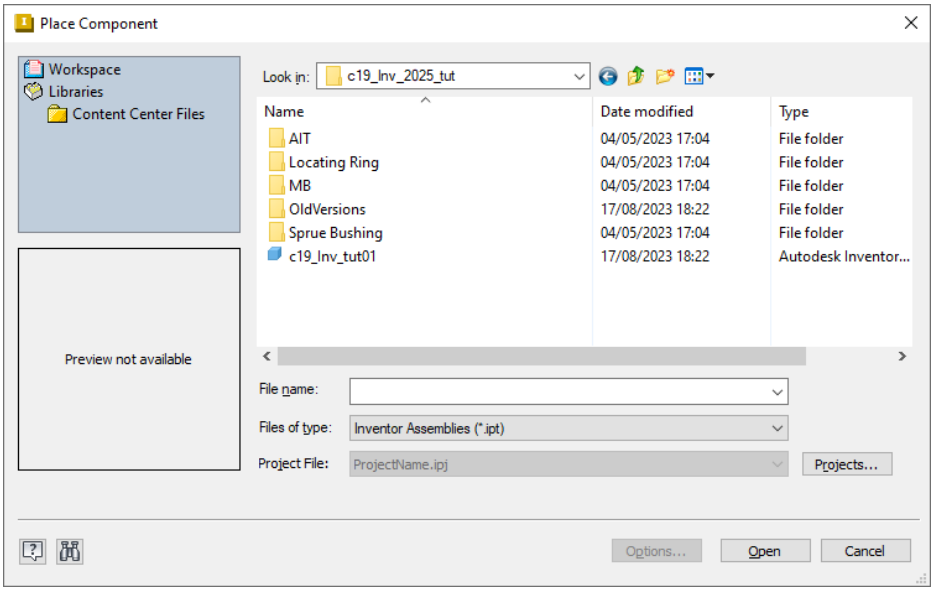

Figure 19-6 *The* ***Place Component*** *dialog box*

ADJUSTING ORIENTATION AND POSITION OF A PART

After placing the part, you can orient or position it by using the tools available in the **Adjust Orientation** drop-down. There are two tools available in this drop-down: **Adjust Orientation** and **Adjust Position**. The procedure to adjust orientation of the part is discussed next.

Adjusting Orientation of the Part

To adjust the orientation of the part, choose the **Adjust Orientation** tool from the **Adjust Orientation** drop-down in the **Mold Layout** panel of the **Mold Layout** tab in the **Ribbon**; the **Adjust Orientation** dialog box will be displayed, as shown in Figure 19-7 and you will be prompted to select the plastic part. Select the part; the opening direction will be displayed on the part, refer to Figure 19-8.

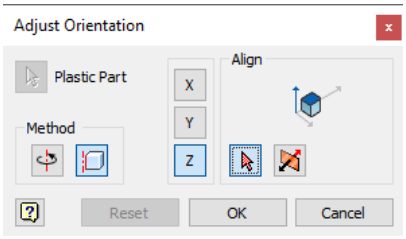

Figure 19-7 *The **Adjust Orientation** dialog box*

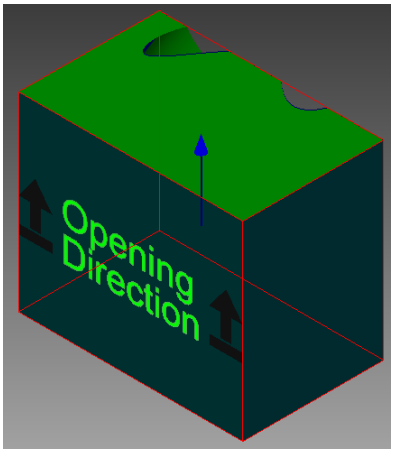

Figure 19-8 *Preview of the object with opening direction displayed*

You can change the orientation of the part by using the options available in the **Adjust Orientation** dialog box. The options in this dialog box are discussed next.

Plastic Part

This button is used to select the plastic part. If the part is already selected, then this button will not be active.

Method Area

There are two buttons available in this area: **Rotate around Axis** and **Align with Axis**. Choose the **Rotate around Axis** button if you want to rotate the plastic part around an axis. If you want to move the plastic part along an axis then choose the **Align with Axis** button from this area.

X/Y/Z

There are three buttons that are used to change the axis around which the part is to be rotated or along which the part is to be moved. These buttons act as toggle buttons. You can select any of the three buttons at a time.

Align Area

There are two buttons available in this area: **Select edge or surface** and **Flip moldable part**. The **Select edge or surface** button is used to select an edge or a face to align the opening direction of the part. The **Flip moldable part** button is used to reverse the direction of part.

Reset

This button is used to reset the part to its original orientation.

After adjusting the orientation of the part, choose the **OK** button from the dialog box.



Note

*The **Adjust Orientation** tool cannot be used for orienting individually added core and cavity. In such cases, an error message will be displayed stating that there is no moldable part.*

Adjusting Position of the Part

To adjust the position of the part, choose the **Adjust Position** tool from the **Adjust Orientation** drop-down; the **Adjust Position** dialog box will be displayed, as shown in Figure 19-9. The options in this dialog box are discussed next.

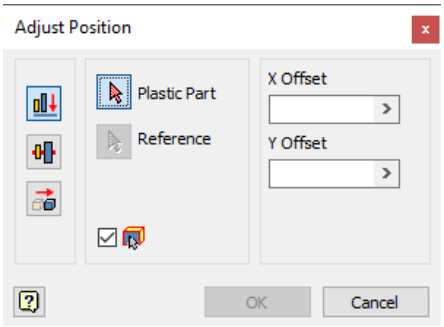

Figure 19-9 *The **Adjust Position** dialog box*

Align XY Plane with Reference

This button is used to adjust the position of the part along X-axis and Y-axis. This button is chosen by default. As a result, the **X Offset** and **Y Offset** edit boxes will be displayed in the dialog box. Specify the distance value along the X axis and Y axis in the respective edit boxes and then choose the **OK** button from the dialog box; the part will move to the specified location.

Align Center with X/Y Direction

This button is used to adjust the position of the part along X or Y direction through its center. On choosing this button, the **X** and **Y** buttons will become available. Choose the **X** button if you want to align center of the part along the **X** axis; the **X Offset** edit box will be displayed. Specify the value of distance in the edit box and then choose the **OK** button; the part will move by the specified distance along the X direction. If you want to align center of the part along the Y axis then choose the **Y** button from the dialog box. On doing so, the **Y Offset** edit box will be displayed. Specify the value of distance in the edit box and then choose the **OK** button; the part will be moved by the specified distance.

Free Transform

This button is used to move the part along all the three axes. On choosing this button, the **X Offset**, **Y Offset** and **Z Offset** edit boxes will be displayed, refer to Figure 19-10. You can specify the value of offset along the X, Y, and Z axes in the edit boxes.

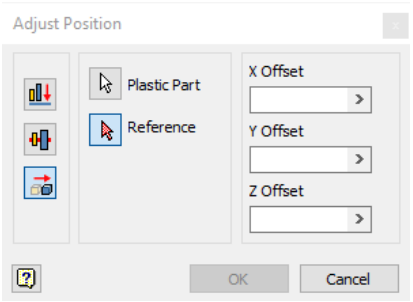

Figure 19-10 *The* ***Adjust Position*** *dialog box with the* ***Free Transform*** *button chosen*

CREATING CORE AND CAVITY FOR THE PART

You can create core and cavity for the part by using the **Core/Cavity** tool. To do so, choose the **Core/Cavity** tool from the **Mold Layout** panel in the **Mold Layout** tab of the **Ribbon**; the **Core/Cavity** dialog box will be displayed. Select the required mold design and choose **OK**; the **Core/Cavity** contextual tab will get added to the **Ribbon**, refer to Figure 19-11. The tools in this tab are discussed next.

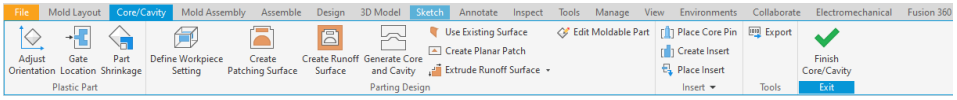

*Figure 19-11 The **Core/Cavity** contextual tab*

Adjusting Orientation

You can adjust the orientation of the part by using the **Adjust Orientation** tool from the **Core/Cavity** contextual tab. Details of this tool have already been discussed in this chapter.

Specifying Gate Location



You can specify the location of the gate by using the **Gate Location** tool. To do so, choose the **Gate Location** tool from the **Plastic Part** panel in the **Core/Cavity** tab of the **Ribbon**; the **Gate Location** dialog box will be displayed, as shown in Figure 19-12.

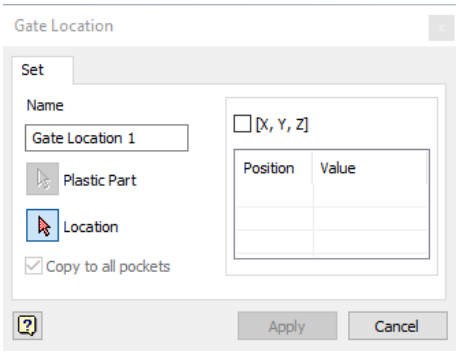

*Figure 19-12 The **Gate Location** dialog box*

Set Tab

The options in this tab are used to manually set the location of the gate. The options in this tab are discussed next.

Name

This edit box is used to specify a name for the gate location.

Plastic Part

This button will be active only if there are multiple parts in the file. To select a plastic part, choose the **Plastic Part** button; you will be prompted to select a part. Select the part; the selected part will be used to set the location of gate.

Location

This button is used to specify the location of the gate. To specify the location of the gate, choose this button; a point mark will be attached to the cursor and you will be prompted to select a gate location. Click on the part to specify the location of the gate; the coordinates of the specified location will be displayed in the right of the dialog box.

[X, Y, Z]
This check box is used to show the value of coordinates in terms of X, Y, and Z values. By default, the coordinates of the gate location point are displayed in terms of U and V values.

After specifying the gate location point, as shown in Figure 19-13, choose the **Apply** button; the gate location point will be placed. Choose the **Done** button from the dialog box to exit.

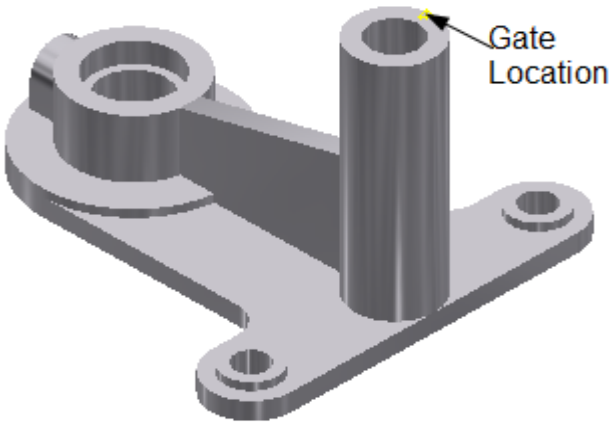

Figure 19-13 *The Gate Location mark on the part*

Specifying Shrinkage Allowance



During the molding process, when the material starts cooling in the mold, it starts shrinking as well. You need to specify this shrinkage allowance in the mold before you start filling the mold with material. To specify the shrinkage allowance, choose the **Part Shrinkage** tool from the **Plastic Part** panel in the **Core/Cavity** contextual tab of the **Ribbon**; the **Part Shrinkage** dialog box will be displayed, refer to Figure 19-14.

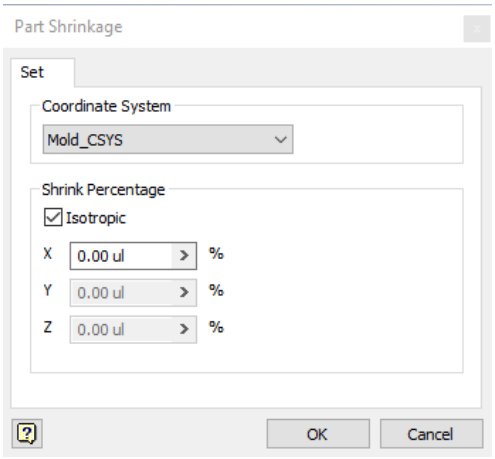

Figure 19-14 *The **Part Shrinkage** dialog box*

Set Tab

The options in this tab are used to specify the co-ordinate system and percentage of shrinkage in the material during the molding process. The options in this dialog box are discussed next.

Coordinate System

The options in this drop-down list are used to specify the coordinate system corresponding to which the shrinkage will be defined. By default, there are three options in this drop-down list, **Mold_CSYS**, **Part_CSYS**, and **Specify UCS**. Using the **Specify UCS** option, you can specify a new coordinate system.

Shrink Percentage

The options in this area are used to specify the percentage of shrinkage in the material during the molding process. By default, the **Isotropic** check box is selected. So, the shrinkage value specified in the **X** edit box will also be applied in the **Y** and **Z** edit boxes. If you clear this check box, then you can specify the different values of shrinkage in the **X**, **Y**, and **Z** edit boxes.

Defining Workpiece



After specifying the parameters related to the workpiece, now you need to specify the workpiece in which the mold will be created. To define the workpiece, choose the **Define Workpiece Setting** tool from the **Parting Design** panel of the **Core/Cavity** contextual tab in the **Ribbon**; the **Define Workpiece Setting** dialog box will be displayed, as shown in Figure 19-15. The options in this dialog box are discussed next.

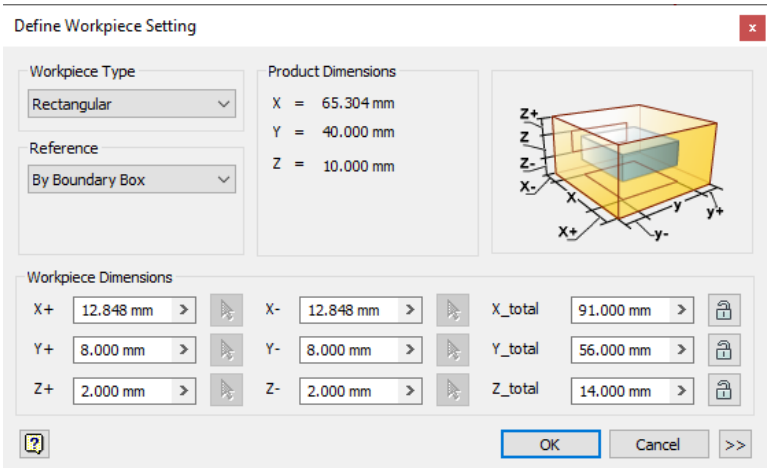

Figure 19-15 *The* ***Define Workpiece Setting*** *dialog box*

Workpiece Type

Using the options in this drop-down list, you can specify the shape of the workpiece. There are two options in this drop-down list: **Rectangular** and **Cylinder**. The **Rectangular** option is used to create a cuboid workpiece. The **Cylinder** option is used to create a cylindrical workpiece.

Reference

Using the options in this drop-down list, you can specify the boundaries of the workpiece. There are two options in this drop-down list: **By Boundary Box** and **By References**. The **By Boundary Box** option is used to specify the boundary of the workpiece by specifying values. If you want to specify boundary of the workpiece by selecting references, then choose the **By References** option from the drop-down list. On doing so, the **Multiple references** check box will be activated. On selecting this check box, you can select references for the boundary. If you clear this check box, then the boundary is defined by only one reference.

Chamfer or Fillet

These options are available in the expanded **Define Workpiece Setting** dialog box, refer to Figure 19-16. To display the expanded **Define Workpiece Setting** dialog box, select the **Rectangular** option from the **Workpiece Type** drop-down list and then choose the **>>** button from the **Define Workpiece Setting** dialog box. There are two buttons available in the expanded dialog box: **Chamfer** and **Fillet**. If you choose the **Chamfer** button, the corners of the workpiece will get chamfered. Select the check box corresponding to the corner to be chamfered; the edit box adjacent to the selected check box will become active. Specify the value of chamfer in the edit box; the corner will be chamfered by the specified value. Similarly, you can apply fillet by choosing the **Fillet** button.

After specifying the desired options, choose the **OK** button from the dialog box; the workpiece will be created.

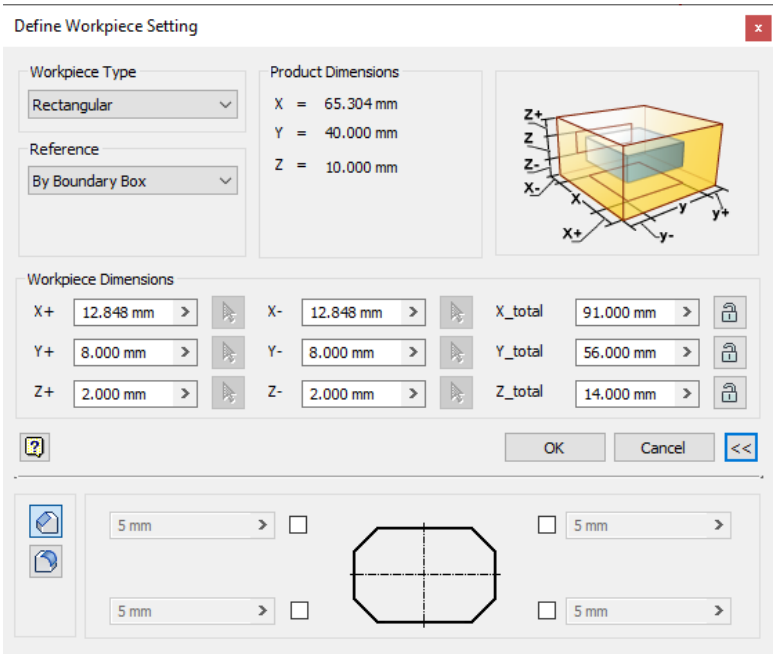

Figure 19-16 *The expanded* ***Define Workpiece Setting*** *dialog box*

Creating Patching Surface



After defining the workpiece, you need to create the patching surface for the mold to restrict the flow of material in the desired areas. To create the patching surface, choose the **Create Patching Surface** tool from the **Parting Design** panel of the **Core/Cavity** contextual tab in the **Ribbon**; the **Create Patching Surface** dialog box will be displayed, as shown in Figure 19-17. You can use the **Auto Detect** button to create the patches automatically. To do so, choose the **Auto Detect** button available at the top of the dialog box; the possible patches will be created automatically and will be displayed in the list. You can specify the patches manually also. To do so, select the **Click to add** option displayed in the list; you will be prompted to select edges to create a patch surface. Select the edges of the surface where you want to create the patch surface. The selected edges will be displayed in the **Loop** area of the dialog box. You can add more than one patching surfaces. To do so, select the **Click to add** option again. Choose the **OK** button after specifying the desired patching surfaces; the created patching surfaces will be displayed in brown color.

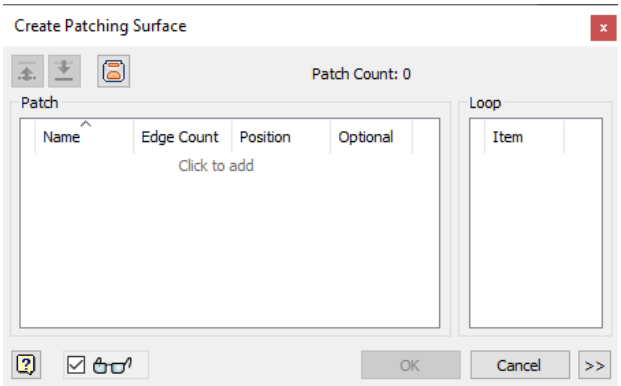

Figure 19-17 *The* ***Create Patching Surface*** *dialog box*

Creating Planar Patches

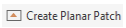

You can also create patches manually using the **Create Planar Patch** tool. To do so, choose the **Create Planar Patch** tool from the **Parting Design** panel in the **Core/Cavity** tab of the **Ribbon**; the **Create Planar Patch** dialog box will be displayed, as shown in Figure 19-18. Also, you will be prompted to select one or more connected edges. Select the edges and then choose the **Apply** button to create the patch. Select more edges if you want to create more patches and then choose the **OK** button to exit the dialog box.

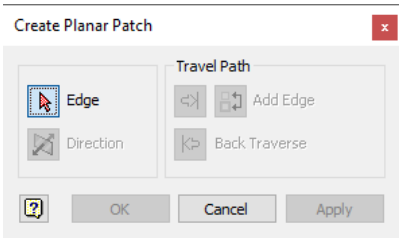

Figure 19-18 *The* ***Create Planar Patch*** *dialog box*



Note

You can create a patching surface before defining the workpiece.

Creating Runoff Surface



The runoff surface is used for parting the core and the cavity. The runoff surface can be created only after defining the workpiece. To create a runoff surface, choose the **Create Runoff Surface** tool from the **Parting Design** panel in the **Core/Cavity** tab of

the **Ribbon**; the **Create Runoff Surface** dialog box will be displayed, as shown in Figure 19-19. Now, you can either manually specify the runoff surface or the location of the runoff surface can be suggested by Inventor. To manually specify the location of the runoff surface, select an edge on the model; the plane will be created as runoff surface.

To automatically specify the location of the runoff surface, choose the **Auto Detect** tool from the top of the dialog box; the preview of the runoff surface will be displayed in the modeling area. Choose the **OK** button from the dialog box to accept the results; the runoff surface will be created and displayed in the modeling area.

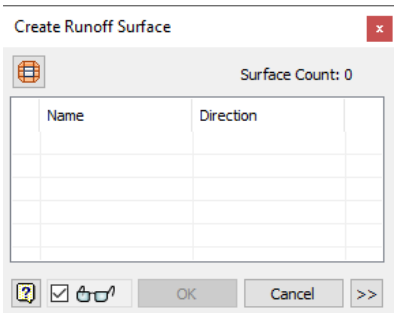

Figure 19-19 *The* ***Create Runoff Surface*** *dialog box*

Generating Core and Cavity



After creating the workpiece and specifying the runoff surface, you can generate core and cavity for the part. To do so, choose the **Generate Core and Cavity** tool from the **Parting Design** panel in the **Ribbon**; the **Generate Core and Cavity** dialog box will be displayed, as shown in Figure 19-20. In the **Opacity Settings** area of the dialog box, you can change the color of the cavity and the core by using the buttons available next to their name in the area. You can change the opacity of color of the core and cavity by using the sliders available next to their respective color buttons. These sliders will be activated only after choosing the **Preview/Diagnose** button. The method to display the preview of the core and cavity is discussed next.

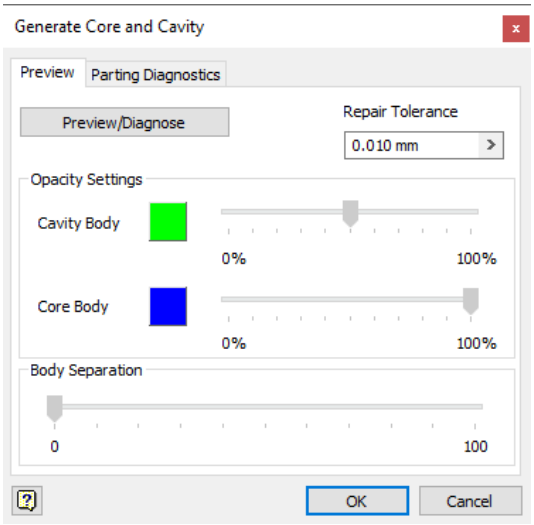

Figure 19-20 *The* ***Generate Core and Cavity*** *dialog box*

Previewing/Diagnosing the Core and Cavity

You can preview/diagnose the core and cavity by using the **Preview/Diagnose** button available at the top of the dialog box in the **Preview** tab. Choose this button to preview the core and cavity; the core and cavity will be displayed in the specified colors, refer to Figure 19-21. Also, the sliders available in the dialog box will be activated. Using the **Body Separation** slider, you can preview the core and cavity in a separated position, refer to Figure 19-22. Choose the **OK** button from the dialog box to accept the core and cavity or you can see the result by choosing the **Parting Diagnostics** tab from the dialog box. Figure 19-23 shows diagnostics of a core and cavity.

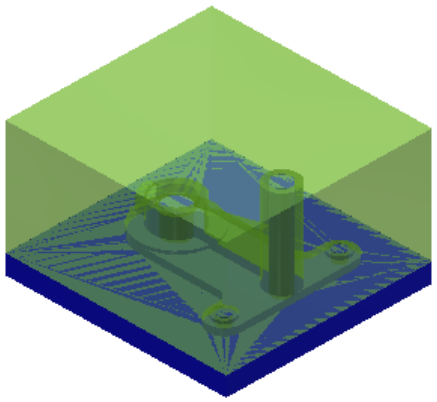

Figure 19-21 *Preview of the core and cavity*

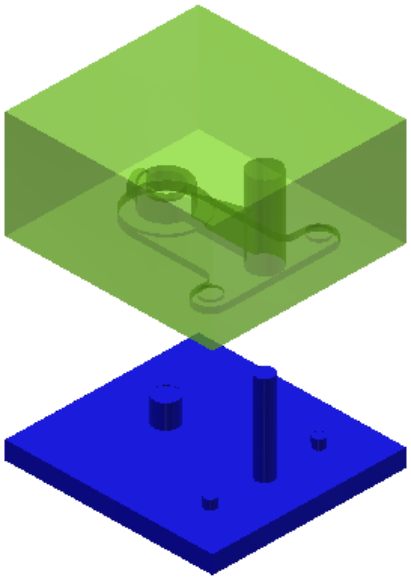

Figure 19-22 *Preview of separated core and cavity*

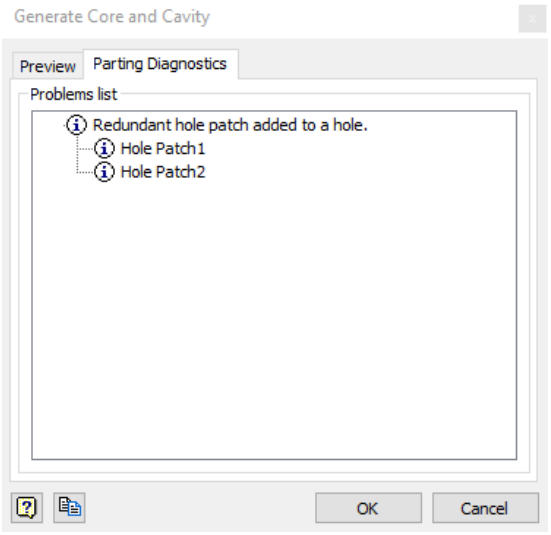

Figure 19-23 *Parting diagnostics of the core and cavity*

Choose the **OK** button from the **Generate Core and Cavity** dialog box to generate the core and cavity of the part, refer to Figure 19-24.

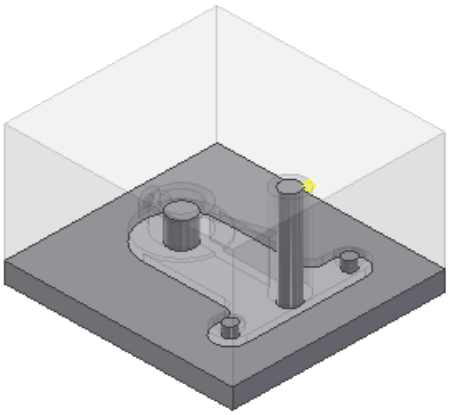

Figure 19-24 *The core and cavity of the part*

After generating the core and the cavity, choose the **Finish Core/Cavity** tool from the **Exit** panel in the **Core/Cavity** contextual tab of the **Ribbon**; the core and cavity will be displayed.

Now, you need to create a runner in the mold to facilitate the flow of plastic in the mold.

CREATING PATTERN OF THE MOLD

In a molding machine, multiple molds are created at a time. So, you need to create pattern of the mold in Inventor to facilitate this type of process. To create pattern of the mold, choose the **Pattern** tool from the **Mold Layout** panel in the **Mold Layout** tab of the **Ribbon**; the **Pattern** dialog box will be displayed. These are three tabs in this dialog box: **Rectangular**, **Circular**, and **Variable**. These tabs are used to create rectangular, circular and variable patterns, respectively. The methods to create these patterns are discussed next.

Creating a Rectangular Pattern

To create a rectangular pattern, choose the **Rectangular** tab in the dialog box; the **Pattern** dialog box will be displayed, as shown in Figure 19-25. By default, the **Base Pattern** button is chosen in the **Pattern Type** area of the dialog box. Now, you need to specify the number in the instances of the mold in the edit boxes available in the **X Direction** and **Y Direction** areas. You can also specify the distance between the two instances along the X and Y axes by using the edit boxes available in the **X Direction** and **Y Direction** areas. You can also change the orientation of the mold along the X axis or Y axis by using the **X Balance** and **Y Balance** buttons available in the **Pattern Type** area of the dialog box.

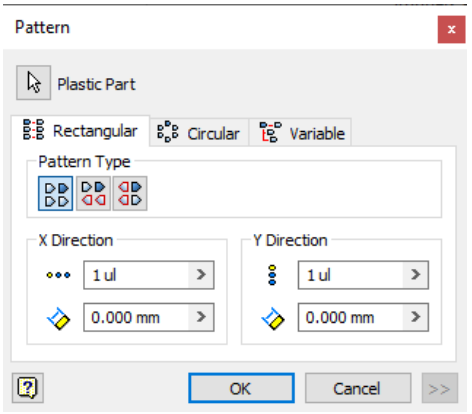

Figure 19-25 *The* ***Pattern*** *dialog box*

Creating a Circular Pattern

To create a circular pattern, choose the **Circular** tab from the dialog box; the **Pattern** dialog box will be modified, as shown in Figure 19-26. Specify the number of instances in the edit box available in the **Circular** area displaying the value as 1. Similarly, you can specify the value of angular distance, angular offset, and distance between the instances in the respective edit boxes in **Circular** area of the dialog box. As you specify the values in the edit boxes, the preview of the specified parameters is displayed in the modeling area.

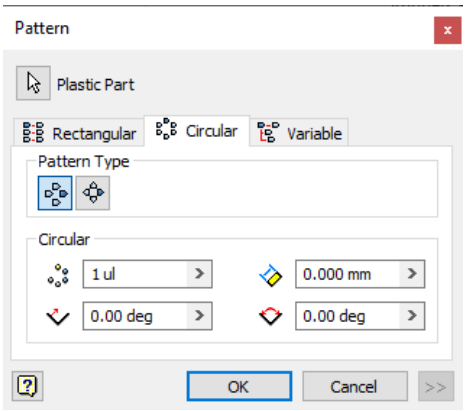

Figure 19-26 *The* ***Pattern*** *dialog box with the* ***Circular*** *tab chosen*

Creating a Variable Pattern

To create a variable pattern, choose the **Variable** tab from the dialog box; the dialog box will be modified, as shown in Figure 19-27. Right-click in the list displayed in dialog box; a shortcut menu will be displayed, refer to Figure 19-28. To add an instance, choose the **Add** option from the shortcut menu; a new instance of the mold will be added. To specify the parameters of the instances created, click in the corresponding fields of the instances.

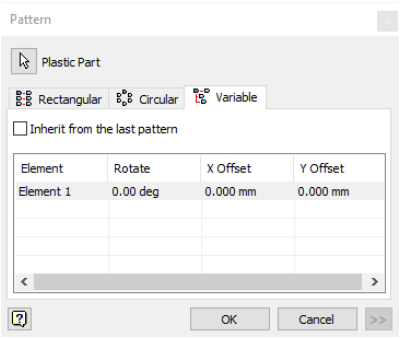

Figure 19-27 *The* ***Pattern*** *dialog box with the* ***Variable*** *tab chosen*

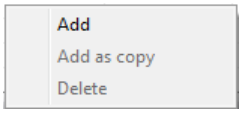

Figure 19-28 *The shortcut menu displayed*

After specifying the desired options, choose the **OK** button from the dialog box; the pattern will be created.

CREATING RUNNER OF THE MOLD

In a molding machine, material is filled in the molds with the help of a passage. This passage is called runner. The runner provides equal amount of material in each of the molds in the molding machine. To add a runner, you need to create a sketch for the runner first. The method to create runner sketch is discussed next.

Creating Runner Sketch



To create a runner sketch, there are two tools available in Autodesk Inventor: **Auto Runner Sketch** and **Manual Sketch**. These tools are available in the **Auto Runner Sketch** drop-down. Using the **Auto Runner Sketch** tool, you can create a runner sketch automatically. To do so, choose the **Auto Runner Sketch** tool; the **Auto Runner Sketch** dialog box will be displayed, refer to Figure 19-29. Choose the desired options from the **Balance** and **Pattern** drop-down lists and then select a reference on the mold to create a sketch for the runner. On doing so, the reference name and the length of the runner sketch is displayed on the right in the dialog box, refer to Figure 19-29. Also, the arrows are displayed on the runner sketch to translate or rotate it, refer to Figure 19-30. Move and rotate the runner sketch as per the

requirement. Next, choose the **OK** button from the dialog box and then choose the **Finish Sketch** button from the **Exit** panel in the **Sketch** contextual tab of the **Mold Layout** tab; the **3D Model** tab will be activated to facilitate modeling of the runner. Choose the **Return** tool from the **Return** panel in the **3D Model** tab of the **Ribbon**; the runner sketch will be created, refer to Figure 19-31.

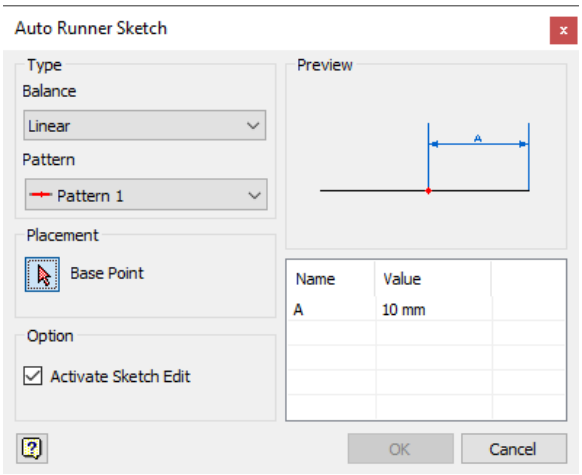

Figure 19-29 *The* ***Auto Runner Sketch*** *dialog box*

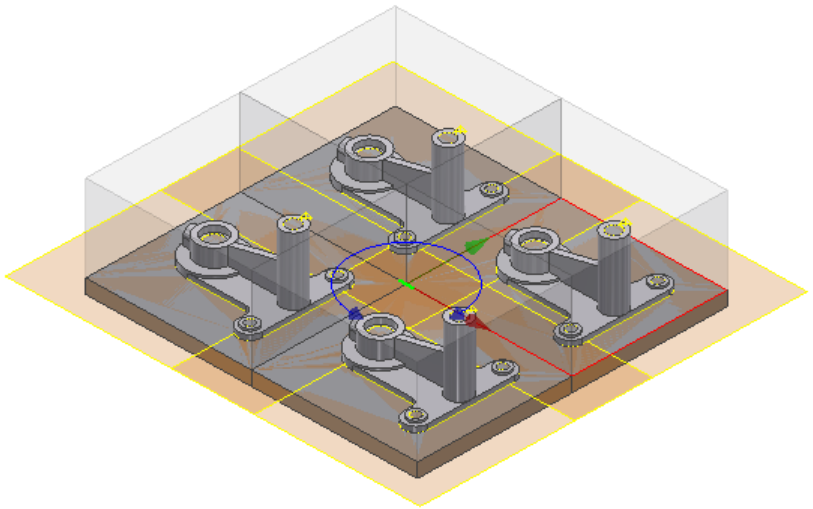

Figure 19-30 *A mold pattern with runner and its arrowheads*

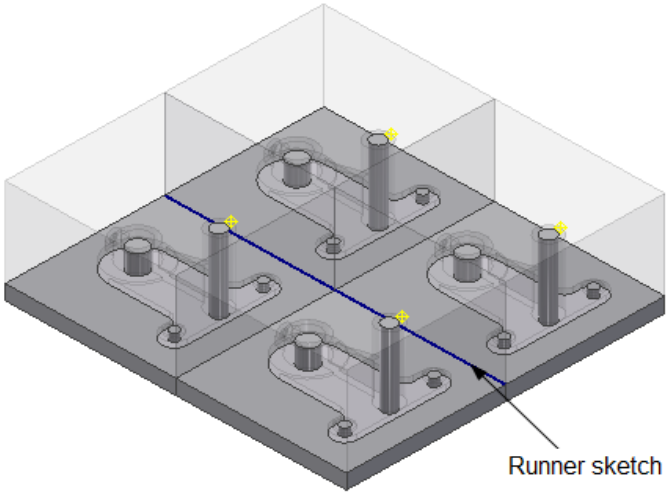

Figure 19-31 *Runner sketch created on the mold pattern*

To create a runner sketch manually, choose the **Manual Sketch** tool from the **Auto Runner Sketch** drop-down in the **Ribbon**; the **Manual Sketch** dialog box will be displayed, as shown in Figure 19-32. Select the **Runner Sketch** radio button from the dialog box if not selected, and then select a reference for drawing the runner sketch. Now, choose the **OK** button from the dialog box; the **Sketch** contextual tab will be displayed in the **Mold Layout** tab and you will be prompted to draw a sketch for the runner. Draw a sketch for the runner and then choose the **Finish Sketch** button from the **Exit** panel in the **Sketch** contextual tab of the **Mold Layout** tab; the **3D Model** tab will be activated to facilitate modeling of the runner. Create the required shape of the runner and then choose the **Return** tool from the **Return** panel in the **3D Model** tab of the **Ribbon**; the runner sketch will be created.

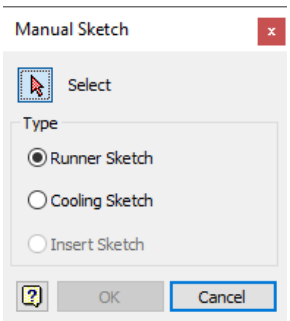

Figure 19-32 *The **Manual Sketch** dialog box*

After drawing a sketch for the runner, you can create a runner for the current mold. The method to create a runner is discussed next.

Creating Runner



To create a runner, choose the **Runner** tool from the **Runner** drop-down in the **Runners and Channels** panel of the **Ribbon**; the **Create Runner** dialog box will be displayed, as shown in Figure 19-33 and you will be prompted to select a sketched curve for the runner. Select the sketched curve and then specify the desired parameters in the dialog box; a preview of the runner will be displayed in the modeling area. Choose the **OK** button from the dialog box to create the runner. Figure 19-34 shows a runner created in the pattern.

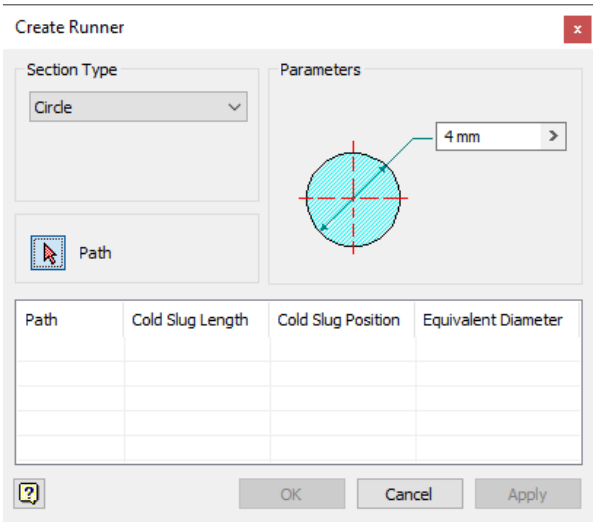

Figure 19-33 *The* ***Create Runner*** *dialog box*

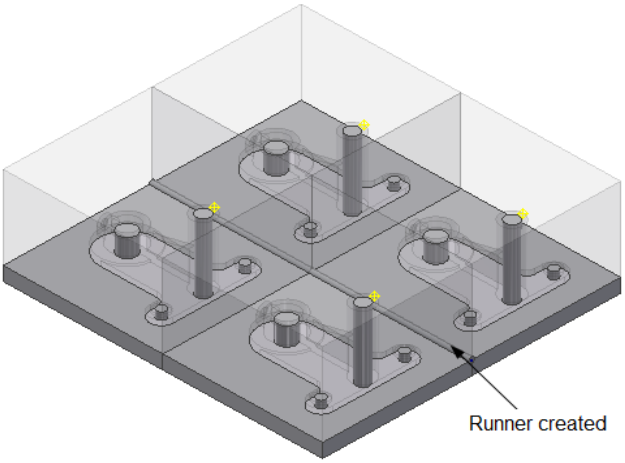

Figure 19-34 *The runner created in the mold pattern*

After creating the runner, you need to add gates to the molds. The method of creating gates is discussed next.

CREATING GATES FOR THE MOLDS



Gates can be created only after specifying the gate locations. To do so, choose the **Gate** tool from the **Runners and Channels** panel in the **Mold Layout** tab; the **Create Gate** dialog box will be displayed, as shown in Figure 19-35 and you will be prompted to select gate locations. Select the gate locations and then choose the **OK** button from the dialog box; the gates will be added at the selected locations. The options in this dialog box are discussed next.

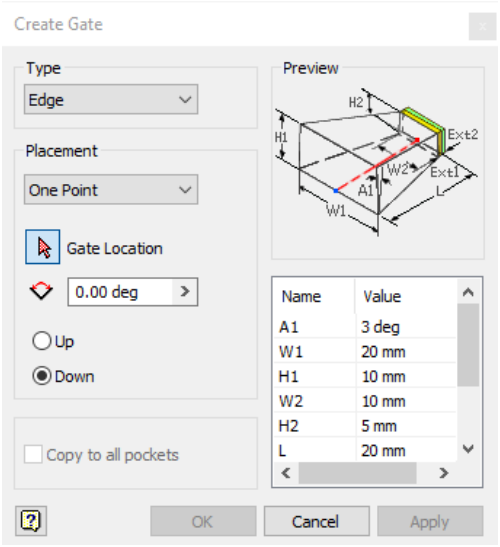

Figure 19-35 *The* ***Create Gate*** *dialog box*

Type

The options in this drop-down list are used to specify the type of gate to be added at the selected gate locations. The options available in this drop-down list are discussed next.

Edge

This option is used to create an edge type gate. This gate type is used to create multi-cavity molds and medium or thick sections. The edge gate is located on the parting line and the part fills from the side, top or bottom.

Fan

This option is used to create fan type gate. This gate type is used to create thick-sectioned moldings and enables slow injection without freeze-off, which is preferred for low stress moldings or where warpage and dimensional stability are factors to be considered.

Pin

This option is used to create pin type gate. This gate type is used with a 3-plate tool because the gate and the part are to be ejected in the opposite direction. The pin type gate is weak and may break while ejecting. This is the most suitable gate to use with thin sections.

Pin Point

This option is used to create pin point type gate. This gate type is used for cylindrical parts. It is easily detachable and saves material.

Submarine

This option is used to create submarine type gate. The submarine gate is used in two-plate mold construction. In this type of gate, tapered tunnel is machined from the end of the runner to the cavity below the parting line.

Flat-Bottom Submarine

This option is used to create a flat bottom submarine type gate. This gate is also used in two plate mold construction.

Tunnel

This option is used to create tunnel type gate. This type of gate is just a variation in the submarine type of gates. In this gate type, the curves at the end are in the form of a half circle.

Sprue

This option is used to create sprue type gate. The sprue type gate is used where single cavity mold is used and symmetry is required in the mold.

Placement

The options in this drop-down list are used to specify the placement of the gate in the mold. There are two options available in this drop-down list: **One Point** and **Two Points**. Select the **One Point** option from the list; you will be prompted to specify the gate location only. Select the **Two Points** option if you also want to specify the end point of the gate.

Copy to all pockets

This check box is used to create the specified gate at all the locations available on the pattern.

ADDING COLD WELLS



During the molding process, the material at the tip of sprue may solidify after one time material injection. This solid material can obstruct the flow of material. To avoid this situation, a cold well is needed in the runner line. To add a cold well, choose the **Cold Well** tool from the **Runners and Channels** panel in the **Mold Layout** tab of the **Mold Layout** tab; the **Cold Well** dialog box will be displayed, as shown in Figure 19-36. You can create two types of cold wells, **Taper** and **Annular**. The options to specify the type are available in the **Type** drop-down list in the dialog box. You can specify the related dimensions in the **Profile** area of the dialog box. After specifying the desired parameters, choose the **Point** button from the **Position** area of the dialog box; you will be prompted to specify the position of the cold well. Select a point on the runner sketch to create the cold well. Choose the **OK** button from the dialog box to exit.

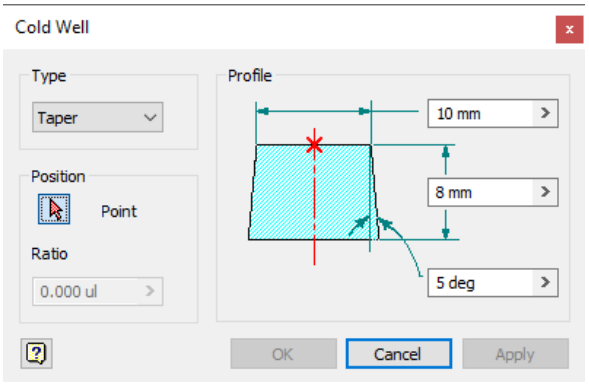

Figure 19-36 *The* ***Cold Well*** *dialog box*

Now, you need to create a mold base to support core and cavity, and to facilitate the molding process in the machine.

ADDING MOLD BASE TO THE ASSEMBLY



After creating core and cavity design, you need to add a mold base to the assembly. To add a mold base, choose the **Mold Base** tool from the **Mold Base** drop-down in the **Mold Assembly** panel of the **Mold Assembly** tab in the **Ribbon**; the **Mold Base** dialog box will be displayed, as shown in Figure 19-37.

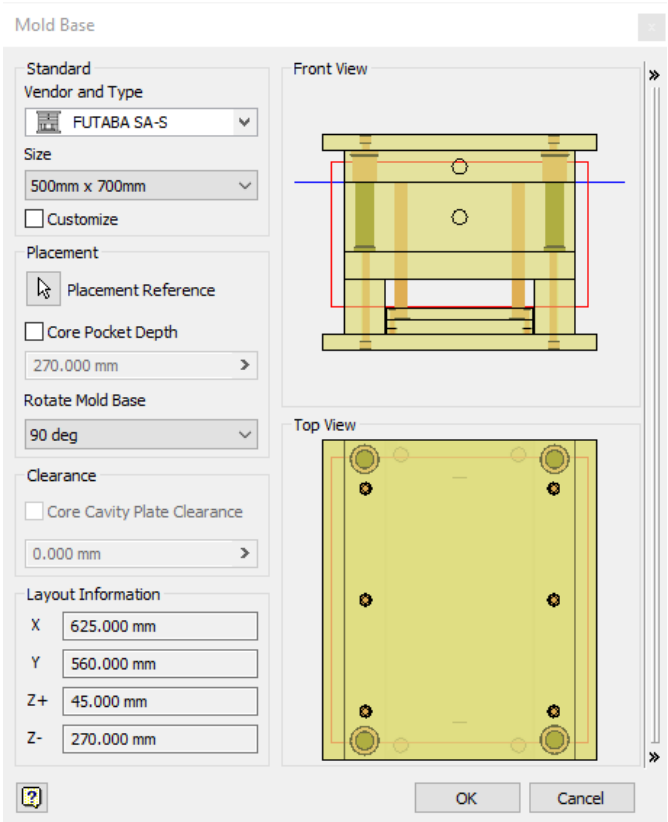

Figure 19-37 *The* ***Mold Base*** *dialog box*

The options in this dialog box are discussed next.

Standard Area

The options in this area are used to specify the type and size of the mold base. These options are discussed next.

Vendor and Type

The options in this drop-down list are used to specify the type and maker of the mold base.

Size

The options in this drop-down list are used to specify the size of the mold base.

Customize

Select this check box to customize the mold base. On doing so, the expanded **Mold Base** dialog box with the **Component** area will be displayed, as shown in Figure 19-38. The options available in the **Component** area are used to customize individual components of the mold base.

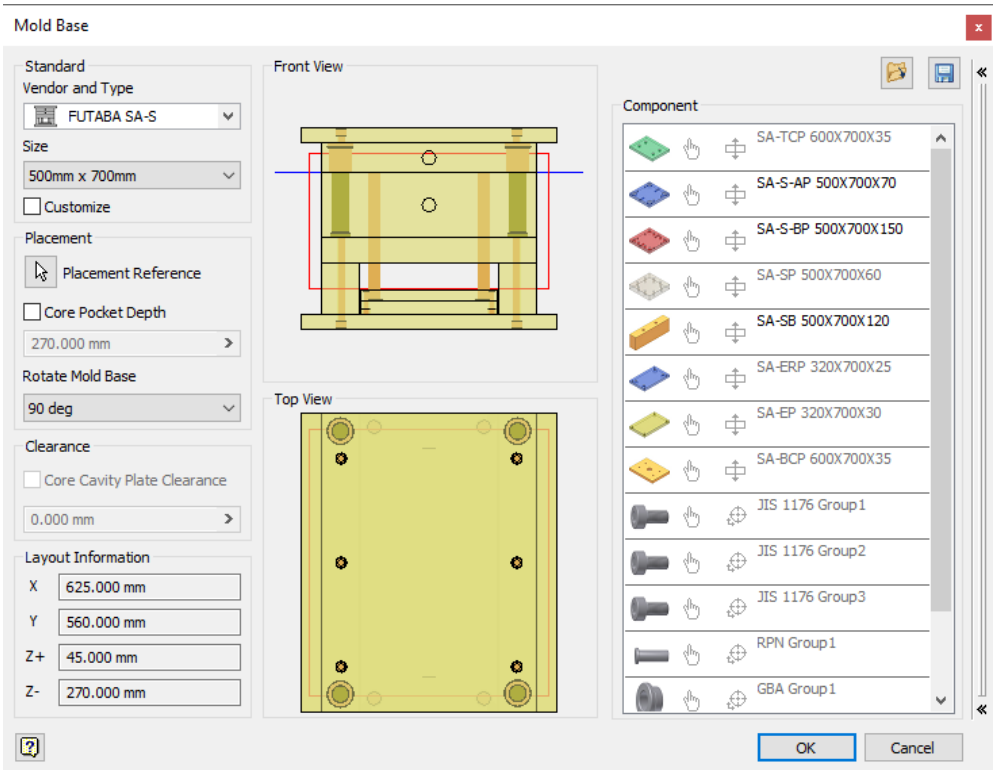

Figure 19-38 *The expanded* ***Mold Base*** *dialog box*

Placement Area

The options in this area are used to specify the position of the mold base. These options are discussed next.

Placement Reference

This button is used to specify the position of the mold base. To specify the position of the mold base, choose this button; you will be prompted to specify the position of the mold base. Select a point in the drawing area; the mold base will be placed.

Core Pocket Depth

This check box is used to specify the depth of the core pocket. On selecting this check box, the edit box below it will be activated. Using this edit box, you can specify the depth of the pocket.

Rotate Mold Base

The options in this drop-down list are used to specify the rotation angle of the mold base.

Layout Information Area

The options in this area are used to display the information regarding the layout of the mold base. After specifying the desired options, choose the **OK** button from the dialog box to create the mold base. Figure 19-39 shows a mold base with core and cavity added.

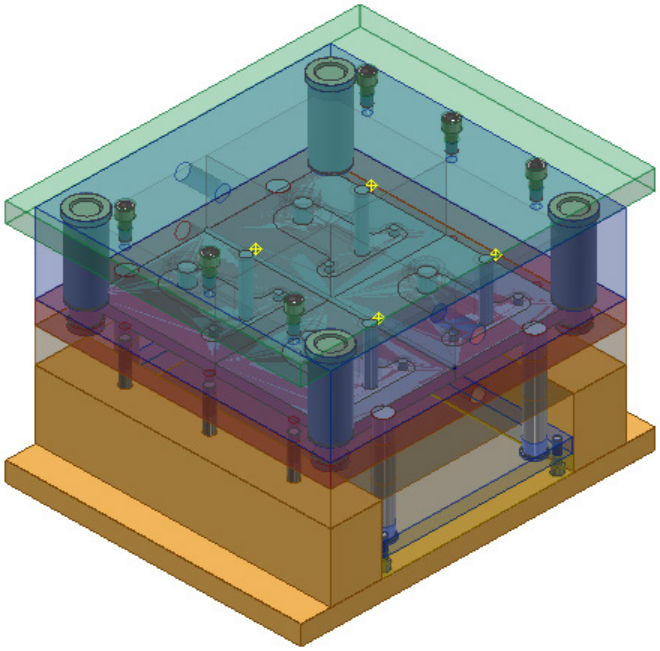

Figure 19-39 *The mold base with core and cavity added*

ADDING SPRUE BUSHING



Sprue bushing is added to the mold base to fill molten plastic in the mold. To add a sprue bushing, choose the **Sprue Bushing** tool from the **Mold Assembly** panel in the **Mold Assembly** tab of the **Ribbon**; the **Sprue Bushing** dialog box will be displayed, as shown in Figure 19-40. Select the desired options from the dialog box and then choose the **Point** button to specify the position of the sprue bushing. Click at the middle of the runner line in the mold; the sprue bushing will be created. You can specify the desired parameters for the sprue bushing by using the options available in the table at the bottom right of the dialog box. Now, choose the **OK** button from the dialog box; the sprue bushing will be created at the specified position.

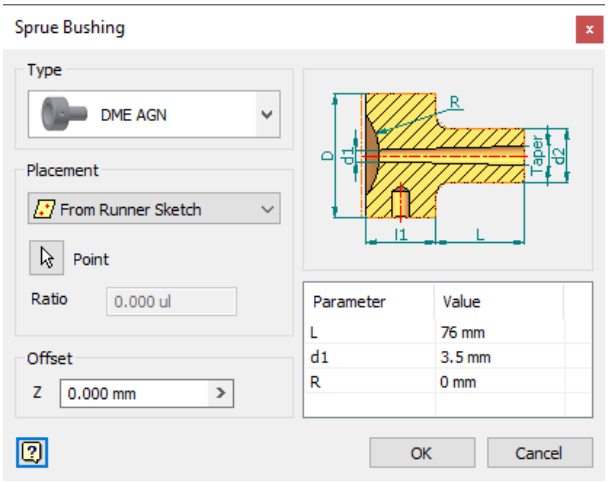

Figure 19-40 *The* ***Sprue Bushing*** *dialog box*

ADDING COOLING CHANNEL



Due to the repetitive use of molds, the system gets heated and can disturb the quality of the object to be molded. To avoid this situation, a cooling channel is required in the mold. To create a cooling channel, choose the **Cooling Channel** tool from the **Runners and Channels** panel in the **Mold Layout** tab of the **Ribbon**; the **Cooling Channel** dialog box will be displayed, refer to Figure 19-41. Also, you will be prompted to select a face on which the cooling channel will be created. Select a face; you will be prompted to specify references for constraining the cooling channel, refer to Figure 19-42. Select the two references and then specify the desired parameters using the options available in the **Drill Point** and **Extents** areas of the dialog box.

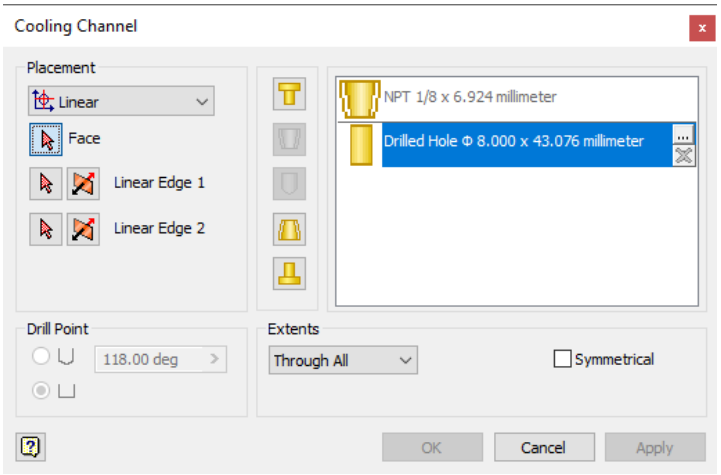

Figure 19-41 *The* ***Cooling Channel*** *dialog box*

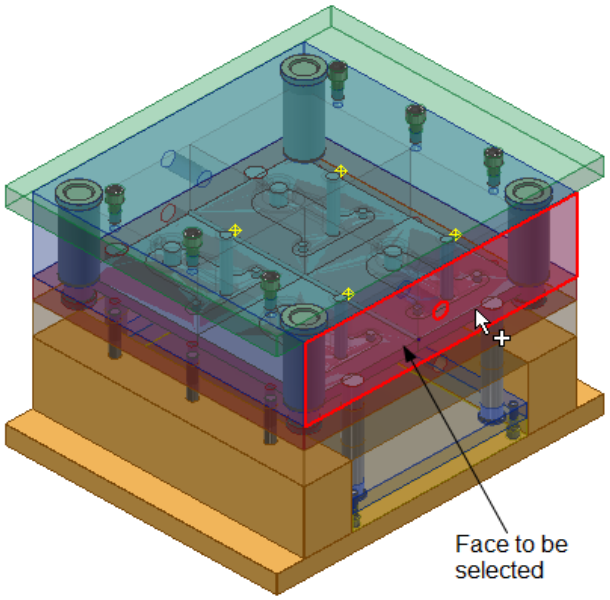

Figure 19-42 *The face selected for cooling channel*

GENERATING DRAWING VIEWS



After creating the complete mold system, you need to create the drawing views of the system so that they can be used for manufacturing. Before generating the drawing views, make sure that you have saved the file. You can generate the drawing views by using the **2-D Drawing** tool from the **2-D Drawing** panel in the **Mold Assembly** tab of the **Ribbon**. To generate the drawing views, choose the tool from the **Ribbon**; the **2-D Drawing** dialog box will be displayed, as shown in Figure 19-43. Select the check boxes adjacent to the parts of the molding system for which you want to generate the drawing views. Choose the **OK** button from the dialog box; the drawing files will be generated as per the selection in the dialog box and will be displayed in Inventor as tabs at the bottom.

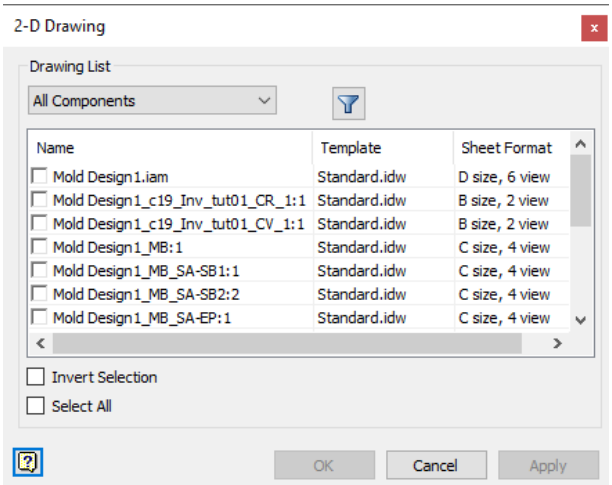

Figure 19-43 *The* ***2-D Drawing*** *dialog box*

TUTORIAL

Tutorial 1

In this tutorial, you will create molding system for the model shown in Figure 19-44. Also, you will analyze the filling of material in the mold. **(Expected time: 45 min)**

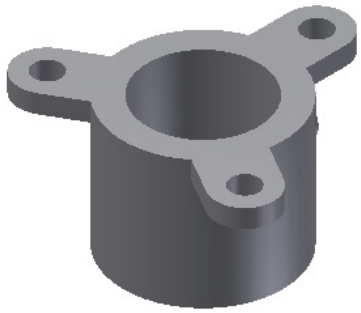

Figure 19-44 *Model for mold design*

The following steps are required to complete this tutorial:

a. Download the input file.
b. Start a new mold design file and import the plastic part.
c. Generate core and cavity.
d. Add gates at the gate locations
e. Add sprue with locating ring to the mold base.
f. Create cooling channel.

Downloading the File

You need to download the input file of this chapter from *www.cadcim.com*.

1. Download the zipped file from *www.cadcim.com*. The complete path for downloading the file is:

   Textbooks > CAD/CAM > Autodesk Inventor > Autodesk Inventor Professional 2025 for Designers > Input files

2. Extract the downloaded input file as Tutorial1_mold. Next, copy the file and paste at the following location *C:\Inventor_2025\c19*.

Starting a New Mold Design File

1. Invoke the **Create New File** dialog box and then choose the **Metric** tab from it.

2. Double-click on the **Mold Design (mm).iam** option; the **Create Mold Design** dialog box will be displayed, as shown in Figure 19-45.

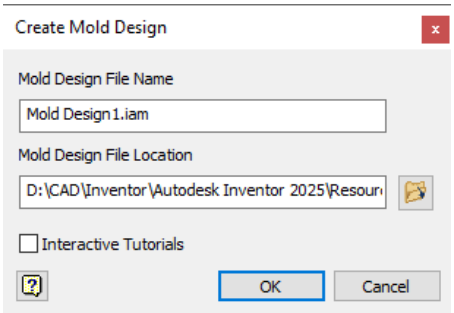

Figure 19-45 *The* ***Create Mold Design*** *dialog box*

3. Specify the name as *Tutorial1* in the **Mold Design File Name** edit box and the location as *C:\Inventor_2025 \c19* in the **Mold Design File Location** edit box. Next, choose the **OK** button from the dialog box; the user interface of the mold design will be displayed.

Importing a Plastic Part in the Drawing

Now, you need to add a plastic part for which the mold will be designed.

1. Choose the **Plastic Part** tool from the **Plastic Part** drop-down in the **Mold Layout** panel of the **Mold Layout** tab in the **Ribbon**; the **Plastic Part** dialog box is displayed, as shown in Figure 19-46.

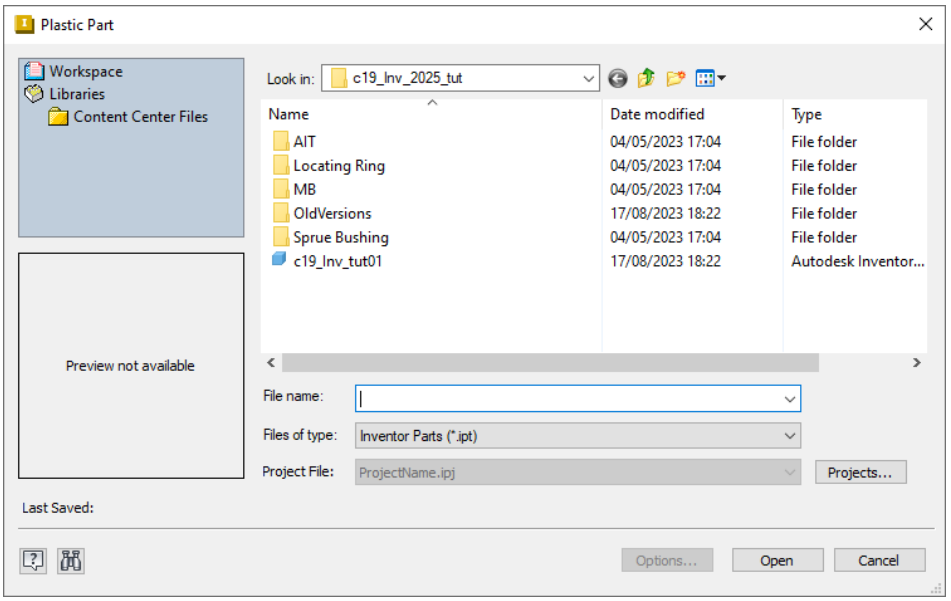

Figure 19-46 *The* ***Plastic Part*** *dialog box*

2. Browse to the file location *C:\Inventor_2025\c19* and select the file with the name *Tutorial1_mold*.

3. Choose the **Open** button from the dialog box; the preview of the part is displayed in the modeling area.

4. Click anywhere in the graphics window to place the part.

Specifying Gate Location on the Part

Now, you will specify a gate location on the part to fill material in the cavity.

1. Choose the **Core/Cavity** tool from the **Mold Layout** panel in the **Mold Layout** tab of the **Ribbon**; the **Core/Cavity** contextual tab is displayed.

2. Choose the **Gate Location** tool from the **Plastic Part** panel in the contextual tab; the **Gate Location** dialog box is displayed, as shown in Figure 19-47.

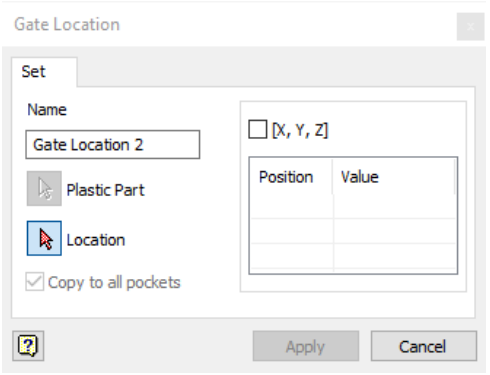

Figure 19-47 *The* ***Gate Location*** *dialog box*

3. Select a point on the part, as shown in Figure 19-48 and then choose the **Apply** button from the dialog box.

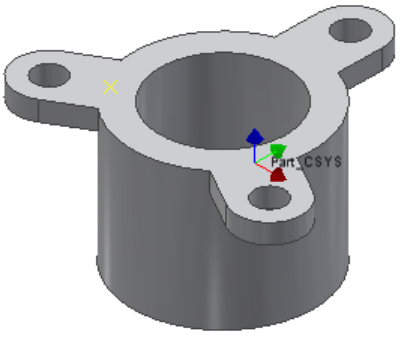

Figure 19-48 *Point specified for gate location*

4. Similarly, specify two more points on the part, as shown in Figure 19-49 and then choose the **Done** button from the dialog box.

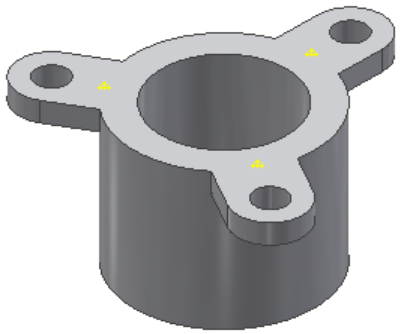

Figure 19-49 *Total points specified for gate location*

Defining a Workpiece

Now, you will define a workpiece for the part. This workpiece is used to create core and cavity.

1. Choose the **Define Workpiece Setting** tool from the **Parting Design** panel in the **Core/Cavity** tab of the **Ribbon**; the **Define Workpiece Setting** dialog box is displayed, as shown in Figure 19-50.

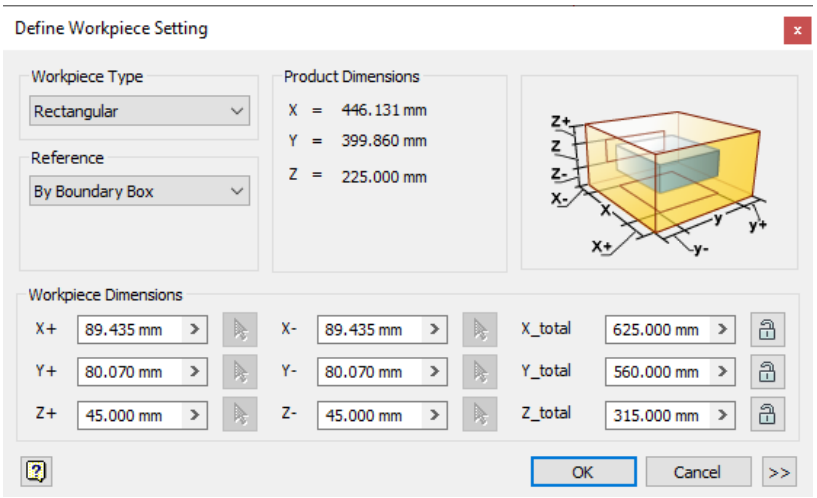

Figure 19-50 *The* ***Define Workpiece Setting*** *dialog box*

2. Select the **Rectangular** option from the **Workpiece Type** drop-down list in the dialog box; preview of the workpiece is displayed in the modeling area, refer to Figure 19-51.

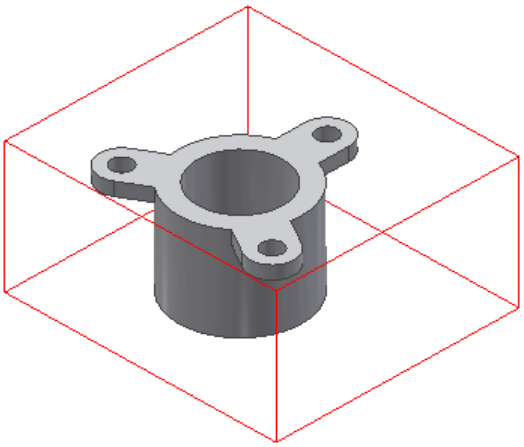

Figure 19-51 *Preview of the workpiece displayed*

3. Choose the **OK** button from the dialog box; the workpiece is created, refer to Figure 19-52.

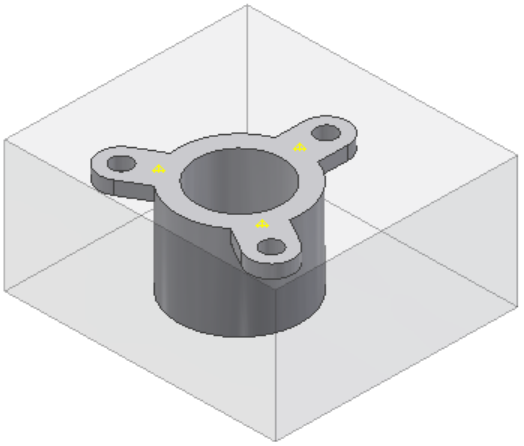

Figure 19-52 *The workpiece created*

Creating Patching Surfaces

Now you will create the patching surface. Patching surfaces are used to restrict the flow of melt in the desired locations.

1. Choose the **Create Patching Surface** tool from the **Parting Design** panel in the **Core/Cavity** contextual tab of the **Ribbon**; the **Create Patching Surface** dialog box is displayed, as shown in Figure 19-53.

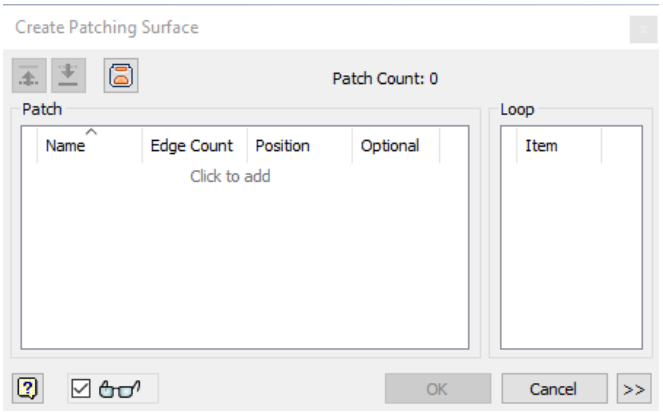

Figure 19-53 *The* ***Create Patching Surface*** *dialog box*

2. Choose the **Auto Detect** button available at the top of the dialog box; a preview of the patching surfaces is displayed in the modeling area, refer to Figure 19-54.

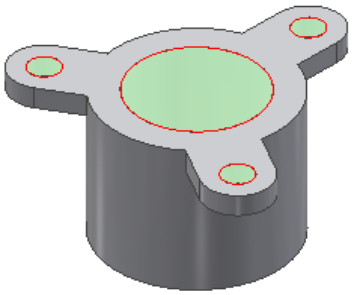

Figure 19-54 *Preview of the patching surfaces*

3. Choose the **OK** button from the dialog box; the patching surfaces are created.

Creating Runoff Surfaces

Now, you need to create a runoff surface. Runoff surface is used to specify the plane at which the core and the cavity meet.

1. Choose the **Create Runoff Surface** tool from the **Parting Design** panel in the **Core/Cavity** contextual tab of the **Ribbon**; the **Create Runoff Surface** dialog box is displayed, as shown in Figure 19-55.

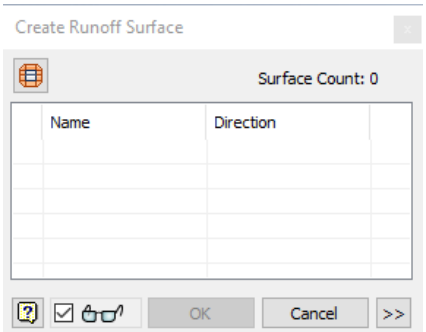

Figure 19-55 *The* ***Create Runoff Surface*** *dialog box*

2. Select the outer loop of the top face of the model; a preview of the runoff surface is displayed, refer to Figure 19-56.

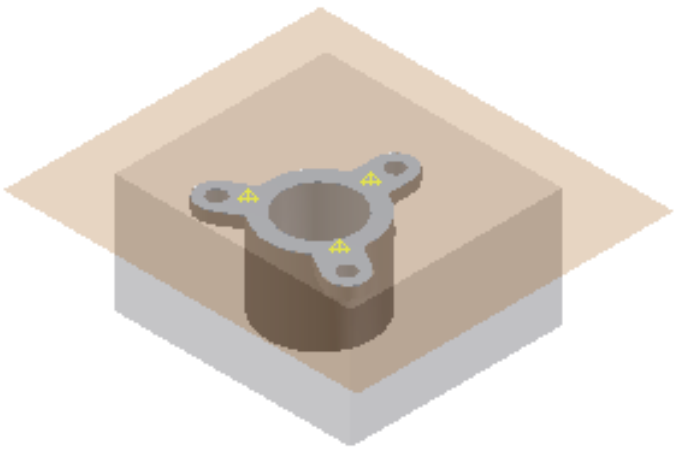

Figure 19-56 *Preview of the runoff surface*

3. Choose the **OK** button from the dialog box; the runoff surface is created.

Generating Core and Cavity

1. Choose the **Generate Core and Cavity** tool from the **Parting Design** panel in the **Core/Cavity** tab of the **Ribbon**; the **Generate Core and Cavity** dialog box is displayed, as shown in Figure 19-57.

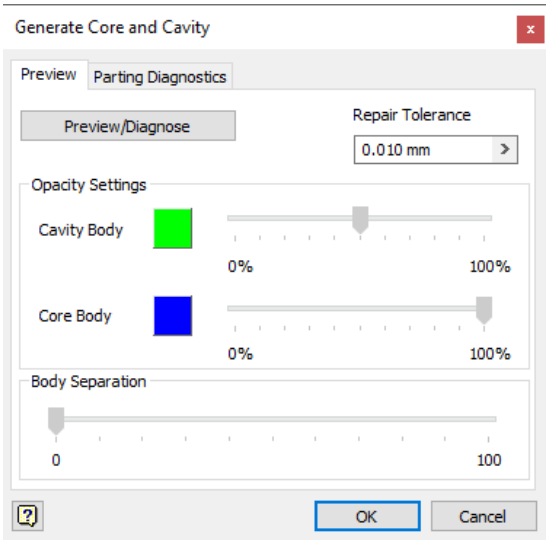

Figure 19-57 *The* ***Generate Core and Cavity*** *dialog box*

2. Choose the **OK** button from the dialog box; the core is generated, as shown in Figure 19-58.

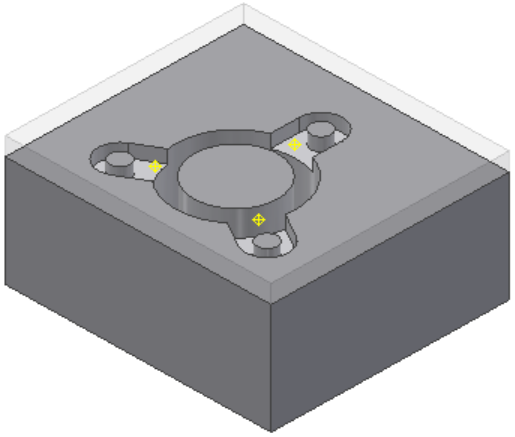

Figure 19-58 *The core and cavity generated*

Now, choose the **Finish Core/Cavity** tool from the **Core/Cavity** contextual tab to finish the process of generating core and cavity.

Creating Plane for the Runner Sketch

Now, you need to create a plane offset from the runoff surface.

1. Choose the **Offset from Plane** tool from the **Plane** drop-down in the **Work Features** panel in the **3D Model** tab of the **Ribbon**; you are prompted to select a plane or face.

2. Select the runoff surface. Next, specify the value of offset as **30** in the edit box displayed in the modeling area; the plane is created.

Creating Sketch for the Runner

Now, you need to create a sketch for the runner system.

1. Choose the **Manual Sketch** tool from the **Auto Runner Sketch** drop-down in the **Runners and Channels** panel in the **Mold Layout** tab of the **Ribbon**; the **Manual Sketch** dialog box is displayed, as shown in Figure 19-59.

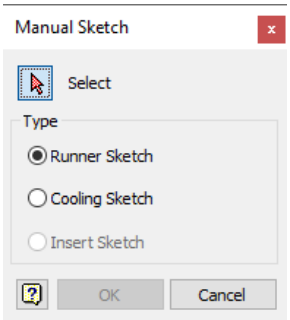

Figure 19-59 *The* ***Manual Sketch*** *dialog box*

2. Select the plane created earlier and choose the **OK** button from the dialog box; the **Sketch** contextual tab is displayed in the **Ribbon** and you are prompted to draw a sketch for the runner.

3. Create the runner sketch, as shown in Figure 19-60, using the Top view orientation.



Note

While creating sketch for the runner, make sure that you connect the end points of the sketch with the gate location points.

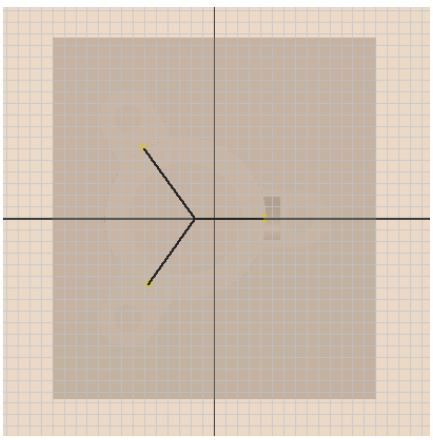

Figure 19-60 *Sketch for the runner*

4. Choose the **Finish Sketch** button from the **Exit** panel in the **Sketch** contextual tab of the **Ribbon**; the **3D Model** tab becomes active in the **Ribbon**.

5. Choose the **Return** tool from the **Return** panel in the **3D Model** tab of the **Ribbon**; the runner sketch is created.

Creating Runner Using the Sketch

Now, you need to create a runner using the sketch.

1. Choose the **Runner** tool from the **Runner** drop-down in the **Runners and Channels** panel in the **Mold Layout** tab of the **Ribbon**; the **Create Runner** dialog box is displayed, as shown in Figure 19-61.

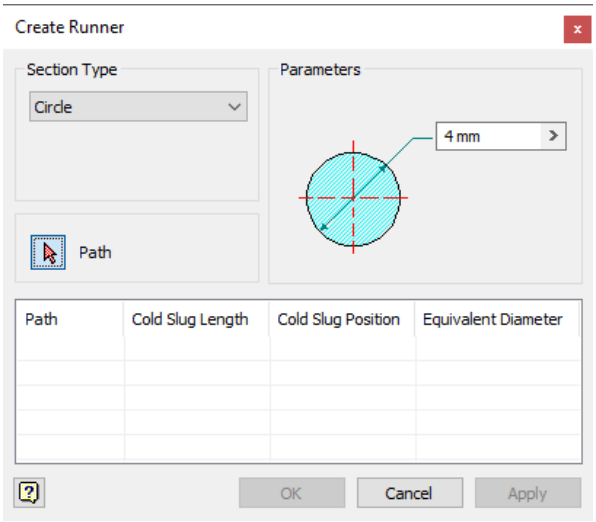

Figure 19-61 *The* ***Create Runner*** *dialog box*

2. Select the runner sketch and then specify the value of diameter of the runner as **10** in the edit box available in the **Parameters** area; the preview of the runner is displayed in the modeling area.

3. Choose the **OK** button from the dialog box; the runner is created according to the sketch.

Adding Gates to the Gate Locations

Now, you need to add gates at the locations specified earlier for gates.

1. Choose the **Gate** tool from the **Runners and Channels** panel of the **Mold Layout** tab in the **Ribbon**; the **Create Gate** dialog box is displayed, as shown in Figure 19-62.

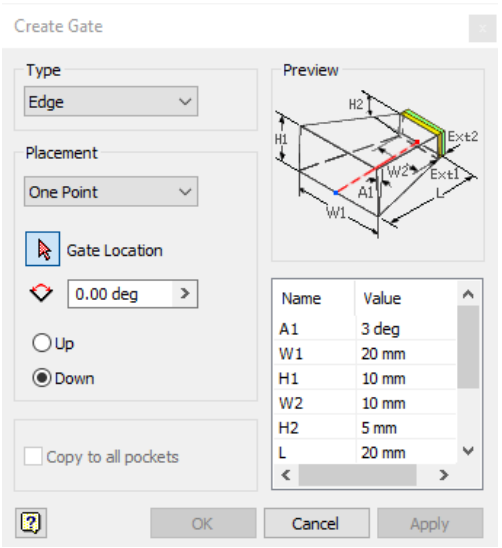

Figure 19-62 *The* ***Create Gate*** *dialog box*

2. Select the **Sprue** option from the **Type** drop-down list in the dialog box and then select a gate location in the modeling area; preview of the gate is displayed at the location.

3. Choose the **Apply** button from the dialog box; the gate is created.

4. Similarly, create the remaining gates and then choose the **Done** button from the dialog box.

Adding Mold Base to the Core and Cavity

Now, you need to add mold base to the core and cavity.

1. Choose the **Mold Base** tool from the **Mold Assembly** panel in the **Mold Assembly** tab of the **Ribbon**; the **Mold Base** dialog box is displayed, as shown in Figure 19-63.

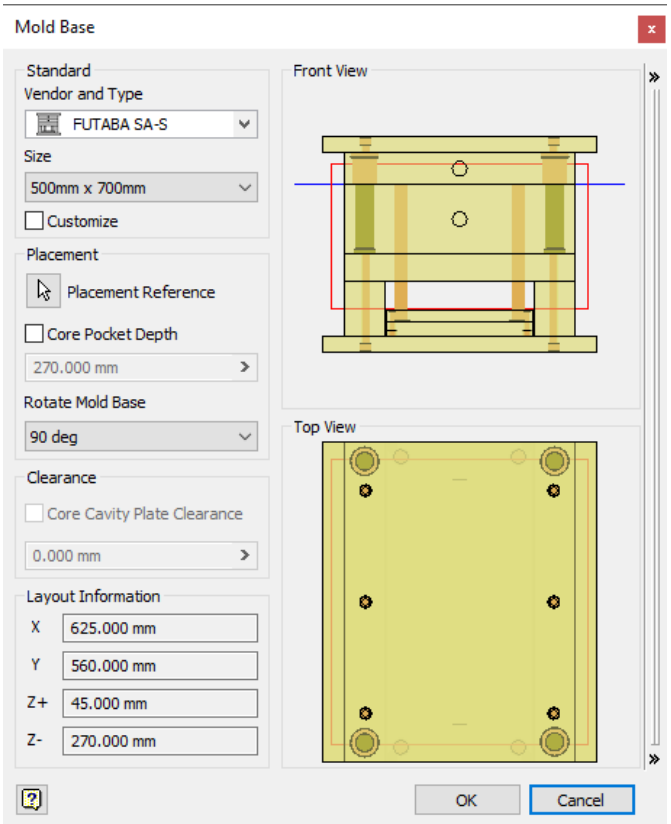

Figure 19-63 *The* ***Mold Base*** *dialog box*

2. Retain the default settings and choose the **Placement Reference** button from the **Placement** area of the dialog box; you are prompted to specify a location for the mold base.

3. Click at the location as, shown in Figure 19-64, and then choose the **OK** button from the dialog box; the mold base is created, refer to Figure 19-65.

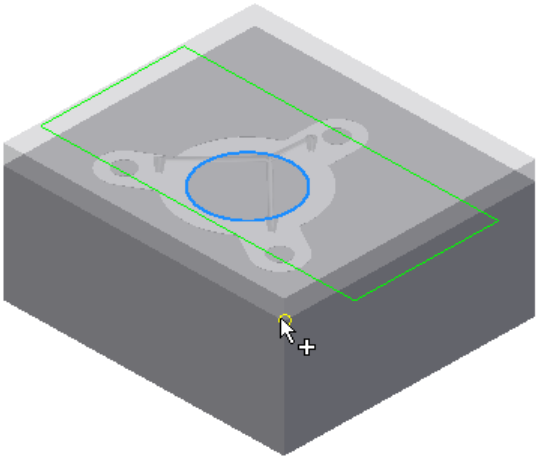

Figure 19-64 *The point to be selected on the workpiece*

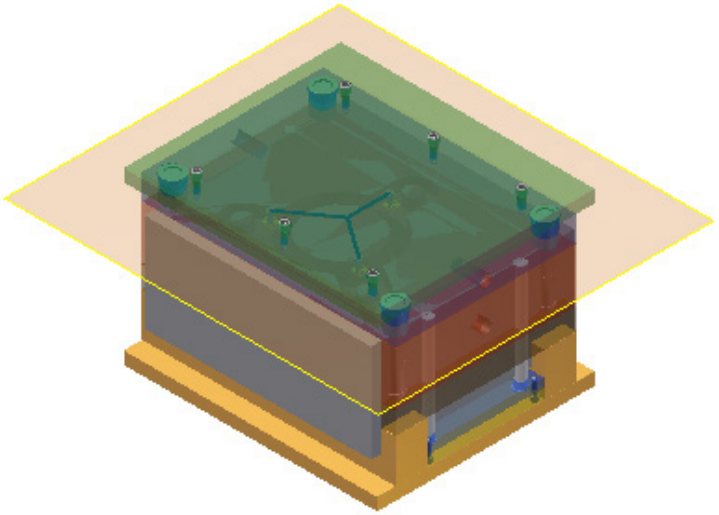

Figure 19-65 *The mold base created*

Creating Sprue in the Mold Base

Now, you need to add a sprue to fill molten material in the runners.

1. Choose the **Sprue Bushing** tool from the **Mold Assembly** panel in the **Mold Assembly** tab of the **Ribbon**; the **Sprue Bushing** dialog box is displayed, as shown in Figure 19-66.

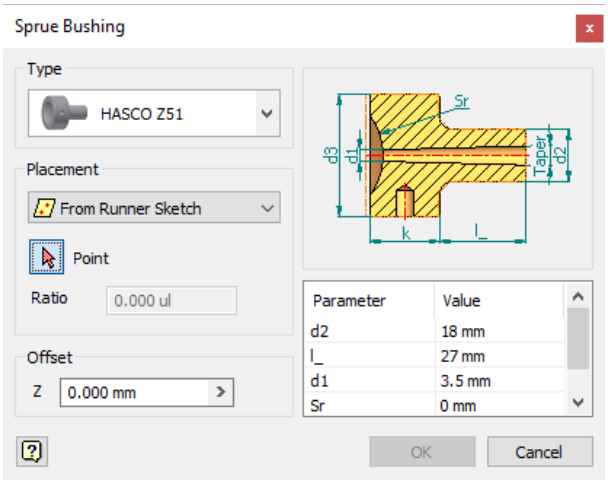

Figure 19-66 *The* ***Sprue Bushing*** *dialog box*

2. Click on the down arrow in the **Type** area; a window is displayed.

3. Select **DME** from the **Vendor** drop-down list. Next, select **AGN** from the list box below the **Vendor** drop-down list.

4. Select the point in the modeling area where the three runners meet, refer to Figure 19-67; preview of the sprue bushing is displayed.

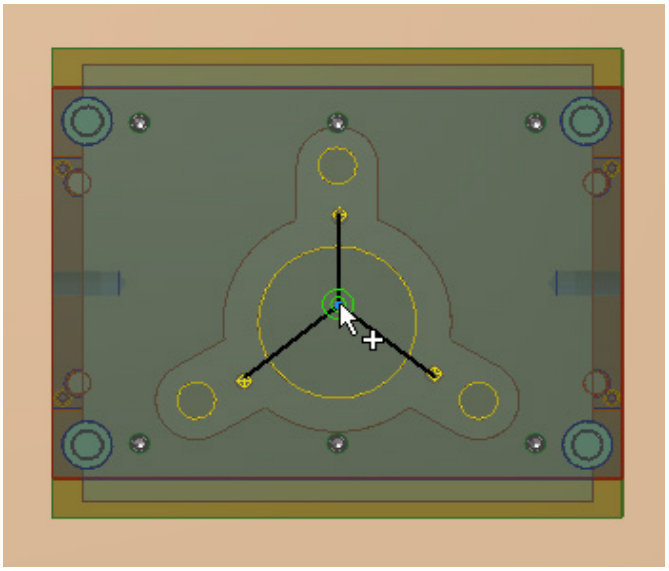

Figure 19-67 *The point to be selected*

5. Select value **76** from the drop-down list displayed for the **L** parameter in the dialog box; preview of the sprue bushing is displayed.

6. Choose the **OK** button from the dialog box; a sprue is created at the selected location.

Creating Locating Ring for the Sprue

Now, you need to create a locating ring to stop the movement of the sprue.

1. Choose the **Locating Ring** tool from the **Mold Assembly** panel in the **Mold Assembly** tab of the **Ribbon**; the **Locating Ring** dialog box is displayed, as shown in Figure 19-68.

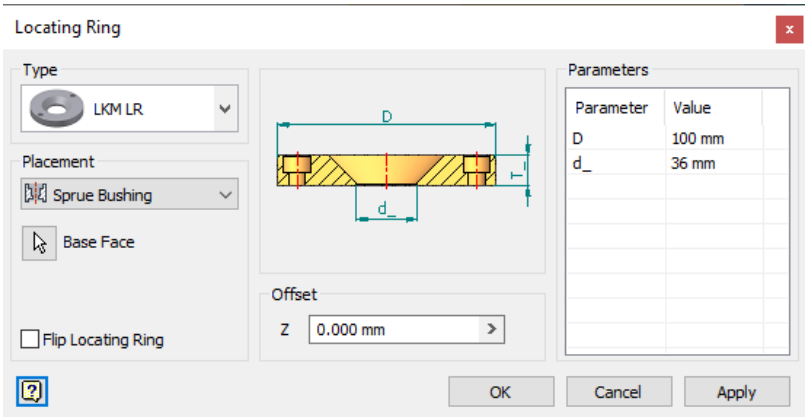

Figure 19-68 *The* ***Locating Ring*** *dialog box*

2. Click on the down arrow in the **Type** area; a window is displayed.

3. Select **RABOURDIN** from the **Vendor** drop-down list available in the window. Next, select **646-Type B** from the list box below the **Vendor** drop-down list.

4. Choose the **OK** button from the dialog box; the locating ring is created, refer to Figure 19-69.

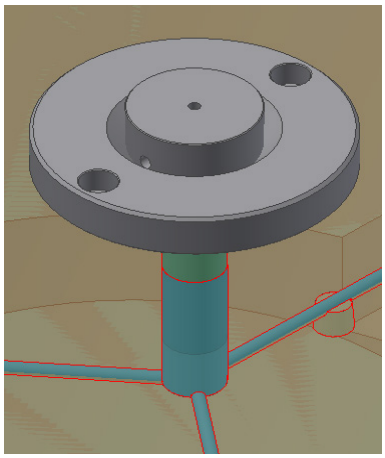

Figure 19-69 *The locating ring created*

Creating Cooling Channel in the Mold

Due to the flow of molten material in the mold, it gets hot. The mold needs to be cooled so that its strength is retained. In this section, you will add a cooling channel to the mold.

1. Choose the **Cooling Channel** tool from the **Runners and Channels** panel in the **Mold Layout** tab of the **Ribbon**; the **Cooling Channel** dialog box is displayed, refer to Figure 19-70 and you are prompted to select a face for specifying the position of the cooling channel.

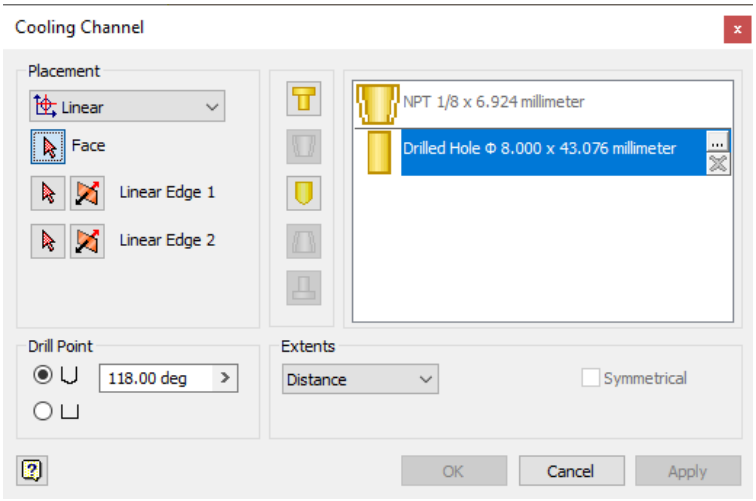

Figure 19-70 *The* ***Cooling Channel*** *dialog box*

2. Select the face shown in Figure 19-71; preview of the cooling channel is displayed.

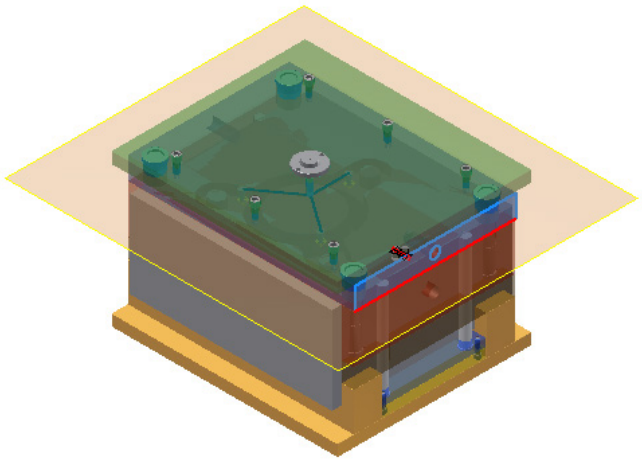

Figure 19-71 *The face to be selected*

3. Select the **Through All** option from the **Extents** drop-down list in the dialog box and then choose the arrow button available for Linear Edge 1 in the dialog box; you are prompted to select an edge.

4. Select the right vertical edge of the plane highlighted in Figure 19-71; the distance value is displayed with dimension line on the model and you are prompted to select a horizontal reference.

5. Select the top horizontal edge of the plane highlighted in Figure 19-71; the distance value is displayed.

6. Click on these dimensions and specify the value **30** for vertical distance and **100** for horizontal distance; a preview of the cooling channel is displayed, as shown in Figure 19-72.

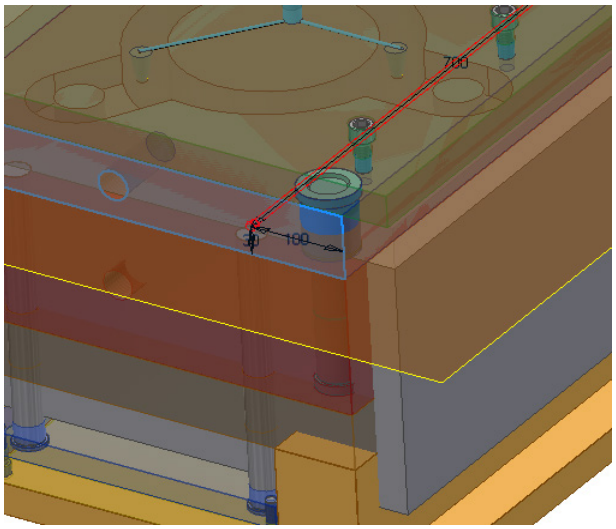

Figure 19-72 *Preview of the cooling channel*

7. Choose the **OK** button from the dialog box; the cooling channel is created.

Adding Cold Wells in the Mold

Now, you will add cold wells to the mold. The cold well is used to trap the solidified plastic left in the runner.

1. Choose the **Cold Well** tool from the **Runners and Channels** panel in the **Mold Layout** tab of the **Ribbon**; the **Cold Well** dialog box is displayed and you are prompted to select a point.

2. Select the midpoint of any of the runner and choose the **Done** button; the cold well is created.

3. Similarly, create more cold wells on each runner, refer to Figure 19-73.

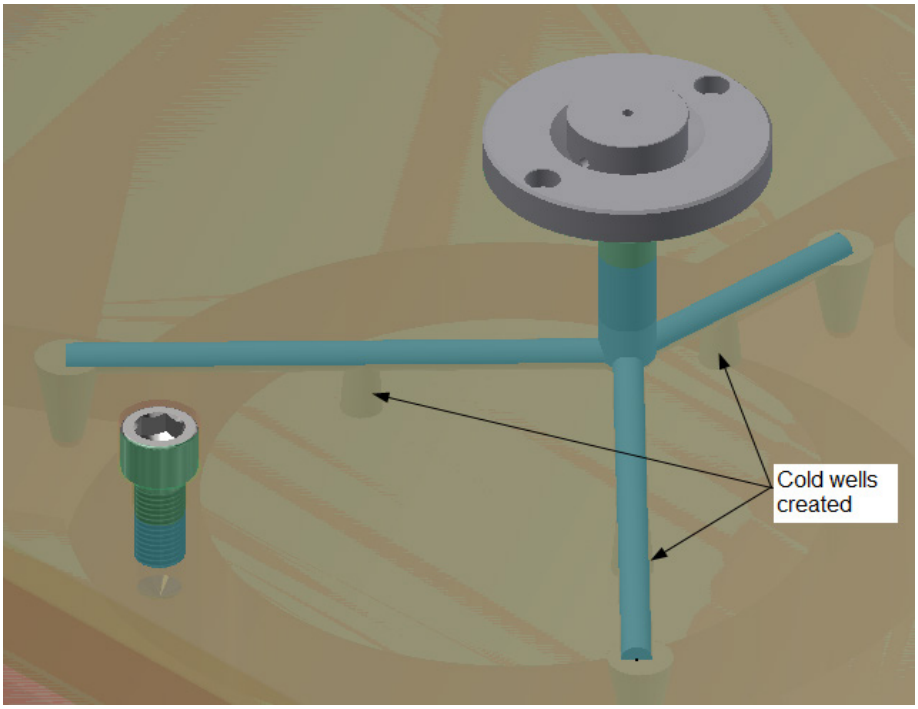

Figure 19-73 *The cold well created*

Self-Evaluation Test

Answer the following questions and then compare them to those given at the end of this chapter:

1. To start designing core and cavity, choose the _____tool from the **Mold Layout** panel.

2. The _____ tool is used to manually create a sketch for the runner.

3. The_____ tool is used to manually create planar patches.

4. You can create a runoff surface without defining the workpiece. (T/F)

5. You can create patching surfaces without defining the workpiece. (T/F)

6. Gate locations are specified only to place gates in the mold. (T/F)

Review Questions

Answer the following questions:

1. You can generate the drawing views by using the 2-D Drawing tool from the 2-D Drawing panel in the _____ tab.

2. The _____ tool is used to add sprue bushing in the mold base.

3. The model imported as plastic part in mold design can be reoriented anytime during designing. (T/F)

4. The **Cooling Channel** tool is available in the **Mold Assembly** tab. (T/F)

5. The **Manual Sketch** tool can be used to create sketch for the cooling channel. (T/F)

EXERCISES

Exercise 1

Create a mold system for the component shown in Figure 19-74. The part file for this component has been created in Tutorial 3 of Chapter 6. **(Expected time: 1 hr)**

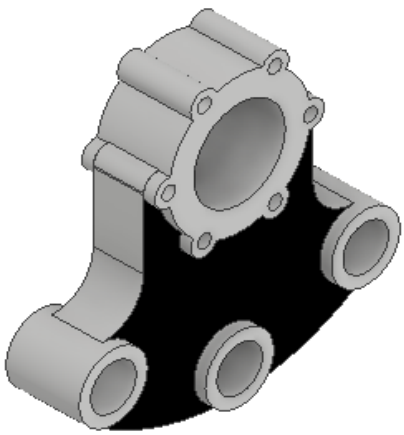

Figure 19-74 *The component for the mold system creation*

Answers to Self-Evaluation Test

1. Core/Cavity, **2. Manual Sketch**, **3. Create Planar Patch**, **4.** F, **5.** T, **6.** T