Chapter 2

Understanding External References

Learning Objectives

After completing this chapter, you will be able to:

- *Understand external references and their applications*
- *Understand dependent symbols*
- *Use the External References Palette*
- *Use the Attach, Unload, Reload, Detach, and Bind options*
- *Edit the path of an xref*
- *Understand the difference between the Overlay and Attachment options*
- *Use the Attach tool*
- *Work with Underlays*
- *Use the DesignCenter to attach a drawing as an xref*
- *Use the Bind tool to add dependent symbols*
- *Use the Clip tool to clip xref drawings*
- *Use the Edit Reference tool for in-place editing*

Key Terms

- *XRef*
- *Attach*
- *Reload*
- *Detach*
- *Unload*
- *Bind*
- *Overlay*
- *Underlay*
- *Frame*
- *Clip*

EXTERNAL REFERENCES

The external reference feature allows you to reference an external drawing without making that drawing a permanent part of the existing drawing. For example, assume that you have an assembly drawing ASSEM1 that consists of two parts, SHAFT and BEARING. The SHAFT and BEARING are separate drawings created by two CAD operators or provided by two different vendors. You want to create an assembly drawing from these two parts. One way to create an assembly drawing is to insert these two drawings as blocks by using the **Insert** tool in the **Block** panel. Now assume that the design of BEARING has changed due to customer or product requirements. To update the assembly drawing, you have to make sure that you insert the BEARING drawing after the changes have been made. If you forget to update the assembly drawing, then the assembly drawing will not reflect the changes made in the piece part drawing. In a production environment, this could have serious consequences.

You can solve this problem by using the external reference facility, which lets you link the piece part drawings with the assembly drawing. If the xref drawings (piece part) get updated, the changes are automatically reflected in the assembly drawing. This way the assembly drawing stays updated, no matter when the changes were made in the piece part drawings. There is no limit to the number of drawings that you can reference. You can also have nested references. For example, the piece part drawing BEARING could be referenced in the SHAFT drawing, and the SHAFT drawing could be referenced in the assembly drawing ASSEM1. When you open or plot the assembly drawing, AutoCAD automatically loads the referenced drawing SHAFT and the nested drawing BEARING. While using external references, several people working on the same project can reference the same drawing and all the changes made are displayed everywhere the particular drawing is being used.

If you use the **Insert** tool to insert the piece parts, the piece parts become a permanent part of the drawing, and therefore, the drawing file size increases. However, if you use the external reference feature to link the drawings, the piece part drawings are not saved with the assembly drawing. AutoCAD only saves the reference information with the assembly drawing; therefore, the size of the drawing is minimized. Like blocks, the xref drawings can be scaled, rotated, or positioned at any desired location, but they cannot be exploded. You can also use only a part of the xref by making clipped boundary of xrefs.



Tip

External referenced drawings are useful for creating parts or subassemblies and then putting them together in one drawing to create the main assembly. You can also use it for laying out the contents of a drawing with multiple views before plotting.

DEPENDENT SYMBOLS

When you use the **Insert** tool to insert a drawing, the information about the named objects is lost, if names are duplicated. However, if they are unique, they are imported. The named objects are entries such as blocks, text styles and layers. For example, if the assembly drawing has a layer Hidden of green color and HIDDEN linetype and the piece part Bearing has also a layer Hidden of blue color and HIDDEN2 linetype, the values set in the assembly drawing will override the values of the inserted drawing when the Bearing drawing is inserted in the assembly drawing, refer to Figure 2-1. As a result, in the assembly drawing, the layer Hidden will retain green color and HIDDEN linetype, ignoring the layer settings of the inserted drawing. Only

Evaluation Copy. Do not reproduce. For information visit www.cadcim.com

those layers that have the same names are affected. The remaining layers that have different layer names are added to the current drawing.

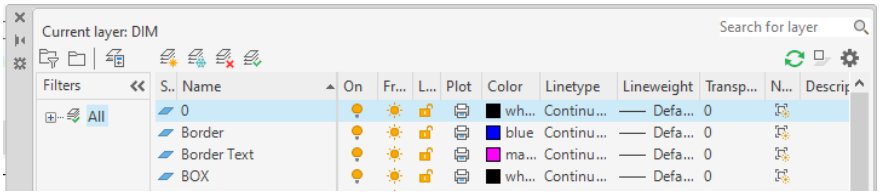

Figure 2-1 *Partial view of the layer settings of the current drawing in the* ***LAYER PROPERTIES MANAGER***

In the xref drawings, the information about the named objects is not lost because AutoCAD will create additional named objects such as specified layer settings, as shown in Figure 2-2. For xref drawings, these named objects become dependent symbols (features such as layers, linetypes, object color, text style, and so on).

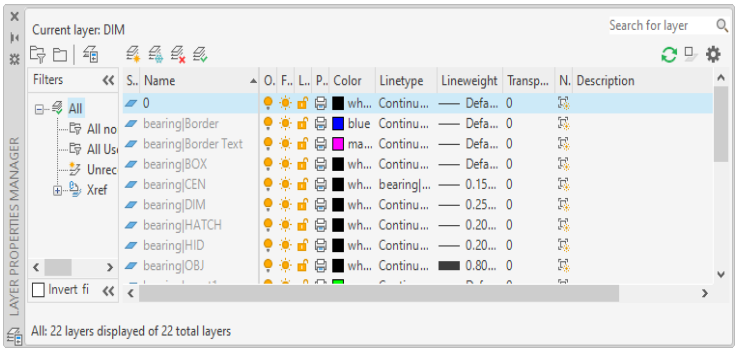

Figure 2-2 *Additional layers created by xref*

The layer Hidden of the xref drawing (Bearing) is appended with the name of the xref drawing Bearing, and the two are separated by the vertical bar symbol (|). The names of these layers appear in light gray color in the **LAYER PROPERTIES MANAGER** or **Layer** drop-down list of the **Layers** panel in the **Home** tab. These layers can neither be selected nor be made current. The layer name Object changes to Bearing|Object. Similarly, Center is renamed as Bearing|Center, refer to Figure 2-2. The information added to the current drawing is not permanent. It is added only when the xref drawing is loaded. If you detach the xref drawing, the dependent symbols are automatically erased from the current drawing.

When you xref a drawing, AutoCAD does not let you reference the symbols directly. For example, you cannot make the dependent layer, Bearing|Object, as current layer. Therefore, you cannot add any objects to that layer. However, you can change the color, linetype, lineweight, plotstyle, or visibility (on/off, freeze/thaw) of the layer in the current drawing.

Evaluation Copy. Do not reproduce. For information visit www.cadcim.com



Note

*You cannot make the xref-dependent layers current in a drawing. When the xref drawing is bound to the current drawing by using the **XBIND** command, only then you can make the xref-dependent layers a permanent part of the current drawing and use them. The **XBIND** command will be discussed later in this chapter.*

MANAGING EXTERNAL REFERENCES IN A DRAWING

Ribbon: View > Palettes > External References Palette
Toolbar: Reference > External References **Command:** XREF
Menu Bar: Insert > External References



When you choose the **External References Palette** button from the **Palettes** panel of the **View** tab, refer to Figure 2-3, AutoCAD displays the **EXTERNAL REFERENCES** palette, as shown in Figure 2-4. The **EXTERNAL REFERENCES** palette displays the status of each Xref in the current drawing and the relation between various Xrefs. It allows you to attach a new xref and detach, unload, and load an existing one, change an attachment to an overlay, or an overlay to an attachment. You can also open a reference drawing for editing from this palette. Additionally, it allows you to edit an xref's path and bind the xref definition to the drawing.

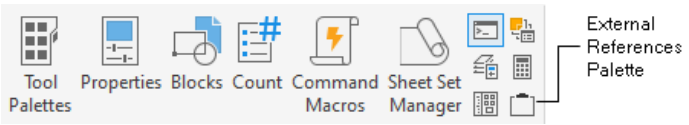

***Figure 2-3** The **Palettes** panel*

Apart from the methods mentioned in the command box, you can also invoke the **EXTERNAL REFERENCES** palette by selecting an xref in the current drawing and then right-clicking in the drawing area to display a shortcut menu. Next, choose **External References** from the shortcut menu; the **EXTERNAL REFERENCES** palette will be displayed.

The upper right corner of the palette has two buttons: **List View** and **Tree View**.

List View

When you choose the **List View** button, the xrefs present in the drawing are displayed in alphabetical order. This is the default view. The list view displays information about xrefs in the current drawing under the following headings:

Reference Name

This column lists the name of all existing references in the current drawing.

Evaluation Copy. Do not reproduce. For information visit www.cadcim.com

Status

This column lists the current status of each xref in the drawing. It lists whether an xref is loaded, unloaded, unreferenced, not found, orphaned, unresolved, or marked to be reloaded. A loaded xref implies that the xref is attached to the current drawing. You can then unload it and then reload it using the options in the dialog box (this will be discussed later). An xref selected to be unloaded or reloaded displays **Unload** and **Needs reloading** respectively, under the **Status** column. If the xref has nested references that cannot be found, the status is **Unreferenced**, and if the parent of the nested reference gets unloaded, or cannot be found, its status is described as **Orphaned**. An unreferenced xref will not be displayed. If the xref is not found in the search paths defined, its status is **Not Found**. A missing xref or one that cannot be found is **Unresolved**.

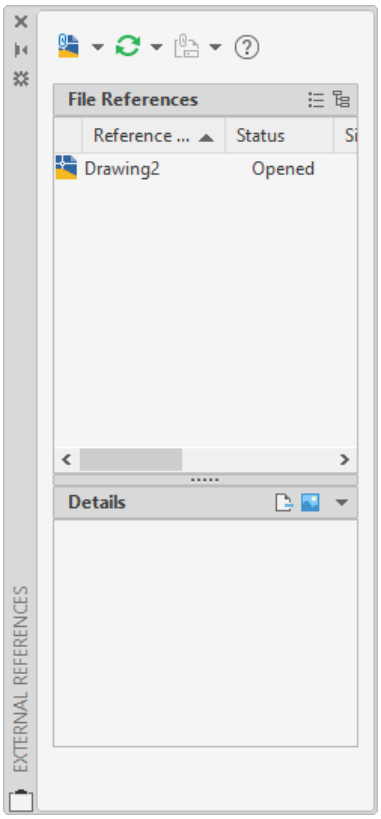

***Figure 2-4** The **EXTERNAL REFERENCES** palette*

Size

The file size of each xref is listed here.

Type

This column lists whether the xref is an attachment or overlay.

Date

This column lists the date on which the xref drawing was last saved.

Saved Path

This column lists the path of the xref, that is, the route taken to locate the particular referenced drawing.

Choose any of these headings; AutoCAD sorts and lists the Xrefs in the current drawing according to that particular title. For example, on choosing **Reference Name**, the xrefs are sorted and listed as per the name. The column widths can be increased or decreased as per your requirements. When you place your cursor at the edge of a column title button, the cursor changes to a horizontal resizing cursor. Now, press the pick button of your mouse and drag the column edge to increase or decrease its width. After you increase the column widths, it is possible that the widths of the columns extend beyond the widths of list boxes. In such a case, a horizontal scroll bar appears at the bottom of the list box. You can use the scroll bar to view the columns that extend beyond the width of the list box.

Tree View

On choosing the **Tree View** button available in the right side of the **File References** title bar, the xrefs are displayed in a hierarchical tree view in the **EXTERNAL REFERENCES** palette. It displays information on nested xrefs and their relationship with one another. Xrefs are indicated by an icon of a paper with a paper clip. This icon appears with a cross mark when the xref gets unloaded, and if there is a missing xref, the "**!**" sign appears. Similarly, the arrow pointing

Evaluation Copy. Do not reproduce. For information visit www.cadcim.com

downward indicates that the xref is unloaded. You can also choose **List View** and **Tree View** by pressing the F3 and F4 keys, respectively.

Attaching an Xref Drawing (Attach Option)

The **Attach** drop-down list is available at the upper left corner of the **EXTERNAL REFERENCES** palette. If you choose the down arrow on this button, a flyout will be displayed. Choose the **Attach DWG** option from the **Attach** drop-down list to attach an xref drawing to the current drawing. This option can also be invoked by right-clicking on the **File References** area. The following examples illustrate the process of attaching an xref to the current drawing. In this example, it is assumed that there are two drawings, SHAFT and BEARING. SHAFT is the current drawing that is loaded on the screen, as shown in Figure 2-5 and the BEARING drawing is saved on the disk. If you want to xref the BEARING drawing in the SHAFT drawing, you need to follow the steps given below:

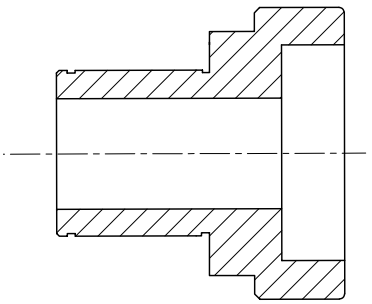

Figure 2-5 *Drawing of SHAFT*

1. The first step is to make sure that the SHAFT drawing is on the screen (draw the shaft drawing with assumed dimensions).



Tip

No drawing needs to be on the screen. You could attach both drawings, BEARING and SHAFT to an existing drawing, even if it is a blank drawing.

2. Choose the **External References Palette** button from the **Palettes** panel to display the **EXTERNAL REFERENCES** palette. In this palette, choose the **Attach DWG** option; the **Select Reference File** dialog box will be displayed.

   Select the drawing that you want to attach (BEARING) and then choose the **Open** button; the **Attach External Reference** dialog box will be displayed, as shown in Figure 2-6. In this dialog box, the name of the file that you have selected to be attached to the current drawing as an xref is displayed in the **Name** drop-down list. You can also specify the name of the file to be attached from the **Name** drop-down list.



Note

*AutoCAD also searches for the xref file in the paths defined in the **Project Files Search Path** folder in the **Files** tab of the **Options** dialog box. This folder does not have any path defined in it and displays **Empty** when the tree view is expanded. To define a search path, select **Empty** and choose the **Add** button in the dialog box. You can enter a project name here, if you want. Now, expand the tree view, select **Empty** again, and choose the **Browse** button; the **Browse for Folder** window is displayed. Select the folder that is to be searched for the file and choose the **OK** button. Then, choose the **Apply** button and the **OK** button from the **Options** dialog box to exit it.*

Evaluation Copy. Do not reproduce. For information visit www.cadcim.com

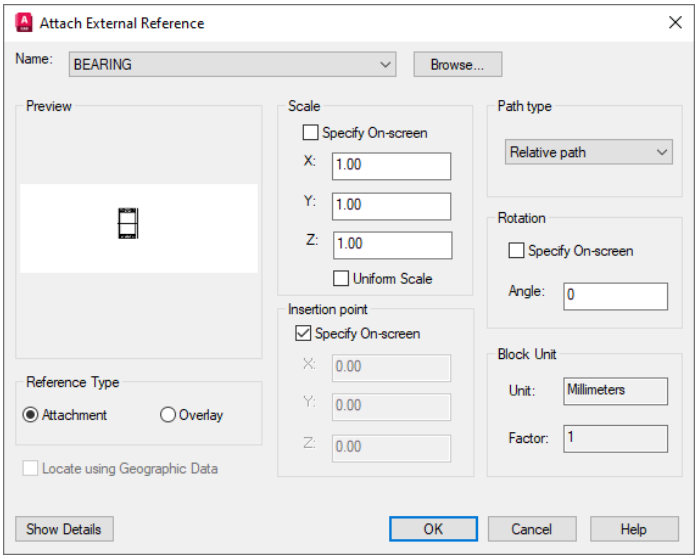

Figure 2-6 *The* ***Attach External Reference*** *dialog box*

In the **Reference Type** area, select the **Attachment** radio button, if it is not selected by default. The **Overlay** option is discussed later in this chapter. The **Path type** drop-down list is used to specify whether you want to attach a drawing with full path, relative path, or no path. If you select the **Full path** option, the precise location of the xreffed drawing is saved. If you select the **Relative path** option (if not selected by default), the position of the xreffed drawing with reference to the host drawing is saved. If you select the **No path** option, AutoCAD will search for the xreffed drawing in only that folder in which the host drawing is saved. You can also specify the insertion point, scale factors, and rotation angle in the respective **X**, **Y**, **Z**, and **Angle** edit boxes or select the **Specify On-screen** check boxes to use the pointing device to specify them on the screen. By default, the scale factors in **X**, **Y**, and **Z** edit boxes is 1 and the rotation angle is 0. The **Block Unit** area provides information regarding the units of the inserted block. The **Unit** edit box displays the unit of the block. The **Factor** edit box displays the scale factor, depending on the unit of the block and that of the current drawing. If you choose the **Show Details** button, the path of the file is displayed adjacent to **Found in**. Also, the saved path of the file is displayed adjacent to **Saved path**. Choose the **OK** button from the **Attach External Reference** dialog box to accept the default values and exit the dialog box. Specify the insertion point; the drawing is attached to the current drawing, but it appears faded. After attaching the BEARING drawing as an xref, save the current drawing with the file name SHAFT, as shown in Figure 2-7. You can control the fading intensity of the attached objects by using the options from the **Fade control** area of the **Display** tab in the **Options** dialog box. In this area, you can either use the slider bar

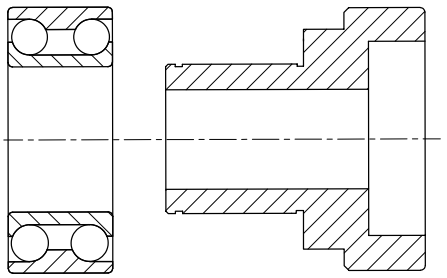

Figure 2-7 *Attaching the BEARING drawing as an xref*

Evaluation Copy. Do not reproduce. For information visit www.cadcim.com

to increase or decrease the fading intensity or you can enter a value in the edit box. You can also use the **XDWGFADECTL** variable to control the fading intensity of other objects while editing them. By default, the fading intensity value is set to 50.

Note

*In AutoCAD, you can also control the Path type by using **REFPATHTYPE** system variable. This system variable has three values which are given next:*

0=No path
1=Relative path (default value)
2=Full path

*You can also change the Path type of an existing xreffed drawing by first invoking a shortcut menu by right-clicking on the name of xreffed drawing from **EXTERNAL REFERENCES** palette and then choosing the desired path type from the **Change Path Type** cascading menu.*

3. Open the BEARING drawing and make the changes shown in Figure 2-8 (draw polylines on the sides). Now, save the drawing with the file name BEARING.

4. Open the SHAFT drawing. In the **EXTERNAL REFERENCES** palette, you will notice that the message Needs reloading displayed in the **Status** column of the BEARING drawing. Right-click on BEARING and choose **Reload**; the BEARING drawing is automatically updated, refer to Figure 2-9. This is the most useful feature of external reference. You can insert the drawing as a block also, but in that case any modification made in the drawing will not reflect automatically in the drawing in which it is inserted.

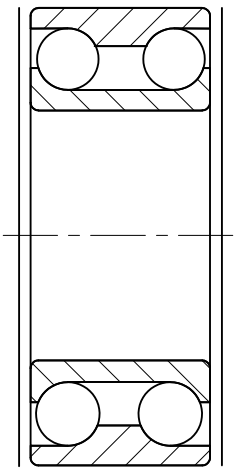

Figure 2-8 *The modified xref BEARING drawing*

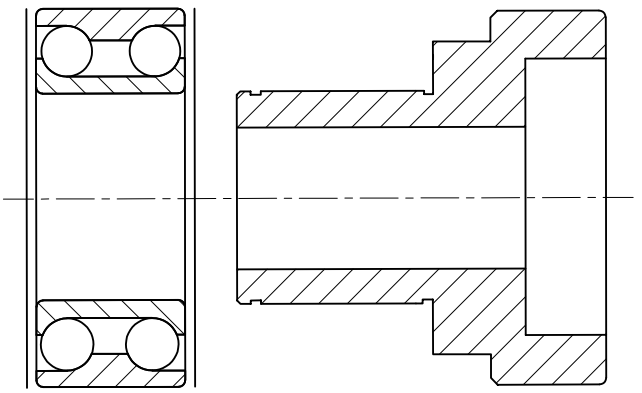

Figure 2-9 *BEARING drawing automatically updated after loading the SHAFT drawing*

Evaluation Copy. Do not reproduce. For information visit www.cadcim.com

However, when you make modifications in a large drawing file, it is not easy to find out where the modifications were made. AutoCAD 2025 comes with **Xref Compare** bar that helps you detect the changes made in the xref drawings. Whenever you modify a drawing and click on the **Modify** option, the **Xref Compare** bar with modified drawing will be displayed, as shown in Figure 2-10.

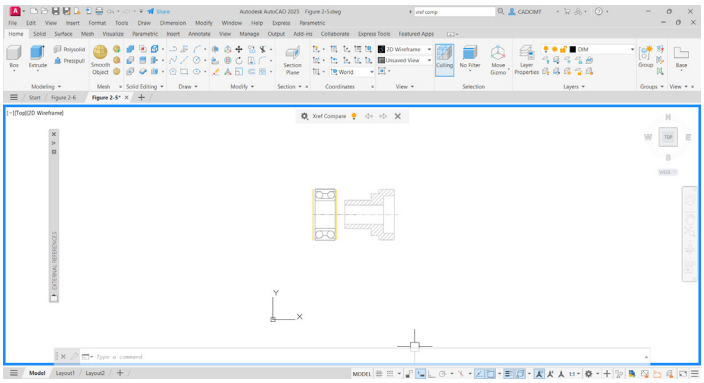

Figure 2-10 *The* ***Xref Compare*** *bar with modified drawing*

You will notice that the by default, the identical part between the two drawings is displayed in gray color. The elements which have been modified are displayed in green color.

In the **Xref Compare** bar, a number of parameters can be set to change the appearance of the modified elements using the tools in the **Settings** button. For example, if you want to change the color of the modified elements into blue, choose green color from color swatch in the **Difference** area; the **Select Color** dialog box will be displayed. In this dialog box, select blue color and choose the **OK** button; the color of the modified element will change into blue. You can also turn **On/Off** the visibility of the respective elements using the **Visibility toggle** button available on the left of the color swatch in the **Difference** area.

Now once you attach an xref drawing, AutoCAD remembers the name of the attached drawing If you xref the drawing again, AutoCAD displays a message as given next.
Xref "BEARING" has already been defined.
Using existing definition.
Specify insertion point or [Scale/X/Y/Z/Rotate/PScale/PX/PY/PZ/PRotate]: *Specify the location to place another copy of the xref.*



Note

If the external reference drawing that you want to attach is currently being edited, AutoCAD will attach the drawing that was last saved through the ***Save***, ***Write Block***, *or* ***Exit Autodesk AutoCAD 2025*** *buttons.*

Points to Remember about Xref

1. When you enter the name of the xref drawing, AutoCAD checks for block names and xref names. If a block exists with the same name as the name of the xref drawing in the current drawing, the **Attach** tool is terminated and an error message is displayed.

2. When you xref a drawing, the objects that are in the model space are attached. Any objects that are in the paper space are not attached to the current drawing.

Evaluation Copy. Do not reproduce. For information visit www.cadcim.com

3. The layer 0, DEFPOINTS, and the linetype CONTINUOUS are treated differently. The current drawing layers 0, DEFPOINTS, and linetype CONTINUOUS will override the layers and linetypes of the xref drawing. For example, if the layer 0 of the current drawing is white and the layer 0 of the xref drawing is red, the white color will override the red.

4. The xref drawings can be nested. For example, if the BEARING drawing contains the reference INRACE and you xref the BEARING drawing to the current drawing, the INRACE drawing is automatically attached to the current drawing. If you detach the BEARING drawing, the INRACE drawing gets detached automatically.

5. You can rename an xref under the **File References** column name in the list box of the **EXTERNAL REFERENCES** palette by double-clicking on the xref. You can now enter a new name. An AutoCAD warning is displayed: **Caution! "XXXX" is an externally referenced block. Renaming it will also rename its dependent symbols**.

6. When you xref a drawing, AutoCAD stores the name and path of the drawing by default. If the name of the xref drawing or the path where the drawing was originally stored has changed or you cannot find it in the path specified in the **Options** dialog box, AutoCAD cannot load the drawing, plot it, or use the **Reload** option of the **EXTERNAL REFERENCES** palette.

Detaching an Xref Drawing (Detach Option)

The **Detach** option can be used to detach or remove the xref drawings. If there are any nested xref drawings defined with the xref drawings, they are also detached. Once a drawing is detached, it is erased from the screen. To detach an xref drawing, select the file name in the **EXTERNAL REFERENCES** palette list box to highlight it and then right-click on it, a flyout will be displayed. Next, choose the **Detach** option from the flyout, the xref is completely removed from the current drawing.

Updating an Xref Drawing (Reload Option)

When you load a drawing, AutoCAD automatically loads the referenced drawings. The **Reload** option of the **EXTERNAL REFERENCES** palette lets you update the xref drawings and nested xref drawings at any time. You do not need to exit the drawing editor and then reload the drawing. To reload the xref drawings, invoke the **EXTERNAL REFERENCES** palette, select the xreffed drawing in the list box, and then right-click on it to choose the **Reload** option from the shortcut menu. AutoCAD will scan for the referenced drawings and the nested xref drawings and load the most recently saved version of the drawing.

You can reload all the attached xref drawings at one time by selecting **Reload All References** from the drop-down list of the **Refresh** button on the upper left corner of the **EXTERNAL REFERENCES** palette.

The **Reload** option is generally used when the xref drawings are currently being edited and you want to load the updated drawings. The xref drawings are updated based on what is saved on the disk. Therefore, before reloading an xref drawing, you should make sure that the xref drawings that are being edited have been saved. If AutoCAD encounters an error while loading the referenced drawings, the **External References** tool is terminated, and the entire reload operation is canceled.

Evaluation Copy. Do not reproduce. For information visit www.cadcim.com

Unloading an Xref Drawing (Unload Option)

The **Unload** option allows you to temporarily remove the definition of an xref drawing from the current drawing. However, AutoCAD retains the pointer to the xref drawings. When you unload the xref drawings, the drawings are not displayed on the screen. You can reload the xref drawings by using the **Reload** option.



Tip

It is recommended that you unload the referenced drawings if they are not being used. After unloading the xref drawings, the drawings load much faster and need lesser memory.

Adding an Xref Drawing (Bind Option)

The **Bind** option lets you convert the xref drawings to blocks in the current drawing. The bound drawings, including the nested xref drawings (that are no longer xrefs), become a permanent part of the current drawing. The bound drawing cannot be detached or reloaded. You can use this option when you want to send a copy of your drawing to a customer for review. Because the xref drawings are a part of the existing drawing, you do not need to include the xref drawings or the path information. You can also use this option to safeguard the master drawing from accidental editing of the piece parts. To bind the xref drawings, select the file names in the **EXTERNAL REFERENCES** palette and then right-click and choose the **Bind** option from the shortcut menu; the **Bind Xrefs/DGN underlays** dialog box is displayed, as shown in Figure 2-11. AutoCAD provides two methods to bind the xref drawing in the **Bind Type** area of the dialog box. These methods are discussed next.

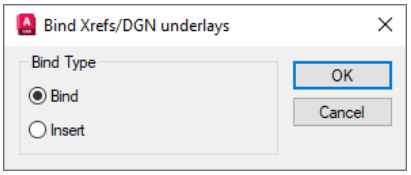

Figure 2-11 *The* ***Bind Xrefs/DGN underlays*** *dialog box*

Bind

When you use the **Bind** radio button, AutoCAD binds the selected xref definition to the current drawing. All the xrefs are converted to blocks and the named objects are renamed. For example, if you xref the drawing Bearing with a layer named Object, a new layer Bearing|Object is created in the current drawing. When you bind this drawing, the xref dependent layer Bearing|Object will become a locally defined layer Bearing0 Object, refer to Figure 2-12. If the Bearing0 Object layer already exits, AutoCAD will automatically increment the number, and the layer name becomes Bearing1Object.

S..	Name	O.	F..	L..	P..	Color	Linetype	Lineweight	Transp...	New VP Freeze	Description
	0					white	Continuous	Defa...	0		
	Bearing C...					10	Continuous	Defa...	0		
✓	Bearing Hi...					blue	Continuous	Defa...	0		
	Bearing O...					50	Continuous	Defa...	0		
	Center					140	Continuous	Defa...	0		
	Defpoints					white	Continuous	Defa...	0		
	Hidden					80	Continuous	Defa...	0		
	Objects					yellow	Continuous	Defa...	0		

Figure 2-12 *Partial view of the LAYER PROPERTIES MANAGER*

Evaluation Copy. Do not reproduce. For information visit www.cadcim.com

Insert

When you use the **Insert** radio button, AutoCAD inserts the xref drawing. The xrefs get converted into blocks. For example, if you xref the drawing Shaft with a layer named Object, a new layer Shaft|Object is created in the current drawing. If you use the **Insert** option to bind the xref drawing, the layer name Shaft|Object is renamed as Object. If the object layer already exists, then the values set in the current drawing override the values of the inserted drawing.

Editing an XREF's Path

By default, AutoCAD saves the path of the referenced drawing and displays it in the **Saved Path** column of the **EXTERNAL REFERENCES** palette. As mentioned earlier, when AutoCAD loads the drawing containing a referenced file, and if it is not able to find the file at the location specified in the **Saved Path** column of the **EXTERNAL REFERENCES** palette, it searches for the file in the current directory, and in the **Support File Search Path** locations specified in the **Files** tab of the **Options** dialog box. If a file with the same name is found, it is loaded. Now, when you invoke the **EXTERNAL REFERENCES** palette, you will notice that if you select an xref name in the list box to highlight it, the path displayed in the **Found At** column for the xref file is different from the one displayed in the **Saved Path** edit box. To update the path of the xref file, choose the Browse button. The new path is saved and displayed in the **Found At** column.

If AutoCAD is unable to locate the specified file even in the directories specified in the **Files** tab of the **Options** dialog box, it will display an error message saying that it cannot find the specified file. The path of the file is displayed as a marker text in the current drawing. Now, when you invoke the **EXTERNAL REFERENCES** palette, the status of the drawing is shown as **Not Found**. To specify a new path for the xref file, click in the **Saved Path** field; the path will be highlighted and the Browse button will be displayed next to the path. Click on this button; the **Select new path** dialog box will be displayed. Using this dialog box, you can locate the drawing to be used as xref. Once you have found the file, choose the **Open** button to return to the **EXTERNAL REFERENCES** palette. The new path is displayed in the **Found At** column and the **Saved Path** edit box. The specified xref file is reloaded and replaces the marker text in the drawing, when you choose the **OK** button in the **EXTERNAL REFERENCES** palette. If you remember the new location of the xref file, you can also enter it in the **Saved Path** edit box. For example, if a drawing, which was originally in the C:\CAD\Proj1 subdirectory, has been moved to C:\Parts directory, the path must be edited so that AutoCAD is able to load the xref drawing.

In AutoCAD, you can assign new path to the xreffed file whose path is missing by choosing the **Select New Path** option from the shortcut menu invoked by right clicking on the name of xreffed drawing from **EXTERNAL REFERENCES** palette. You can also assign the same path to every file whose path is missing using this tool.

You can change the path of various xreffed drawings having same path by choosing the **Find and Replace** option from the shortcut menu invoked by right-clicking on the name of xreffed drawing from **EXTERNAL REFERENCES** palette and assign new path to all the drawings at once.

THE OVERLAY OPTION

As discussed earlier, when you attach an xref to a drawing, the **Attach External Reference** dialog box is displayed. The **Reference Type** area of this dialog box has two radio buttons, **Attachment**

Evaluation Copy. Do not reproduce. For information visit www.cadcim.com

and **Overlay**. You can select any of these radio buttons to xref a drawing. The **Attachment** radio button is selected by default. The advantage of selecting the **Overlay** radio button is that you can access the desired drawing instead of the drawing along with its xreffed attachments. For example, consider three people working on three different drawings that are a part of the same project. The first designer is working on the layout of walls of a room, the second designer is working on the furniture layout of the room, and the third on the electrical layout of that room. The names of the drawings are WALLS, FURNITURE, and ELECTRICAL, respectively. Assume that the designer working on the walls layout selects the **Attachment** radio button to xref the FURNITURE drawing so that he or she can check the furniture layout according to the wall structure. After insertion, the WALLS drawing will comprise the wall structure (current drawing) along with the furniture layout (xreffed drawing). Now, if the designer working on the electrical layout xrefs the WALLS drawing to check the location of electrical fittings with respect to the walls, he/she will get the drawing that has the furniture layout as well as the wall layout. This is because the FURNITURE drawing was xreffed in the WALLS drawing by selecting the **Attachment** radio button.

In this example, the designer working on the ELECTRICAL drawing may not require the FURNITURE drawing. This is because at this stage, the designer will be more interested in checking the electrical fittings with respect to the wall structure. So the furniture layout that is xreffed with the wall structure needs to be avoided. This can be done by selecting the **Overlay** radio button while X-referencing the FURNITURE drawing in the WALLS drawing. This means that the designer working on the wall structure needs to xref the furniture layout by selecting the **Overlay** radio button. Now, if the wall structure is xreffed in some other drawing, the furniture layout will not appear.

One of the problems of using the **Attachment** option is that you cannot have a circular reference. For example, assume you are designing the plant layout of a manufacturing unit. One person is working on the floor plan, refer to Figure 2-13, and the second person is working on the furniture layout in the offices, refer to Figure 2-14. The names of the drawings are FLOORPLAN and OFFICES, respectively. The person working on the office layout uses the **Attachment** option to insert the FLOORPLN drawing so that he or she has the latest floor plan drawing. The person who is working on the floor plan wants to reference the OFFICES drawing.

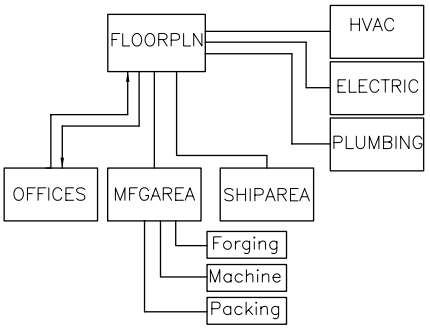

Figure 2-13 *Hierarchy of FLOORPLAN drawing*

Now, if the **Attachment** option is used to reference the drawings, AutoCAD displays an error message. This is because by attaching the OFFICES drawing, a circular reference is created. The AutoCAD message displayed is "**Circular references detected. Continue?**", as shown in Figure 2-15. If you choose the **No** button, the **External References Palette** tool is canceled and no drawing is referenced. But if you choose the **Yes** button, the following message **Breaking circular reference from "offices" to "current drawing"** is displayed at command line and the particular file you wanted to reference gets referenced.

Evaluation Copy. Do not reproduce. For information visit www.cadcim.com

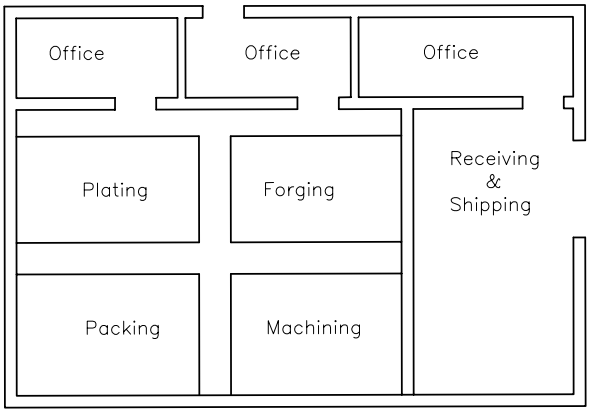

Figure 2-14 *Hierarchy of OFFICES drawing*

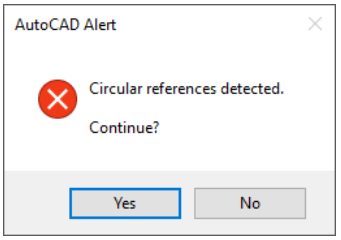

Figure 2-15 *The* ***AutoCAD Alert*** *message box*

However, to overcome this problem of circular reference, you can use the **Overlay** option to overlay the OFFICES drawing. This is a very useful option because the **Overlay** option allows different operators avoid circular reference and share the drawing data without affecting the drawing. Overlaying allows you to view a referenced drawing without having to attach it to the current drawing. This option can be invoked by selecting the **Overlay** radio button in the **Attach External Reference** dialog box, which is displayed after you have selected a drawing to reference. Also, when a drawing that has a nested overlay is overlaid, the nested overlay is not visible in the current drawing. This is another difference between attaching an xref and overlaying an xref to a drawing. This feature is especially useful when you want to reference a drawing that another user who is referencing your drawing does not need. Although the attachment will reference the nested reference too, the overlay option ignores nested references.

In AutoCAD, you can change an external referenced file from attachment to overlay and vice-versa. To do so, select the file from the **EXTERNAL REFERENCES** palette and right-click on it; a shortcut menu will be displayed, refer to Figure 2-16. Hover the cursor on the **Xref Type** option in the shortcut menu; two options are displayed, **Attach** and **Overlay**. Select the option as per requirement. The selected file will become attachment or overlay as per the option selected. You can change the type of multiple reference files by selecting all of them and then right-clicking on them.

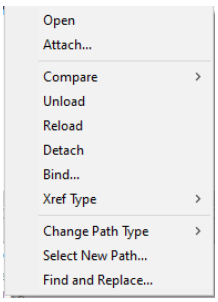

Figure 2-16 *The shortcut menu*

Evaluation Copy. Do not reproduce. For information visit www.cadcim.com

Example 1 *Attachment and Overlay*

In this example, you will use the **Attachment** and **Overlay** options to attach and reference the drawings. Two drawings, PLAN and PLANFORG are given. The PLAN drawing, refer to Figure 2-17, consists of the floor plan layout, and the PLANFORG drawing, refer to Figure 2-18 has the details of the forging section only. The CAD operator who is working on the PLANFORG drawing wants to xref the PLAN drawing for reference. Also, the CAD operator working on the PLAN drawing should be able to xref the PLANFORG drawing to complete the project. The following steps illustrate how to accomplish the defined task without creating a circular reference.

Download these files from https://www.cadcim.com. The path of the files is as follows: *Textbooks > CAD/CAM > AutoCAD Advanced > Advanced AutoCAD 2025: A Problem-Solving Approach, 3D and Advanced > Input Files > c02_acad_2025_3d_inp.*

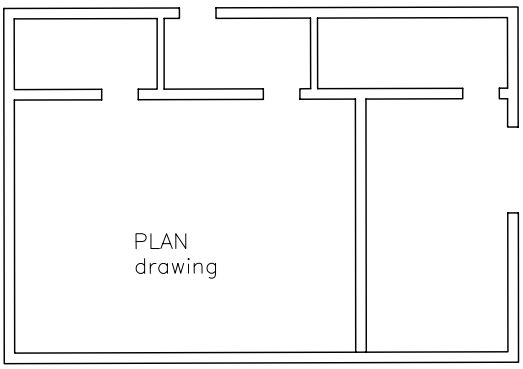

Figure 2-17 *The PLAN drawing*

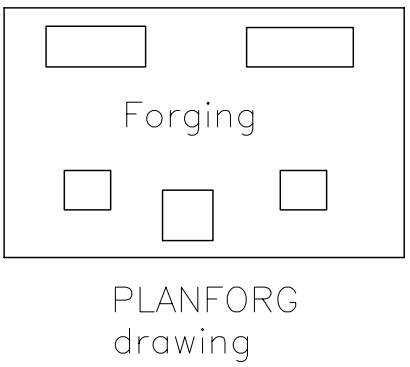

Figure 2-18 *The PLANFORG drawing*

How circular reference is caused?

1. Open the drawing PLANFORG and then choose the **External References Palette** button from the **Palettes** panel in the **View** tab. Next, choose the **Attach DWG** option from the **EXTERNAL REFERENCES** palette; the **Select Reference File** dialog box is displayed. Select the PLAN drawing from the list box of the **Select Reference File** dialog box and choose the **Open** button; the **Attach External Reference** dialog box is displayed. In this dialog box, the name of the PLAN drawing is displayed in the **Name** edit box, and the **Attachment** radio button is selected by default in the **Reference Type** area. Choose the **OK** button to exit the dialog box and specify an insertion point on the screen. Now, the drawing consists of the PLANFORG and PLAN. Save the drawing.

2. Open the drawing file PLAN. Next, choose the **External References Palette** button and attach the PLANFORG drawing to the PLAN drawing using the same steps as described in Step 1. AutoCAD will display the message that the circular reference has been detected and will ask you if you want to continue. If you choose **Yes** in the AutoCAD message box, the circular reference is broken and you are allowed to reference the specific drawing.

Evaluation Copy. Do not reproduce. For information visit www.cadcim.com

The possible solution for the operator working on the PLANFORG drawing is to detach the PLAN drawing. This way the PLANFORG drawing does not contain any reference to the PLAN drawing and would not cause any circular reference. The other solution is to use the **Overlay** option, as follows:

How to prevent circular reference?

3. Open the PLANFORG drawing, refer to Figure 2-19 and select the **Overlay** radio button in the **Attach External Reference** dialog box, which is displayed after you have selected the PLAN drawing to reference. The PLAN drawing is overlaid on the PLANFORG drawing, refer to Figure 2-20. Save the drawing.

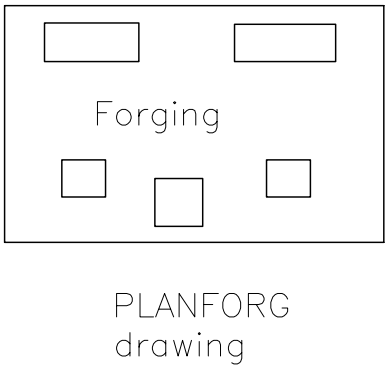

Figure 2-19 *The PLANFORG drawing*

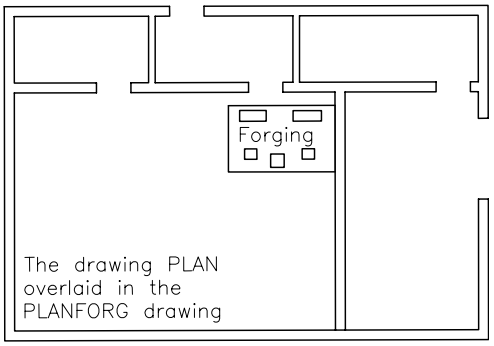

Figure 2-20 *The PLANFORG drawing after overlaying the PLAN drawing*

4. Open the drawing file PLAN, refer to Figure 2-21, and select the **Attachment** radio button in the **Attach External Reference** dialog box, which is displayed when you select the PLANFORG drawing in the **Select Reference File** dialog box to attach it as an xref to the PLAN drawing. You will notice that only the PLANFORG drawing is attached, refer to Figure 2-22. The drawing that was overlaid in the PLANFORG drawing (PLAN) does not appear in the current drawing. This way, the CAD operator working on the PLANFORG drawing can overlay the PLAN drawing, and the CAD operator working on the PLAN drawing can attach the PLANFORG drawing, without causing a circular reference.

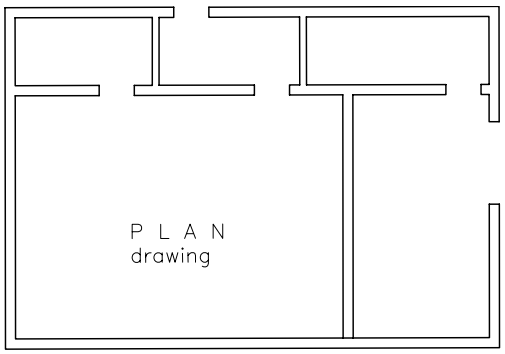

Figure 2-21 *The PLAN drawing*

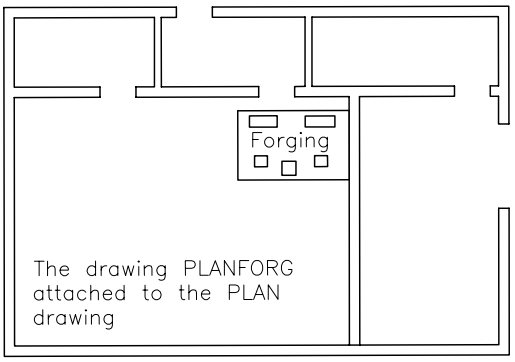

Figure 2-22 *The PLAN drawing after attaching the PLANFORG drawing*

Evaluation Copy. Do not reproduce. For information visit www.cadcim.com

ATTACHING FILES TO A DRAWING

Ribbon: Insert > Reference > Attach **Command:** ATTACH

You can use the **Attach** tool in the **Reference** panel, refer to Figure 2-23, to attach a DWG, DGN, DWF, PDF, Autodesk Point Cloud files, Navisworks files, or image file without invoking the **EXTERNAL REFERENCES** palette. Using this tool, you can attach a drawing file easily, since most of the xref operations involve simply attaching a drawing file. When you invoke this tool, AutoCAD displays the **Select Reference File** dialog box. To attach a *.dwg, .dgn, .dwf, .pdf, .rcp, rcs, .nwc, .nwd*, or image file, specify it in the **Files of type** drop-down list in the **Select Reference File** dialog box; the corresponding files will be listed in the dialog box. Select the drawing file to be attached and choose the **Open** button; the **Attach External Reference** dialog box is displayed. Select the **Attachment** radio button (if not selected by default) under the **Reference Type** area. You can specify the insertion point, scale, and rotation angle on screen or in the respective edit boxes.

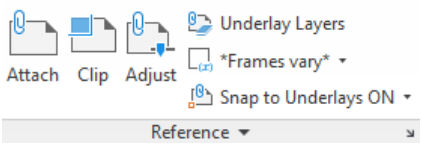

Figure 2-23 *The* ***Attach*** *tool in the* ***Reference*** *panel*

Note

1. To select a .dgn, .dwf, .pdf, or image file, specify the file type in the ***Files of type*** *drop-down list in the* ***Select Reference File*** *dialog box; the files will be attached as an underlay. Underlays are discussed in the next section.*

2. AutoCAD maintains a log file (.xlg) for xref drawings if the ***XREFCTL*** *system variable is set to 1. This file lists information about the date and time of loading and other xref operations to be completed. This .xlg file is saved in the current drawing with the same name as the current drawing and is updated each time the drawing is loaded or any xref operations are carried out.*

WORKING WITH UNDERLAYS

You can attach a DWF, DGN, or PDF file as an underlay to the current drawing file. The underlay files are not a part of original drawing files. Therefore, if you add a file as an underlay, it does not increase the file size of the current drawing. The procedure to add a file as an underlay is similar to attaching a drawing file using the **Attach** tool. After you select the file to attach, the **Attach <XXXX> Underlay** dialog box will be displayed, where <XXXX> is the file type. Figure 2-24 shows the **Attach PDF Underlay** dialog box that is displayed on selecting a pdf file from the **Select Reference File** dialog box.

If the selected *.pdf* file has multiple pages, all pages of the pdf file are listed in the **Select one or more pages from the PDF file** area. Select the pages to be attached from this area. If you have selected multiple pages as well as the **Specify on-screen** check box from the **Insertion point** area, then you are prompted to specify different insertion points for different pages.

The files attached as an underlay behave like blocks. The general modify commands like move, copy, rotate, mirror, and so on can be applied on them. However, you cannot bind a file that is attached as an underlay or modify the attached file in the current drawing file.

Evaluation Copy. Do not reproduce. For information visit www.cadcim.com

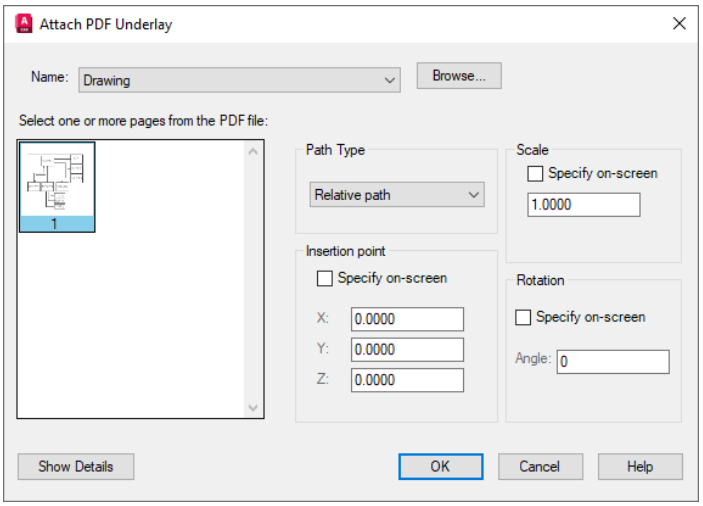

Figure 2-24 *The* ***Attach PDF Underlay*** *dialog box*

Editing an Underlay

As discussed earlier, you cannot edit a file that is attached as an underlay. However, you can control the appearance of the underlay by adjusting the contrast, fade, and monochrome display. To do so, select the attached object; a contextual tab will be displayed. Figure 2-25 shows the **PDF Underlay** tab that is displayed on selecting a PDF file.

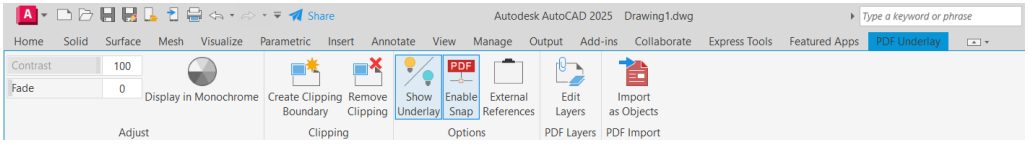

Figure 2-25 *The* ***PDF Underlay*** *tab*

You can use the options in this contextual tab to adjust the fade, contrast, and monochrome display of the underlay. You can create a new clipping boundary similar to that of an attached drawing. By default, the **Enable Snap** button is chosen in the **Options** panel. Therefore, you can snap entities in the underlaid object. If you deselect this button, you cannot snap entities in the underlaid objects. You can use the **Show Underlay** button from the **Options** panel to display/hide the underlaid objects. Both **Enable Snap** and **Show Underlay** are toggle buttons. If the attached underlay has layers, you can hide/display the selected layers. To do so, choose the **Edit Layers** button from the **PDF Layers** panel of the **PDF Underlay** contextual tab; the **Underlay Layers** dialog box will be displayed, as shown in Figure 2-26. If multiple drawings are attached as an underlay, all file names will be listed in the **Reference Name** drop-down list. Select the file from the **Reference Name** drop-down list for which you need to hide the layers; the corresponding layers will be listed in the list box. Click on the bulb icon of the layer to be hidden. Alternatively, select the layer from the list box and right-click; a shortcut menu will be displayed. Choose the **Layer(s) Off** option to hide the selected layer. To hide multiple layers, press the Ctrl key and select the layers to be hidden. Next, choose **Layer(s) Off**. Then, choose the **OK** button to exit the **Underlay Layers** dialog box.

Evaluation Copy. Do not reproduce. For information visit www.cadcim.com

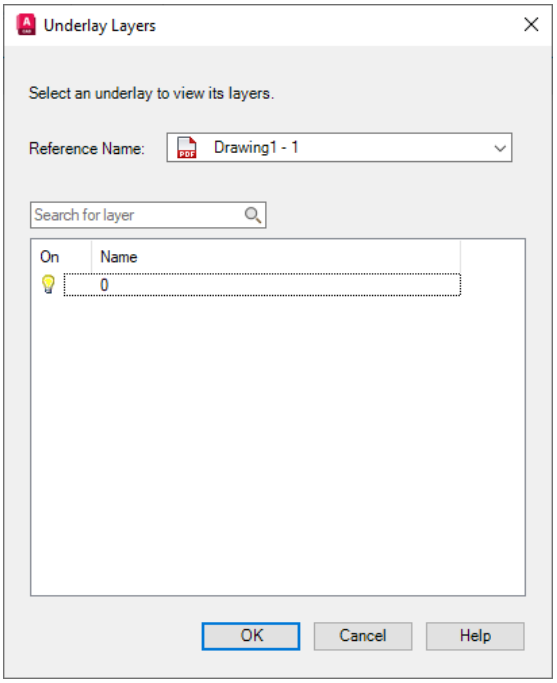

Figure 2-26 *The* ***Underlay Layers*** *dialog box*

If you have attached a file as an underlay, you can invoke the **Underlay Layers** dialog box without invoking the contextual tab by choosing the **Underlay Layers** tool from the **Reference** panel in the **Insert** tab. Similarly, you can switch on/off the OSNAP settings for the drawing that are underlaid by choosing the **Snap to Underlays ON / Snap to Underlays OFF** tool, respectively from the **Snap to Underlays** drop-down in the **Reference** panel. You can import the geometry, fills and hatches, raster images, and TrueType text objects from a specified PDF file by choosing the **Import as Objects** button from the **PDF Import** panel of the **PDF Underlay** contextual tab.

Note

If there are more underlays of different file types and you have set different osnap setting for each file type, then the ***Underlay Osnap's Vary*** *tool will be activated in the* ***Snap to Underlays*** *drop-down in the* ***Reference*** *panel. However, if you choose the* ***Snap to Underlays ON / Snap to Underlays OFF*** *tool, the corresponding osnap setting will be applied to all underlays.*

OPENING AN XREFFED OBJECT IN A SEPARATE WINDOW

If you are in the host drawing and you want to open a selected xreffed object in a separate window without using the **Select File** dialog box, you can use the **Open Reference** tool available in the **External Reference** contextual tab which is displayed on selecting an external reference. Select the xreffed object that you want to open in a separate window. When you select the desired xref, AutoCAD opens the DWG file of the xreffed object in a separate window. You can now make the desired changes in the DWG file of the xreffed object. Save the changes and then close

Evaluation Copy. Do not reproduce. For information visit www.cadcim.com

the drawing. When you open the host drawing, you will notice that the **Manage xrefs** displays a message that the external reference file has changed and the xreffed drawing needs to be reloaded. Reload the xreffed drawing using the **EXTERNAL REFERENCES** palette and you will notice that the host drawing is updated.

USING THE DesignCenter TO ATTACH A DRAWING AS AN XREF

The **DESIGNCENTER** can also be used to attach an xref to a drawing. To do so, choose the **DesignCenter** button from the **Palettes** panel in the **View** tab; the **DESIGNCENTER** palette will be displayed. In the **DESIGNCENTER** palette, choose the **Tree View Toggle** button, if it is not chosen already, to display the tree pane. Expand the **Tree view** and double-click on the folder whose contents you want to view. The contents of the selected folder are displayed in the palette. From the thumbnails of drawings displayed on the right-side of the palette, right-click on the drawing to be attached as an xref; a shortcut menu is displayed, refer to Figure 2-27. Choose **Attach as Xref** from the shortcut menu; the **Attach External Reference** dialog box will be displayed. Alternatively, you can also use the right mouse button to drag and drop the drawing into the current drawing; a shortcut menu will be displayed. Choose the **Create Xref** option to insert the drawing as an xref.

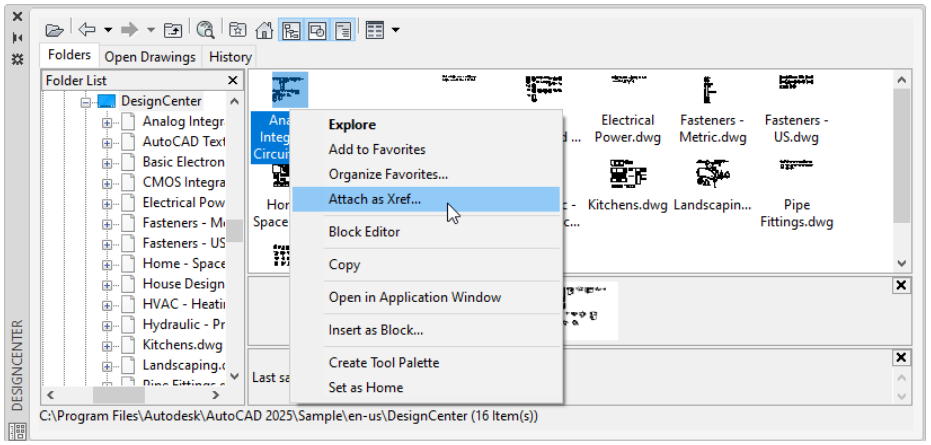

Figure 2-27 *The shortcut menu displayed*

In the **Attach External Reference** dialog box, the **Name** drop-down displays the name of the selected file to be inserted as an xref. Select the **Attachment** radio button in the **Reference Type** area, if not already selected. Specify the **Insertion point**, **Scale**, and **Rotation** in the respective edit boxes or select the **Specify On-screen** check boxes to specify this information on the screen. Choose the **OK** button to exit the dialog box; the selected object is attached as an xref to the current drawing.

Evaluation Copy. Do not reproduce. For information visit www.cadcim.com

ADDING XREF DEPENDENT NAMED OBJECTS

Menu Bar: Modify > Object > External Reference > Bind
Toolbar: Reference > Xbind **Command:** XB/XBIND



You can use the **Xbind** tool to add the selected named objects such as blocks, dimension styles, layers, line types, and text styles of the xref drawing to the current drawing. The following example describes the use of this command.

1. Load the drawing Bearing that was created earlier. Make sure the drawing has the following layer setup. Otherwise, create the following layers using the **LAYER PROPERTIES MANAGER**.

Layer Name	Color	Linetype
0	White	Continuous
Object	Red	Continuous
Hidden	Blue	Hidden2
Center	White	Center2
Hatch	Green	Continuous

2. Draw a circle and create it as a block with the name SIDE. Save the drawing as Bearing.

3. Start a new drawing with the following layer setup:

Layer Name	Color	Linetype
0	White	Continuous
Object	Red	Continuous
Hidden	Green	Hidden

4. Use the **Attach** tool in the **Reference** panel to attach the Bearing drawing to the current drawing. When you xref the drawing, the layers will be added to the current drawing, as discussed earlier in this chapter.

5. Now, invoke the **Xbind** tool; the **Xbind** dialog box is displayed. This dialog box has two areas with list boxes. They are **Xrefs** and **Definitions to Bind**. If you want to bind the blocks defined in the xref drawing Bearing, first click on the plus sign adjacent to the xref Bearing; the icons for the named objects in the drawing are displayed in a tree view, refer to Figure 2-28. Click on the plus sign next to the Block icon. AutoCAD lists the blocks defined in the xref drawing (Bearing). Select the block Bearing|SIDE and then choose the **Add** button. The block name will be added to the **Definitions to Bind** list box. Choose the **OK** button to exit the dialog box. AutoCAD will bind the block with the current drawing and a message is displayed at the command prompt: **1 Block(s) bound**. The name of the block will change to Bearing0SIDE. You can invoke the **Block Definition** dialog box by choosing the **Create Block** tool in the **Block Definition** panel and check the **Name** drop-down list to see if the block with the name Bearing0SIDE has been added to the drawing. If you

Evaluation Copy. Do not reproduce. For information visit www.cadcim.com

want to insert the block, you must enter the new block name (Bearing0SIDE). You can also rename the block to another name that is easier to use.

If the block contains a reference to another xref drawing, AutoCAD binds that xref drawing and all its dependent symbols to the current drawing also. Once you bind the dependent symbols, AutoCAD does not delete them, not even when the xref drawing is detached. For example, the block Bearing0SIDE will not be deleted even when you detach the xref drawing or end the drawing session.

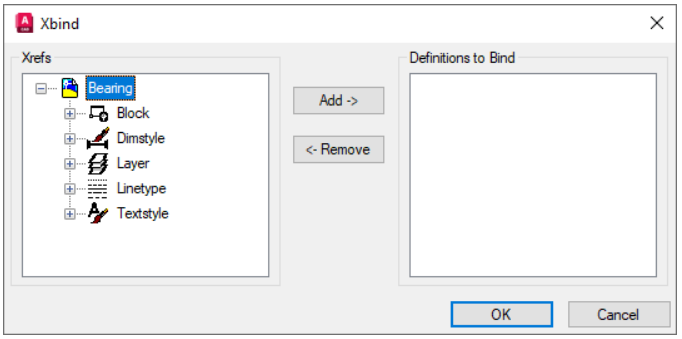

Figure 2-28 *The named objects in the* ***Xbind*** *dialog box*

You can also use the **-XBIND** command to bind the selected dependent symbols of the xref drawing using the command prompt.

6. Similarly, you can bind the dependent symbols, Bearing|Standard (textstyle), Bearing|Hidden, and Bearing|Object layers of the xref drawing. Click on the plus signs adjacent to the respective icons to display the contents and then select the layer or textstyle you want to bind and choose the **Add** button. The selected named objects are displayed in the **Definitions to Bind** list box. If you have selected a named object that you do not want to bind, select it in the **Definitions to Bind** list box and choose the **Remove** button. Once you have finished selecting the named objects that you want to bind to the current drawing, choose the **OK** button. A message indicating the number of named objects that are bound to the current drawing is displayed at the command prompt.

Once bound, the layer names will change to Bearing0Hidden and Bearing0Object. If the layer name Bearing0Hidden was already there, the layer will be named Bearing1Hidden. These two layers become a permanent part of the current drawing. Even if the xref drawing is detached or the current drawing session is closed, the layers are not discarded.

CLIPPING EXTERNAL REFERENCES

Ribbon: Insert > Reference > Clip **Command:** CLIP



The **Clip** tool (Figure 2-29) is used to trim an xref after it has been attached to a drawing to display only a portion of the drawing, refer to Figure 2-30. After you have attached an xref to a drawing, you can trim it to display only a portion of the drawing by using the **Clip** tool. However, clipping xref does not modify the referenced drawing. On invoking the **Clip** tool, you are prompted to select an object to clip. Select a DWG, DGN, IMAGE, or PDF; the respective clipping options will be displayed.

Evaluation Copy. Do not reproduce. For information visit www.cadcim.com

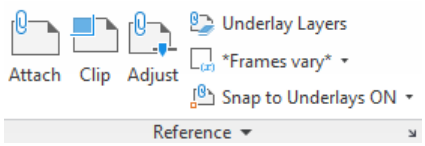

Figure 2-29 *The* ***Clip*** *tool in the* ***Reference*** *panel*

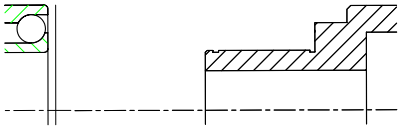

Figure 2-30 *Using the* ***Clip*** *tool to clip*

You can also invoke the **Clip** tool by selecting an xref and then right-clicking in the drawing area to display a shortcut menu. Next, choose the corresponding clip command from it. For example, to clip an attached *.dwg* file, select the attached *.dwg* file, right-click, and choose the **Clip Xref** option; the following prompt sequence will be displayed.

Enter clipping option [ON/OFF/Clipdepth/Delete/generate Polyline/New boundary] <New>: *Press Enter to specify a new clip boundary or enter an option.*
Specify clipping boundary or select invert option: [Select polyline/Polygonal/Rectangular/Invert clip] <Rectangular>: *Press Enter to select the* ***Rectangular*** *option, and then specify two corners of the rectangular boundary.*

You can also right-click in the drawing area at the enter clipping option prompt to display a shortcut menu. This shortcut menu displays all the options available at the command prompt that can be selected here. All the clipping options available are discussed next.

New boundary

The clipping boundary can be specified by using the **Rectangular**, **Polygonal**, or **Select polyline** option. The **Rectangular** option generates a rectangular boundary and the **Polygonal** option allows you to specify a boundary of any shape. You can draw a boundary using the **Polyline** tool or the **Polygon** tool and then, use the **Select polyline** option to select this polyline as the clipping boundary. The **Invert clip** option inverts the direction of the clipping. For example, if the objects outside the clipping boundary are hidden, by default, the **Invert clip** option will hide the objects inside the clipping boundary and display the objects outside the boundary. After selecting the **Invert clip** option, you need to redefine the clipping boundary using any one of the options discussed above. The **Invert clip** option can only be used with the 2D Wireframe visual style. If a boundary already exists, AutoCAD will ask you if the old boundary should be deleted. You can enter **YES** if you want to delete the old boundary and define a new one. If you enter **NO**, the old boundary is retained and the **Clip Xref** tool exits.

ON/OFF

The **ON/OFF** option allows you to specify whether to display the clipped portion or not. When the clipping boundary is off, you can see the complete xref drawing and when it is on, the drawing that is within the clipping polygon is displayed.

Delete

The **Delete** option completely deletes the predefined clipping boundary and the entire xref gets displayed. The **Erase** tool cannot be used to delete the clipping boundary.

Evaluation Copy. Do not reproduce. For information visit www.cadcim.com

generate Polyline

If you have a clipped boundary, select this option to create a polyline coinciding with the boundary of the clipped xref drawing. You can edit the polyline boundary without affecting the clipped drawing. For example, if you stretch the boundary, it does not affect the xref drawing. The edited boundary can be used later to specify a new clipping boundary.

Clipdepth

This option allows you to define the front and back clipping planes for 3D xref objects or blocks. The objects between the front and back planes will be displayed, refer to Figure 2-31 and Figure 2-32. In the figures that follow, the clipping boundary is defined aligned to the front face of the object, and therefore, the clipping planes will get defined parallel to it. The xref must contain a clip boundary before specifying a clip depth. If you use the **Clipdepth** option, it prompts you to specify a front clip point and a back clip point. Specifying these points, creates a clipping frame passing through them and parallel to the clipping boundary. If the front clipping plane is specified behind the back clipping plane, AutoCAD displays an error message and the clipdepth is also not applied. The **Distance** option for specifying the front or back clip points creates a clipping plane at a specified distance from the clipping boundary parallel to it. The **Remove** option removes both the front and back clipping planes and the entire object is visible.

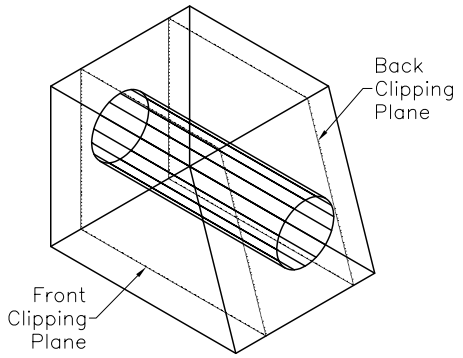

Figure 2-31 *3D xref object before clipping*

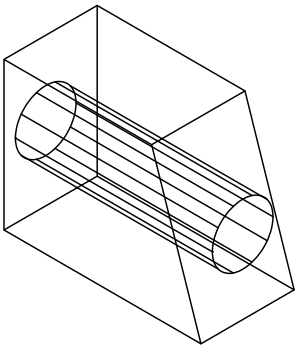

Figure 2-32 *3D xref object after clipping*

Similarly, you can clip the other underlaid xrefs. The options available for clipping the underlaid Xrefs are **ON**, **OFF**, **Delete**, and **New Boundary**. These options are the same as discussed above.

DISPLAYING CLIPPING FRAME

You can select the appropriate option from the **Frames** drop-down list in the **Reference** panel of the **Insert** tab, refer to Figure 2-33, to turn on or off the display of clipping boundary of all clipped Xrefs. If there are multiple underlays of different file types and you have set different frame settings for each file type, then the **Frames vary** button will be displayed in the **Reference** panel of the **Insert** tab. You can also use the **FRAME** system variable to turn on or off the display of clipping boundary of all clipped xrefs. When the value of **FRAME** system variable is 0, the clipping boundary will neither be displayed or plotted. When it is 1, the clipping boundary will be displayed and plotted. When it is 2, the clipping boundary will be displayed, but not plotted. When it is 3 (default), the settings vary for all the clipping boundaries. To control the display of frames of individual attached Xrefs, you need to invoke the individual system variables like **XCLIPFRAME**, **DGNFRAME**, **PDFFRAME**, and **IMAGEFRAME**.

Evaluation Copy. Do not reproduce. For information visit www.cadcim.com

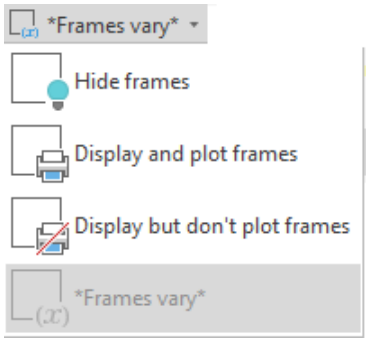

Figure 2-33 *Options in the* ***FRAME*** *drop-down list*

DEMAND LOADING

The demand loading feature loads only that part of the referenced drawing that is required in the existing drawing. For example, demand loading provides a mechanism by which objects on frozen layers are not loaded. Also, only the clipped portion of the referenced drawing can be loaded. This makes the xref operation more efficient since less disk space is used, especially when the drawing is reopened. Demand loading is enabled by default. You can modify its settings in the **External References (Xrefs)** area of the **Open and Save** tab of the **Options** dialog box, refer to Figure 2-34. You can select any of the three options available in the **Demand load Xrefs** drop-down list in this dialog box. These options are **Disabled**, **Enabled**, and **Enabled with copy**. These options correspond to a value of **0**, **1**, and **2** of the **XLOADCTL** system variable, respectively, and are discussed next.

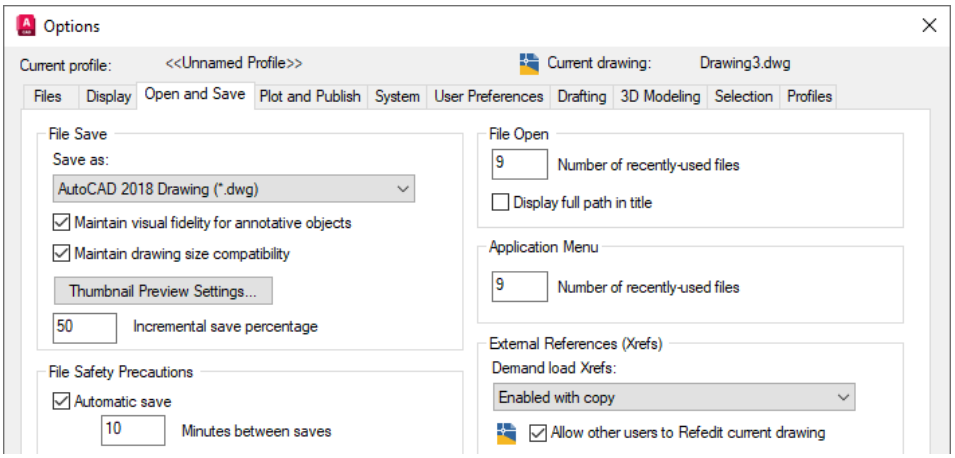

Figure 2-34 *Partial view of the* ***Options*** *dialog box with the* ***Open and Save*** *tab chosen*

Evaluation Copy. Do not reproduce. For information visit www.cadcim.com

Setting	Value of XLOADCTL	Features
Disabled	0	1. Turns off demand loading. 2. Loads entire xref drawing file. 3. The file is available on the server and other users can edit the xref drawing.
Enabled	1	1. Turns on demand loading. 2. The referenced file is kept open. 3. Makes the referenced file read-only for other users.
Enabled with copy	2	1. Turns on demand loading with the copy option. 2. A copy of a referenced drawing is opened. 3. Other users can access and edit the original referenced drawing file.

You can also set the value of **XLOADCTL** at the command prompt. When you are using the **Enabled with copy** option of demand loading, the temporary copies of the xref are saved in the AutoCAD temporary files directory (defined in the **Temporary External Reference File Location** folder in the **Files** tab of the **Options** dialog box) or in a user-specified directory. The **XLOADPATH** system variable creates a temporary path to store demand loaded Xrefs.

Spatial and Layer Indexes

As mentioned earlier, the demand loading improves performance when the drawing contains referenced files. To make it work effectively and to take full advantage of demand loading, you must store a drawing with Layer and Spatial indexes. The layer index maintains a list of objects in different layers and the spatial index contains lists of objects based on their location in 3D space.

Layer and spatial indexes are created using the **Save Drawing As** dialog box. Choose the **Options** option from the **Tools** drop-down to display the **Saveas Options** dialog box. Choose the **DWG Options** tab if it is not already chosen and select the type of index from the **Index type** drop-down list. **None** is the default option selected in the drop-down list. As a result, no indexes are created. The other options available are: **Layer**, **Spatial**, and **Layer & Spatial**. Once you have selected the type of index to create, choose the **OK** button to exit the dialog box and choose the **Save** button in the **Save Drawing As** dialog box to save the drawing with the indexes. The **INDEXCTL** variable also controls the creation of layer index and spatial index and its value can be set using the command prompt. The following are the settings of the **INDEXCTL** system variable, and they correspond to the **Index type** options available in the **DWG Options** tab of the **Save as Options** dialog box.

Evaluation Copy. Do not reproduce. For information visit www.cadcim.com

Setting	Features	Index Type option
0	No index created	None
1	Layer index created	Layer
2	Spatial index created	Spatial
3	Layer and spatial index created	Layer and Spatial

EDITING REFERENCES IN-PLACE

Ribbon: Insert > Reference > Edit Reference **Command:** REFEDIT
Toolbar: Refedit > Edit Reference In-Place

Often you have to make minor changes in the xref drawing if you want to save yourself from the trouble of going back and forth between drawings. In this situation, you can use in-place reference editing to select the xref, modify it, and then save it after modifications. The following steps explain the referencing editing process.

1. To edit in-place, select an external referenced object; the **External Reference** contextual tab will be added to the **Ribbon**, as shown in Figure 2-35. Choose the **Edit Reference In-Place** tool from the **Edit** panel; the **Reference Edit** dialog box will be displayed.

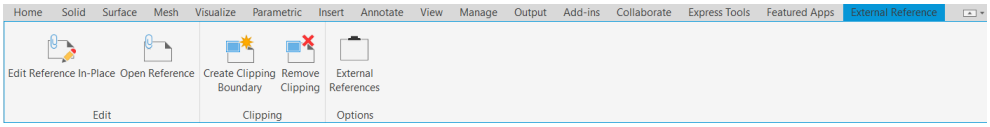

Figure 2-35** The **External Reference** contextual tab added to the **Ribbon

2. In the **Reference name** list box of the **Reference Edit** dialog box, the selected reference and its nested references are listed. Select the specific xref you wish to edit from the list.

3. In the **Settings** tab of the dialog box, select both the **Create unique layer**, **style**, **and block names** and the **Lock objects not in working set** check boxes. The **Display attribute definitions for editing** check box is disabled by default. In the **Identify Reference** tab of the dialog box, select the **Prompt to select nested objects** radio button. Choose the **OK** button to return to the current drawing. At the **Select nested objects:** prompt, select the objects you want to modify and press Enter. The objects that have not been selected for modifications will become faded. The fading is controlled by the **XFADECTL** system variable or by using the **Xref display** slider bar in the **Display** tab of the **Options** dialog box. You can add or remove objects to the working set by choosing the respective tools in the **Edit Reference** panel or by using the **REFSET** command. Once you have defined a working set, all the standard AutoCAD commands can be used to modify them.

4. When you choose the **Save Changes** tool in the **Edit Reference** panel, AutoCAD displays a message: **All references edits will be saved**. Choose the **OK** button to return to the drawing area. The modifications made are saved in the drawing as well as in the current drawing as a reference. On choosing the **Discard Changes** tool in the **Edit Reference** panel, the changes made will not be saved and the current drawing is redisplayed.

Evaluation Copy. Do not reproduce. For information visit www.cadcim.com



Note

*In the **External References (Xrefs)** area of the **Open and Save** tab of the **Options** dialog box, if you select the **Allow other users to Refedit current drawing** check box, the current drawing can be edited in-place by other users even when it is open and is being referenced by another file. This option is selected by default and can also be controlled by the **XEDIT** system variable. The default value of **XEDIT** is 1 and can be changed using the command prompt.*

Self-Evaluation Test

Answer the following questions and then compare them to those given at the end of this chapter:

1. The _____ are entries such as blocks, layers, and text styles.

2. If you use the **Insert** tool to insert a drawing, the information about the named objects is lost if the names are _____, and if the names are _____, the drawing will be imported.

3. The _____ option from the **Attach** drop-down list of the **EXTERNAL REFERENCES** palette is used to attach an xref drawing to the current drawing.

4. The _____ feature loads only that part of the referenced drawing that is required in the existing drawing.

5. The _____ option can be used to overcome the problem of circular reference.

6. After selecting the _____ option, the xref is completely removed from the current drawing.

7. If an assembly drawing has been created by inserting a drawing, the drawing will be updated automatically if a change is made in the inserted drawing. (T/F)

8. The external reference facility helps you keep a drawing updated no matter when the changes were made in the piece part drawings. (T/F)

9. Objects can be added to a dependent layer. (T/F)

10. The **Overlay** option ignores the nested references. (T/F).

Review Questions

Answer the following questions:

1. Which of the following features is used to reference an external drawing without making this drawing a permanent part of the existing drawing?

(a) demand loading (b) external reference
(c) external clipping (d) insert drawing

Evaluation Copy. Do not reproduce. For information visit www.cadcim.com

2. If an xref has nested references that cannot be found, which of the following will be displayed under the status heading of the **List View** button in the **EXTERNAL REFERENCES** palette?

   (a) **Orphaned** (b) **Not found**
   (c) **Unreferenced** (d) **Unresolved**

3. Which of the following system variables, when set to 1, will allow AutoCAD to maintain a log file (*.xlg*) for xref drawings?

   (a) **XLOADCTL** (b) **XLOADPATH**
   (c) **XREFCTL** (d) **INDEXCTL**

4. Which of the following system variables, when set to 0, will not allow the clipping boundary to be displayed?

   (a) **XCLIPFRAME** (b) **XLOADCTL**
   (c) **INDEXCTL** (d) **XREFCTL**

5. In the _____ drawings, the information regarding dependent symbols is not lost.

6. AutoCAD maintains a log file for xref drawings, if the _____ variable is set to 1.

7. It is possible to edit xrefs in-place using the _____ tool.

8. You can use the _____ tool to add the selected dependent symbols from the xref drawing to the current drawing.

9. If the xref drawings get updated, changes are not automatically reflected in the assembly drawing when you open an assembly drawing. (T/F)

10. There is a limit to the number of drawings you can reference. (T/F)

11. It is not possible to have nested references. (T/F)

12. Like blocks, the xref drawings can be scaled, rotated, or positioned at any desired location. (T/F)

13. You can change the color, linetype, or visibility (on/off, freeze/thaw) of a dependent layer. (T/F)

Evaluation Copy. Do not reproduce. For information visit www.cadcim.com

Exercise 1 *Bind Xref*

In this exercise, you will start a new drawing and xref the drawings as Part-1 and Part-2, refer to Figure 2-36 and Figure 2-37. For assembly, refer to Figure 2-38. You will also edit one of the piece parts to correct the size and use the **Bind Xref** option to bind some of the dependent symbols to the current drawing. The parameters of layers for Part-1, Part-2 and ASSEM1 are as follows:

For Part-1, set up the following layers:

Layer Name	Color	Linetype
0	White	Continuous
Object	Red	Continuous
Hidden	Blue	Hidden2
Center	White	Center2
Dim-Part1	Green	Continuous

For Part-2, set up the following layers:

Layer Name	Color	Linetype
0	White	Continuous
Object	Red	Continuous
Hidden	Blue	Hidden
Center	White	Center
Dim-Part2	Green	Continuous
Hatch	Magenta	Continuous

For ASSEM1, set up the following layers:

Layer Name	Color	Linetype
0	White	Continuous
Object	Blue	Continuous
Hidden	Yellow	Hidden

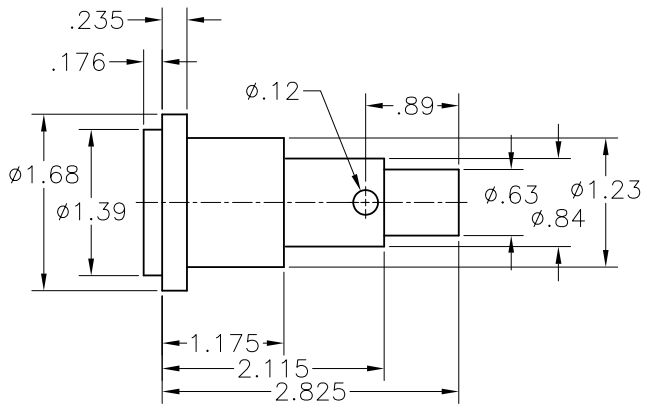

Figure 2-36 *Drawing of Part-1*

Evaluation Copy. Do not reproduce. For information visit www.cadcim.com

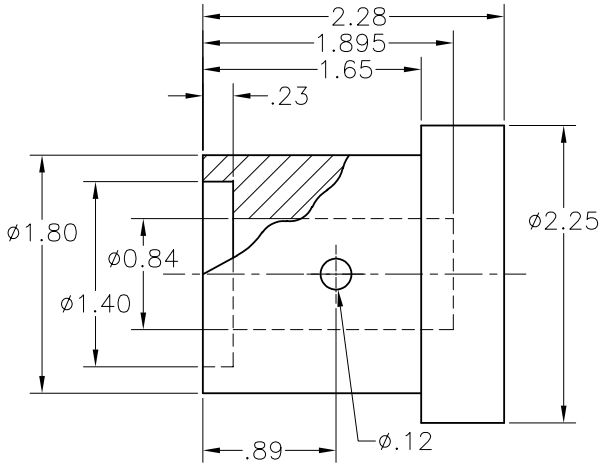

Figure 2-37 *Drawing of Part-2*

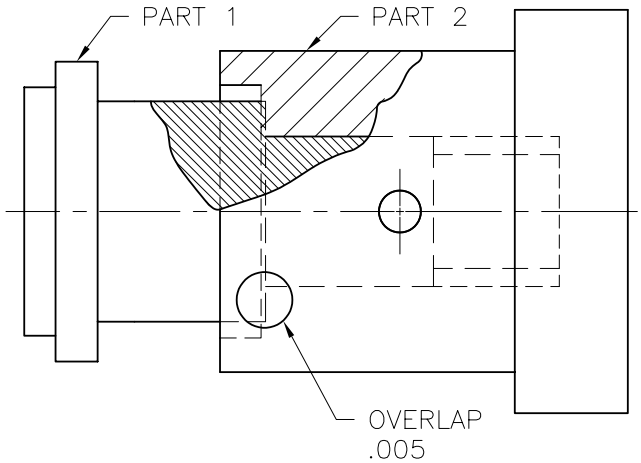

Figure 2-38 *Assembly drawing after attaching Part-1 and Part-2*

Evaluation Copy. Do not reproduce. For information visit www.cadcim.com

Answers to Self-Evaluation Test

1. named objects, **2.** duplicated, unique, **3. Attach DWG**, **4.** demand loading, **5. Overlay**, **6. Detach**, **7.** F, **8.** T, **9.** F, **10.** T

Evaluation Copy. Do not reproduce. For information visit www.cadcim.com