Chapter 18

Concepts of Geometric Dimensioning and Tolerancing

Learning Objectives

After completing this chapter, you will be able to:

- *Understand tolerances and allowances*
- *Understand tolerancing methods*
- *Understand datums, features, and material condition modifiers*
- *Understand geometric characteristics symbols*
- *Understand the form, orientation, position, profile, and runout tolerances*
- *Understand fits*

Key Terms

- *Basic Size*
- *Limit Dimensioning*
- *Plus and Minus Tolerancing*
- *Tolerances*
- *Geometric Characteristics*
- *Maximum Material Condition (MMC)*
- *Least Material Condition (LMC)*
- *Regardless of Feature Size*
- *Feature Control Frame*
- *Form Tolerances*
- *Profile Tolerances*
- *Orientation Tolerances*
- *Location Tolerances*
- *Runout Tolerances*
- *Inch Fits*
- *Metric Fits*

HISTORY OF TOLERANCES AND ALLOWANCES

The history of engineering drawing extends over a period of 6000 years but the practice of tolerancing and dimensioning was introduced for the first time only about 80 years ago. Gradually, engineers and designers realized that exact dimensions and shapes could not be attained in shaping physical objects. Therefore, a feasible scheme of interchangeable manufacturing that was crucial to mass production methods was established. During this era, skilled handicrafters, designers, and engineers took pride in the ability to work with exact dimensions. However, the use of modern measuring instruments showed deviations from the sizes which were earlier believed to be exact.

At the starting of industrial age it was realized that variations in the sizes of parts had always been present and such variations could be restricted but not avoided. The slight variation in the size which a part was originally intended to have could be tolerated without impairment of its correct functioning. It became evident that interchangeable parts need not be identical parts, but rather it would be sufficient if the significant sizes that controlled their fits lay between definite limits. The problem of manufacturing interchangeable parts was resolved by holding the parts between two limiting sizes lying so closely that any intermediate size is acceptable.

The concept of limits essentially means that a precisely defined basic condition is replaced by two limiting conditions and any result lying on or between these two limits is acceptable.

In order to calculate limits and tolerances, following definitions must be clearly understood.

Basic Size (Basic Dimension)

Basic size or basic dimension is theoretically the exact value of dimension for which the limits are derived with the help of allowance and tolerance.

Limits of Dimension

The limits of dimension are the maximum and minimum values permitted for a specific dimension.

Allowance

The allowance is the intentional difference applied in the basic size of mating parts. Allowance can also be defined as the minimum clearance (positive allowance) or maximum interference (negative allowance) between the mating parts.

Tolerance

Tolerance is the total permissible variation in a given dimension. It is the difference between maximum and minimum limits.

METHODS OF TOLERANCING

Tolerances are expressed using one of the two methods: limit dimensioning or plus and minus tolerancing. These methods apply to both inch and metric drawings.

Limit Dimensioning

In the limit dimensioning method, only the maximum and minimum dimensions are specified. When dimensions require greater accuracy than a general note provides, individual tolerances or limits are shown for that dimension. During placement of dimensions, the larger dimension is placed above the lower dimension, refer to Figure 18-1. When limit dimensions are used for diameter or radial features and are placed above each other, only one diameter or radius symbol is used which is located at midheight, refer to Figure 18-1.

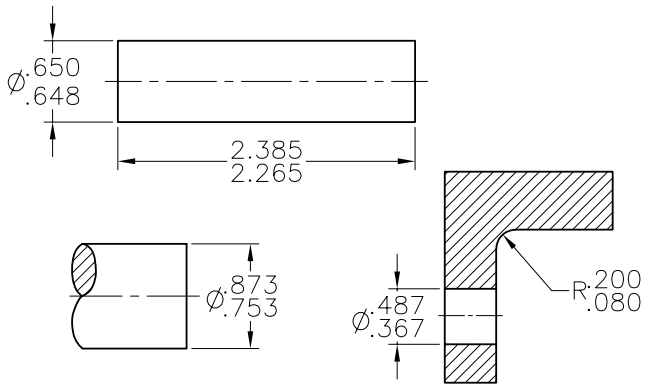

Figure 18-1 *Placement of limit dimensions*

If a maximum dimension has digits to the right of the decimal point, you need to add zeros to the minimum dimension after the decimal point and vice versa. This means that both the limits are expressed to the same number of decimal places, as shown in Figure 18-2.

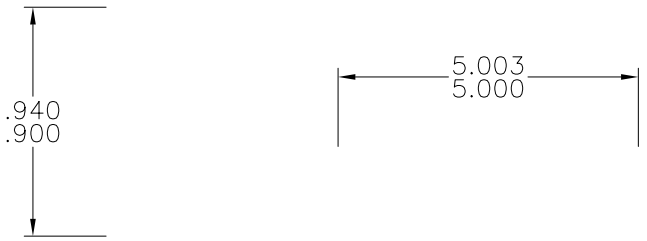

Figure 18-2 *Limit dimensioning with equal digits after the decimal*

When a dimension is shown with a leader and is placed in one line, the smaller size is shown first and a small dash separates the two limits, refer to Figure 18-3.

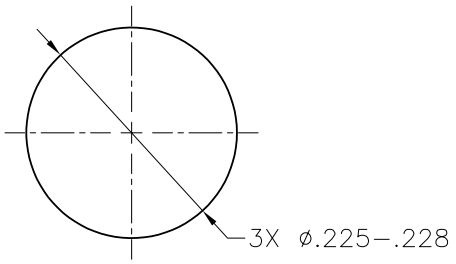

Figure 18-3 *Limit dimensioning of a circular feature*

For the case where only one limit is important and any variation from that limit in the other direction may be permitted, the MAX (maximum) or MIN (minimum) can be specified with the dimension value, as shown in Figure 18-4.

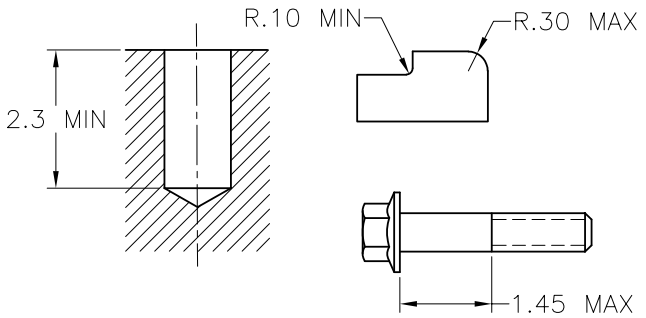

Figure 18-4 *Limit dimensioning with single limit*

Plus and Minus Tolerancing

In this method, the dimension is mentioned first and it is followed by a plus and minus tolerance expression. If the tolerance is expressed in plus and minus values then it is called bilateral tolerance, refer to Figure 18-5. The values of plus and minus limits need not be the same for bilateral tolerance.

If the tolerance is expressed with one value in plus or minus and the second one in zero then it is called as unilateral tolerance. A unilateral tolerance is the one that is applied in one direction such that the permissible variation in the other direction is zero, refer to Figure 18-5.

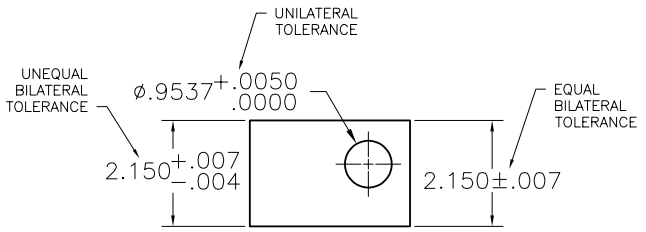

Figure 18-5 *Plus and minus tolerancing*

GEOMETRIC TOLERANCES

The intent of an engineering drawing is to convey information of the manufactured part from the designer to the manufacturer and inspector. Hence, an engineering drawing must contain all information necessary for the correct manufacturing of the part. It must also enable the inspector to determine precisely whether the finished parts are acceptable or not. Therefore, each drawing must convey three essential types of information: the material to be used, the size or dimensions of the part, and the shape or geometric characteristics of the part. The drawing must also specify the permissible variation of size and form.

A geometric tolerance is the maximum permissible variation of form, profile, orientation, or location of a feature from is indicated or specified in the drawing of that part. The tolerance

value specifies that a feature would be allowed to have any variation of form or take up any position within the specified geometric tolerance zone. The tolerance value represents the width or diameter of the tolerance zone within which the point, line, or surface of the feature should lie. For example, a line controlled in a single plane by a straightness tolerance of .005 inch must lie within .005 inch wide zone, as shown in Figure 18-6.

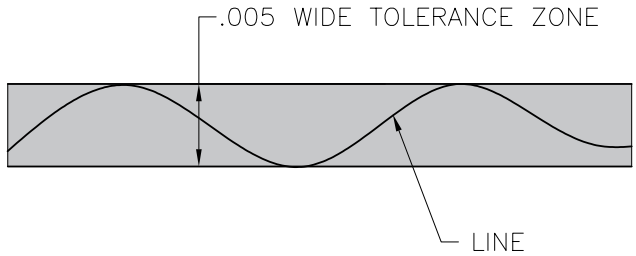

Figure 18-6 *Tolerance zone for straightness of a line*

The actual size of a feature must be within the size limits specified on the drawing. Each measurement made at any cross-section of the feature must not be greater than the maximum limit of size nor smaller than the minimum limit of size, refer to Figure 18-7(a) and Figure 18-7(b).

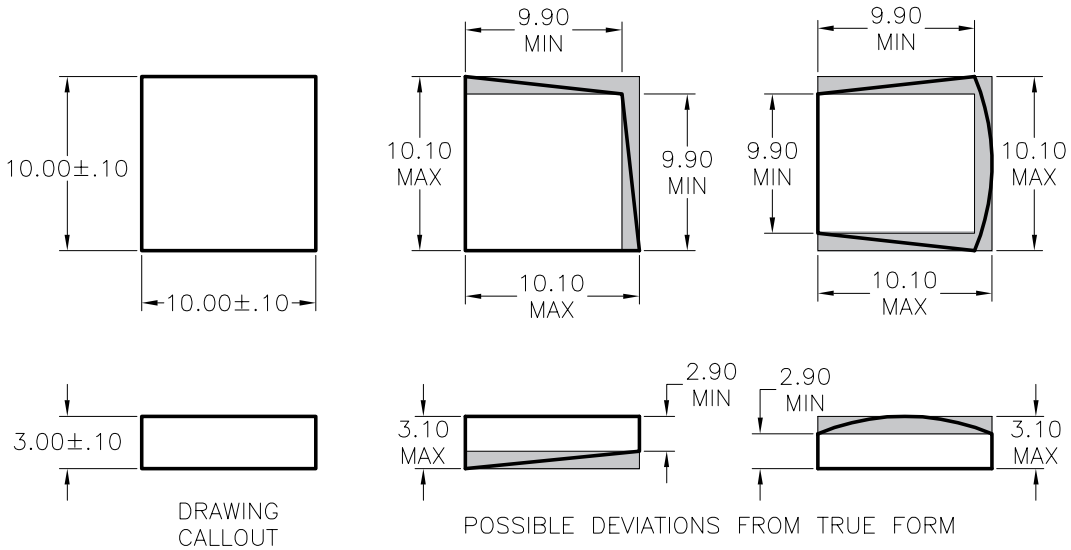

Figure 22-7(a) *Deviation of shape for flat features*

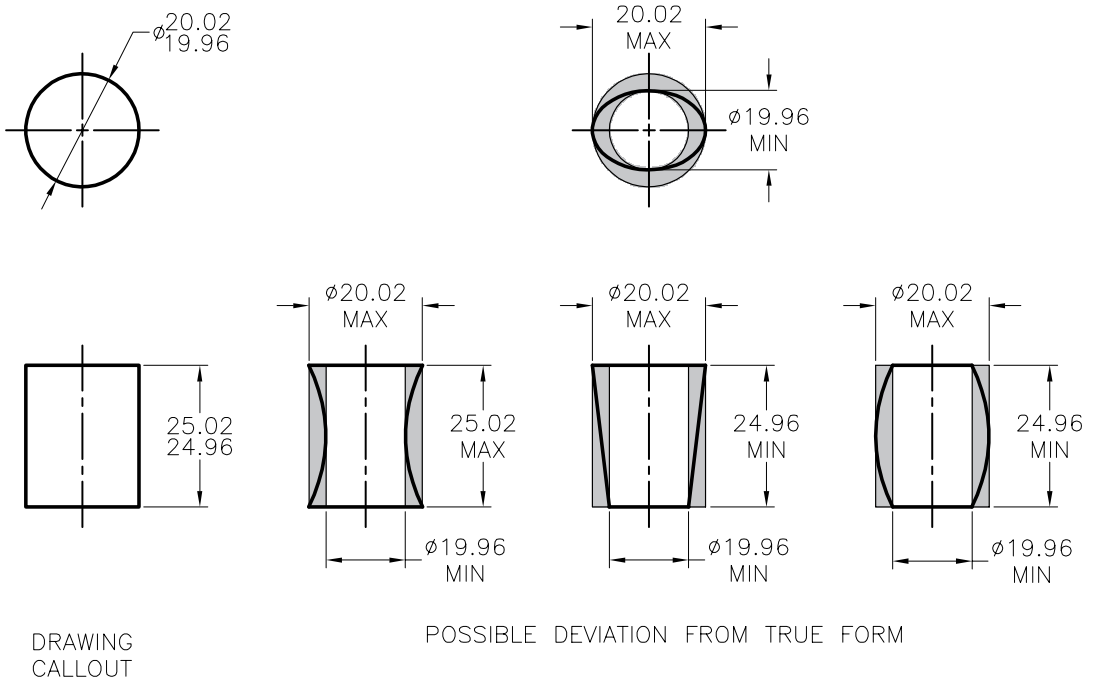

Figure 22-7(b) *Deviation of shape for cylindrical features*

Although each part is manufactured within the prescribed tolerance zones, the parts may not fit together because of deviation from their geometric form.

In order to meet functional requirements, it is often necessary to control the errors of form, including roundness and flatness as well as deviation from true size. To avoid any bending or deformation between mating parts, such as holes and shafts, it is usually necessary to ensure that they do not interfere the boundary of perfect form at their maximum material condition (the smallest hole or the largest shaft). Figure 18-8 shows deviation of form at the maximum material condition for shaft and holes.

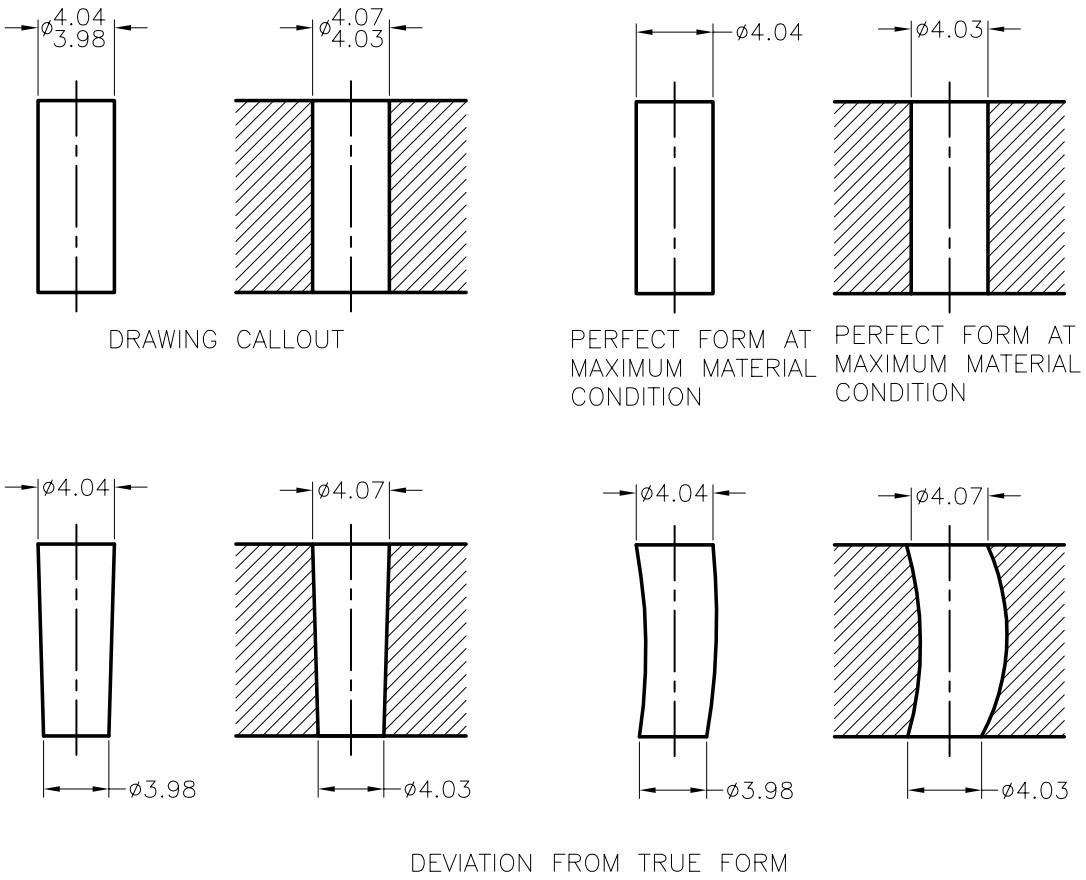

Figure 18-8 *Deviation of form at the maximum material condition*

Datums

Datums are imaginary references which are used to establish the location or geometric relationship between features of a part. The design of a part consists of many datums, each of which is a geometrically perfect form. A datum can be a straight line, a circle, a flat plane, a sphere, a cylinder, a cone, or a single point. As established from actual features, datums are assumed to be "exact" for the purpose of computation or reference.

Features

Features are real geometric shapes that make up the physical characteristics of a part. Features are specific component portions of a part which may include one or more surfaces such as holes, screw threads, profiles, faces, or slots.

Datum Reference Frame

Engineering, Manufacturing, and Inspection, all share a common three plane concept. These three planes are mutually perpendicular, perfect in dimension and orientation, and are exactly 90 degrees to each other. In geometric tolerancing, it is referred as Datum Reference Frame. The DRF consists of a system of features which are considered as the basis for dimensions for manufacturing and inspection. It provides complete orientation or a skeleton to which the

part requirements are attached. The three main features of the datum reference frame are the planes, axes, and points.

Figure 18-9 shows a rectangular part fitted into the corner represented by the intersection of the three datum planes. The datum planes are imaginary and therefore perfect. They are considered as absolute reference base. There is a primary, a secondary, and a tertiary datum plane for each part. The part will vary from these planes even though the variation may not be visible to naked eyes.

Figure 18-10 shows a cylindrical part resting on a flat surface of the primary plane and the center of the cylinder is aligned with the vertical datum axis formed by the intersection of other two planes.

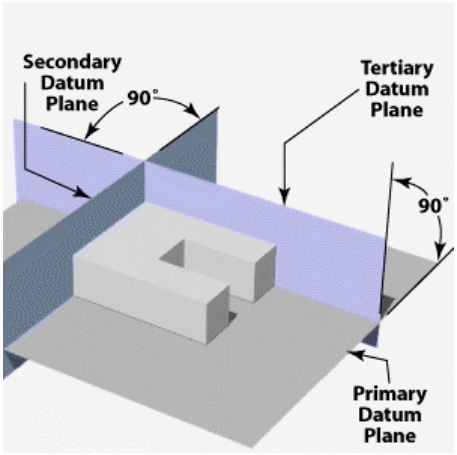

Figure 18-9 *The datum reference frame with a rectangular plate*

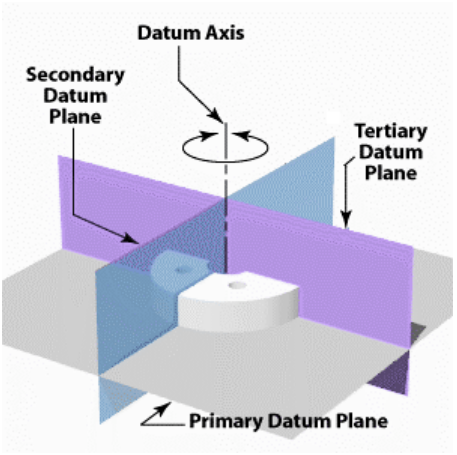

Figure 18-10 *The datum reference frame with a circular plate*

Material Condition Modifiers

Material condition modifiers tremendously impact the applied tolerance or datum reference. These modifiers can only be applied to features and datums that specify the size of the part. Examples of these features are holes, slots, pins, and tabs. If modifiers are applied to the features that are without size, they have no impact. However, if no modifier is specified in the feature control frame, the default modifier is regardless of feature size (RFS). The three types of material condition modifiers are explained next.

- **Maximum Material Condition (MMC)**
  This is a condition of a part feature where the part contains the maximum amount of material or the minimum hole-size and maximum shaft-size.

- **Least Material Condition (LMC)**
  This is the opposite of the MMC concept. This is a part feature which contains the least amount of material or the largest hole-size and smallest shaft-size.

- **Regardless of Feature Size (RFS)**
  When MMC or LMC is not specified with a geometric tolerance for a feature of size, no relationship is supposed to exist between the feature of size and the geometric tolerance. In other words, the tolerance applies regardless of feature size.

  In this case, the geometric tolerance controls the form, orientation, location of the axis, or median plane of the feature.

Feature Control Frame

The current method uses feature control frame to specify geometric tolerances. A feature control frame consists of a rectangular box divided into two or more compartments containing the geometric characteristic symbol followed by the tolerance value or description, modifiers, and any applicable datum feature references, as shown in Figure 18-11. If the tolerance zone is cylindrical, then a diameter symbol has to be added before the tolerance value followed by a material condition symbol. Other compartments are added when there is a requirement of composite tolerancing for a geometric feature.

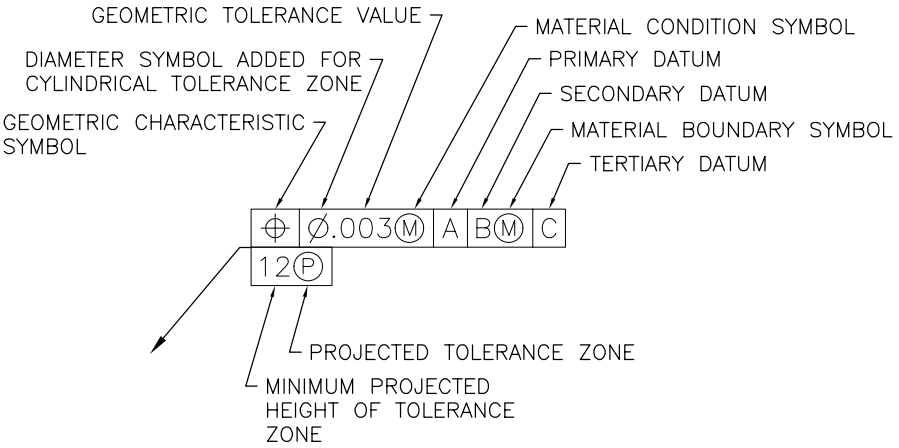

Figure 18-11 *The feature control frame*

Supplementary symbols, such as datum systems, datum targets, least and maximum material conditions, and projected tolerance zones are used in order to facilitate the precise interpretation of an engineering drawing. It is not always required to use geometric tolerances for every feature of a part.

Generally, if each feature meets all dimensional tolerances, form variations will be adequately controlled by the accuracy of the manufacturing process and the equipment used. A geometric tolerance is also used to state functional or interchangeability requirements of the manufactured part.

System of Geometric Tolerancing

The system of geometric tolerancing offers precise interpretation of drawing requirements. The geometric characteristics of a part that are controlled by using geometric tolerancing are represented by a symbol. The following table shows different characteristics and their symbols.

FEATURES	TYPES OF TOLERANCE	CHARACTERSTICS	SYMBOL
INDIVIDUAL FEATURES	FORM	STRAIGHTNESS	—
		FLATNESS	▱
		CIRCULARITY(ROUNDNESS)	○
		CYLINDRICITY	⌭
INDIVIDUAL OR RELATED FEATURES	PROFILE	PROFILE OF A LINE	⌒
		PROFILE OF A SURFACE	⌓
RELATED FEATURES	ORIENTATION	ANGULARITY	∠
		PERPENDICULARITY	⊥
		PARALLELISM	//
	LOCATION	POSITION	⌖
		CONCENTRICITY	◎
		SYMMETRY	⌯
	RUNOUT	CIRCULAR RUNOUT	↗*
		TOTAL RUNOUT	⌰*

ARROWHEADS MAY BE FILLED OR NOT

FORM TOLERANCES

Form tolerances are used to control the form characteristics of the manufactured part. These characteristics include straightness, flatness, circularity, and cylindricity. Form tolerances are applicable to single feature or elements of single feature and, as such, do not require locating dimensions. The form tolerance must be less than the size tolerance. Form and orientation tolerances critical for the function and interchangeability of parts are specified where the tolerances of size and location do not provide sufficient control. A tolerance of form may be specified where no tolerance of size is given, for example, controlling the flatness of parts after assembly.

Straightness

Straightness is a condition in which the elements of a surface or the axes of a surface are in a straight line. The geometric characteristic symbol used for indicating straightness is a horizontal line. A straightness tolerance refers to a tolerance zone within which the considered element of the surface or center line must lie. The straightness tolerance is applied to the view where the elements to be controlled are represented by a straight line.

The straightness tolerance is specified on a drawing by means of a feature control frame, which is directed by a leader to the line requiring control. In Figure 18-12(A), the symbol of

straightness states that the line shall be straight within .08 in. This means that the line shall be contained within a tolerance zone consisting of the area between two parallel straight lines in the same plane separated by the specified tolerance value refer to Figure 18-12(B). Theoretically, straightness of a line can be measured by keeping a straightedge in contact with the line and then determining the space between the straightedge and the line. If the space does not exceed the specified tolerance then the edge is considered straight.

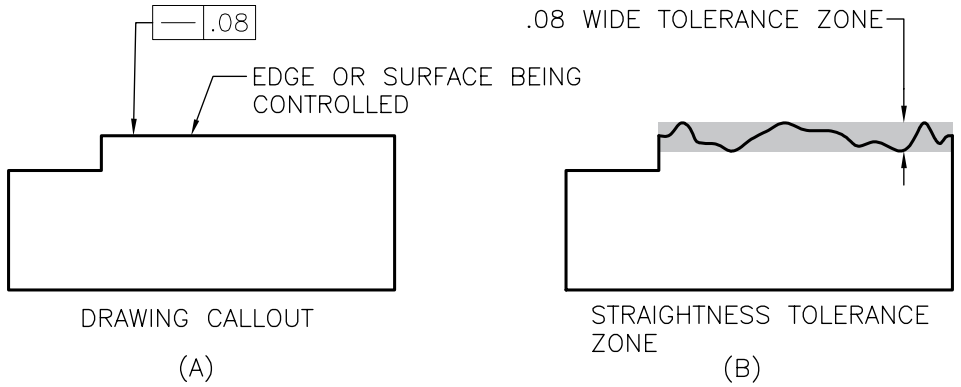

Figure 18-12 *Straightness tolerance applied to a flat surface*

For cylindrical parts or curved surfaces that are straight in one direction, the feature control frame should be directed to the side view where line elements appear as a straight line, as shown in Figure 18-13(A). Straightness of a cylindrical surface means that each line element of the surface shall be contained within a tolerance zone that consists of the space between two parallel lines, separated by the specified tolerance, when the part is rolled along one of the planes, refer to Figure 18-13(B). Theoretically, this could be measured by rolling the part on a flat plate and measuring the space between the part and the plate, refer to Figure 18-14.

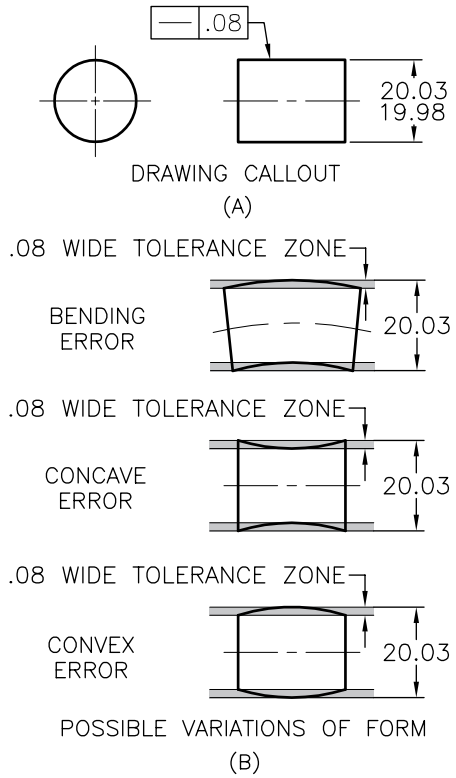

Figure 18-13 *Straightness tolerance applied to a cylindrical feature*

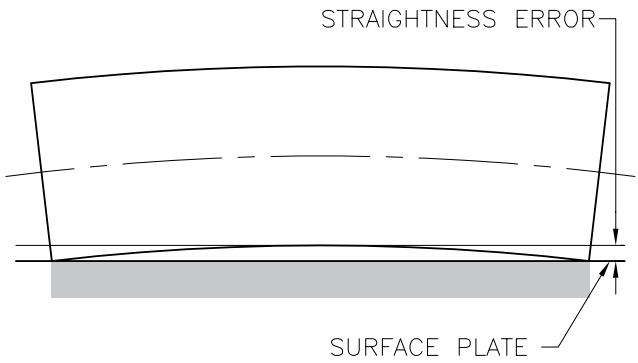

Figure 18-14 *Measuring the straightness of a cylindrical surface*

The straightness tolerance applied to surface controls surface elements only. Therefore, it will only control the bending or a wavy condition of the surface, but it will not necessarily control the straightness of the axis or the conicity of the cylinder.

The straightness tolerance can be applied to a conical surface in the same manner as for a cylindrical surface, refer to Figure 18-15. In this way it will ensure that the rate of taper is

uniform. For controlling the actual rate of taper, or the taper angle, the tolerance must be applied separately.

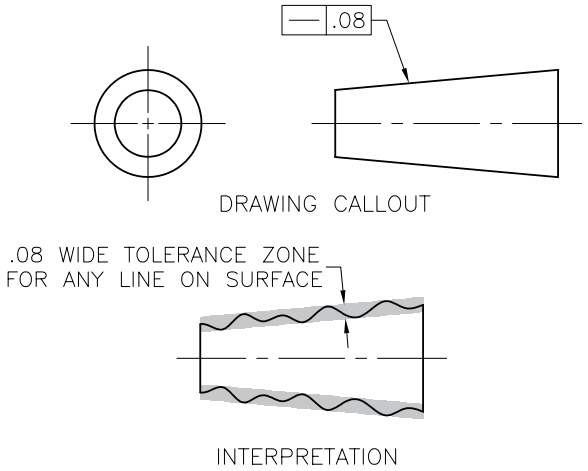

Figure 18-15 *Straightness tolerance applied for conical feature*

The straightness tolerance applied to a flat surface indicates the controlling of straightness is in one direction only. Therefore, in this case, it must be directed to the line on the drawing which represents the surface to be controlled and the direction in which control is required, refer to Figure 18-16(A). It is then interpreted to mean that each line element on the surface in the indicated direction shall lie within the specified tolerance zone, refer to Figure 18-16(C).

Different straightness tolerances may be specified in two or more directions when required. However, if the same straightness tolerance is required in two coordinate directions on the same surface, a flatness tolerance is used instead of a straightness tolerance. It is not necessary to indicate the tolerances in all three views. The straightness tolerances may be shown on a single view by indicating the direction with short lines terminated by arrowheads, as shown in Figure 18-16(B).

Straightness may be applied on unit basis for limiting unexpected surface variation within a relatively short length of the feature. When using a unit control on a feature of size, a maximum limit is typically specified to restrict the relatively large theoretical variations. If straightness for the total length is not specified then the straightness per unit length given is used alone.

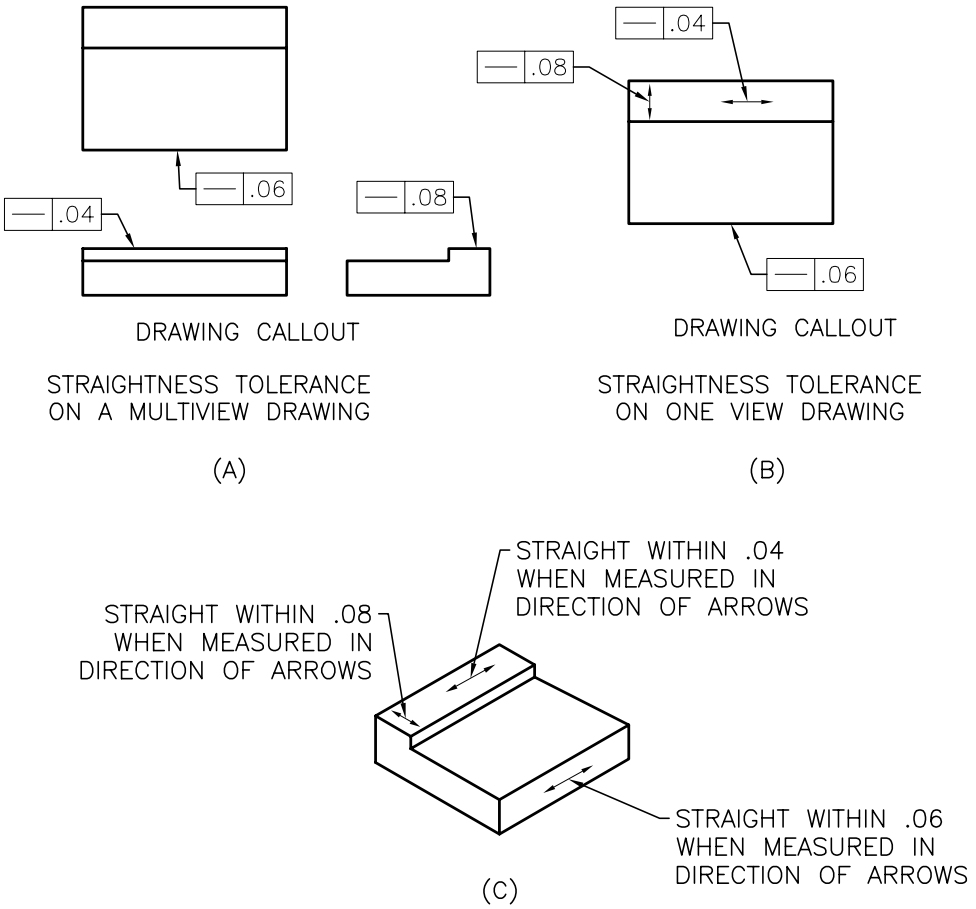

Figure 18-16 *Straightness tolerance in muiple directions*

Flatness

Flatness of a surface is a condition in which all surface elements lie in one plane. A flatness tolerance specifies a tolerance zone defined by two parallel planes within which all points on the surface must lie. These two parallel planes must lie within the limits of the size. These planes may be oriented in any manner to contain the surface but it is not necessary that they should be parallel to the base. The symbol for flatness is a parallelogram with angles of 60°.

When a flatness tolerance is specified on a surface, the feature control frame is attached to a leader and is directed to the surface or to an extension line of the surface. It is placed in a view where the surface elements to be controlled are represented by a line, refer to Figure 18-17.

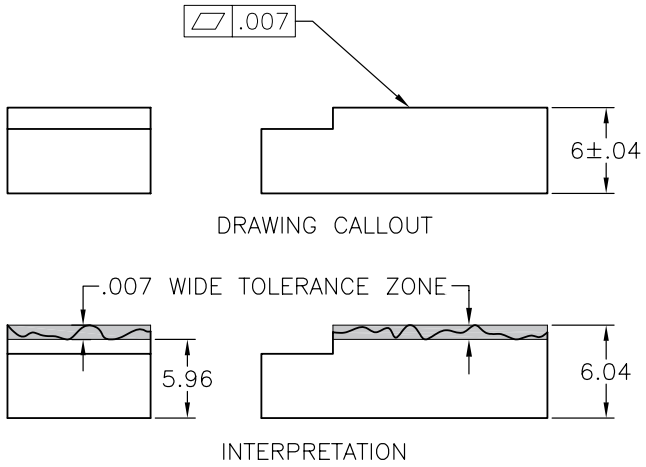

Figure 18-17 *Flatness tolerance applied to a surface*

If a surface is associated with a size tolerance then the flatness tolerance must be less than the size tolerance and it should be contained within the limits of the specified size. When flatness tolerances are applied to opposite surfaces of a part and the size tolerances are also shown, as shown in Figure 18-18, the flatness tolerance must be less than the size tolerance and lie within the limits of size.

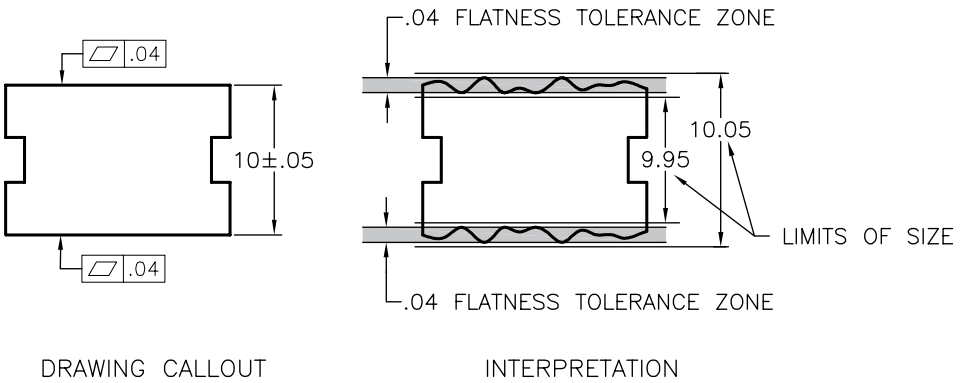

Figure 18-18 *Flatness tolerance within limits of size*

For limiting any unexpected surface variation within a relatively small area of the feature, flatness may be applied on unit basis. The unit variation is used either in combination with a specified total variation, or alone. It is expected to specify the maximum limit to restrict the relatively large theoretical variations. Since flatness involves surface area, the value of the tolerance is specified to the left of the area separated by a slash, refer to Figure 18-19.

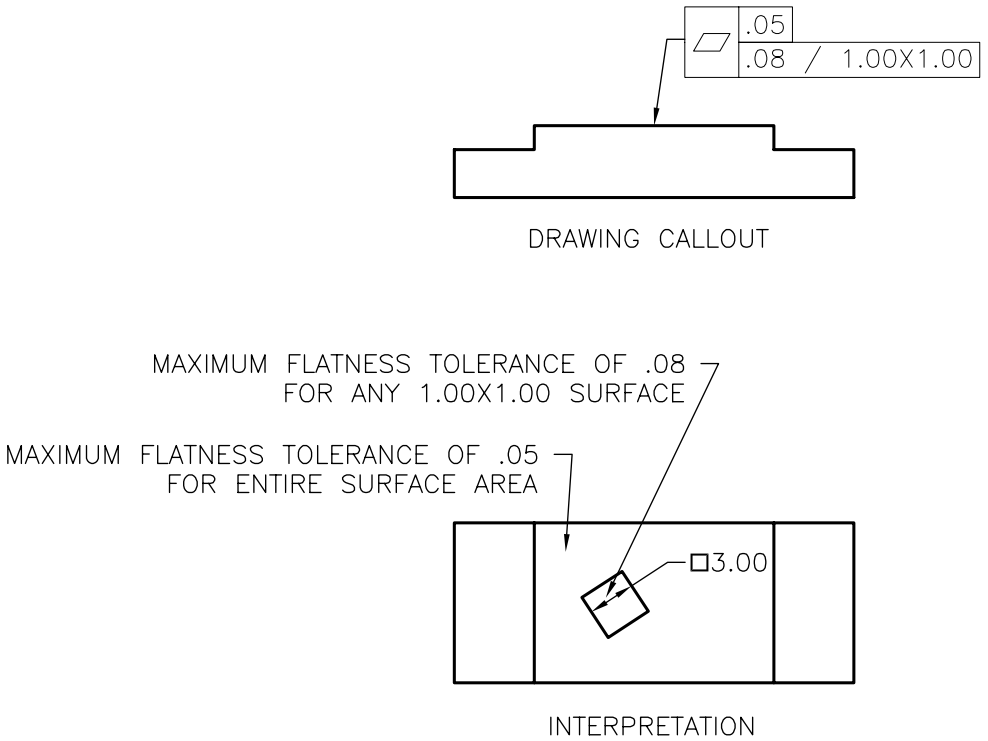

Figure 18-19 *Overall flatness tolerance combined with a flatness of unit area*

Circularity (Roundness)

Circularity is a condition on a surface of revolution (cylinder, cone, sphere) where all points of the surface are intersected by any plane perpendicular to a common axis (cylinder, cone) or a plane passing through a common center (sphere) are equidistant from that axis or center. Circularity is similar to straightness with the only difference that in circularity the line representing straightness is wrapped around a circular cross-section.

Common type of circularity errors of a circular line on the periphery of a cross-section of a circular feature may occur in the form of ovality, lobing or as random irregularities. Possible deviations from a true circle are shown in Figure 18-20.

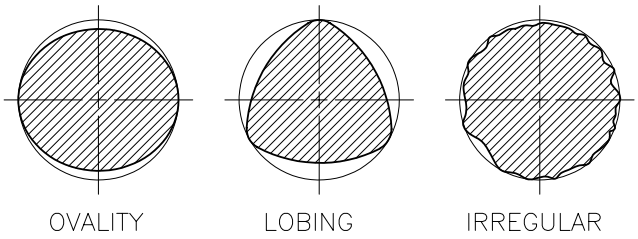

Figure 18-20 *Common types of circularity errors*

The symbol used for circularity is a circle. The circularity tolerance is specified by using this symbol in the feature control frame, as shown in Figure 18-21. A circularity tolerance specifies a tolerance zone bounded by two concentric circles within which each circular element of the surface must lie, refer to Figure 18-21.

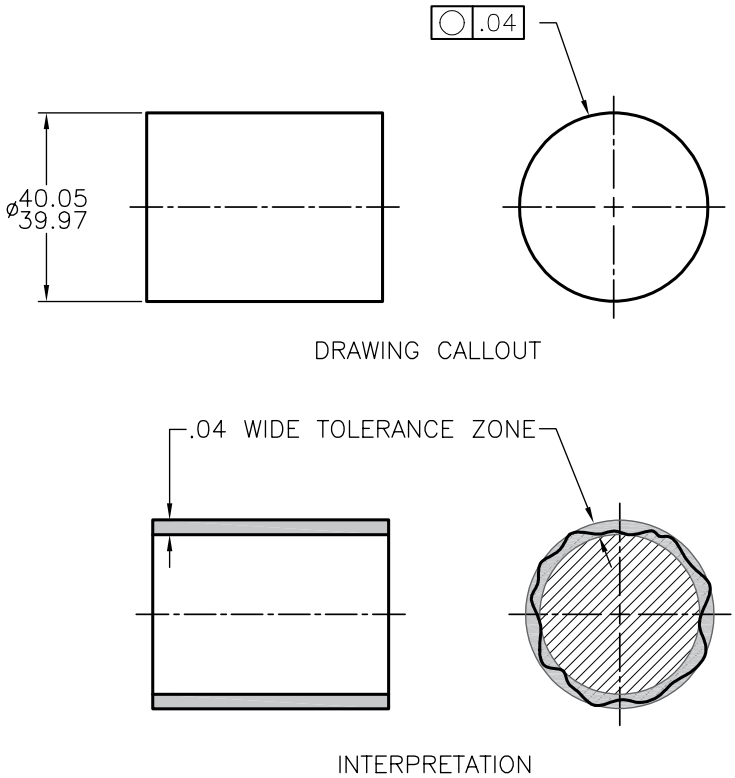

Figure 18-21 *Circularity tolerance applied to a cylindrical feature*

Circularity of non-cylindrical parts refers to conical parts and other features that are circular in cross-section but have variable diameters. Because many sizes of circles may be involved in the end view, it is usually good practice to apply the circularity tolerance to the side views, as shown in Figure 18-22.

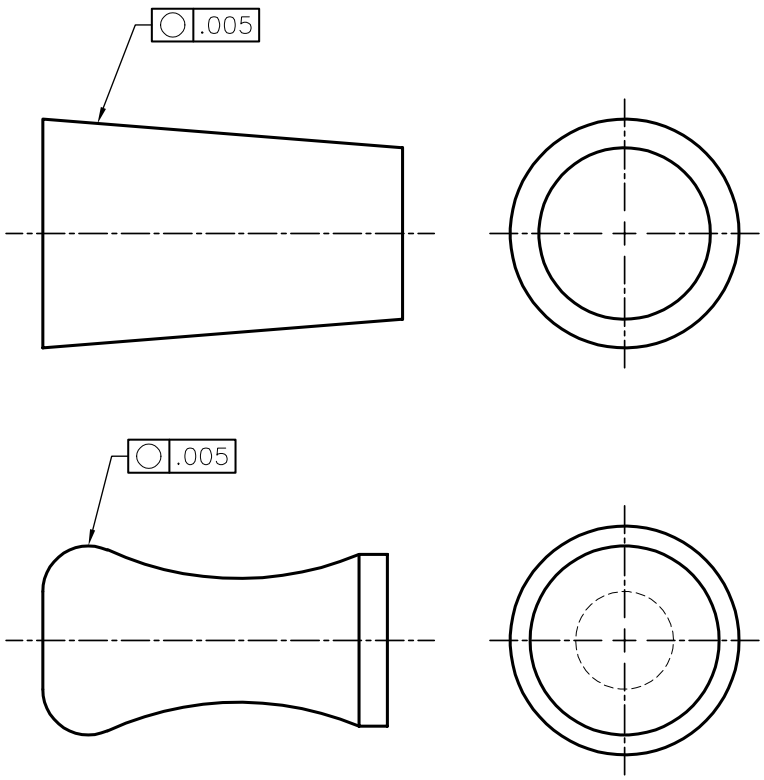

Figure 18-22 *Circularity tolerance applied to non cylindrical feature*

As circularity is a form of tolerance, it is not related to datums and may be specified by using the circularity symbol in the feature control frame. Circularity is expressed on an RFS basis. The absence of a modifying symbol in the feature control frame means that RFS applies to the circularity tolerance. A circularity tolerance cannot be modified on an MMC basis because it controls surface elements only. The circularity tolerance must be less than half the size tolerance because it must lie in a space equal to half the size tolerance.

Cylindricity

Cylindricity is a condition of a surface in which all points on the surface are at same distance from a common axis. It is like a flatness tolerance wrapped around a cylinder. The cylindricity tolerance is a composite control of form that includes circularity, straightness, and parallelism of the surface element of a cylindrical feature.

The geometric characteristic symbol for cylindricity consists of a circle with two tangent lines at 60°. A cylindricity tolerance that is measured radially specifies a tolerance zone bounded by two concentric cylinders within which the surface must lie. So the cylindricity tolerance must be within the specified limits of size. In an engineering drawing, cylindricity tolerance can be simultaneously applied for end view or side view, as shown in Figure 18-23.

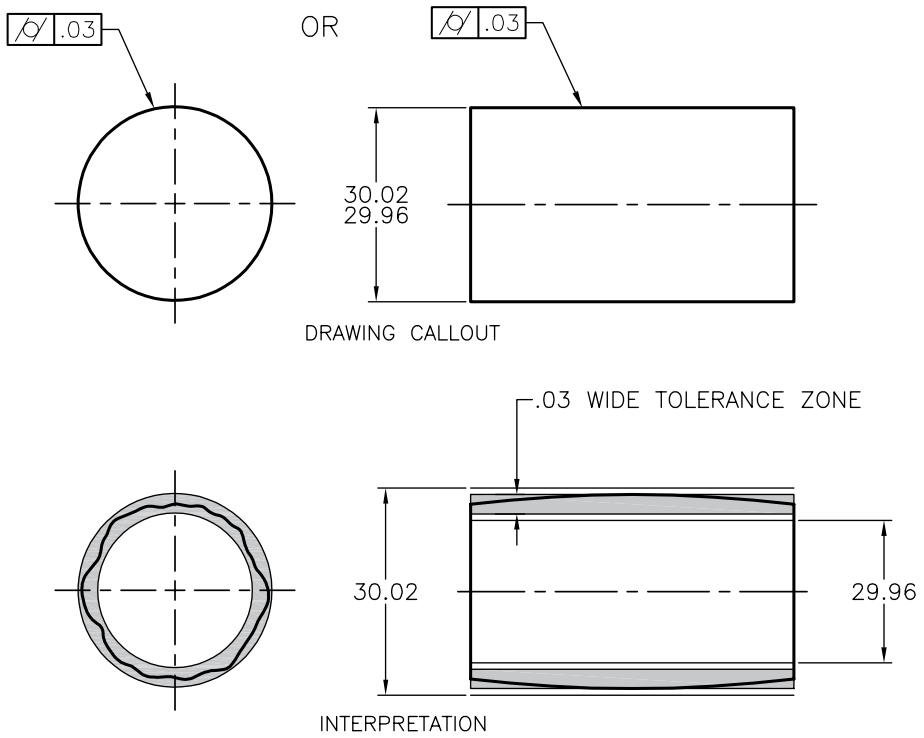

Figure 18-23 *Cylindricity tolerance applied to a cylindrical feature*

The cylindricity tolerance must be less than half of the size tolerance. Since each part is measured for form deviation, it is obvious that the total range of the specified cylindricity tolerance will not always be available. The cylindricity tolerance zone is controlled by the measured size of the actual part. The part size is first determined then the cylindricity tolerance is added as a refinement to the actual size of the part. Figure 18-24 shows some permissible form errors for the part shown in Figure 18-23.

Cylindricity tolerances can be applied only to cylindrical surfaces, such as round holes and shafts. No specific geometric tolerances have been devised for other circular forms which require the use of several geometric tolerances. A conical surface, for example, must be controlled by a combination of tolerances for circularity, straightness, and angularity. Since cylindricity is a form tolerance much like the flatness tolerance, it controls surface elements only and cannot be modified on MMC basis. The absence of a modifying symbol in the feature control frame indicates that RFS applies.

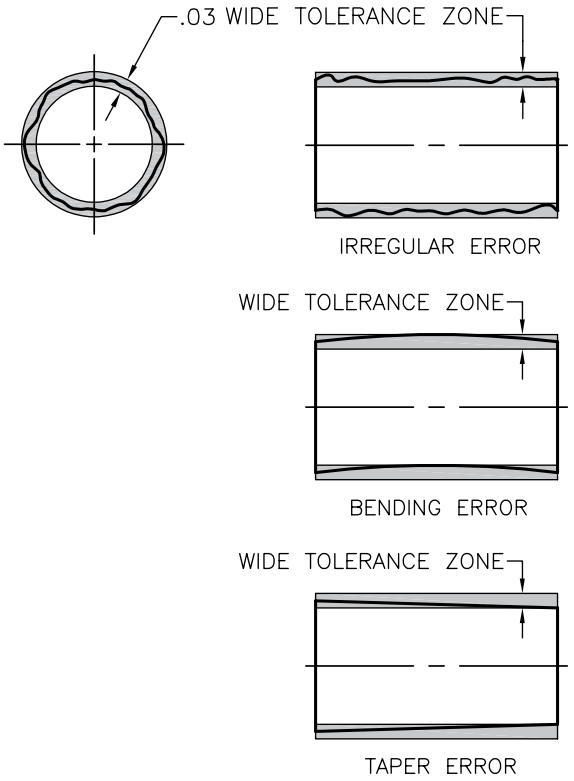

Figure 18-24 *Possible errors in a cylindrical feature*

PROFILE TOLERANCES

A profile is the outline form or shape of a line or surface. A line profile represents the edge of a part or it may refer to line elements of a surface in a single direction, such as the outline of cross-sections through the part. A surface profile represents the form or shape of a complete surface in three dimensions.

Profile tolerances are used to control the position of lines and surfaces that are neither flat nor cylindrical. The elements of a line profile may be straight lines, arcs, or other curved lines. The elements of a surface profile may be flat surfaces, spherical surfaces, cylindrical surfaces, or surfaces composed of various line profiles in two or more directions. A profile tolerance specifies a uniform boundary along the true profile within which the elements of the surface must lie. MMC is not applicable to profile tolerances. Where used as a refinement of size, the profile tolerance must be contained within the limits of size.

There are two geometric characteristics symbols for profiles. One is for line and one for surfaces. Separate symbols are needed because it is often necessary to differentiate between line elements of a surface and the complete surface itself. The symbol for the profile-of-a-line consists of a semicircle with a diameter equal to twice the size of the letters used in the whole drawing. The symbol for profile-of-a-surface is identical to profile-of-a-line except that the semicircle is closed by a straight line at the bottom, refer to Figure 18-25.

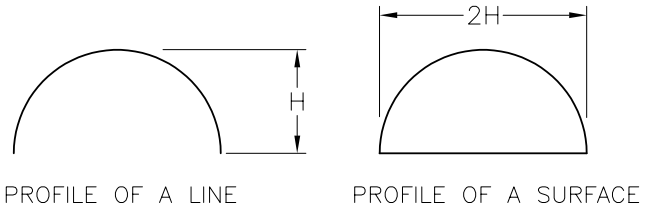

Figure 18-25 *Symbols used for profile*

Profile-of-a-line Tolerance

The profile-of-a-line tolerance may be directed to a line of any length or shape. Datums will not be used when only requirement is the profile shape taken cross-section by cross-section. Profile-of-a-line tolerancing is used where it is not desirable to control the entire surface of the feature as a single entity. The profile-of-a-line tolerance is specified in the usual manner by including the symbol and tolerance in a feature control frame directed to the line that is to be controlled, refer to Figure 18-26. The tolerance zone established by the profile-of-a-line tolerance is two dimensional, extending along the length of the considered feature. If the line on the drawing to which the tolerance is directed represents a surface, the tolerance applies to all line elements of the surface parallel to the plane of the view on the drawing, unless otherwise specified. The tolerance indicates a tolerance zone consisting of the area between two parallel lines, separated by the specified tolerance which are themselves parallel to the basic form of the line being toleranced.

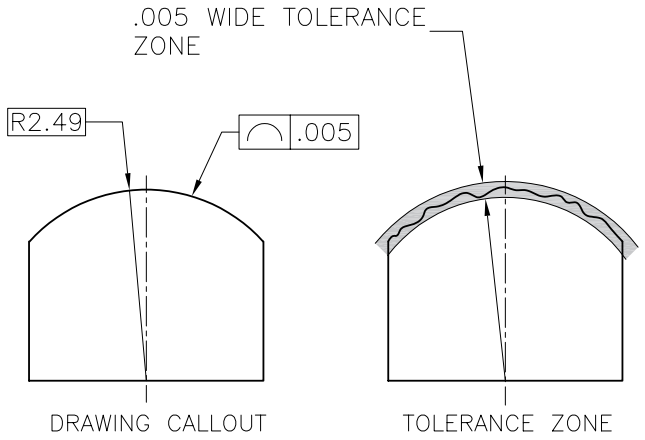

Figure 18-26 *Profile-of-a-line tolerance*

Profile-of-a-surface Tolerance

If a profile of line tolerance is applied to the whole surface then it is known as profile-of-a-surface tolerance. The tolerance zone established by the profile-of-a-surface tolerance is three dimensional, extending along the length and width or circumference of the considered feature or features. The profile-of-a-surface tolerance indicates a tolerance zone having the same form as the basic surface with a uniform width equal to the specified tolerance within which the entire surface must lie, refer to Figure 18-27.

NOTE:
UNTOLERANCED DIMENSIONS ARE BASIC

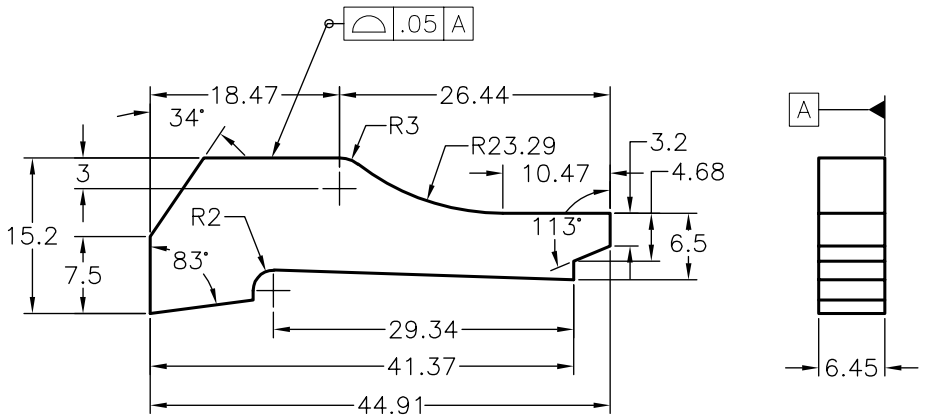

Figure 18-27 *Specifying the profile-of-a-surface tolerance*

Different profile tolerances may be applied on segments of a profile according to the requirement as shown in Figure 18-28. Profile-of-a-surface tolerance is used to control form or combinations of size, form, and orientation. If it is used for the refinement of size, the profile tolerance must be contained within the size limits. Profile-of-a-surface tolerance may be applied to parts of any shape including parts having a constant cross-section, parts having a surface of revolution, or parts having a profile tolerance applied all over. Although the profile tolerance may be directed to the surface in either view, it is usually directed to the view showing the shape of the profile.

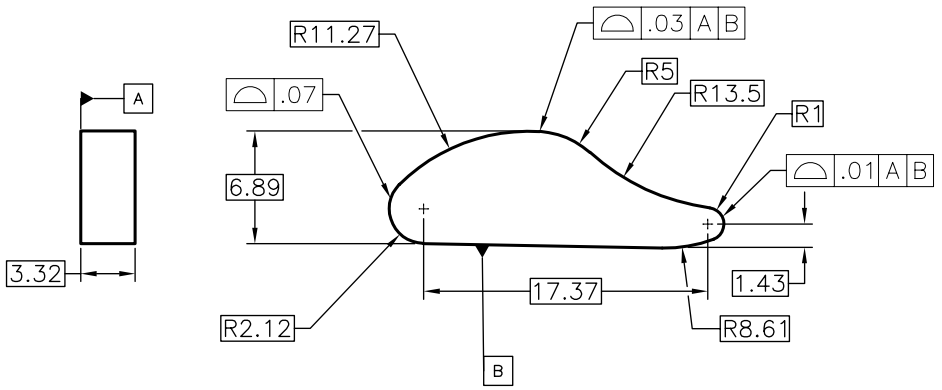

Figure 18-28 *Specifying different profile tolerances on a segment of a profile*

The basic rules for profile-of-a-line tolerancing apply to profile-of-a-surface tolerancing as well. However, in most cases, the profile-of-a-surface tolerance requires reference of datums in order to provide proper orientation of the profile. This is specified by indicating suitable datum with the feature. The criterion that distinguishes whether a profile tolerance is being applied to position or to orientation is whether the profile is related to the datum by a basic dimension or by a toleranced dimension.

Profile tolerancing may be used to control the form and orientation of plane surfaces. Profile-of-a-surface tolerance is used to control a plane surface inclined to a datum feature, as shown in Figure 18-29.

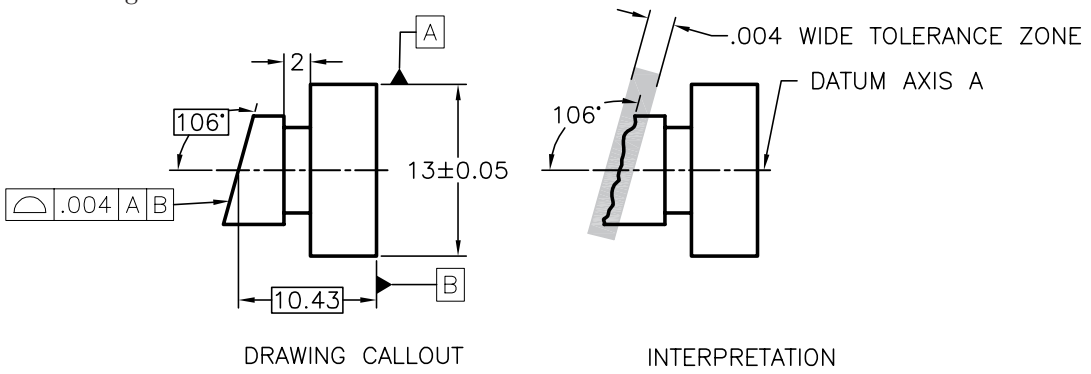

Figure 18-29 *Profile-of-a-surface tolerance zone*

ORIENTATION TOLERANCES

Orientation refers to the angular relationship that exists between two or more lines, surfaces, or other features. An orientation tolerance controls parallel, perpendicular, and all other angular relationships. As orientation refers to a certain degree, the limits of size controls the form and parallelism, and the tolerances of location controls the orientation. The extent of this control should be considered before specifying the form or orientation tolerances. The general geometric characteristic for orientation is termed as angularity. This term may be used to describe angular relationships of any angle between straight lines or surfaces with straight line elements, such as flat or cylindrical surfaces. For two specific type of angularity, special terms are used. They are perpendicularity and parallelism. Perpendicularity (squareness) is used for features that are related to each other by a 90° angle, and parallelism for features related to one another by an angle of zero.

A tolerance of form or orientation may be specified where the tolerances of size and location do not provide sufficient control. Note that an orientation tolerance, when applied to a planar surface, controls flatness to the extent of the orientation tolerance. When the flatness control in the orientation tolerance is not sufficient, a separate flatness tolerance should be considered. An orientation tolerance does not control the location of features.

The three geometric symbols for orientation tolerances are shown in Figure 18-30. The proportions for the symbols are based on the height of the letters used in the drawing.

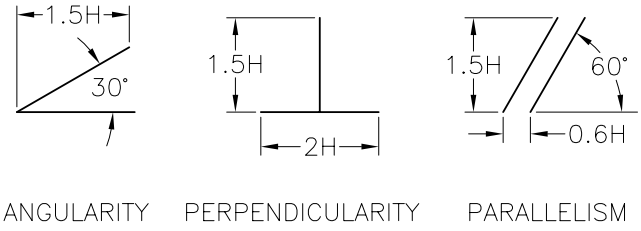

Figure 18-30 *Symbols used for Orientation tolerances*

Angularity Tolerance

Angularity refers to the angular relation of a surface or axis (at an angle other than 0° and 90°) with respect to a datum plane or datum axis. The angularity tolerance is a three-dimensional quantity and the shape of the tolerance zone depends on the shape of the feature. If applied to a flat surface, the tolerance zone is specified by two imaginary planes, parallel to the ideal angle and spaced apart at the prescribed distance, refer to Figure 18-31. If angularity is applied to a hole, it references to an imaginary cylinder around the ideal angle but the center axis of the hole must stay within that imaginary cylinder, refer to Figure 18-32.

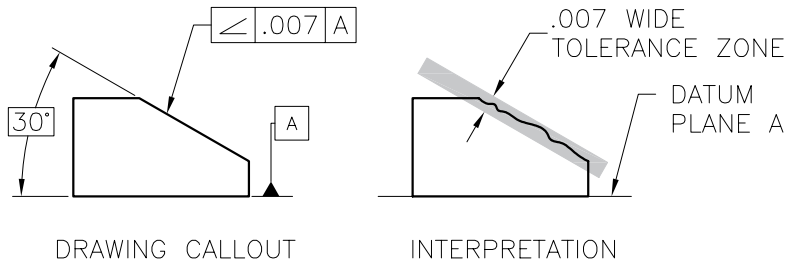

Figure 18-31 *Angularity tolerance applied to a surface*

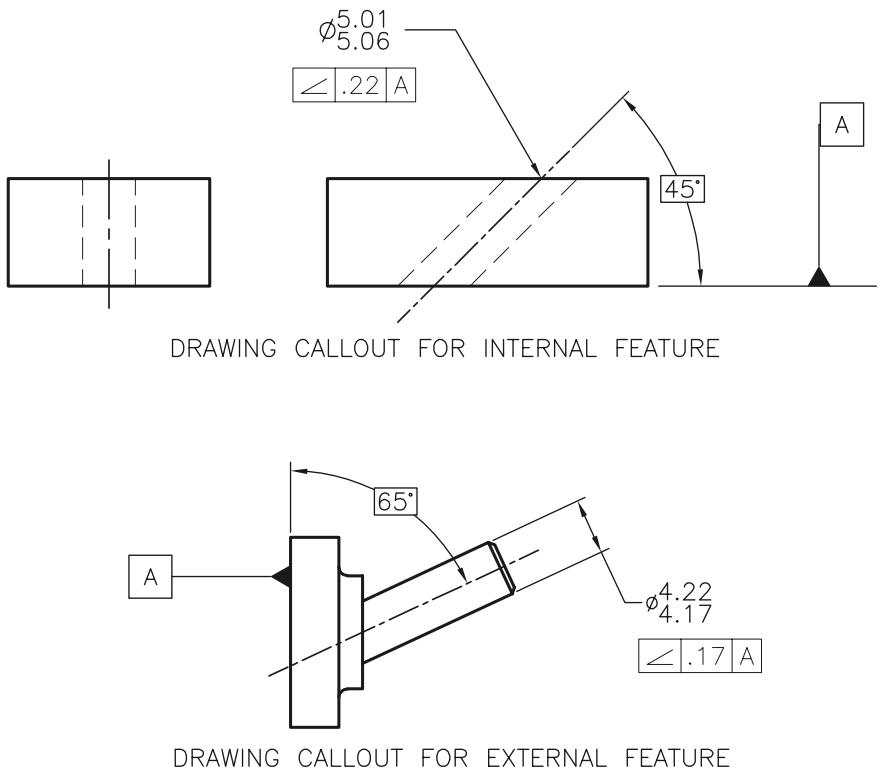

Figure 18-32 *Angularity tolerance applied to cylindrical features*

For geometric tolerancing of angularity, the angle between the datum and the controlled features should be stated as a basic angle. Therefore, it should be enclosed in a rectangular frame (basic dimension symbol) to indicate that the general tolerance note does not apply, refer to Figures 18-31 and 18-32. However, for perpendicularity (90°) or parallelism (0°) the angle need not be stated.

Perpendicularity Tolerance

Perpendicularity is the condition where a surface subtends 90° angle to a datum plane or axis. The perpendicularity tolerance for a feature specifies a tolerance zone defined by two parallel planes perpendicular to a datum plane or axis. The surface or axis of the considered feature must lie within this specified zone.

The perpendicularity tolerance specifies one of the following tolerance zones:

1. A cylindrical tolerance zone perpendicular to a datum plane or axis within which the center line of the considered feature must lie, refer to Figure 18-33.

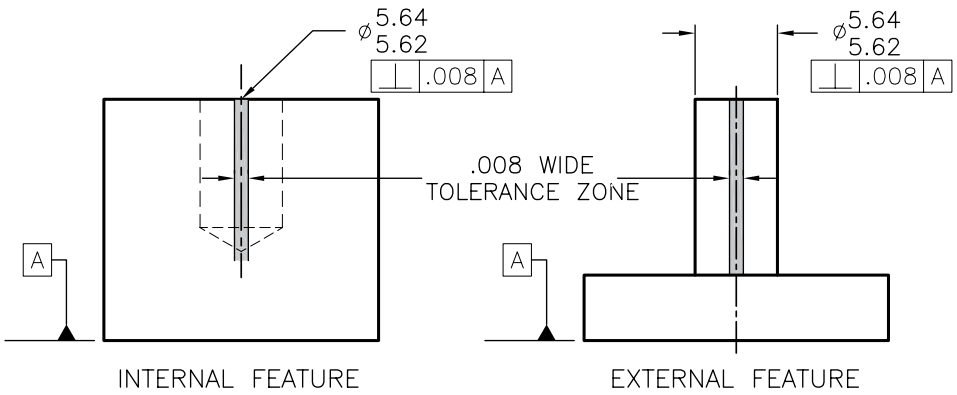

Figure 18-33 *Perpendicularity tolerance zone in cylindrical features*

2. A tolerance zone defined by two parallel planes perpendicular to a datum axis or plane within which the surface of the considered feature must lie, refer to Figure 18-34.

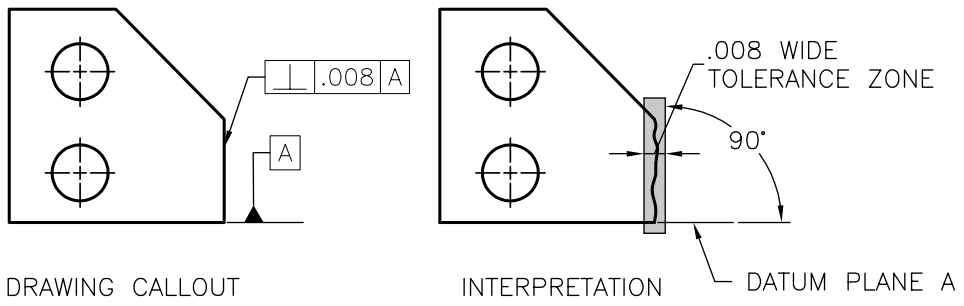

Figure 18-34 *Perpendicularity tolerance applied to flat surface*

Parallelism Tolerance

Parallelism refers to condition where a feature that is parallel to the reference datum plane. Parallelism can also be stated as the condition of a surface equidistant at all points from a datum plane. The parallelism tolerance for a flat surface or a cylindrical feature specifies a tolerance zone defined by two planes or lines parallel to a datum plane or axis. For a flat surface, line elements of the surface must lie within the specified tolerance zone, refer to Figure 18-35. For a cylindrical feature, the axis of the feature must lie within the specified cylindrical tolerance zone, refer to Figure 18-36.

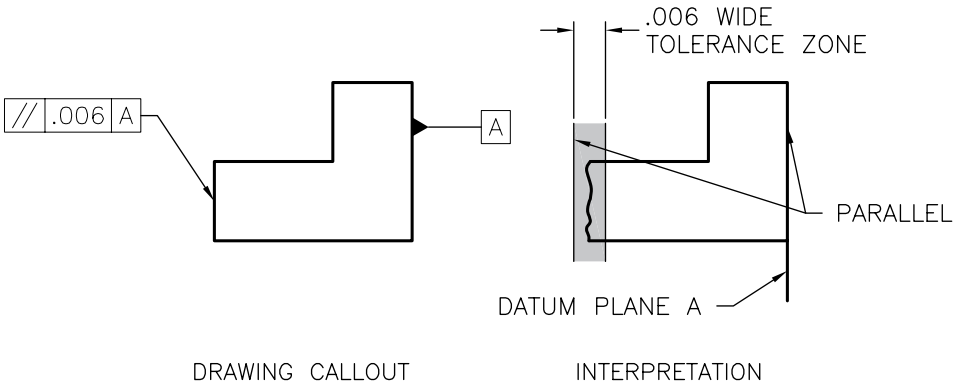

Figure 18-35 *Parallelism tolerance applied to flat surfaces*

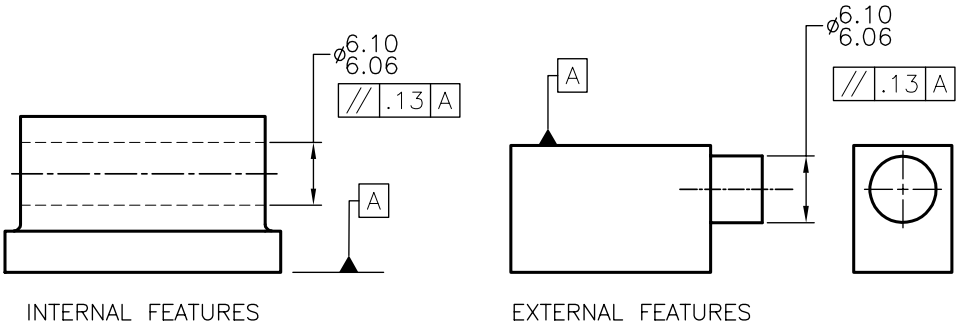

Figure 18-36 *Parallelism tolerance applied to cylindrical features*



Note

Flatness and parallelism are sometimes confused with each other. However, flatness is not related to another datum and it looks at the feature independently. Parallelism relates the inspected feature to another datum plane. Whenever an orientation tolerance is applied to a flat surface, it indirectly defines the flatness of the feature.

LOCATION TOLERANCES

Location tolerances include position, concentricity, and symmetry tolerances. Position tolerance is used to control coaxiality of features, the center distance between features, and the location of features as a group. Concentricity and symmetry tolerances are used to control the center distance of feature elements. The geometric characteristics symbols for the location tolerances are in the proportion of the text height used in the drawing, as shown in Figure 18-37.

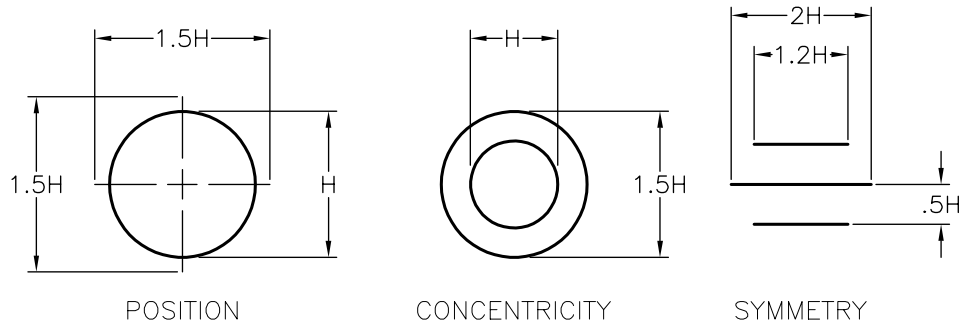

Figure 18-37 *Geometric characteristics symbols for location tolerances*

Position Tolerance

Position is the location of one or more features of size relative to one another or to one or more datum references. The position tolerance is likely one of the most common of the location tolerances and probably used more than any other geometric tolerance. The ideal or exact location of the feature is called the true position. The actual location of the feature is compared to the true position and involves one or more datums to determine the true position. The exact location of a feature is defined by basic dimensions which is shown in a rectangular box and is established with reference to datum planes or axes, as shown in Figure 18-38.

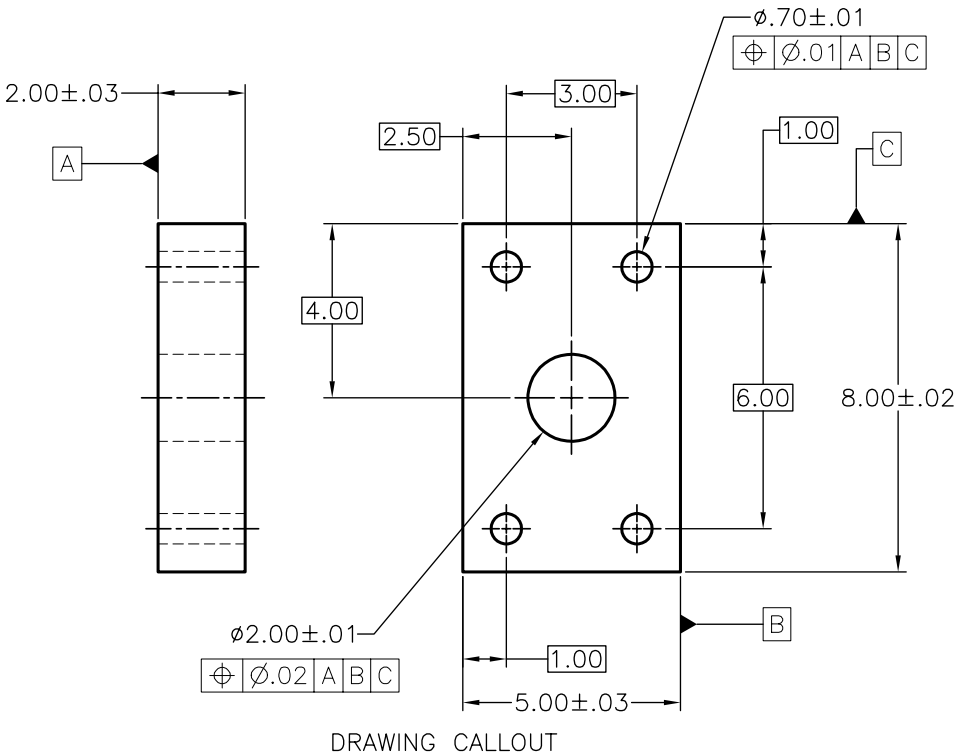

Figure 18-38 *Position tolerance applied on hole features*

A position tolerance locates center points, axes and median planes of the features. It has nothing to do with the size, shape, or angle of a feature. The position tolerance involves the location of center axis of the hole and the axis of the hole must be within the imaginary cylinder around the intended true position of the hole, as shown in Figure 18-39. If the toleranced feature is rectangular, the tolerance zone will be defined by two imaginary planes at a specified distance from the ideal true position.

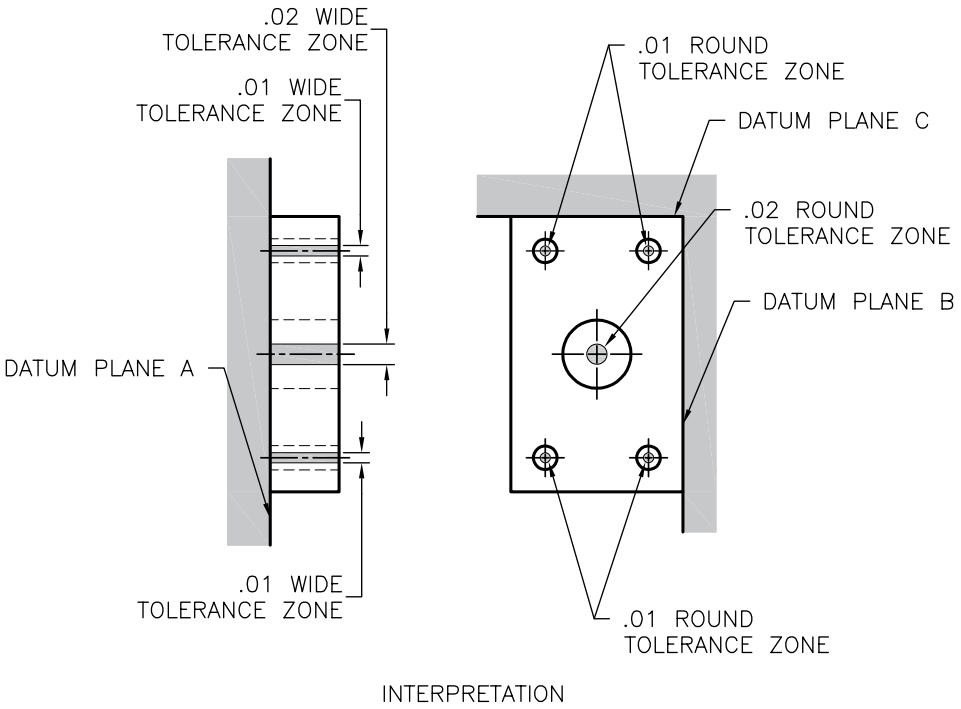

Figure 18-39 *Interpretation of true position*

Concentricity Tolerance

Concentricity is a condition where the median points of all diametrically opposed elements of a surface of revolution (or the median points of corresponding elements of two or more radially disposed features) are congruent with a datum axis or center point, refer to Figure 18-40. This tolerance is not used very often because median points are difficult to establish due to irregularities of form. The only reason to use this tolerance is to control the error of balance that can exist if the mass center is not close to the axis of rotation or center plane.

The concentricity tolerance is a cylindrical (or spherical) tolerance zone whose axis (or center point) coincides with the axis (or center point) of the datum feature(s), refer to Figure 18-40. Concentricity is measured using the median points of multiple diameters within the cylindrical tolerance zone. The median points of all corresponding elements of the feature(s) being controlled, regardless of the feature size, must lie within the cylindrical (or spherical) tolerance zone.

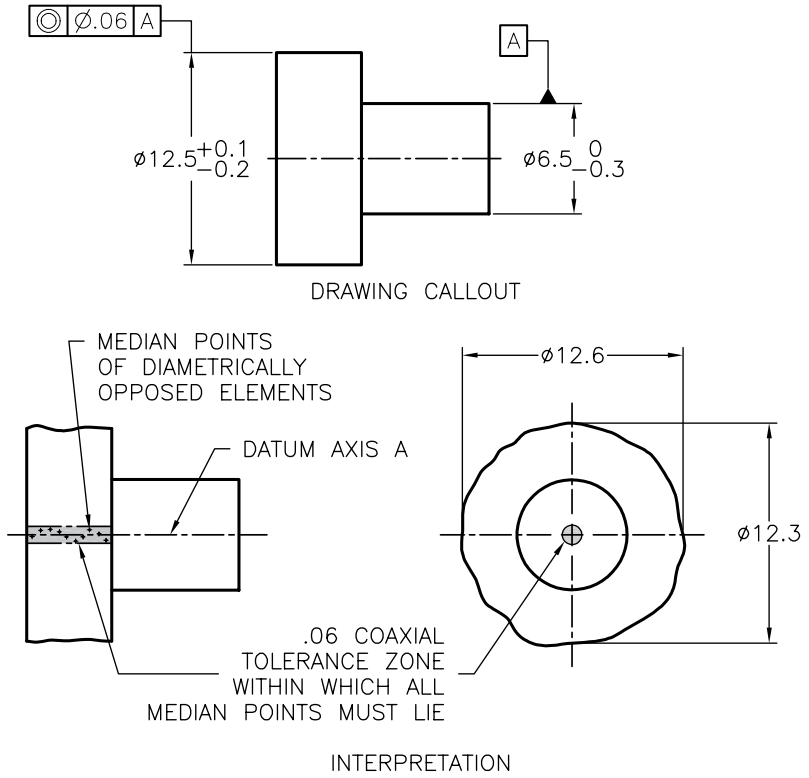

Figure 18-40 *Concentricity tolerance applied to a cylindrical feature*

Symmetrical Tolerance

Symmetry is a condition where the median points of all opposite or corresponding elements of two or more features (surfaces) are congruent with a datum axis or center plane, as shown in Figure 18-41.

Symmetry is much like concentricity except that it controls rectangular features and involves reference of two datum planes. Both of these control the median points of a feature of size. Concentricity is applied to circular features whereas symmetry is applied to non circular features. The tolerance zone is equally disposed about the datum plane. The median points of the toleranced feature, regardless of its feature size must lie within the tolerance zone which is defined by two parallel planes for symmetry, refer to Figure 18-41.



Note

Both symmetry and concentricity tolerances are difficult to measure and increase the cost of inspection. However, when a certain characteristic like balancing of a part is a primary concern, these tolerances are very effective.

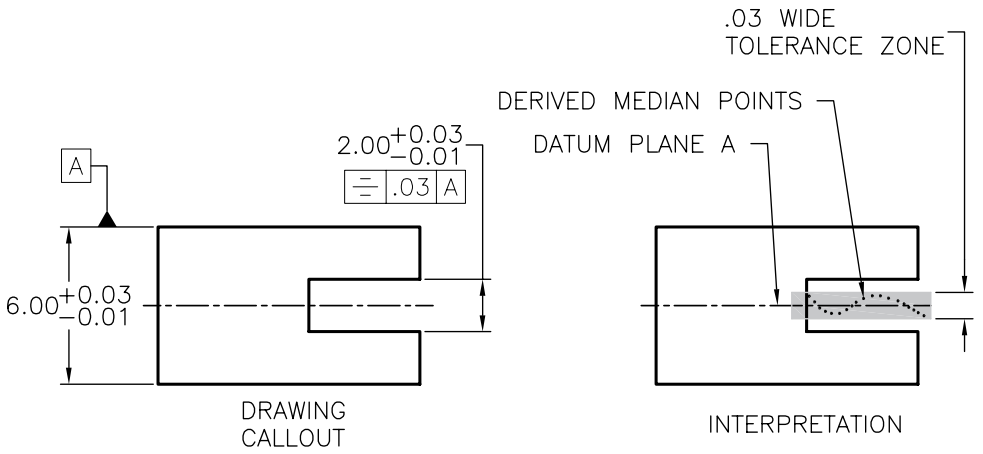

Figure 18-41 *Symmetry tolerance applied to a rectangular feature*

RUNOUT TOLERANCES

Runout tolerances are three-dimensional in nature and are only applied to cylindrical parts that rotate about an axis. Runout tolerances are used to control the relationship of a feature relative to a datum axis which is established between two diameters that are axially separated. Runout tolerances are composite tolerances used to control the relationship of one or more cylindrical features during a full 360^0 rotation about the datum axis.

There are two types of runout tolerances used in the drawings: circular runout and total runout. Both circular and total runout reference a cylindrical feature to a center datum-axis and simultaneously control the location, form, and orientation of the feature. The type of runout tolerance used depends on design requirements and manufacturing considerations. Geometric characteristics symbols used for runout tolerancing are shown in Figure 18-42.

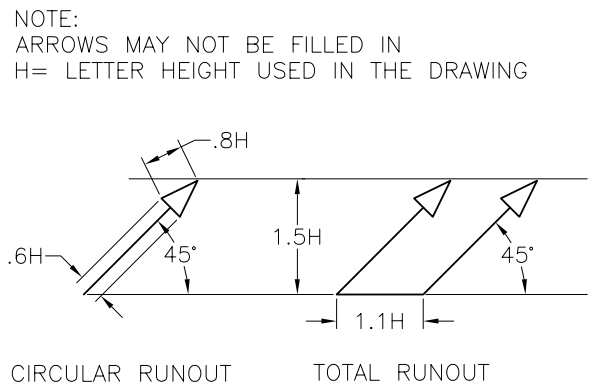

Figure 18-42 *Geometric characteristics symbols for runout tolerances*

Circular Runout

Circular runout provides control of circular elements of a surface. The tolerance is applied independently at any cross-section as the part is rotated 360°. If applied to surfaces that are constructed around a datum axis, circular runout controls variations such as circularity and coaxiality. When applied to surfaces constructed at right angles to the datum axis, circular runout controls wobble at all diametral positions.

For inspecting the circular runout, the part must be rotated about the datum axis. A calibrated instrument is placed against the surface of the rotating part to detect the highest and lowest points. The surface must remain within two imaginary circles having their centers located at the center axis, as shown in Figure 18-43.

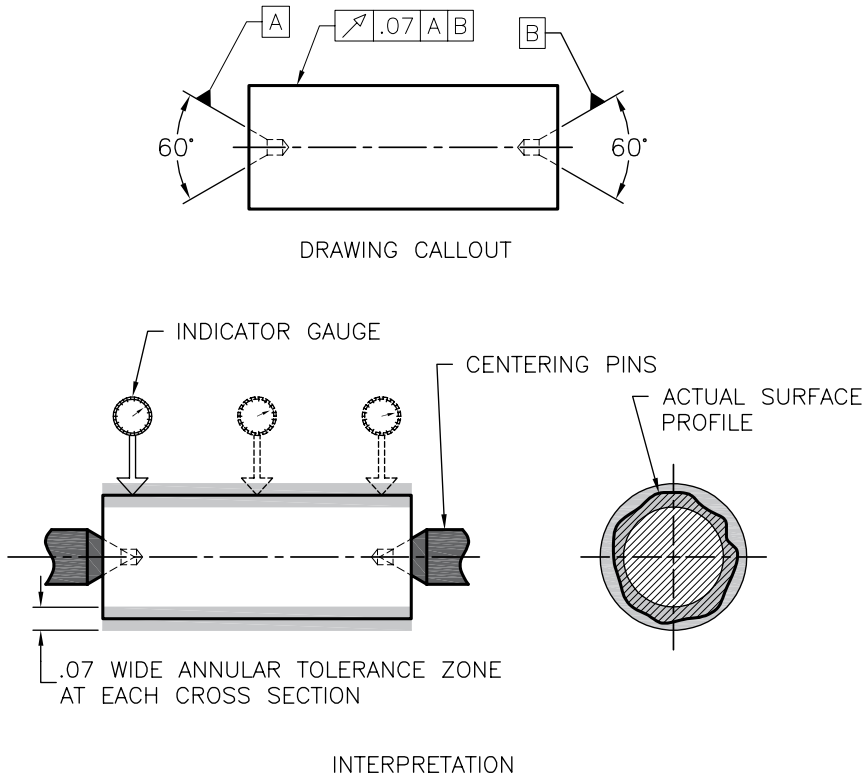

Figure 18-43 *Circular runout for cylindrical feature*

Figure 18-43 shows a surface measured at several points indicated by three different positions of the indicator gauge. At each position, the indicator movement during one revolution of the part must not exceed the specified tolerance. For a cylindrical feature, runout error is caused by eccentricity and errors of roundness. It is not affected by taper (conicity) or errors of straightness of the straight line elements such as barrel shaping.

A part where tolerance is applied to a surface at right angle to the datum axis is shown in Figure 18-44(A). In this case, an error generally termed as wobble will be shown when the surface is flat but not perpendicular to the axis, refer to Figure 18-44(B). Error will be shown if the surface is convex or concave or perfect, as shown in Figure 18-44(C). Circular runout can also

be applied to curved surfaces. Unless otherwise specified, measurement is always done normal to the surface.

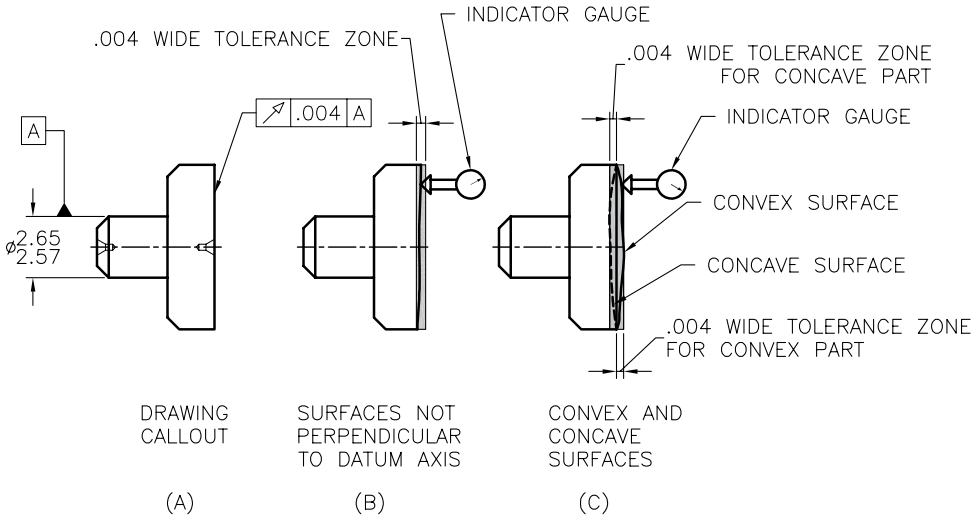

Figure 18-44 *Circular runout for flat surfaces perpendicular to datum axis feature*

If a runout tolerance is applied to a specific portion of a surface, a thick chain line is also drawn adjacent to the surface profile to show the desired length. Basic dimensions are used to define the extent of the portion as indicated in Figure 18-45.

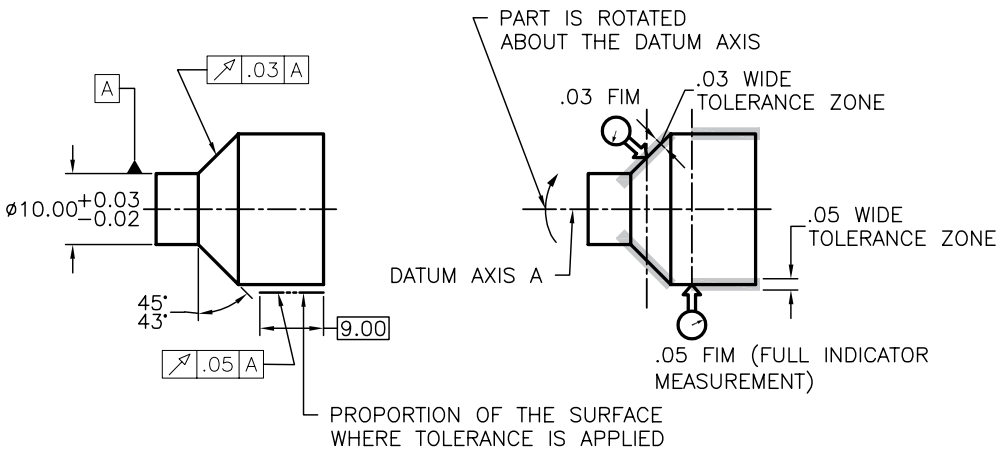

Figure 18-45 *Circular runout applied to a specific portion of surface*

When runout tolerance is directed to a surface, it is applied to the full length of the surface until there is an abrupt change in the surface profile. If a control with the same tolerance is applied to more than one portion of a surface, additional leaders and arrowheads may be used. If different tolerance values are required, separate tolerances must be specified. If only part of a surface or several consecutive portions require the same tolerance, the length on which the tolerance need to apply can be indicated, as shown in Figure 18-46.

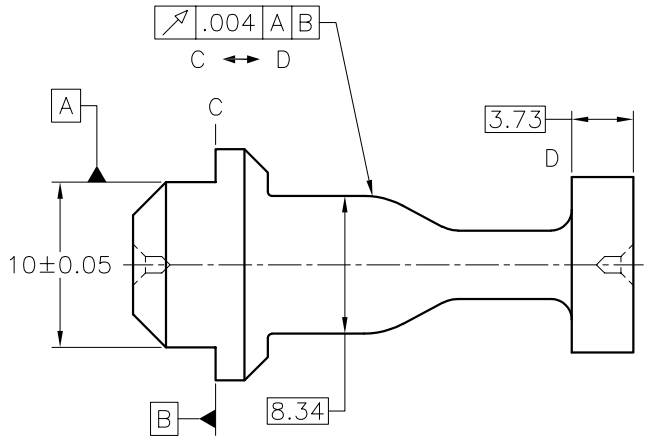

Figure 18-46 *Circular runout applied to specified length of the part*

Total Runout

Total runout is the runout of a complete surface and not merely of each circular element of the part. The tolerance zone is specified by two concentric cylinders separated by the specified tolerance value and coaxial with the datum axis as shown in Figure 18-47. A total runout may be applied to surfaces at various angles, therefore it also controls the profile of the surface in addition to runout.

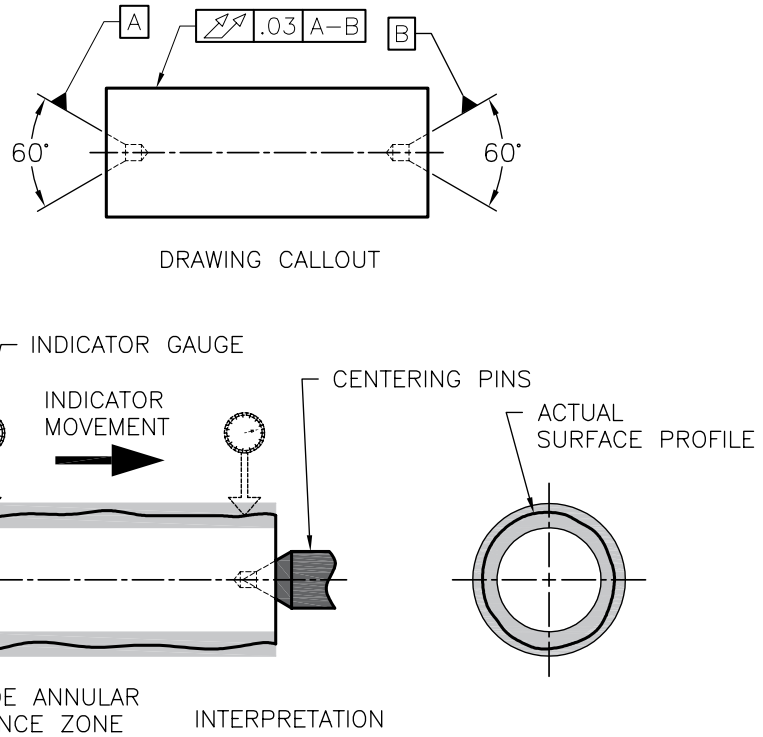

Figure 18-47 *Measurement of tolerance zone for total runout*

Unlike circular tolerance which is only affected by the errors of eccentricity and roundness, total runout is also affected by straightness and conicity of the surface.

For measuring total runout of a cylindrical surface, the indicator is traversed over the full surface while the part is revolved about its datum axis. Measurements are made over the whole surface without resetting the indicator. However, for measurement purposes, the indicator gauge must be capable of following the true profile direction of the surface.

The measuring process is comparatively simple for straight surfaces, such as cylindrical surfaces and flat faces. For conical surfaces, the datum axis can be tilted to the taper angle so that the measured surface becomes parallel to a surface plate. Total runout is the difference between the lowest indicator reading at any position and the highest reading at the same position or at any other position on the same surface.

FITS

Fit is a specific combination of tolerances and allowances in the design of mating parts. When two parts are assembled, the relation resulting from the difference between their sizes before assembly is called a fit. In a general term, fit is the degree of tightness or looseness between two mating parts.

A fit system is the system of standard allowance to suit specific range of basic size. Proper selection of these standard allowances ensures specific classes of fit in mating parts. System of fits can be classified into two systems:

Hole Basis System

In the hole basis system, the size of the hole is kept constant and shaft sizes are varied to obtain various types of fits, refer to Figure 18-48. In this system, lower deviation of hole is kept zero, which means the minimum limit of the hole is same as the basic size. The maximum limit of the hole and the maximum and minimum limits for the shaft are then varied to give desired type of fit. The hole basis system is commonly used compared to shaft basis system. It is more convenient to make holes of fixed size as the tools like drills, taps and reamers have the standard size and are easily available for producing holes. On the other hand, size of the shaft produced by turning or grinding can be very easily varied.

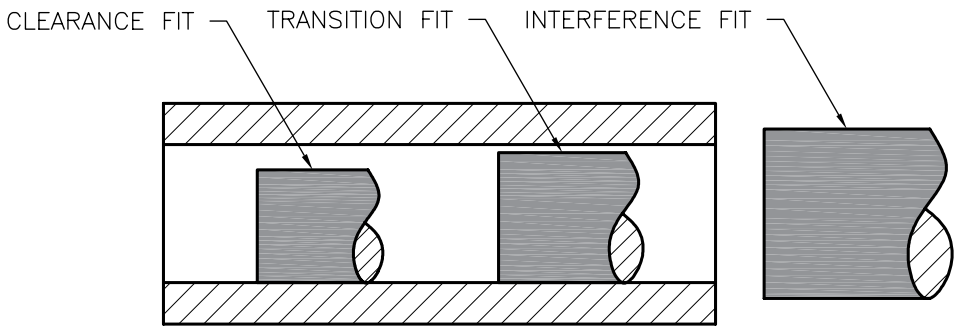

Figure 18-48 *Hole basis system of fits*

Shaft Basis System

In the shaft basis system, the size of the shaft is kept constant and fits are obtained by varying the size of the hole, refer to Figure 18-49. Shaft basis system is used when the ground bars or drawn bars are readily available. These bars do not require further machining and fits are obtained by varying the sizes of the hole. In this system, the upper deviation (fundamental deviation) of shaft is kept zero, which means the maximum limit of the shaft is considered as the basic size and fits are obtained by varying the minimum limit of shaft or both the limits of the hole.

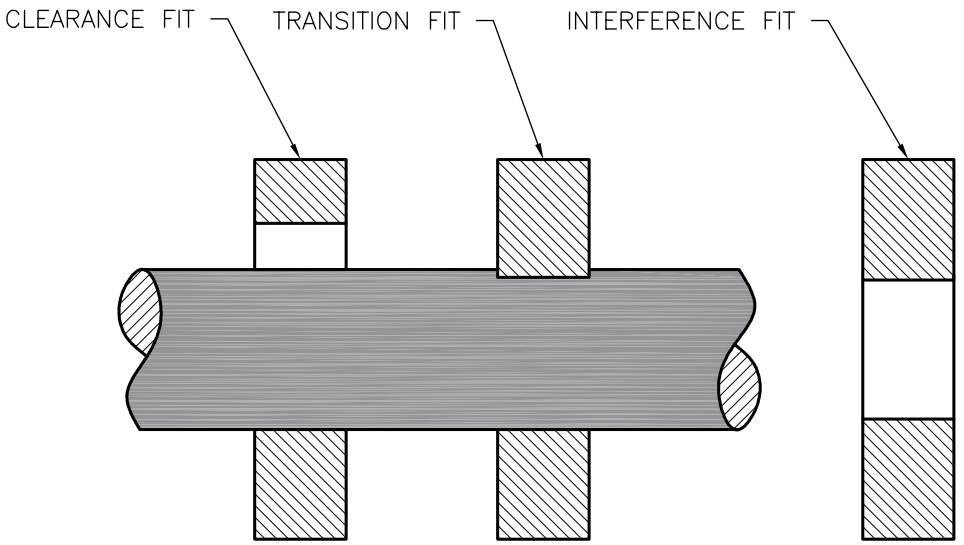

Figure 18-49 *Shaft basis system of fits*

Based on hole and shaft system, fits are categorized into the following three types.

- Clearance fit
- Interference fit
- Transition fit

Clearance Fit

Clearance fit is the difference between the sizes of the hole and the shaft. Clearance fits have limits of size specified in such a manner that there will always remain a clearance between the two mating parts. When it is desirable for the shaft to rotate or slide freely within the hole, clearance fits are maintained between the mating parts. Clearance fits are intended for accurate assembly of parts and bearings. The parts having clearance fits can be assembled by hand because the hole is always larger than the shaft. The tolerances on both the parts are maintained in such a manner that the hole diameter will always be larger than the shaft diameter, as shown in Figure 18-50.

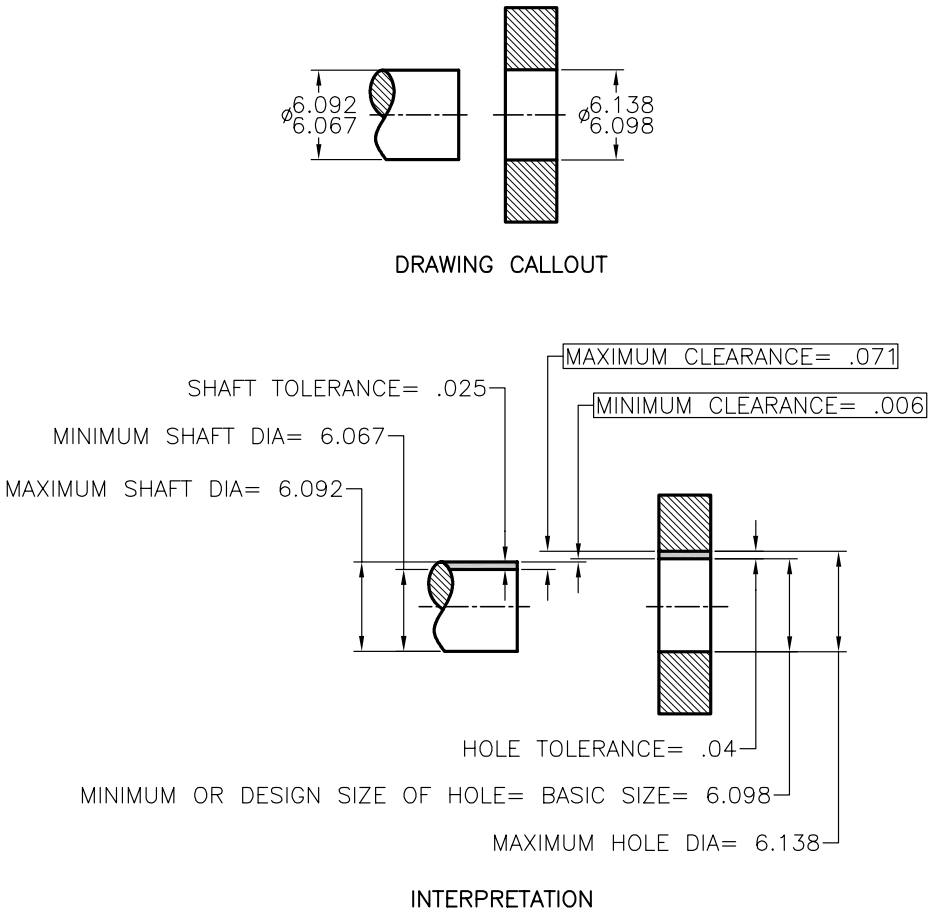

Figure 18-50 *Calculation of clearance fit*

The clearance may be the maximum clearance or the minimum clearance. The minimum clearance fit is the difference between the minimum size of the hole and the maximum size of the shaft.

Minimum clearance = Minimum hole diameter - Maximum shaft diameter

The maximum clearance fit is the difference between the maximum size of the hole and the minimum size of the shaft.

Maximum clearance = Maximum hole diameter - Minimum shaft diameter

Clearance fit is classified into three categories.

Loose Fit

It is used between those mating parts where precision is not required. It provides minimum allowance and generally used on loose pulleys such as agricultural machineries, and so on.

Running Fit

For a running fit, the dimension of shaft should be smaller enough to maintain a film of oil for lubrication. Generally, it is used in bearing pair, and so on.

Slide Fit or Medium Fit

It is used on those mating parts where higher level of precision is required. It provides medium allowance and is used in tool slides, slide valve, automobile parts, and so on.



Note

Maximum clearance in a loose or sliding fit is always greater than zero. On the other hand, in a tight fit, both the maximum and minimum clearance are negative.

Interference Fit

Interference fits have limits of size specified in such a manner that the mating parts always have interference between them. In a general term, the hole will be always smaller than the shaft. In such a fit, the tolerance zone of the hole will always be lower than the tolerance zone of the shaft. Interference fits are used for permanent assemblies of parts which require rigidity and alignment, such as dowel pins and bearings in castings. Parts are usually assembled together by pressure or heat expansion. The tolerances on each part are maintained in a way that the shaft diameter will be larger than the hole diameter, as shown in Figure 18-51.

Maximum interference is the arithmetical difference between the minimum size of the hole and the maximum size of the shaft.

Maximum interference = Maximum shaft diameter - Minimum hole diameter

Minimum interference is the difference between the maximum size of the hole and the minimum size of the shaft.

Minimum interference = Minimum shaft diameter - Maximum hole diameter



Note

Interference fit has a negative allowance which means that interference exists between maximum limit of hole and minimum limit of the shaft.

Interference fit is classified into three categories.

Shrink Fit or Heavy Force Fit

It refers to maximum negative allowance. In an assembly of a hole and a shaft, the hole is expanded by heating and then rapidly cooled in its position. It is used in fitting of rims, seating rings and so on.

Medium Force Fit

These fits have medium negative allowance. In this fit considerable pressure is required to assemble a hole and the shaft. Force fit is generally used in car wheels, armature of dynamos and so on.

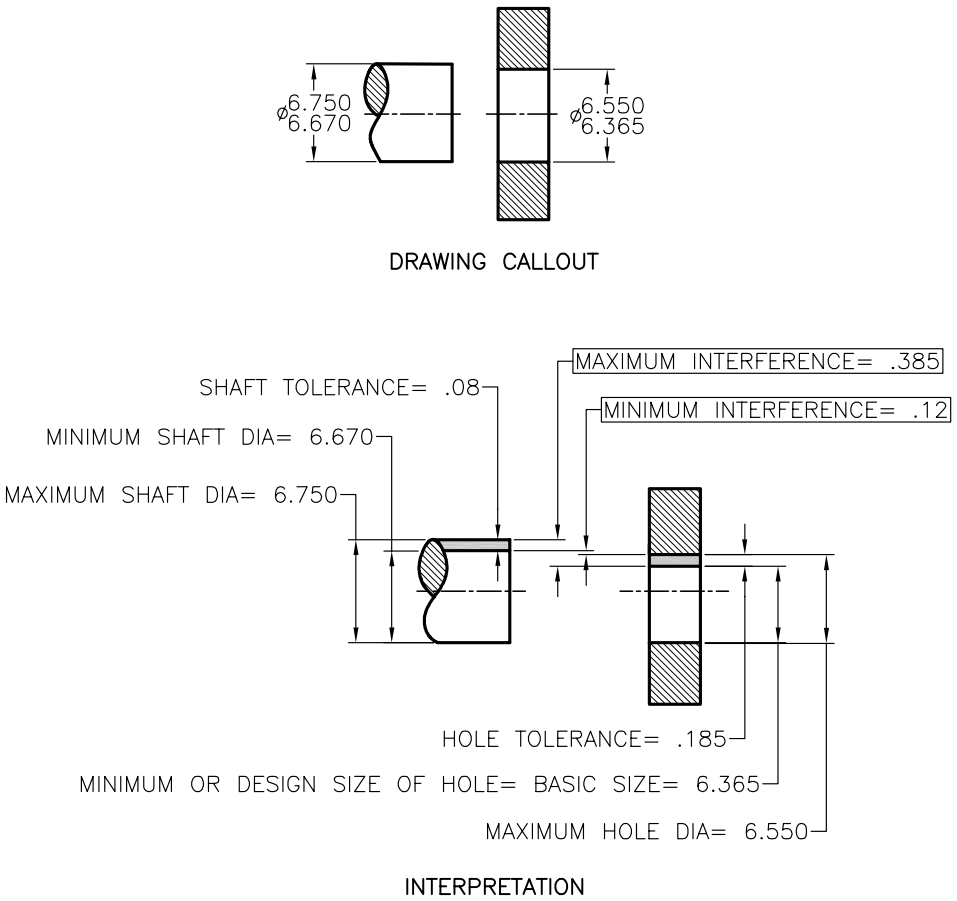

Figure 18-51 *Calculation of interference fit*

Tight Fit or Press Fit

One part can be assembled into the other with a hand hammer or by light pressure. A slight negative allowance exists between two mating parts. It gives a semi-permanent fit and is used on a keyed pulley and shaft, rocker arm, and so on.

Transition Fit

Transition fits have limits of size specified in such a manner that either a clearance or an interference may result depending on the actual value of the individual tolerances of the mating components. Transition fits are a compromise between clearance and interference fits. They are used for applications where accurate location is important but either a small amount of clearance or interference is permissible. When in an assembly of hole and shaft, hole is machined to its smallest size and the shaft is machined to its largest size, the result will be an interference fit, as shown in Figure 18-52. When the hole is at its maximum size and the shaft is at its smallest size, the result will be a clearance fit.

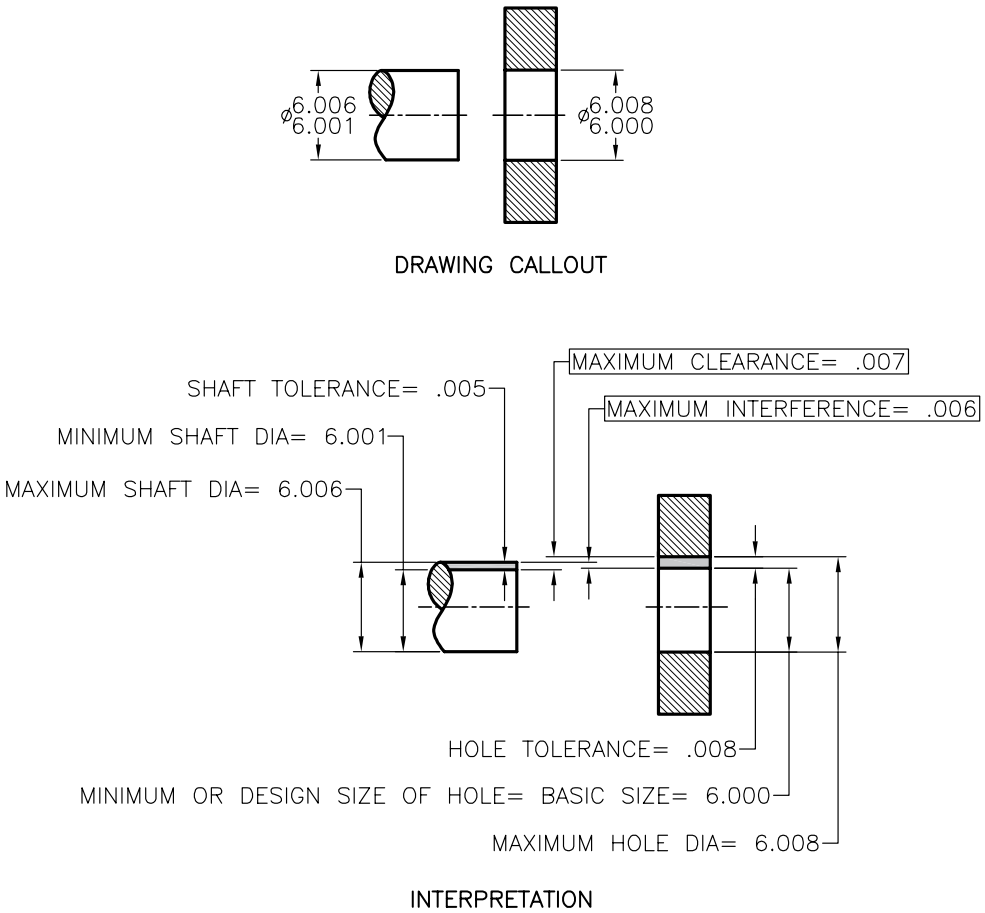

Figure 18-52 *Calculation of transition fit*

Transition fit is sub-classified into three categories.

Push Fit

In this type of fit zero allowance and a light pressure is required in assembling the hole and the shaft. The moving parts show least vibration with this type of fit. It is also known as snug fit. This type of fit is used in automobiles and plastic components.

Force Fit or Shrink Fit

Force fit is used when two mating parts are to be rigidly fixed such that one cannot move without the other. To assemble a hole and a shaft, either requires high pressure to force the shaft into the hole or the hole to be expanded by heating. This type of fit is used in railway wheels, and so on.

Wringing Fit

A slight negative allowance exists between two mating parts in this fit. It requires pressure to force the shaft into the hole and gives a light assembly. It is used in fixing keys, pins, and so on.

STANDARD OF FITS

There are some standards designated for the fits that are used worldwide for designing purpose. The standard of fits provides preferred tolerances for limits and fits of non threaded cylindrical features and defines specific sizes, fits, tolerances, and allowances to use wherever they are applicable. Based on the standards, fits are categorized as inch fits and metric fits. These fits are discussed next.

Standard Inch Fits

The American National Standards Institute published the standard named "Preferred Limits and Fits for Cylindrical Parts" (ANSI B4.1-1967) to define terms and recommended standard allowances, tolerances, and fits for mating parts. The tabular data is provided in thousandths (.001) of an inch. Standard fits are designated by the means of symbols and specifications as shown in Figure 18-53.

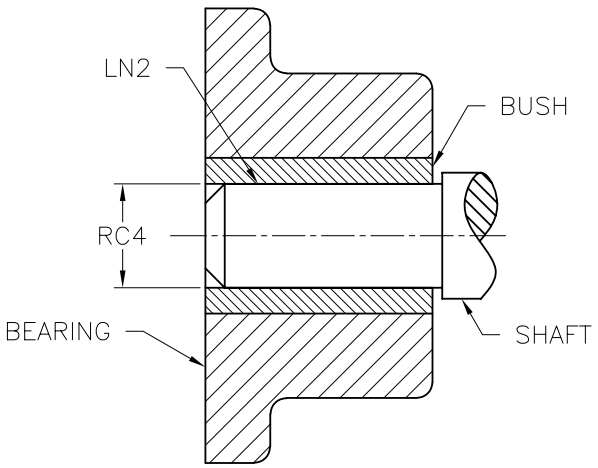

Figure 18-53 *Designation of standard inch fit*

The letter symbols used for standard inch fits are:

RC - Running and sliding fit
LC - Locational clearance fit
LT - Locational transition fit
LN - Locational interference fit
FN - Force or shrink fit

These letter symbols are used in conjunction with numbers representing the class of fit; for example, FN4 represents a class 4 force fit. Each of these symbols (two letters and a number) represents a complete fit for which the minimum and maximum clearance or interference and the limits of size for the mating parts are given directly in ANSI B4.1 chart.

Running and Sliding Fits

Running and sliding fits are intended to provide a smooth running performance with suitable lubrication allowance.

RC1 Precision Sliding Fit
This fit is intended for an accurate location of parts that must assemble without perceptible play for high precision work such as gauges.

RC2 Sliding Fit
This fit is intended for accurate location, but with greater maximum clearance than class RC1. In this type of fit parts can move and turn easily but are not intended to run freely.

RC3 Precision Running Fit
This fit is the closest fit that can be expected to run freely. It is intended to precision work for oil-lubricated bearings at slow speeds and light journal pressures.

RC4 Close Running Fit
This fit is intended chiefly as a running fit for grease or oil-lubricated bearings on accurate machinery with moderate surface speeds and journal pressures where accurate location and minimum play are desired.

RC5 and RC6 Medium Running Fits
These fits are intended for higher running speeds and/or where temperature variations are likely to be encountered.

RC7 Free Running Fit
This fit is intended for use where accuracy is not essential and/or where large temperature variations are likely to be encountered.

RC8 and RC9 Loose Running Fits
These fits are intended for use where materials made to commercial tolerances are involved such as cold-rolled shafting, tubing, and so on.

Locational Clearance Fits
Locational clearance fits are intended for parts that are normally stationary but can be freely assembled or disassembled. These are classified as follows:

LC1 to LC4
These fits have zero clearance, but in practice the probability is that the fit will always have a clearance.

LC5 and LC6
These fits have a minimum clearance intended for close location fits for non-running parts.

LC7 to LC11
These fits have progressively larger clearances and tolerances and are useful for various loose clearances for assembly of bolts and similar parts.

Locational Transition Fits
Locational transition fits are a compromise between clearance and interference fits for application where accuracy of location is important but either a small amount of clearance or interference is permissible. These are classified as follows:

LT1 and LT2

These fits average a slight clearance between parts. A light push is required to fit the mating part.

LT3 and LT4

These fits average virtually no clearance and are for used where some interference can be tolerated.

These are sometimes referred to as an easy keying fit and are used for shaft keys and ball race fits. Assembly is generally done by pressure or hammer blows.

LT5 and LT6

These fits average a slight interference although appreciable assembly force will be required.

Locational Interference Fits

Locational interference fits are used where accuracy of location is the prime importance and for parts requiring rigidity and alignment with no special requirements for bore pressure. These are classified as follows:

LN1 And LN2

These are light press fits with very small minimum interference suitable for parts, such as dowel pins, which are assembled with an arbor press of steel, cast iron, or brass. Parts can normally be dismantled and reassembled.

LN3

This is suitable as a heavy press fit in steel and brass, or a light press fit in more elastic materials and light alloys.

LN4 to LN6

While LN4 can be used for permanent assembly of steel parts, these fits are primarily intended as press fits for soft materials.

Force or Shrink Fits

Force or shrink fits constitute a special type of interference fit. In this kind of fit, the interference varies almost directly with diameter and the difference between its minimum and maximum limits is kept as small as possible to maintain the resulting pressures within reasonable limits. These fits are classified as follows:

FN1 Light Drive Fit

This fit requires light assembly pressure and produces more or less permanent assemblies. It is suitable for thin sections or long fits or for cast-iron external members.

FN2 Medium Drive Fit

This fit is suitable for heavier steel parts or as a shrink fit on light sections.

FN3 Heavy Drive Fit

This fit is suitable for heavier steel parts or as a shrink fit in medium sections.

FN4 And FN5 Force Fits

This fit is suitable for parts that can be highly stressed.

Example 1

For a shaft of 2 inch diameter RC6 fit is assigned. In the table of ANSI B4.1 (Running and sliding fits) for the range of nominal sizes between 1.97 to 3.15 the limit for hole and shaft in the column of RC6 Medium running fit is given as, Hole = +3.00 and 0, Minimum Clearance = 2.50, and Shaft = – 2.5 and – 4.3. These values are taken as thousandths of an inch.

Hence, tolerances for the hole and the shaft will be:

Hole $Ø2.0025^{+.0030}_{0000}$ inch

Shaft $Ø2.000^{-.0025}_{-.0043}$ inch

Minimum Clearance = .0025 inch

Example 2

For a 1.15 inch hole with RC7 fit, value in the column of RC7 is given as, Hole = +2.00 and 0, Clearance = +2.5, and Shaft = – 2.5 and – 3.7. Hence, tolerances will be:

Hole $Ø1.1500^{.0020}_{.0000}$ inch

Shaft $Ø1.1475 \pm ^{-.0025}_{-.0037}$ inch

Minimum Clearance = .0025 inch

Standard Metric Fits

The system of preferred metric limits and fits was developed by the International Organization for Standardization (ISO) and is known as the ANSI B4.2 standard. It is approved and adopted for metric drawings. Metric system of fits designates symbols that are used to define specific dimensional limits on drawings. The system is specified for holes, cylinders, and shafts and is also applicable to fits between parallel surfaces such as keys and slots.

International Tolerance Grade or IT Grade

International Tolerance (IT) Grade establishes the magnitude of the tolerance zone or the amount of part size variation allowed for dimensions of internal and external features. The smaller the grade number, the smaller the tolerance zone, refer to Figure 18-54.

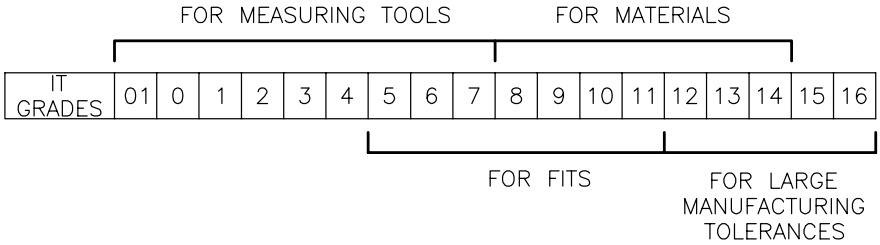

Figure 18-54 *Application of International Tolerance (IT) grades*

Grades 1 through 4 are very precise grades intended primarily for gauge making and similar precision work. Grade 4, however can also be used for very precise production work. Grades 5 through 16 represent a progressive series suitable for cutting operations, such as turning, boring, grinding, milling, and sawing. Grade 5 is the most precise grade obtained by fine grinding and lapping while 16 is the coarsest grade for rough sawing and machining. Grades 12 through 16 are intended for large manufacturing operations such as cold heading, pressing, rolling, and other forming operations.

Symbols for Metric Fits

By combining the IT grade number and the tolerance position letter, the tolerance symbol is established that identifies the actual maximum and minimum limits of the part. The toleranced sizes are thus defined by the basic size of the part added up with the symbol comprising a letter and number, refer to Figure 18-55.

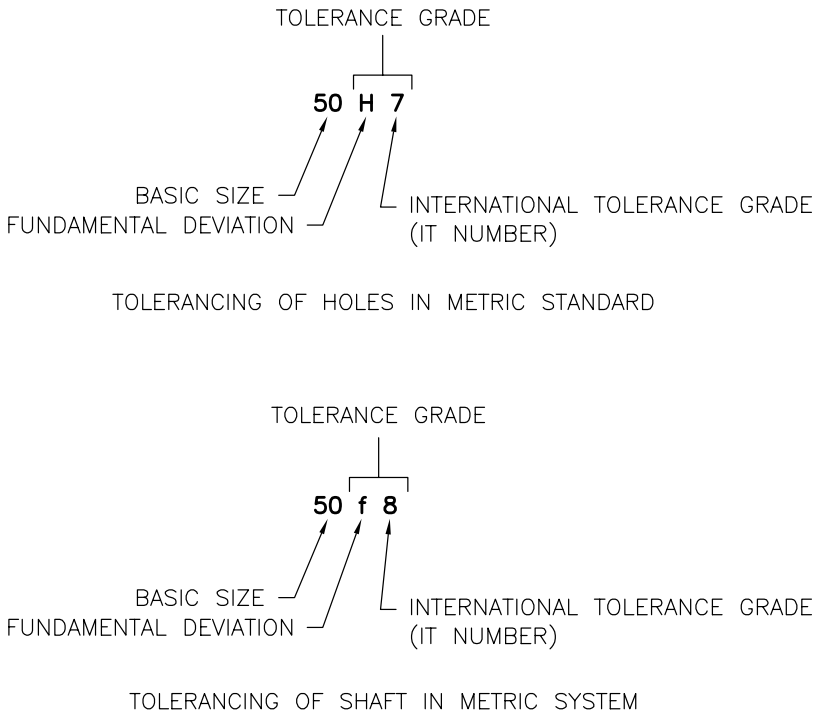

Figure 18-55 *Tolerancing of features in Metric system*

Hole basis fits have a fundamental deviation of "H" on the hole, and shaft basis fits have a fundamental deviation of "h" on the shaft. Normally, the hole basis system is preferred over the shaft basis system because it is easier to produce holes of fixed size rather than producing shafts of fixed size.

A fit is specified by the basic size common for both hole and shaft followed by a symbol corresponding to each component with the internal part symbol preceding the external part symbol, refer to Figure 18-56.

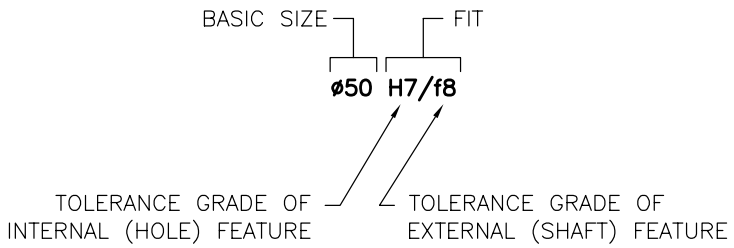

HOLE BASIS SYSTEM OF STANDARD METRIC FITS

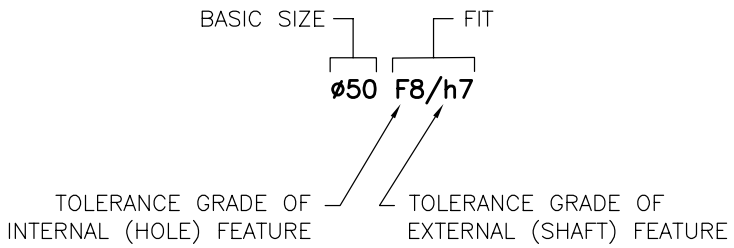

SHAFT BASIS SYSTEM OF STANDARD METRIC FITS

Figure 18-56 *Symbols used in standard metric fits*

Metric Standard Hole Basis Fits System

In the hole basis fits system, the minimum size of the hole is considered as the basic size.

For example, for a Ø16 H7/g6 fit, which is a Preferred Hole Basis Clearance Fit, refer to ANSI B4.2 (Preferred hole basis metric fits), the limits for the hole and shaft will be as follows:

Hole limits = Ø16.000 and Ø16.018
Shaft limits = Ø15.994 and Ø15.983

Minimum clearance = 0.006
Maximum clearance = 0.035

If a Ø40 H7/s6 Preferred Hole Basis Interference Fit is required, refer to ANSI B4.2 (Preferred hole basis metric fits), the limits for the hole and shaft will be as follows:

Hole limits = Ø16.000 and Ø16.018
Shaft limits = Ø16.028 and Ø16.039

Minimum interference = –0.010
Maximum interference = –0.039

Metric Standard Shaft Basis Fits System

The shaft basis fits system is recommended where more than two fits are required on the same shaft. Tolerances for holes and shafts are same as those for a basic hole system, however, the basic size becomes the maximum shaft size.

For example, for a Ø16 D9/h9 fit, which is a Preferred Shaft Basis Clearance Fit, refer to ANSI B4.2 (Preferred shaft basis metric fits), the limits for the hole and shaft will be as follows:

Hole limits = Ø16.050 and Ø16.093
Shaft limits = Ø15.957 and Ø16.000
Minimum clearance = 0.050
Maximum clearance = 0.136

According to metric standard hole and metric standard shaft basis system, the preferred hole and shaft fits are shown in Figure 18-57.

	ISO SYMBOL		DESCRIPTION	
	HOLE BASIS	SHAFT BASIS		
CLEARANCE FITS	H11/c11	C11/h11	LOOSE RUNNING FIT FOR WIDE COMMERCIAL TOLERANCES OR ALLOWANCES ON EXTERNAL MEMBERS.	MORE CLEARANCE
	H9/d9	D9/h9	FREE RUNNING FIT NOT FOR USE WHERE ACCURACY IS ESSENTIAL, BUT GOOD FOR LARGE TEMPERATURE VARIATIONS, HIGH RUNNING SPEEDS, OR HEAVY JOURNAL BEARINGS.	
	H8/f7	F8/h7	CLOSE RUNNING FIR FOR RUNNING ON ACCURATE MACHINES AND FOR ACCURATE LOCATION AT MODERATE SPEEDS AND JOURNAL PRESSURES.	
	H7/g6	G7/h6	SLIDING FIT NOT INTENDED TO RUN FREELY, BUT TO MOVE AND TURN FREELY AND LOCATE ACCURATELY.	
	H7/h6	H7/h6	LOCATIONAL CLEARANCE FIT PROVIDES SNUG FIT FOR LOCATING STATIONARY PARTS, BUT CAN BE FREELY ASSEMBLED AND DISASSEMBLED.	
TRANSITION FITS	H7/k6	K7/h6	LOCATIONAL TRANSITION FIT FOR ACCURATE LOCATION, A COMPROMISE BETWEEN CLEARANCE FIR AND INTERFERENCE FIT.	
	H7/n6	N7/h6	LOCATIONAL TRANSITION FIT FOR MORE ACCURATE LOCATION WHERE GREATER INTERFERENCE IS PERMISSIBLE.	MORE INTERFERENCE
INTERFERENCE FITS	H7/p6	P7/h6	LOCATIONAL INTERFERENCE FIT FOR PARTS REQUIRING RIGIDITY AND ALIGNMENT WITH PRIME ACCURACY OF LOCATION BUT WITHOUT SPECIAL BORE PRESSURE REQUIREMENTS.	
	H7/s6	S7/h6	MEDIUM DRIVE FIT FOR ORDINARY STEEL PARTS OR SHRINK FITS ON LIGHT SECTIONS, THE TIGHTEST FIT USABLE WITH CAST IRON.	
	H7/u6	U7/h6	FORCE FIT SUITABLE FOR PARTS SUITABLE FOR PARTS THAT CAN BE HIGHLY STRESSED OR FOR SHRINK FITS WHERE THE HEAVY PRESSING FORCES REQUIRED ARE IMPRACTICAL	

Figure 18-57 *Description of preferred metric fits*

Example 3

A 50 mm shaft rotates in a bearing. The tolerance for both shaft and bearing is 0.075 mm and the required allowance is 0.10 mm. Determine the dimensions of the shaft and the bearing bore using the hole basis system.

In the hole basis system, hole dimension is the basic size. Hence,

Minimum limit or basic size of the hole = 50 mm

Maximum limit of the hole = Minimum limit of hole + Tolerance
= 50+.075 = 50.075 mm

Maximum limit of the shaft = Minimum limit of the hole - allowance
= 50 – 0.10 = 49.90 mm

Minimum limit of shaft = Maximum limit of shaft – Tolerance
= 49.90 – 0.075 = 49.825 mm

Example 4

For a clearance fit, the limits for a hole and a shaft are specified as:

Shaft = $\text{Ø}50\,^{-0.005}_{-0.018}$ and Hole = $\text{Ø}50\,^{-0.020}_{-0.000}$

Determine:
(a) Basic size
(b) Shaft and hole tolerances
(c) Limits for shaft and hole
(d) Maximum and minimum clearance

From the given data

(a) Basic size = 50 mm

(b) Shaft tolerance = 0.018 – 0.005 = 0.013 mm
Hole tolerance = 0.020 mm

(c) Maximum limit of shaft = 50 – 0.005
= 49.995 mm
Minimum limit of shaft = 50 – 0.018
= 49.982 mm

Maximum limit of hole = 50 + 0.020
= 50.020 mm
Minimum limit of hole = 50 mm

(d) Maximum clearance = Maximum limit of hole – Minimum limit of shaft
= 50.020 – 49.982 = .038 mm

Example 5

A hole and shaft have a basic size of 25 mm refer to Figure 18-58. A clearance fit of maximum clearance of 0.02 mm and a minimum clearance of 0.01 mm is applied between the parts. If the hole tolerance is to be 1.5 times the shaft tolerance then determine the limits for hole and shaft using:

(a) Hole basis system
(b) Shaft basis system

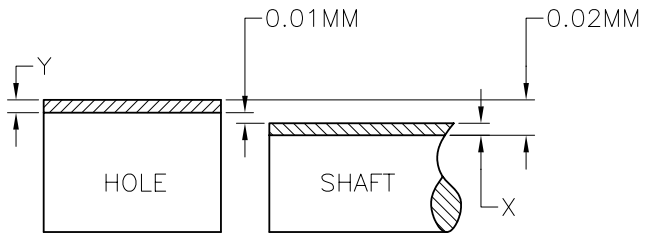

Figure 18-58 *Figure for Example 5*

If X is the tolerance in the shaft and Y is the tolerance in the hole, then

$$Y + 0.01 + X = 0.02$$
$$1.5X + 0.01 + X = 0.02$$

On solving both equations, X = 0.004 and Y = 0.006

(a) Using the hole basis system.

The lower limit of the hole will be the basic size. Hence,

Minimum limit of the hole = 25 mm (Basic Size)
Maximum limit of the hole = Basic size + Tolerance
= 25 + .006 = 25.006 mm

Maximum limit of the shaft = Minimum limit of the hole – Minimum clearance
= 25 – 0.01 = 24.99 mm
Minimum limit of the shaft = Maximum limit of the shaft – Tolerance
= 24.99 – 0.004 = 24.986 mm

(b) Using the shaft basis system.

The maximum limit for the shaft will be the basic size. Hence,

Maximum limit of the shaft = Basic size of shaft = 25 mm
Minimum limit of the shaft = 25 – 0.004 = 24.996 mm

Maximum limit for the hole = 25.01 + 0.006 = 25.016 mm
Minimum limit for the hole = 25 + 0.01 = 25.01 mm

Self-Evaluation Test

Answer the following questions and then compare them to those given at the end of this chapter:

1. In the limit dimensioning method, only the _____ and _____ dimensions are specified.

2. The _____ of a dimension is theoretically the exact value of dimension.

3. The _____ of a dimension is the total permissible variation in its size.

4. _____ are imaginary references used for locating features.

5. _____ is a condition in which the elements of a surface or its axes are in a straight line.

6. _____ is a condition of a surface in which all the points on the surface are at same distance from a common axis.

7. _____ are used to control the form characteristics of a manufactured part.

8. _____ of a surface is a condition in which all surface elements are in one plane.

9. The cylindricity tolerance must be greater than half of the size tolerance. (T/F)

10. Cylindricity tolerances can be applied only to cylindrical surfaces, such as round holes and shafts. (T/F)

Review Questions

Answer the following questions:

1. Which of the following is an interference fit?

   (a) **Push fit** (b) **Force fit**
   (c) **Wringing fit** (d) **Slide fit**

2. In which of the following components, the slide fit is applied?

   (a) **Keyed Pulleys** (b) **Seating Rings**
   (c) **Slide Valves** (d) **Bearings**

3. Location tolerances include the _____, _____, and _____ tolerances.

4. A force fit is used when the two mating parts are to be _____.

5. An orientation tolerance controls _____, _____, and all other angular relationships.

6. A condition of a part feature where the part contains the maximum amount of material is called as _____.

7. The maximum clearance fit is the difference between the _____ size of the hole and the _____ size of the shaft.

8. In the shaft basis system, the size of the shaft is kept constant. (T/F)

9. The maximum clearance in a loose or sliding fit is always greater than zero. (T/F)

10. It is possible to obtain an exact dimension. (T/F)

Exercise 1

The size of a shaft of 30 mm basic size is given as 30±0.04 mm. Find the tolerance.

Exercise 2

A 50 mm diameter shaft is made to rotate in the bush. The tolerances for both shaft and bush are 0.050 mm. Determine the dimension of the shaft and bush to give a maximum clearance of 0.075 mm with the hole basis system.

Exercise 3

Refer to the data available in ANSI B4.2 (Description of preferred fits) and determine the type of fits produced by the mating of holes and shafts for the following sizes.

(a) 30mm H_7/f_6

(b) 23mm U_7/h_6

(c) 30mm P_8/h_5

Exercise 4

A journal and bearing assembly has the following sizes:

Journal = $Ø40^{-0.001}_{-0.002}$

Bearing = $Ø40^{+0.001}_{-0.002}$

Determine the tolerance on journal, tolerance on bearing, minimum clearance, maximum clearance, and type of fit.

Exercise 5

Determine the limits of size, the value of minimum and maximum clearance or interference, and the type of fit for the parts shown in Figure 18-59.

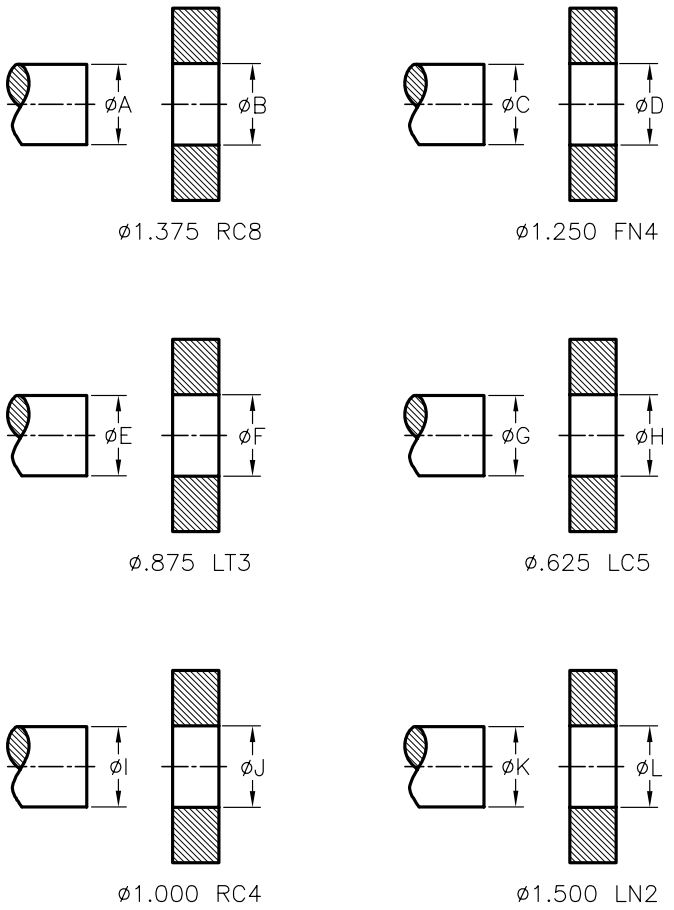

Figure 18-59 *Figure for Exercise 5*

Exercise 6

Draw orthographic views of the sketch shown in Figure 18-60 and add the following geometric tolerances to the appropriate views.

(a) Surfaces A, B, and E are to be datums A, B, and E respectively.
(b) Surface C is to be parallel with datum A within .004 inch and to be flat within .005 inch.
(c) Surface D is to be parallel within .003 inch with datum A and to be flat within .003 inch.
(d) Surface F is to have an angularity within .008 inch with datum A.
(e) Surface G is to be perpendicular within .002 inch with datum A also apply a flatness tolerance of .003 inch on the same surface.
(f) The bottom surface D is to be flat within .002 inch.

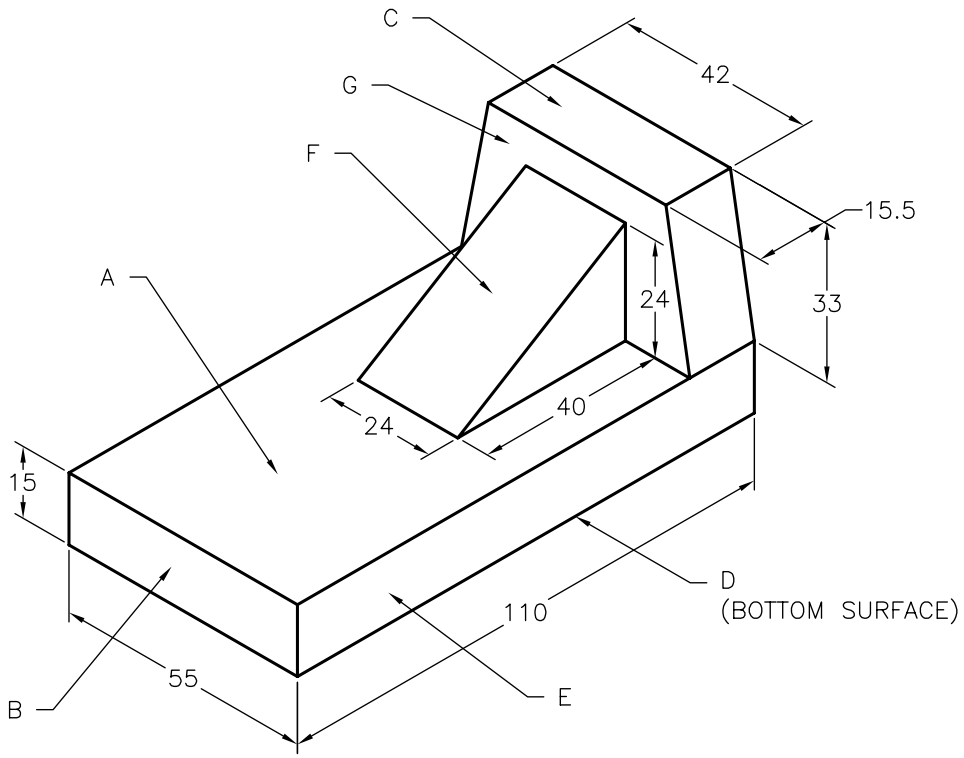

Figure 18-60 *Figure for Exercise 6*

Exercise 7

In Figure 18-61, Part A must fit in Part B so that the maximum clearance does not exceed .005 inch. Find out the maximum and minimum limits for Part B. Flatness tolerance of .002 inch is to be added to the surfaces of both parts.

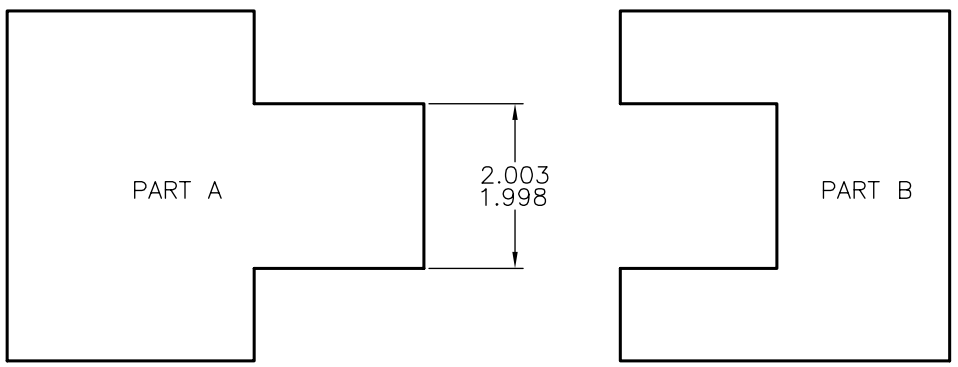

Figure 18-61 *Figure for Exercise 7*

REFERENCES

ASME B4.1-1967 (R2009) Preferred Limits and Fits for Cylindrical Parts
ASME B4.2-1978 Preferred Metric Limits and Fits
ASME Y14.5-2009 Dimensioning and Tolerancing

Answers to Self-Evaluation Test

1. maximum, minimum, **2.** basic size, **3.** tolerance, **4.** Datums, **5.** Straightness, **6.** Cylindricity, **7.** Form tolerances, **8.** Flatness, **9.** F, **10.** T