Chapter 17

Conventional Dimensioning and Projection Theory Using AutoCAD

Learning Objectives

After completing this chapter, you will be able to:

- *Understand the dimensioning units*
- *Understand about basic dimensioning rules*
- *Understand the dimensioning of cylindrical features, holes, rounds, fillets, chamfers, and repetitive features*
- *Understand reference dimensions*
- *Understand working drawings, detail drawings, and assembly drawings*
- *Understand the arrangement of projected views*
- *Understand about the X, Y, and Z axes, the XY, YZ and XZ planes, and parallel planes*
- *Draw orthographic projections and position views*
- *Dimension a drawing*
- *Draw sectional views using different types of sections*
- *Hatch sectioned surfaces*
- *Use and draw auxiliary views*

Key Terms

- *Dimensioning Rules*
- *Reference Dimensions*
- *Cylindrical Features*
- *Dimensioning fillets and chamfers*
- *Dimensioning Components*
- *Detail Drawing*
- *Assembly Drawing*
- *Bill of Materials*
- *Full Section*
- *Half Section*
- *Broken Section*
- *Revolved Section*
- *Offset Section*
- *Aligned Section*
- *Hatch Lines*
- *Auxiliary Views*

DIMENSIONING

Dimensioning is one of the most important elements in a drawing. When you dimension a drawing, you not only provide information of the size of a part, but also a series of instructions to a machinist, an engineer, or an architect. The way the part is positioned in a machine, the sequence of machining operations, and the location of different features of the part depend on how you dimension it. For example, the number of decimal places in a dimension (2.000) determines the type of machine to be used for the machining operation. The machining cost of such an operation is significantly higher than those that have dimension upto only one digit after the decimal (2.0). If you are using a computer numerical control (CNC) machine, then locating a feature may not be a problem, but the number of pieces that you can machine without changing the tool depends on the tolerance assigned to a dimension. A closer tolerance (+.0001, -.0005) will definitely increase the tooling cost and ultimately the cost of the product. Similarly, if a part is to be forged or cast, the radius of the edges and the tolerance you provide to these dimensions determine the cost of the product, the number of defective parts, and the number of parts you get from the die.

While dimensioning, you must consider the manufacturing process involved in making a part and the relationships that exist among different parts in an assembly. If you are not familiar with any operation, get help. You must not assume things when dimensioning or making a piece part drawing. The success of a product, to a large extent, depends on the way you dimension a part. Therefore, never underestimate the importance of dimensioning in a drawing.

DIMENSION UNITS

Generally, metric system of dimensioning is considered as the official standard of measurement for engineering drawings, but most of the drawings in North America are still dimensioned in decimal inches. So, you should be familiar with all dimensioning systems that are used in the interpretation of an engineering drawing. The dimensions used in this book are primarily decimal inch. However, metric dimensions are used very frequently. To make information more clear, engineering drawings should contain one of the following notes:

- Unless Otherwise Specified, All Dimensions Are in Millimeters
- Unless Otherwise Specified, All Dimensions Are in Inches

The Inch and Metric unit system is discussed next.

Inch Units

An inch is a unit of length in the imperial and United States customary systems of measurement. Historically, an inch was also used in a number of other systems of units. Traditional standards for the exact length of an inch have varied in the past, but since July 1959, when the international yard was defined as 0.9144 metres, the international inch has been exactly 25.4 mm. There are 12 inches in a foot and 36 inches in a yard.

The Decimal-Inch System

In the Decimal-Inch system, the parts are designed in basic decimal increments (preferably .02 inch) and the values are expressed as two numbers after the decimal, as shown in Figure 17-1. Using the .02 value as the increment the second value after the decimal will be an even number

or zero. In some cases to meet the design requirements you can also use the values other than the increment of .02 inch, such as .25 inch or .29 inch. Whenever greater accuracy is required, the dimensions are expressed as values upto three or four decimal places, such as 1.6587 or 5.9876. In Decimal-Inch dimensioning system, the numbers to the right of the decimal point indicate the degree of precision. For the dimensions less than 1 there will not be a zero before the decimal point.

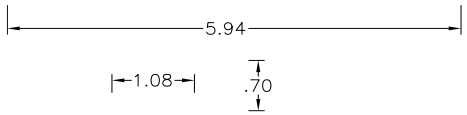

Figure 17-1 *Dimensions in the Decimal-Inch system*

The Fractional-Inch System

In the Fractional-Inch system, the parts are designed in common fractions, refer to Figure 17-2. The smallest fraction used is 1/64th of an inch. Sizes other than common fractions are expressed as decimals. This system of dimensioning was replaced by the Decimal-Inch dimensioning system of engineering drawings over 50 years ago. But you should be aware of this unit system because some tools like drills, reamers, and pipes are being manufactured using Fraction-Inch system.

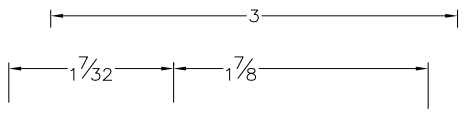

Figure 17-2 *Dimensions in the Fractional-Inch system*

SI (Metric) Units

The standard metric units used in an engineering drawing are the millimeters for linear measurements and the micrometers for surface roughness, refer to Figure 17-3. In the metric system of dimensioning, the numbers to the right of the decimal point indicate the degree of precision. Whole dimensions in a drawing do not require a zero to the right of the decimal point. For example, the dimension of 5 mm will be expressed as 5 not 5.0, unless and until the part to be manufactured requires that specific precision. For expressing large dimensions a space should be used to separate groups of three numbers in metric values, such as 54 487 or 4.524 47.

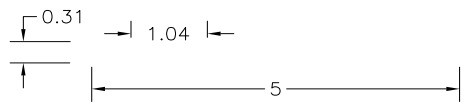

Figure 17-3 *Dimensions in the Metric (Millimeters) system*

DIMENSIONING COMPONENTS

A dimension consists of the following components, refer to Figure 17-4:

- Extension line
- Arrows or tick marks
- Dimension line
- Leader lines
- Dimension text

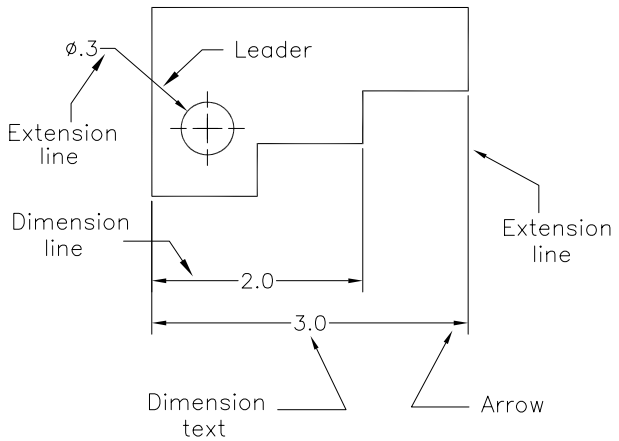

Figure 17-4 *Dimensioning components*

The extension lines are drawn to extend the points that are dimensioned. The length of the extension lines is determined by the number of dimensions and the placement of the dimension lines. These lines are generally drawn perpendicular to the surface. The dimension lines are drawn between the extension lines at a specified distance from the object lines. The dimension text is a numerical value that represents the distance between the points. The dimension text can also consist of a variable (A, B, X, Y, Z12,...). In such a case, the value assigned to it is defined in a separate table. The dimension text can be centered around or on the top of the dimension line. Arrows or tick marks are drawn at the end of the dimension line to indicate the start and end of the dimension. Leaders are used for dimensioning a circle, arc, or any nonlinear element of a drawing. They are also used to attach a note to a feature or to give the part numbers in an assembly drawing.

COMMON RULES FOR DIMENSIONING

1. Place dimensions in the view that best shows the shape of the object, refer to Figure 17-5. Sometimes dimensions can placed between views according to the availability of space between the views.

2. Place dimensions between the views when possible, refer to Figure 17-6.

3. You should make the dimensions in a separate layer/layers. This makes it easy to edit or control the display of dimensions (freeze, thaw, lock, and unlock). Also, the dimension layer/layers should be assigned a unique color so that at the time of plotting, you can assign the

desired pen to plot the dimensions. This helps in controlling the line width and the contrast of dimensions at the time of plotting.

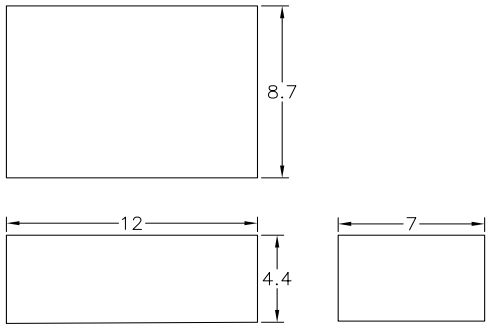

Figure 17-5 *Dimensions placed in appropriate views*

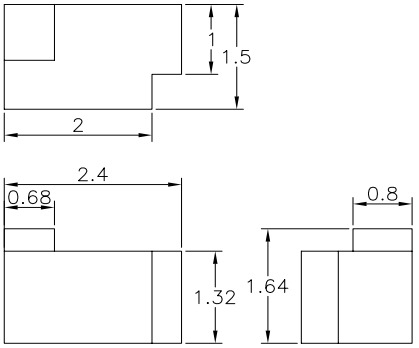

Figure 17-6 *Place dimensions between views*

4. The distance of the first dimension line should be at least 0.375 units (10 units for metric drawing) from the object line. In CAD drawing, this distance may be 0.75 to 1.0 units (19 to 25 units for metric drawings). Once you decide on the spacing, it should be maintained throughout the drawing.

5. The distance between the first dimension line and the second dimension line must be at least 0.25 unit. In CAD drawings, this distance may be 0.25 to 0.5 unit (6 to 12 units for metric drawings). If there are more dimension lines (parallel dimensions), the distances between them must be the same (0.25 to 0.5 unit). Once you decide on the spacing (0.25 to 0.5), the same spacing should be maintained throughout the drawing. An appropriate snap setting is useful for maintaining this space. If you are using baseline dimensioning, you can use AutoCAD's **DIMDLI** variable to set the spacing. The dimensions must be placed in such a way so that they are not crowded, especially when there is not much space, refer to Figure 17-7.

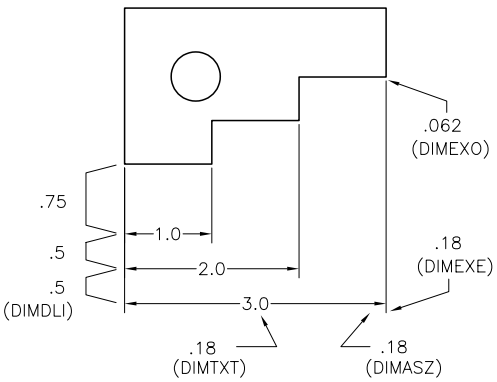

Figure 17-7 *Arrow size, text height, and spacing between dimension lines*

6. For parallel dimension lines, the dimension text can be staggered if there is not enough room between the dimension lines to place the dimension text. You can use the AutoCAD Object Grips feature or the **DIMTEDIT** command to stagger the dimension text, refer to Figure 17-8.

7. All dimensions should be given outside the view. However, the dimensions can be shown inside the view if they can be easily understood there and cause no confusion with the other dimensions or details, refer to Figure 17-9. In case of large drawings, dimensions can be placed on the view to improve clarity.

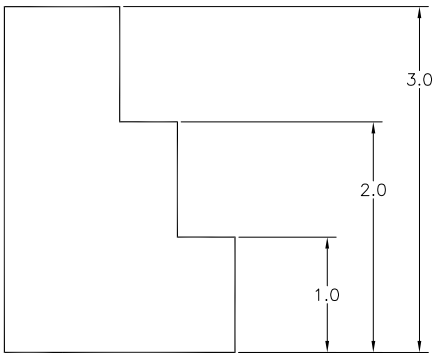

Figure 17-8 *Staggered dimensions*

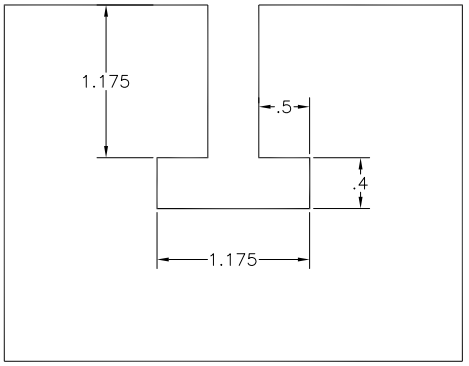

Figure 17-9 *Dimensions inside the view*

8. Dimension lines should not cross the extension lines, refer to Figure 17-10. You can accomplish this by giving the smallest dimension first and then the next largest dimension, refer to Figure 17-11.

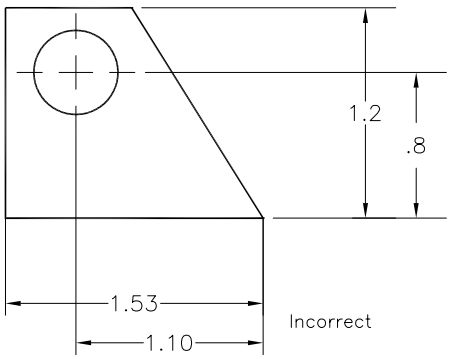

Figure 17-10 *Dimensions placed incorrectly*

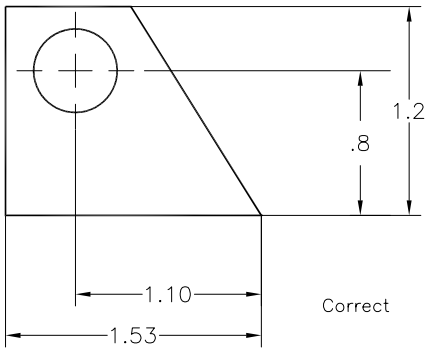

Figure 17-11 *Dimensions placed correctly*

9. If you decide to have the dimension text aligned with the dimension line, then the entire dimension text in the drawing must be aligned, refer to Figure 17-12. Similarly, if you decide to have the dimension text horizontal or above the dimension line, then to maintain uniformity in the drawing, the entire dimension text must be horizontal, refer to Figure 17-13 or above the dimension line, refer to Figure 17-14.

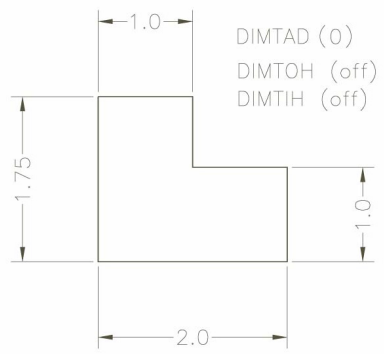

Figure 17-12 *Dimension text aligned with the dimension line*

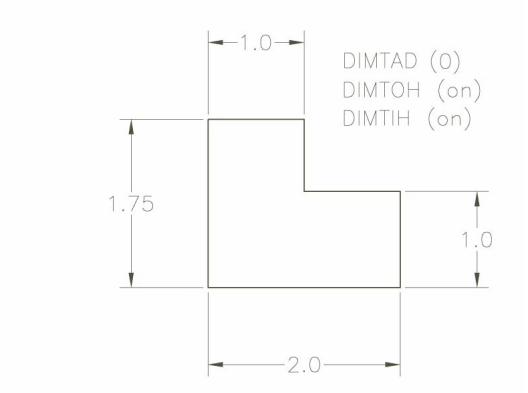

Figure 17-13 *Horizontal dimension text*

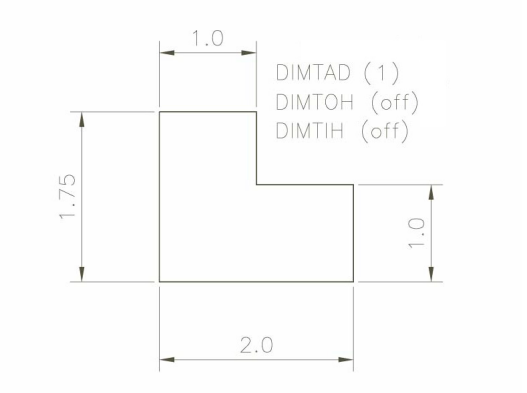

Figure 17-14 *Dimension text above the dimension line*

10. If you have a series of continuous dimensions, they should be placed in a continuous line, refer to Figure 17-15. Sometimes you may not be able to apply the dimensions in a continuous line even after adjusting the dimension variables. In that case, apply the dimensions that are parallel, refer to Figure 17-16.

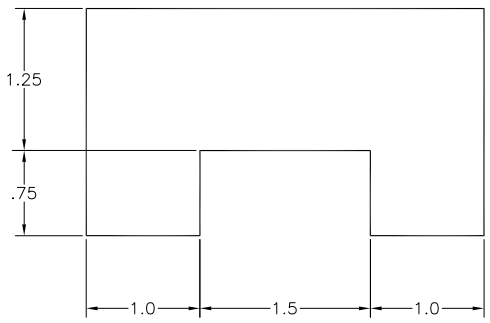

Figure 17-15 *Continuous dimensions*

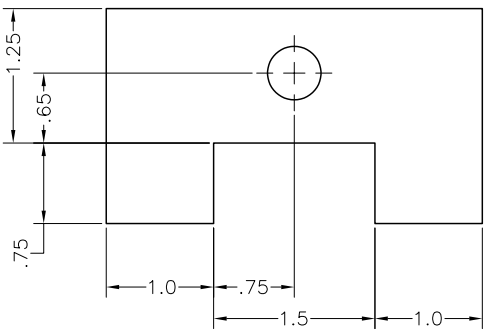

Figure 17-16 *Parallel dimensions*

11. You should not dimension with the hidden lines. The dimension should be given where the feature is visible, refer to Figure 17-17. However, in some complicated drawings, you might be justified to dimension a detail with a hidden line.

12. The dimensions must be given where the feature that you are dimensioning is obvious and shows the contour of the feature, refer to Figure 17-18.

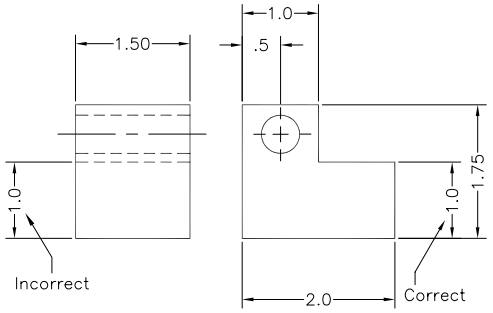

Figure 17-17 *Undimensioned hidden lines*

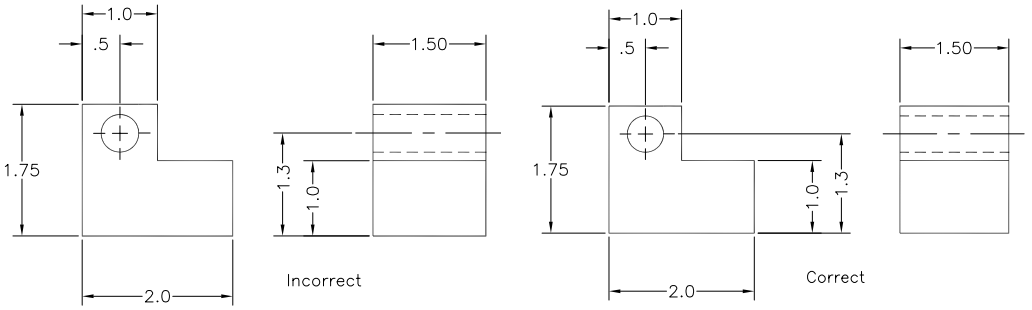

Figure 17-18 *Dimensions given where they are obvious*

13. The dimensions must not be repeated, as shown in Figure 17-19 as it makes difficult to update them.

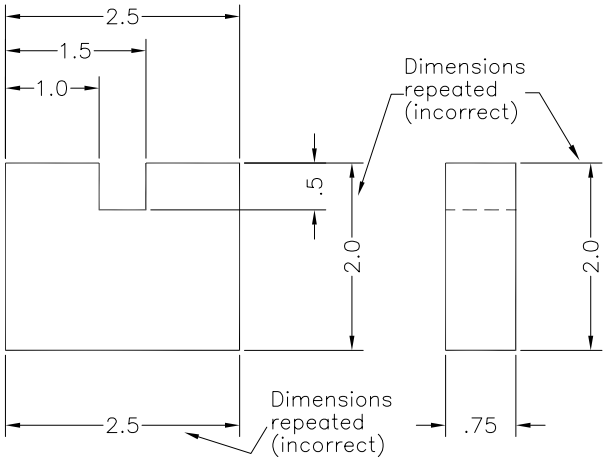

Figure 17-19 *incorrect method of dimensioning*

14. The dimensions must be given depending on how the part will be machined, and also on the relationship that exists between the different features of the part, refer to Figure 17-20.

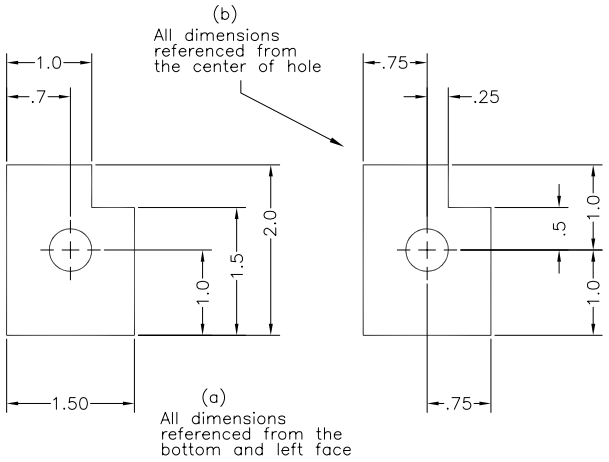

Figure 17-20 *Different dimensioning styles*

15. The dimensions enclosed in parenthesis can be identified as reference dimensions, refer to Figure 17-21. A reference dimension is placed on a drawing for information purpose only. Reference dimensions are not used for manufacturing of the part therefore it must be clearly labeled. Previously, reference dimensions were identified by placing the abbreviation REF after or below the dimension.

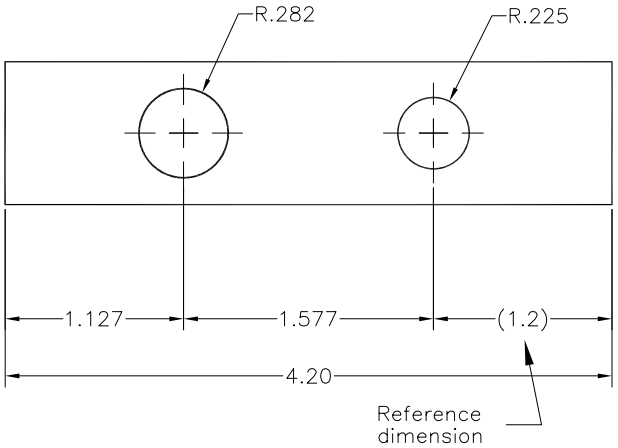

Figure 17-21 *Reference dimension marked in parenthesis*

16. If you give continuous (incremental) dimensions for dimensioning various features of a part, the overall dimension must be omitted or given as a reference dimension, refer to Figure 17-22. Similarly, if you give the overall dimension, one of the continuous (incremental) dimensions must be omitted or given as a reference dimension. Otherwise, there will be a conflict in tolerances. For example, the total positive tolerance on the three incremental dimensions shown in Figure 17-22 is 0.06. Therefore, the maximum size based on the incremental dimensions is (1 + 0.02) + (1 + 0.02) + (1 + 0.02) = 3.06. Also, the positive tolerance on the overall 3.0 dimension is 0.02. Based on this dimension, the overall size of the

part must not exceed 3.02. This causes a conflict in tolerances with incremental dimensions because the total tolerance is 0.06, whereas with the overall dimension, the total tolerance is only 0.02.

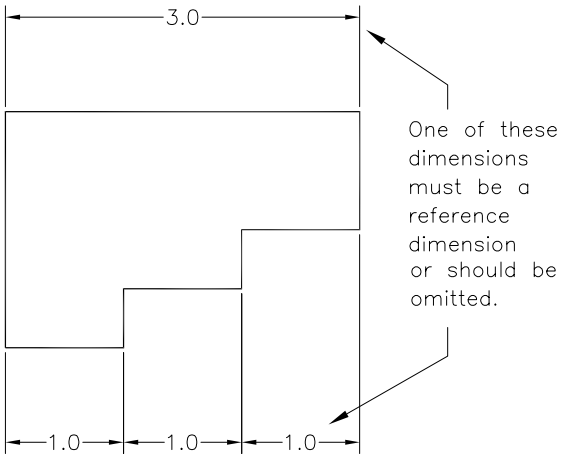

Figure 17-22 *Referencing or omitting a dimension*

17. If the dimension of a feature appears in a section view, you must not hatch the dimension text, refer to Figure 17-23. You can accomplish this task by selecting the dimension object while defining the hatch boundary. You can also accomplish this by drawing a rectangle around the dimension text and then hatching the area after excluding the rectangle from the hatch boundary.

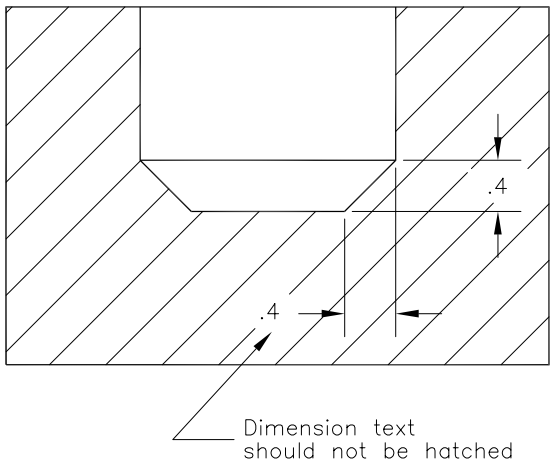

Figure 17-23 *Dimension text excluded from hatching*

18. While dimensioning a circle, the diameter should be preceded by the diameter symbol, refer to Figure 17-24. AutoCAD automatically puts the diameter symbol in front of the diameter value. However, if you override the default diameter value, you can use %%c followed by the value of the diameter (%%c1.00) to put the diameter symbol before the diameter dimension.

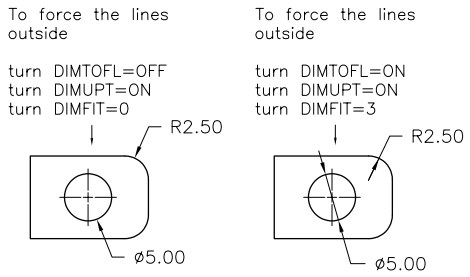

Figure 17-24 *Diameter should be preceded by the diameter symbol*

19. Cylindrical features should be dimensioned by the method shown in Figure 17-25. The circle must be dimensioned as a diameter, never as a radius. Where the diameters of a number of concentric cylinders are to be given, they must be shown on the end view, refer to Figure 17-26. For diameter dimensions, the diameter symbol Ø is used before the dimension.

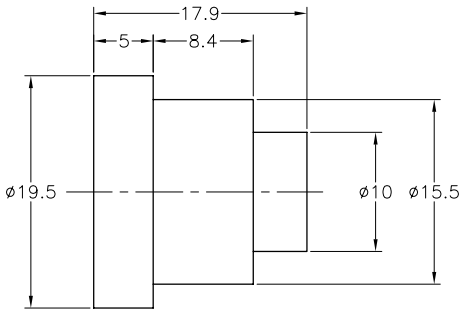

Figure 17-25 *Dimensioning of cylindrical features*

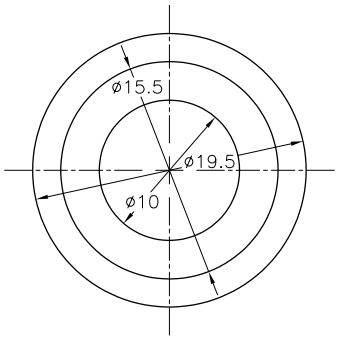

Figure 17-26 *Dimensioning diameters on end view*

20. For dimensioning a circular arc, letter R is added before the radius dimension, as shown in Figure 17-27. Also, the center of the arc should be indicated by a small cross. You can use the **DIMCEN** variable in AutoCAD to control the size of the cross. If the value of this variable is 0, AutoCAD does not draw the cross in the center when you dimension an arc or a circle.

21. The preferred method for designating the size of holes is shown in Figure 17–28. While dimensioning a hole feature a leader is used and the symbol Ø precedes the size of the hole. When two or more holes of the same size are required, the number of holes is specified. If a blind hole is required, the depth of the hole is specified by the depth symbol in the dimensioning note; otherwise, it is assumed that all holes shown are through holes. The degree of accuracy to which a hole is to be machined is specified on the drawing. The use of operational names such as *turn, bore, grind*, *ream*, *tap*, and *thread* with dimensions should be avoided.

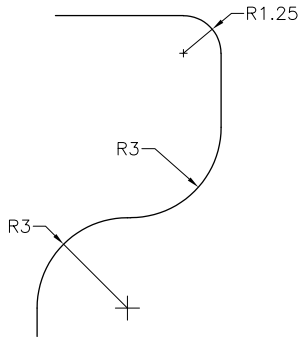

Figure 17-27 *Dimensioning of arcs*

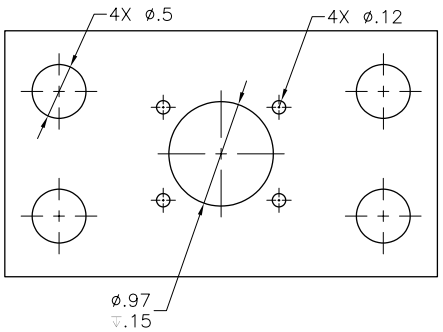

Figure 17-28 *Dimensioning of holes*

22. A dimension that is not to be scaled should be indicated by drawing a straight line under the dimension text, refer to Figure 17-29. This line can be drawn by using the **DDEDIT** command. If you invoke this command, AutoCAD will prompt you to select an annotative object. Select the object; the **Text Editor** will be displayed and a new **Text Editor** tab will be added to the **Ribbon**. Select the text (< >) , and then choose the **U** button in the **Formatting** panel of the **Text Editor** tab to underline the text.

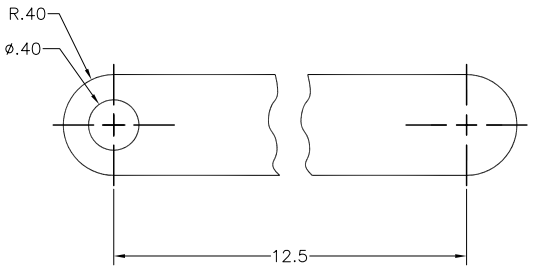

Figure 17-29 *Specifying dimension that is not to be scaled*

Dimensioning of Rounds and Fillets

A round, or radius, or chamfer is applied on the outer surface of a part to improve its appearance and to avoid formation of a sharp edge that might chip off under a sharp blow or cause interference. It is also a safety feature. In a fillet, additional material is allowed in the inner intersection of two surfaces, as shown in Figure 17-30. If all the fillets and rounds have equal dimension then a general note, such as ROUNDS AND FILLETS R10 or ROUNDS AND FILLETS R10 UNLESS OTHERWISE SPECIFIED, is normally used on the drawing instead of placing individual dimensions.

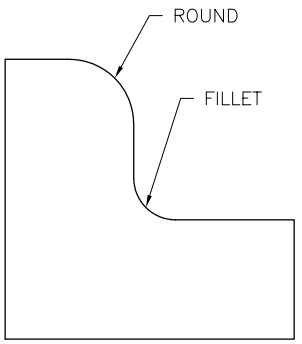

Figure 17-30 *Fillets and rounds*

A chamfer can be dimensioned by specifying the chamfer angle and the distance of the chamfer from the edge. It can also be dimensioned by specifying the distances, as shown in Figure 17-31.

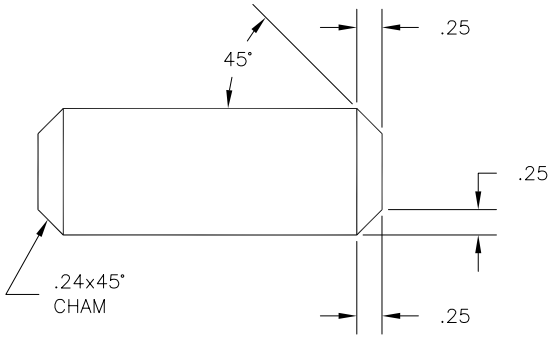

Figure 17-31 *Different ways of specifying a chamfer*

Dimensioning of Repetitive Features

Repetitive features and dimensions may be specified on a drawing by the use of an X preceded by the number to indicate the "number of times" or "places" for which they are required. A space is inserted between X and the specified dimension, as shown in Figure 17-32. If there are similar repetitive features of different sizes, some other form of indication may be required in order to ensure the legibility of drawing, as shown in Figure 17-33.

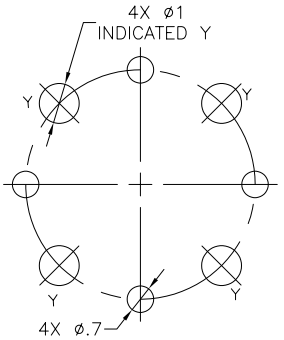

Figure 17-32 *Dimensioning of repetitive features with different sizes*

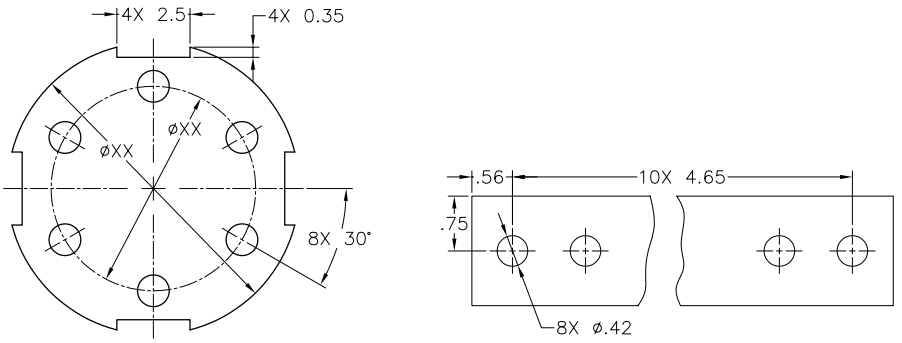

Figure 17-33 *Dimensioning of repetitive features*

WORKING DRAWINGS

A working drawing is a drawing that provides information and instructions for the manufacturing or construction of parts, machines, or structures. A working drawing is intended to provide the description about shape, dimensions or size, and specifications of the product. Because working drawings may be sent to another plant, another company, or even to another country to manufacture, construct, or assemble the final product, the drawing should qualify the drawing standards of the respective plant, company, or country.

Generally, working drawings are classified into two groups:

Detail Drawing

A detail drawing is the drawing of a single part that includes a complete and exact description of its form and shape. Detail drawings provide necessary information for manufacturing of parts for some specific product or structure, refer to Figure 17-34. Each detail drawing must be drawn and dimensioned to completely describe the size and shape of the part. It should also contain information that might be needed in manufacturing the part. The finished surfaces and all the necessary operations should be indicated by using symbols or notes on the drawing. The material of which the part is made and the number of parts that are required for the production of the assembled product must be given in the title block. Detail drawings should also contain part numbers. This information is used in the bill of materials and the assembly drawing. The part numbers make it easier to locate the drawing of a part. Regardless of the part's size, you should make a detail drawing of each part on a separate drawing. When required, these detail drawings can be inserted in the assembly drawing by using the **External Reference** tool from the **Reference** panel of the **Insert** tab.

Assembly Drawing

An assembly drawing is the presentation of a product or structure put together, showing all parts in their operational positions. These drawings provide necessary information about the assembly of parts and structures, refer to Figure 17-35. Assembly drawings may include instructions, lists of component parts, reference numbers, references to detail drawings or shop drawings, and specifications. The main view may be drawn in full section so that the assembly drawing shows nearly all the individual parts and their locations. Additional views should be drawn only when some of the parts cannot be seen in the main view. The hidden lines, as far as possible, should be omitted from the assembly drawing because they clutter it and might cause confusion. However, a hidden line may be drawn if it helps to understand the product. Only assembly dimensions should be shown in the assembly drawing. Each part can be identified on the assembly drawing by the number used in the detail drawing and in the bill of materials. The part numbers should be given as shown in Figure 17-35. A part number consists of a text string for the detail number, a circle (balloon), a leader line, and an arrow or dot. The text should be made at least 0.2 inches (5 mm) high and enclosed in a 0.4 inch (10 mm) circle (balloon). The center of the circle must be located not less than 0.8 inches (20 mm) from the nearest line on the drawing. Also, the leader line should be radial with respect to the circle (balloon). The assembly drawing may also contain an exploded isometric or isometric view of the assembled unit.

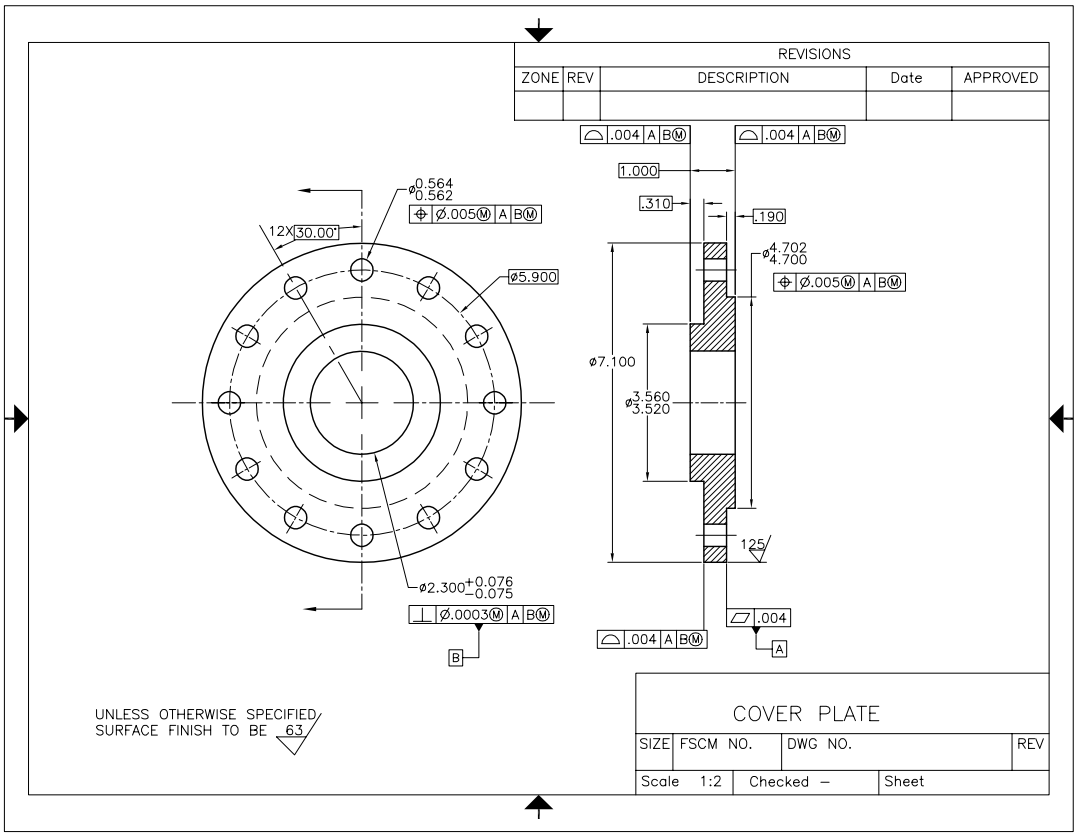

Figure 17-34 *Detail drawing of Cover Plate*

BILL OF MATERIALS

A bill of materials is a list of parts placed on an assembly drawing just above the title block. The bill of materials contains the part number, part description, material, quantity required, and drawing numbers of the detail drawings, refer to Figure 17-35. If the bill of materials is placed above the title block, the parts should be listed in ascending order so that the first part is at the bottom of the table. The bill of materials may also be placed at the top of the drawing. In that case, the parts must be listed in descending order with the first part at the top of the table. This structure allows room for any additional items that may be added to the list.

MULTIVIEW DRAWINGS

When designers design a product, they visualize its shape in their minds. To represent that shape on paper or to communicate the idea to people, they must draw a picture of the product or its orthographic views. Pictorial drawings, such as isometric drawings, convey the shape of the object, but it is difficult to show all features and dimensions in an isometric drawing. Therefore, in industry, multiview drawings are the accepted standards for representing products. Multiview drawings are also known as orthographic projection drawings. To draw different views of an object, it is very important to visualize the shape of the product. The same is true when you look at different views of an object to determine its shape. To facilitate visualizing the shapes, you

must picture the object in 3D space with reference to the *X*, *Y*, and *Z* axes. These reference axes can then be used to project the image into different planes. This process of visualizing objects with reference to different axes is, to some extent, natural in human beings. You might have noticed that sometimes, when looking at objects that are at an angle, people tilt their heads. This is a natural reaction, an effort to position the object with respect to an imaginary reference frame (*X*, *Y*, and *Z* axes).

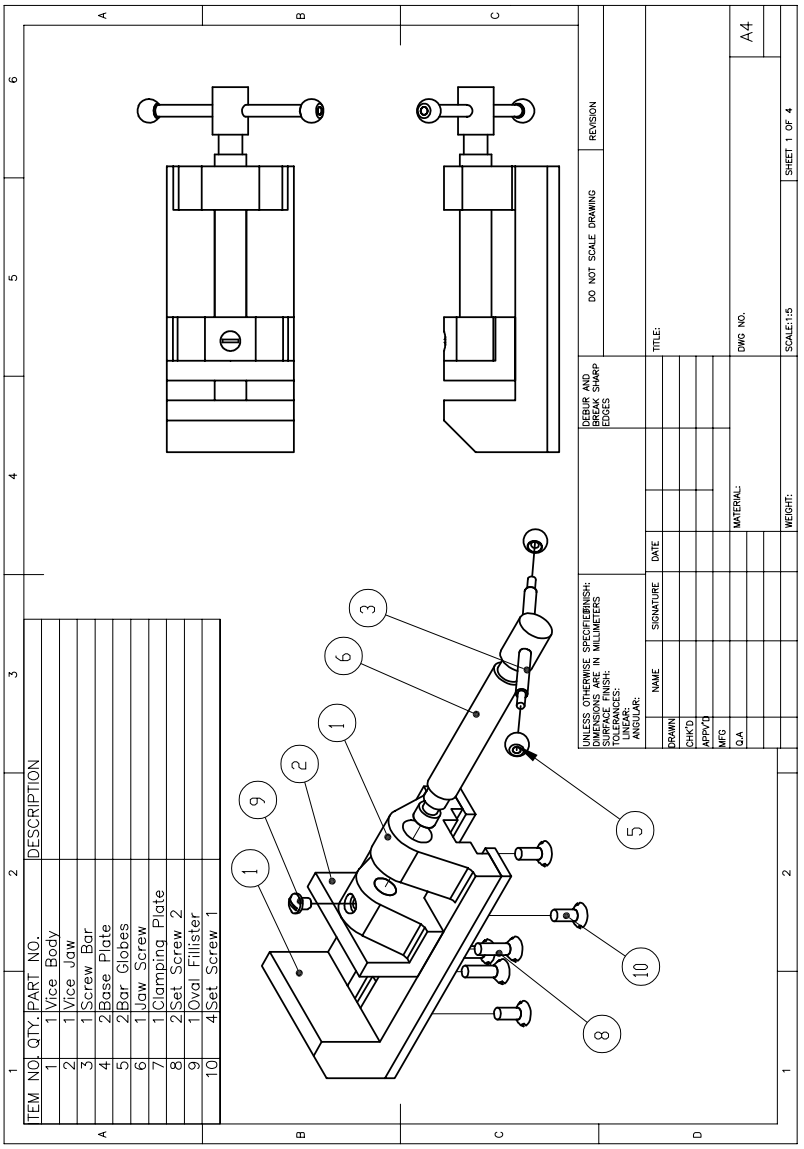

Figure 17-35 *Assembly drawing with title block and bill of materials*

UNDERSTANDING THE X, Y, AND Z AXES

To understand the *X*, *Y*, and *Z* axes, imagine a flat sheet of paper on the table. The horizontal edge represents the positive *X* axis, and the other edge along the width of the sheet, represents the positive *Y* axis. The point where these two axes intersect is the origin. Now, if you draw a line perpendicular to the sheet passing through the origin, the line defines the positive *Z* axis, refer to Figure 17-36. If you project the *X*, *Y*, and *Z* axes in the opposite direction beyond the origin, you will get the negative *X*, *Y*, and *Z* axes, refer to Figure 17-37.

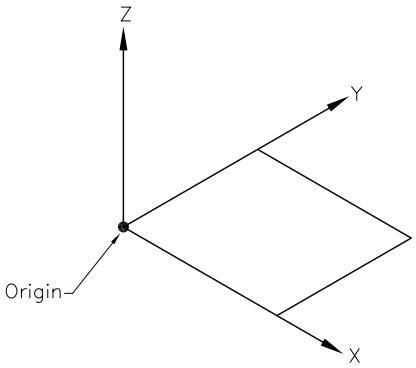

Figure 17-36 *X, Y, and Z axes*

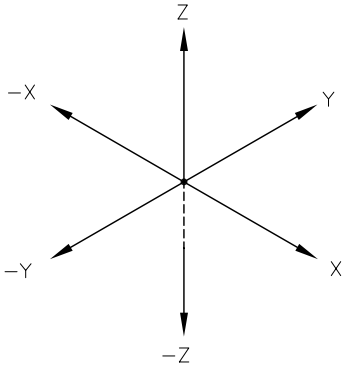

Figure 17-37 *Positive and negative axes*

The space between the *X* and *Y* axes is called the *XY* plane. Similarly, the space between the *Y* and *Z* axes is called the *YZ* plane, and the space between the *X* and *Z* axes is called the *XZ* plane, refer to Figure 17-38. A plane parallel to these planes is called a parallel plane, refer to Figure 17-39.

ORTHOGRAPHIC PROJECTIONS

The first step in drawing an orthographic projection is to position the object along the imaginary *X*, *Y*, and *Z* axes. For example, if you want to draw orthographic projections of the step block shown in Figure 17-40, position the block such that the far left corner coincides with the origin, and then align it with the *X*, *Y*, and *Z* axes.

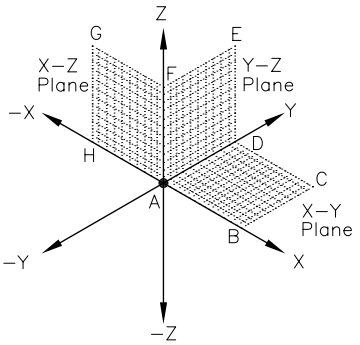

Figure 17-38 *XY, YZ, and XZ planes*

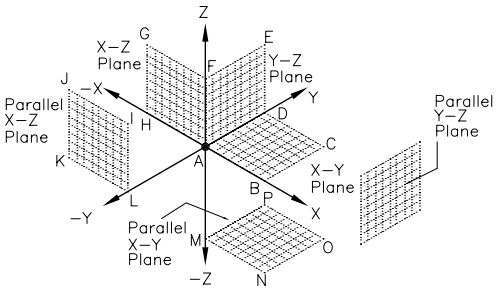

Figure 17-39 *Parallel planes*

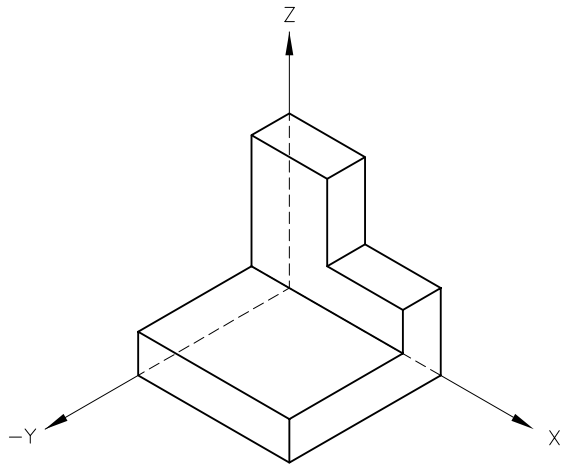

Figure 17-40 *Aligning the object with the X, Y, and Z axes*

Now, you can look at the object from different directions. Looking at the object along the negative *Y* axis and toward the origin is called the front view. Similarly, looking at it from the positive X direction is called the right side view. To get the top view, you can look at the object from the positive *Z* axis, refer to Figure 17-41.

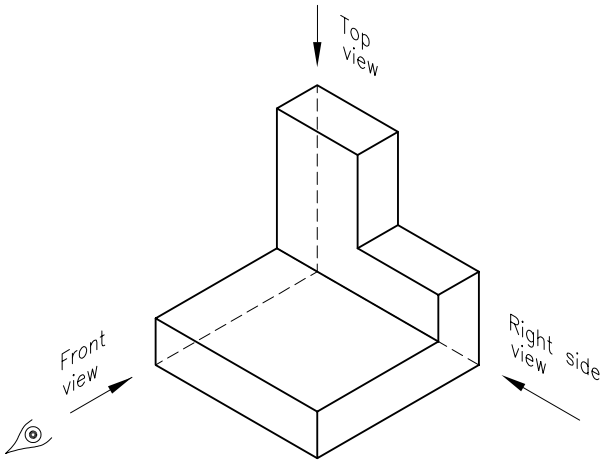

Figure 17-41 *Viewing directions for Front, Side, and Top views*

To draw the front, side, and top views, project the points onto the parallel planes. For example, to draw the front view of the step block, imagine a plane parallel to the *XZ* plane located at a certain distance in front of the object. Now, project the points from the object onto the parallel plane, refer to Figure 17-42, and join them to complete the front view.

Repeat the same process for the side and top views. To represent these views on paper, position them, as shown in Figure 17-43.

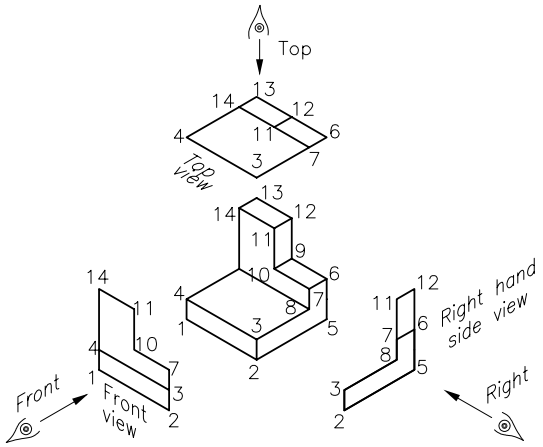

Figure 17-42 *Projecting points onto parallel planes*

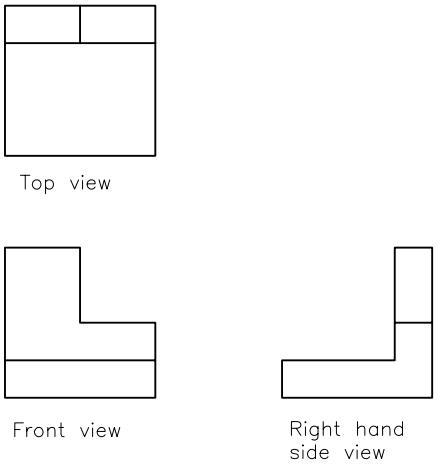

Figure 17-43 *Representing views on paper*

Another way of visualizing different views is to imagine the object enclosed in a glass box, refer to Figure 17-44.

Now, look at the object along the negative *Y* axis and draw the front view on the front glass panel. Repeat the process by looking along the positive *X* and *Z* axes, and draw the views on the right side and the top panel of the box, refer to Figure 17-45.

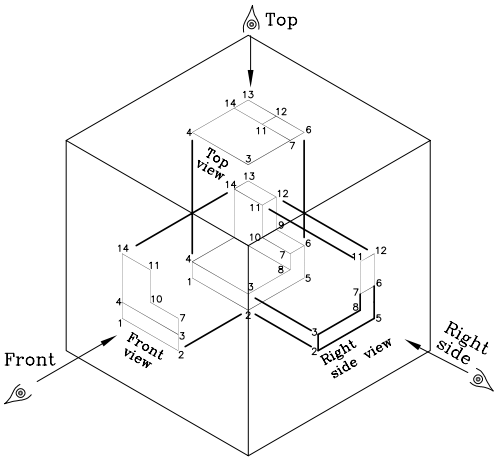

Figure 17-44 *Objects inside a glass box*

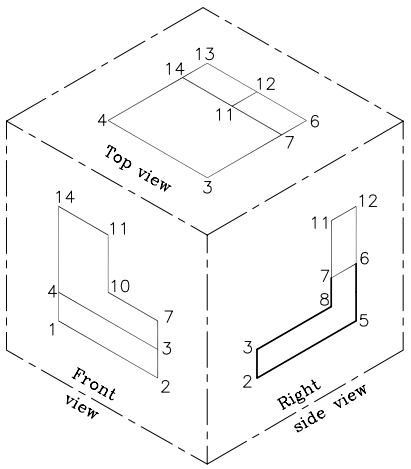

Figure 17-45 *Front, top, and side views*

To represent the front, side, and top views on paper, open the side and the top panels of the glass box, refer to Figure 17-46. The front panel is assumed to be stationary.

After opening the panels through 90 degree, the orthographic views will appear, as shown in Figure 17-47.

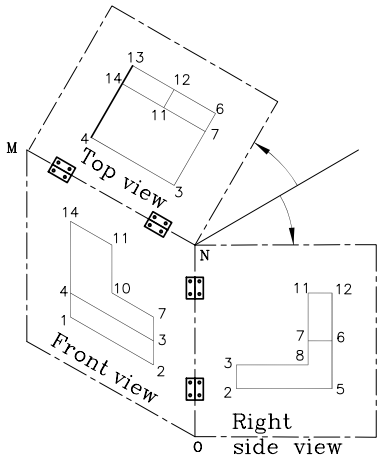

Figure 17-46 *Opening the side and top panels*

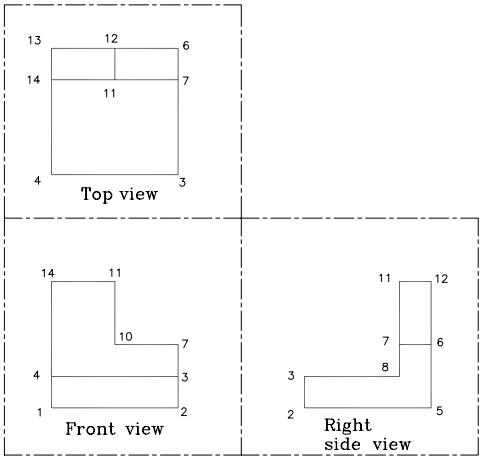

Figure 17-47 *Views after opening the panels*

POSITIONING ORTHOGRAPHIC VIEWS

Orthographic views must be positioned, as shown in Figure 17-48. The right side view must be positioned directly on the right side of the front view. Similarly, the top view must be directly above the front view. If the object requires additional views, they must be positioned, as shown in Figure 17-49.

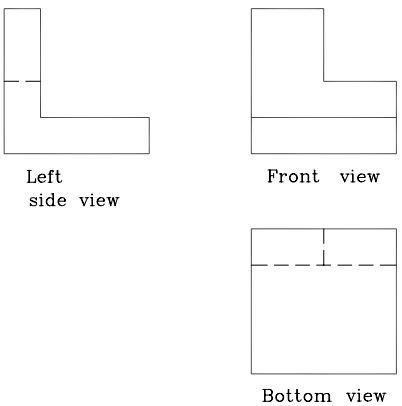

Figure 17-48 *Positioning orthographic views*

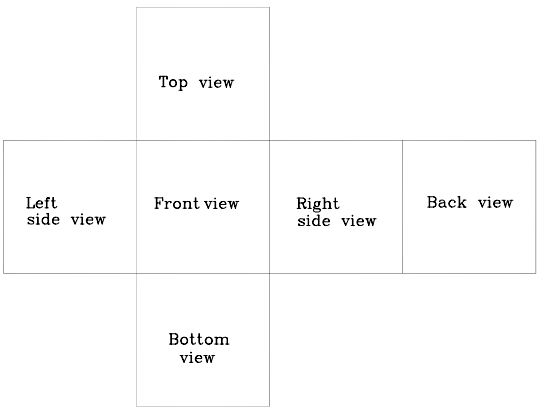

Figure 17-49 *Standard placement of orthographic views*

The different views of the step block are shown in Figure 17-50.

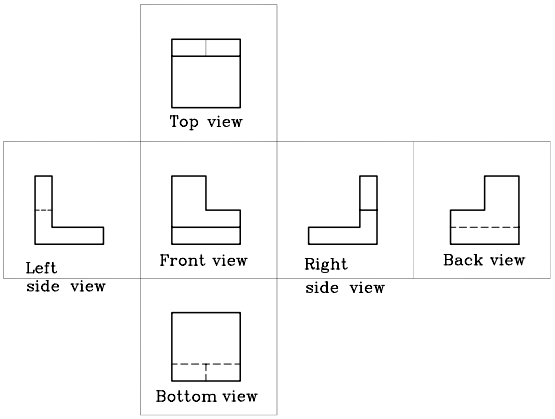

Figure 17-50 *Different views of the step block*

Example 1 — *Orthographic Views*

In this example, you will draw the required orthographic views of the object shown in Figure 17-51. Assume the dimensions of the drawing.

Drawing the orthographic views of an object involves the following steps:

1. Look at the object and determine the number of views required to show all its features. For example, the object in Figure 17-51 requires three views only (front, side, and top).

2. Based on the shape of the object, select the side that you want to show as the front view. In this example, the front view, i.e. the view along -y axis, is the one that shows the maximum number of features or that gives a better idea about the shape of the object. Sometimes, the front view is determined by how the part will be positioned in an assembly.

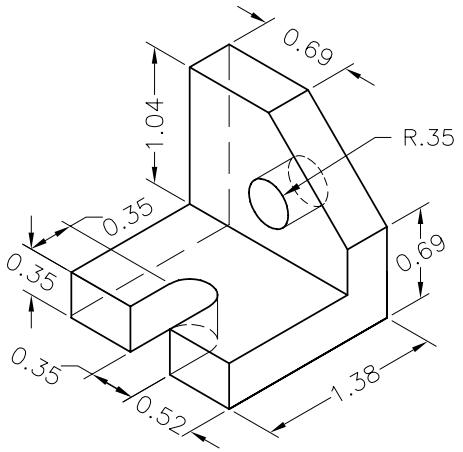

Figure 17-51 *Step block with hole and slot*

3. Picture the object in your mind and align it along the imaginary X, Y, and Z axes, refer to Figure 17-52.

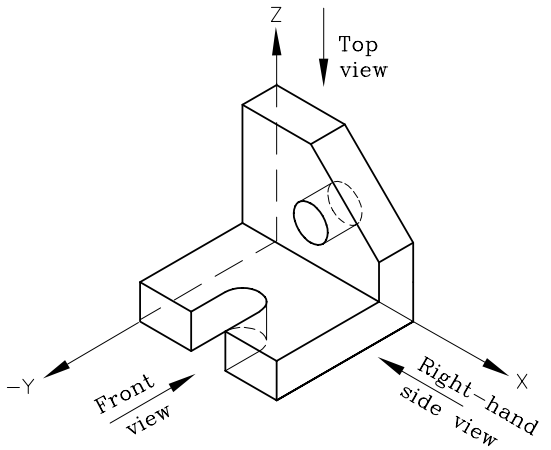

Figure 17-52 *Align the object with the imaginary X, Y, and Z axes*

4. Look at the object along the negative Y axis and project the image on the imaginary XZ parallel plane, refer to Figure 17-53.

5. Use the projection on imaginary XZ parallel plane to draw the front view of the object. If there are any hidden features, they must be drawn with hidden lines. The holes and slots must be shown with center lines.

6. To draw the right side view, look at the object along the positive *X* axis and project the image onto the imaginary YZ parallel plane.

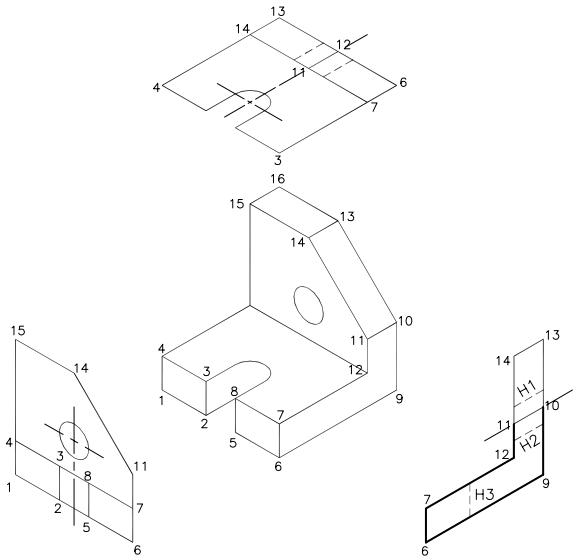

Figure 17-53 *Project the image onto the parallel planes*

7. Use the projection on imaginary YZ parallel plane to draw the right side view of the object. If there are any hidden features, they must be drawn with hidden lines. The holes and slots, when shown in the side view, must have one center line.

8. Similarly, draw the top view to complete the drawing. Figure 17-54 shows different views of the given object.

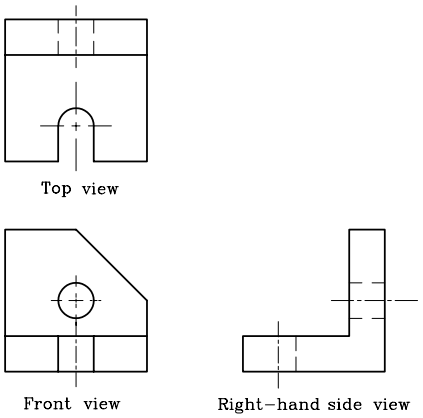

Figure 17-54 *Front, side, and top views*

Exercises 1 through 4 — *Orthographic Views*

Draw the required orthographic views of the objects shown in Figure 17-55 through Figure 17-58. The distance between the dotted lines is 1 unit.

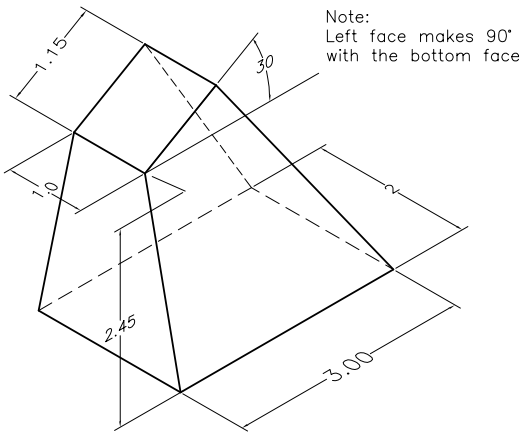

Figure 17-55 *Drawing for Exercise 1 (the object is shown as a surface wireframe model)*

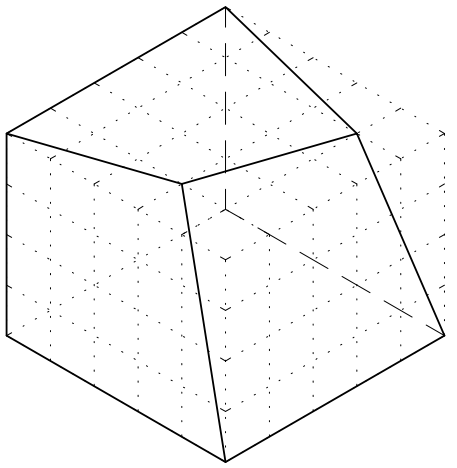

Figure 17-56 *Drawing for Exercise 2*

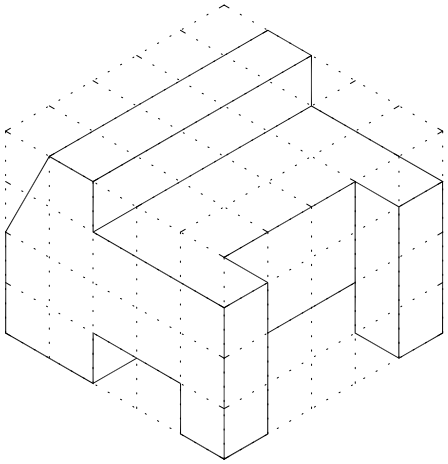

Figure 17-57 *Drawing for Exercise 3*

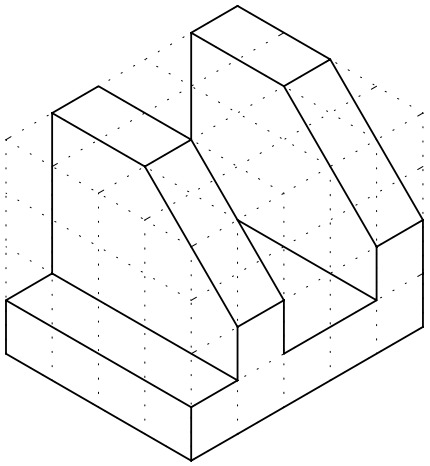

Figure 17-58 *Drawing for Exercise 4*

Exercises 5 through 10 *Orthographic Views*

Draw the required orthographic views of the following objects and then give the required dimensions, refer to Figures 17-59 through 17-64.

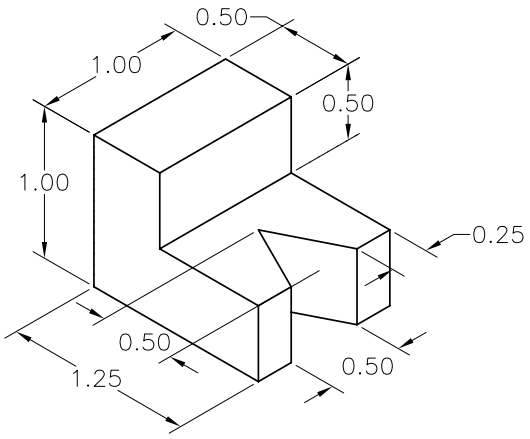

Figure 17-59 *Drawing for Exercise 5*

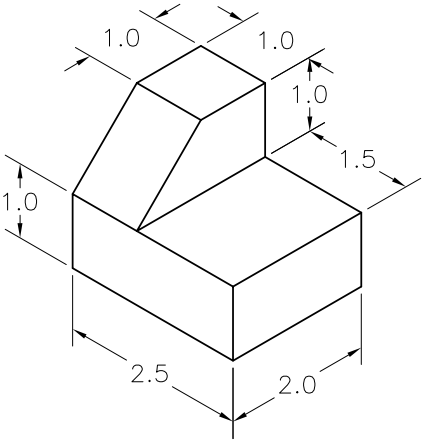

Figure 17-60 *Drawing for Exercise 6*

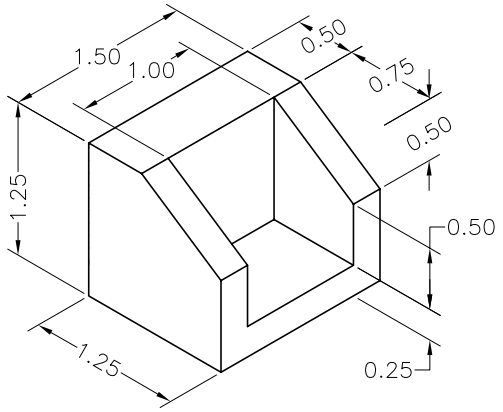

Figure 17-61 *Drawing for Exercise 7*

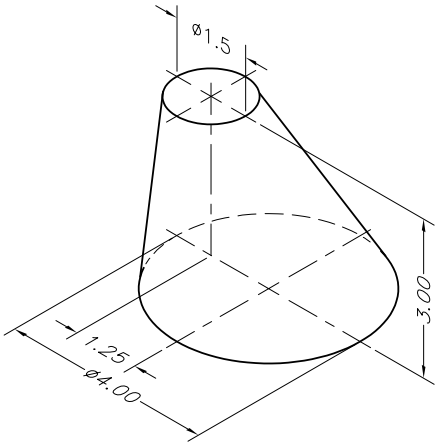

Figure 17-62 *Drawing for Exercise 8*

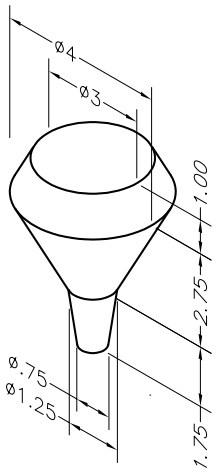

Figure 17-63 *Drawing for Exercise 9*

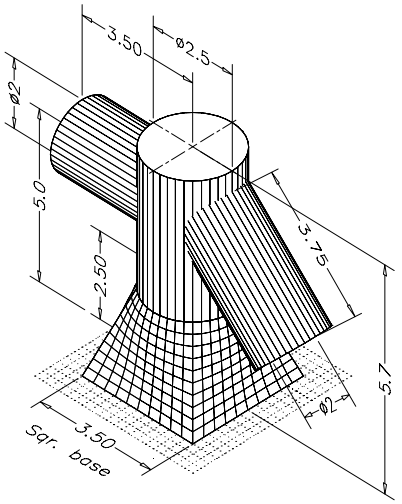

Figure 17-64 *Drawing for Exercise 10 (assume the missing dimensions)*

SECTIONAL VIEWS

In the principal orthographic views, the hidden features are generally shown by hidden lines. In some objects, the hidden lines may not be sufficient to represent the actual shape of the hidden feature. In such situations, sectional views can be used to show the features of the object that are not visible from outside. The location of the section and the direction of sight depend on the shape of the object and the features that need to be shown. Several ways to cut a section in the object are discussed next.

Full Section

Figure 17-65 shows an object that has a drilled counterbore hole with taper. In the orthographic views, these features will be shown by the hidden lines, refer to Figure 17-66.

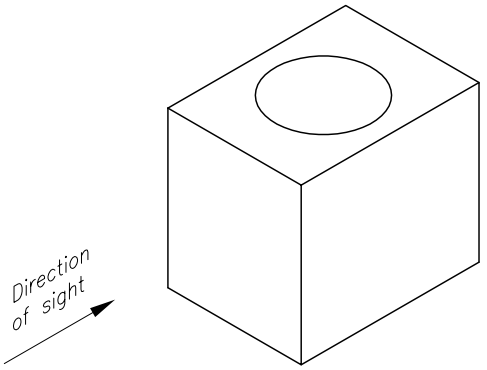

Figure 17-65 *Rectangular object with hole*

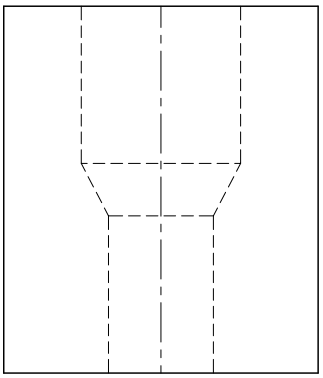

Figure 17-66 *Feature shown with hidden lines*

To better represent the hidden features, the object must be cut so that the hidden features are visible. In the full section, the object is cut along its entire length. To get a better idea of a full section, imagine that the object is cut into two halves along the centerline, as shown in Figure 17-67. Now, remove the left half and look at the right half in the direction that is perpendicular to the sectioned surface. The view you get after cutting the section is called a full section view, refer to Figure 17-68.

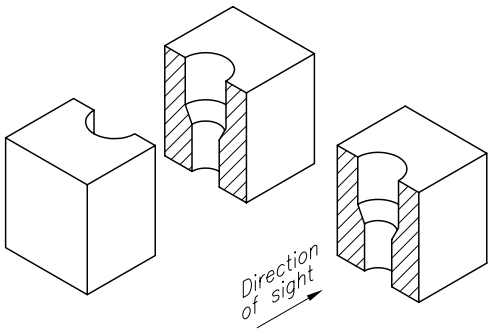

Figure 17-67 *One-half of the object removed*

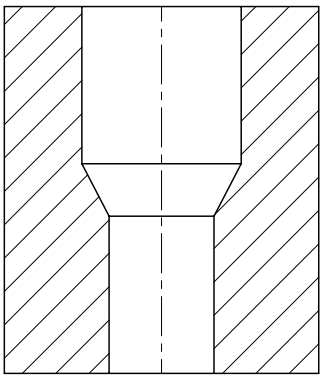

Figure 17-68 *Full section view*

In this section view, the features that would be hidden in a normal orthographic view are visible. Also, the part of the object where the material is actually cut is indicated by section lines. If the material is not cut, the section lines are not drawn. For example, if there is a hole, no material is cut when the part is sectioned, and so the section lines must not be drawn through that area of the section view.

Half Section

If the object is symmetrical, it is not necessary to draw a full section view. For example, in Figure 17-69, the object is symmetrical with respect to the centerline of the hole, so a full section

is not required. But, in some objects it may help to understand and visualize the shape of the hidden details better to draw the view in half section. In half section, one-quarter of the object is removed, as shown in Figure 17-70. To draw a view in half section, imagine one-quarter of the object removed, and then look in the direction that is perpendicular to the sectioned surface.

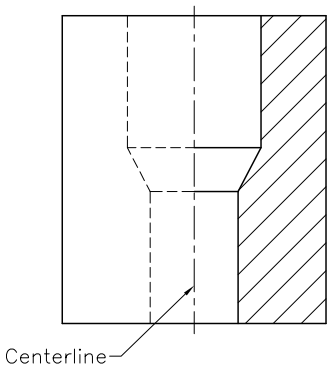

Figure 17-69 *Front view in half section*

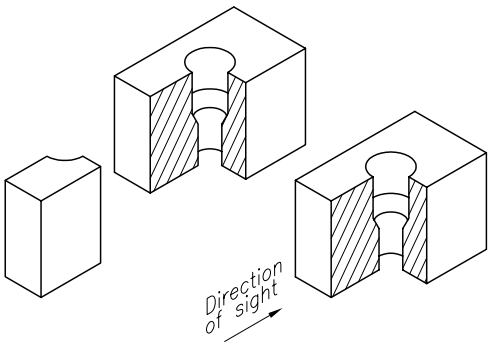

Figure 17-70 *One-quarter of the object removed*

You can also show the front view with a solid line in the middle, as shown in Figure 17-71. Sometimes the hidden lines, representing the remaining part of the hidden feature, are not drawn, refer to Figure 17-72.

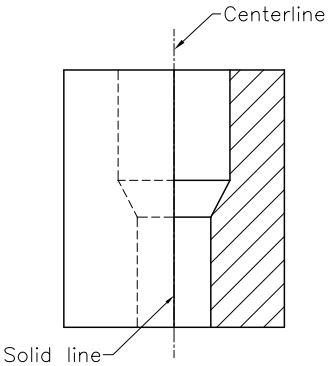

Figure 17-71 *Front view in half section*

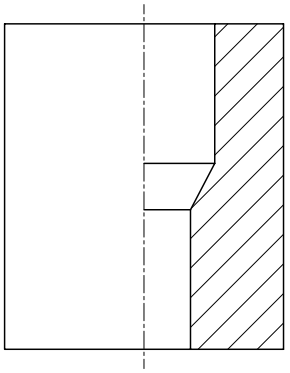

Figure 17-72 *Front view in half section with the hidden features not drawn*

Broken Section

In the broken section, only a small portion of the object is cut to expose the features that need to be drawn in the section. The broken section is designated by drawing a thick line in the section view, refer to Figure 17-73.

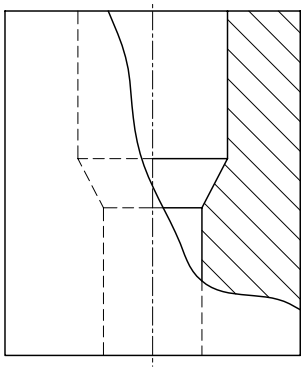

Figure 17-73 *Front view with broken section*

Revolved Section

The revolved section is used to show the true shape of the object at the point where the section is cut. The revolved section is used when it is not possible to show the features clearly in any principal view. For example, for the object shown in Figure 17-74, it is not possible to show the actual shape of the middle section in the front, side, or top view. Therefore, a revolved section is required to show the shape of the middle section.

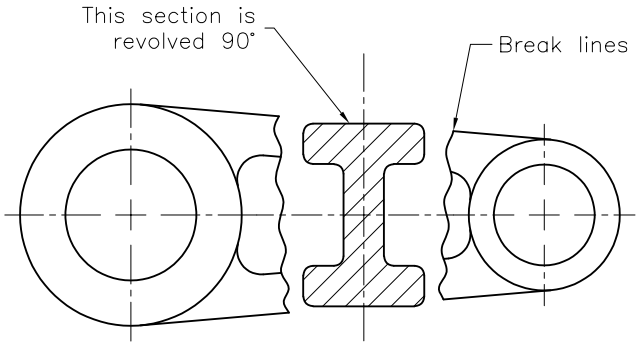

Figure 17-74 *Front view with the revolved section*

The revolved section involves cutting an imaginary section through the object and then looking at the sectioned surface in a direction that is perpendicular to it. To represent the shape, the view is revolved through 90 degrees and drawn in the plane of the paper, as shown in Figure 17-75. Depending on the shape of the object, and for clarity, it is recommended to provide a break in the object so that its lines do not interfere with the revolved section.

Removed Section

The removed section is similar to the revolved section, except that it is shown outside the object. The removed section is recommended when there is not enough space in the view to show it or if the scale of the section is different from the parent object. The removed section can be shown by drawing a line through the object at the point where the revolved section is required and then drawing the shape of the section, as shown in Figure 17-75.

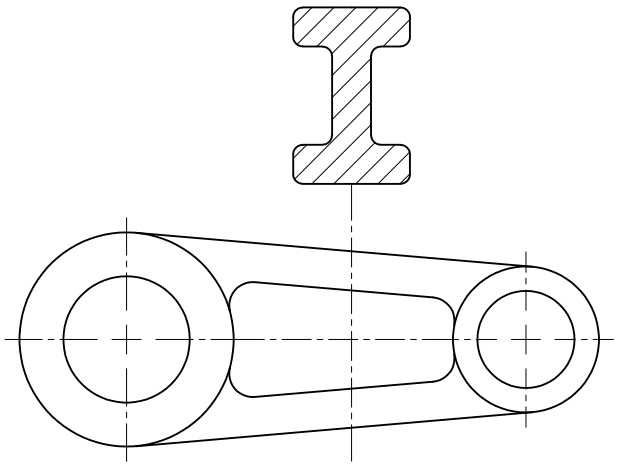

Figure 17-75 *Front view with the removed section*

The other way of showing a removed section is to draw a cutting plane line through the object where you want to cut the section. The arrows should point in the direction, in which you are looking at the sectioned surface. The section can then be drawn at a convenient place in the drawing. The removed section must be labeled, as shown in Figure 17-76. If the scale has been changed, it must be mentioned with the view description.

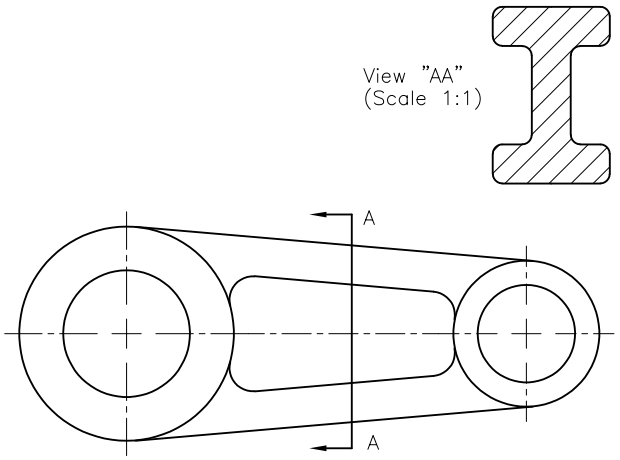

Figure 17-76 *Front view with the removed section drawn at a convenient place*

Offset Section

The offset section is used when the features of the object that you want to section are not in one plane. The offset section is designated by drawing a cutting plane line that is offset through the center of the features that need to be shown in the section, refer to Figure 17-77. The arrows indicate the direction in which the section is viewed.

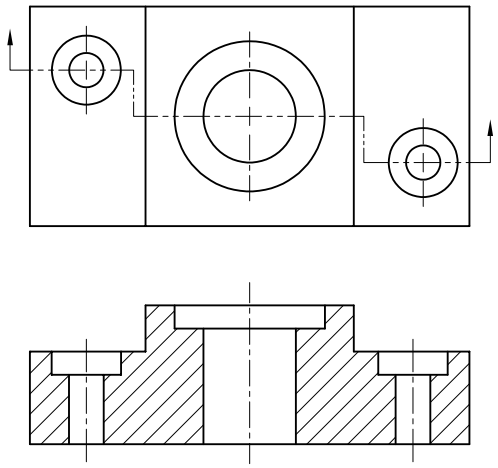

Figure 17-77 *Front view with offset section*

Aligned Section

In some objects, cutting a straight section might cause confusion in visualizing the shape of the section. Therefore, the aligned section is used to represent the shape along the cutting plane, refer to Figure 17-78. Such sections are widely used in circular objects that have spokes, ribs, or holes.

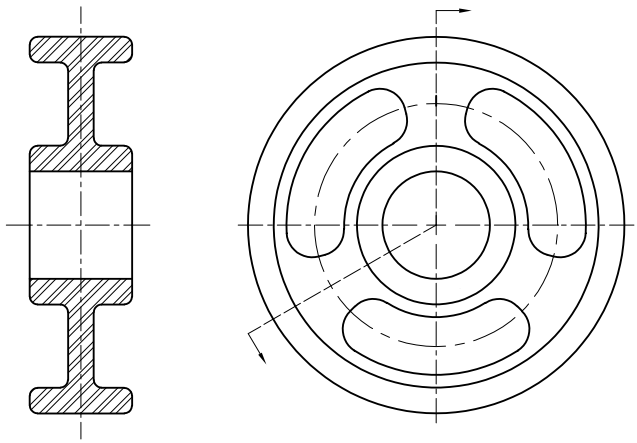

Figure 17-78 *Side view in section (aligned section)*

Cutting Plane Lines

Cutting plane lines are thicker than object lines, refer to Figure 17-79. You can use the **Polyline** tool to draw the polylines of the desired width, generally 0.005 to 0.01. However, for drawings that need to be plotted, you should assign a unique color to the cutting plane lines and then assign that color to the slot of the plotter that carries a pen of the required tip width.

In the industry, generally three types of lines are used to show the cutting plane for sectioning. The first line consists of a series of dashes 0.25 units long. The second type consists of a series of long dashes separated by two short dashes, refer to Figure 17-80. The length of the long dash can

vary from 0.75 to 1.5 units, and the short dashes are about 0.12 units long. The space between the dashes should be about 0.03 units. Third, sometimes the cutting plane lines might clutter the drawing or cause confusion with other lines in the drawing. To avoid this problem, you can show the cutting plane by drawing a short line at the end of the section, refer to Figure 17-80 and Figure 17-81. The line should be about 0.5 units long.

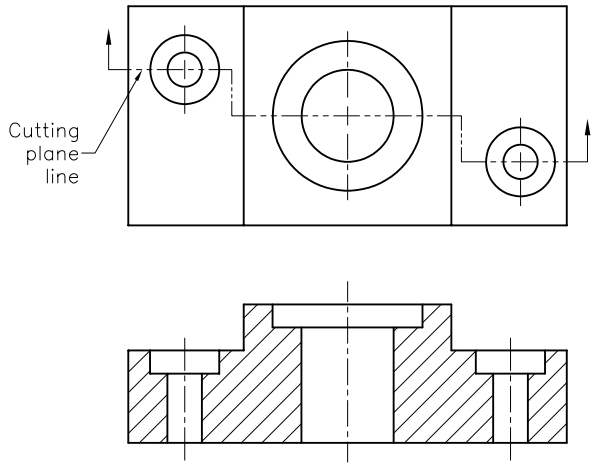

Figure 17-79 *Cutting plane lines*

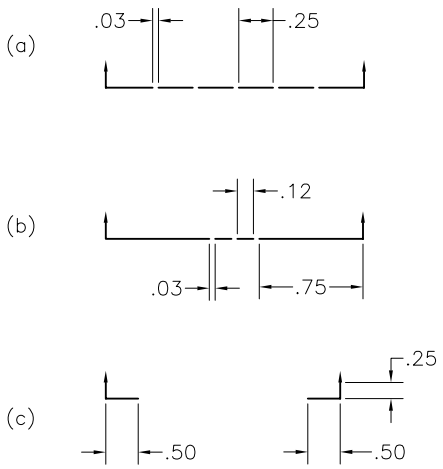

Figure 17-80 *Cutting plane lines*

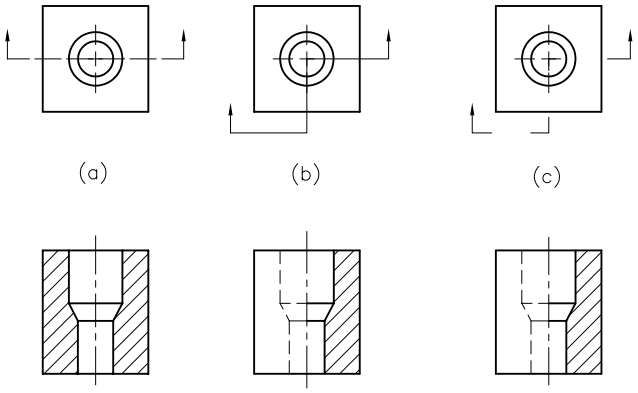

Figure 17-81 *Application of cutting plane lines*



Note

In AutoCAD, you can define a new linetype that you can use to draw the cutting plane lines. Refer to Chapter 11 (Creating Linetypes and Hatch Patterns) for more information on defining linetypes. Add the following lines to the ***Aclt.lin*** *file, and then load the linetypes before assigning it to an object or a layer.*

```
*CPLANE1,___ ___ ___ ___
  A,0.25,-0.03
  *CPLANE2,___ ___ ___ ___
  A,1.0,-0.03,0.12,-0.03,0.12,-0.03
```

Spacing for Hatch Lines

The spacing between the hatch (section) lines is determined by the space that is being hatched, refer to Figure 17-82. If the hatch area is small, the spacing between the hatch lines should be smaller compared to a large hatch area.

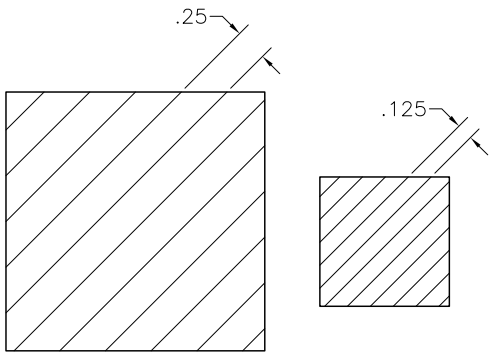

Figure 17-82 *Hatch line spacing*

In AutoCAD, you can control the spacing between the hatch lines by specifying the scale factor at the time of hatching. If the scale factor is 1, the spacing between the hatch lines is the same as defined in the hatch pattern file for that particular hatch. For example, in the following hatch pattern definition, the distance between the lines is 0.125.

***ANSI31, ANSI Iron, Brick, Stone masonry**
45, 0, 0, 0, .125

When the hatch scale factor is 1, the line spacing will be 0.125; if the scale factor is 2, the spacing between the lines will be 0.125 x 2 = 0.25.

Direction of Hatch Lines

The angle for the hatch lines should be 45 degrees. However, if there are two or more hatch areas next to one another representing different parts, the hatch angle must be changed so that the hatched areas look different, refer to Figure 17-83.

Also, if the hatch lines fall parallel to any edge of the hatch area, the hatch angle should be changed so that the lines are not parallel or perpendicular to any object line, refer to Figure 17-84.

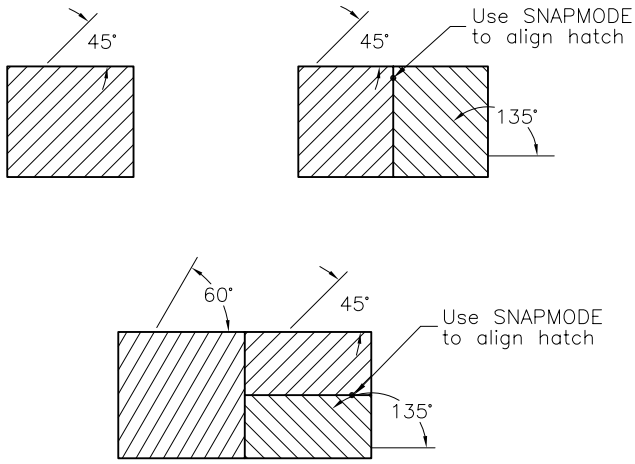

Figure 17-83 *Hatch angle for adjacent parts*

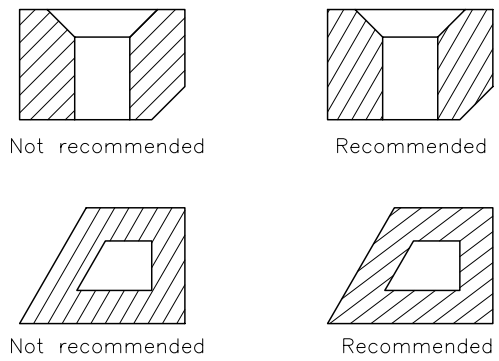

Figure 17-84 *Hatch angle*

Points to Remember

1. Some parts, such as bolts, nuts, shafts, ball bearings, fasteners, ribs, spokes, keys, and other similar items, if sectioned, should not be shown in the section. In case of ribs, if the cutting plane passes through the center plane of the feature, they should not be section-lined. If the cutting plane passes crosswise through ribs, they must be section-lined.

2. Hidden details should not be shown in the section view unless the hidden lines represent an important detail or help the viewer to understand the shape of the object.

3. The section lines (hatch lines) must be thinner than the object lines. You can accomplish this by assigning a unique color to the hatch lines and then assigning the color to that slot on the plotter that carries a pen with a thinner tip.

4. The section lines must be drawn on a separate layer for display and editing purposes.

Exercises 11 and 12 *Section Views*

In the following drawings, refer to Figures 17-85 and 17-86, the views have been drawn without a section. Draw these views in the section as indicated by the cutting plane lines in each object.

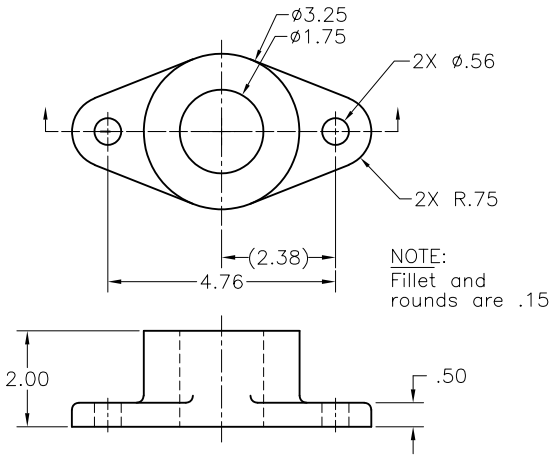

Figure 17-85 *Drawing for Exercise 11*

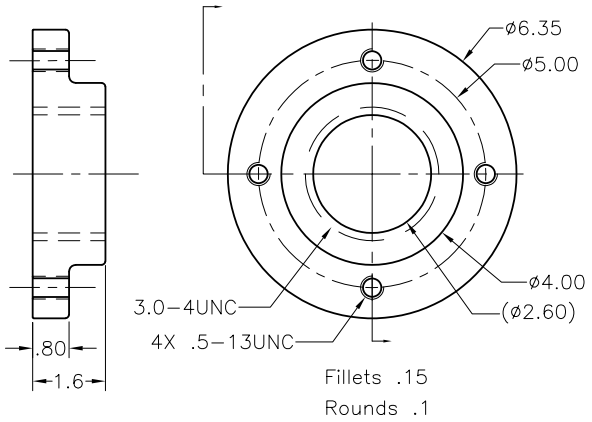

Figure 17-86 *Drawing for Exercise 12*

Exercises 13 and 14 — *Section Views*

Draw the orthographic views of the objects shown in Figures 17-87 and 17-88. The required view should be the front section view of the object such that the cutting plane passes through the holes. Also, draw the cutting plane lines in the top view.

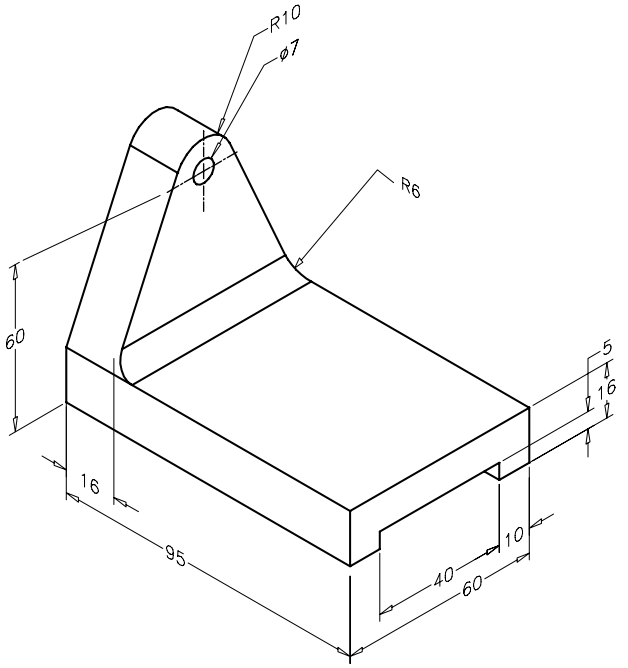

Figure 17-87 *Drawing for Exercise 13*

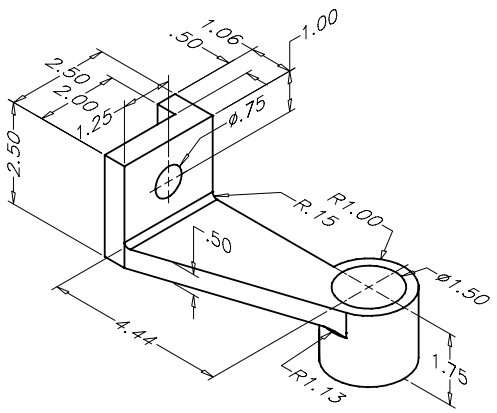

Figure 17-88 *Drawing for Exercise 14*

Exercise 15 — Section View

Draw the required orthographic views of the object shown in Figures 17-89 and 17-90 with the front view in the section. Also, draw the cutting plane lines in the top view to show the cutting plane. The material thickness is 0.25 units. (The object has been drawn as a surfaced 3D wiremesh model.)

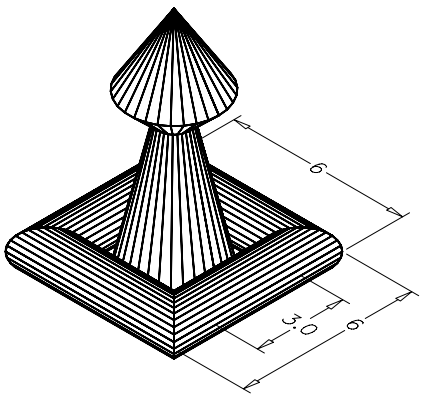

Figure 17-89 *Isometric view of the model*

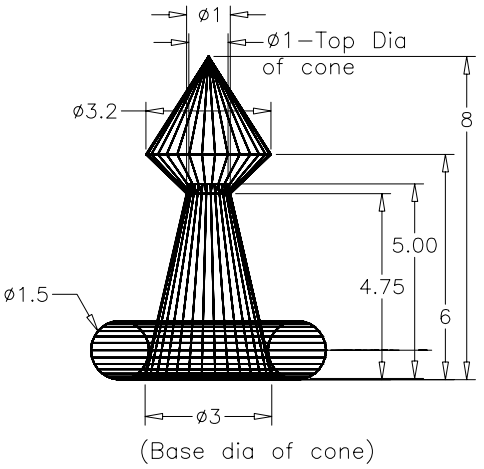

Figure 17-90 *Front view of the model*

AUXILIARY VIEWS

As discussed earlier, most objects generally require three principal views (front view, side view, and top view) to show all features of the object. Round objects may require just two views. Some objects have inclined surfaces. It may not be possible to show the actual shape of the inclined surface in one of the principal views. To get the true view of the inclined surface, you must look at the surface in a direction that is perpendicular to the inclined surface. Then you can project the points onto the imaginary auxiliary plane that is parallel to the inclined surface. The final view after projecting the points is called the auxiliary view, as shown in Figures 17-91 and 17-92.

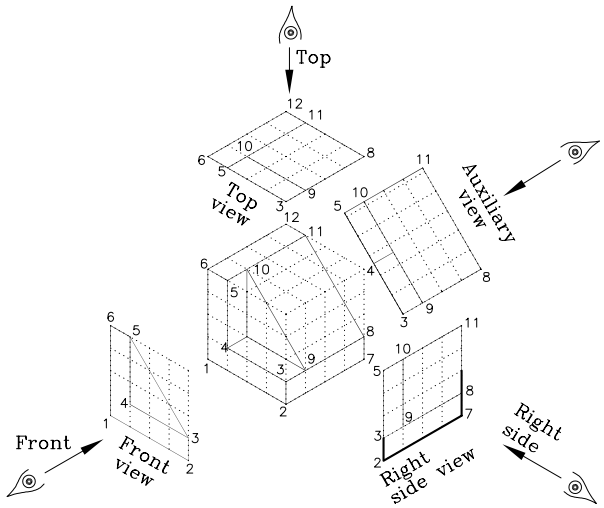

Figure 17-91 *Points projected on the auxiliary plane*

The auxiliary view in Figure 17-92 shows all the features of the object as seen from the auxiliary view direction. For example, the bottom left edge is shown as a hidden line. Similarly, the lower right and upper left edges are shown as continuous lines. Although these lines are technically correct, the purpose of the auxiliary view is to show the features of the inclined surface. Therefore, in the auxiliary plane, you should draw only those features that are on the inclined face, as shown in Figure 17-93. Other details that will help you to understand the shape of the object may also be included in the auxiliary view. The remaining lines should be ignored because they tend to cause confusion in visualizing the shape of the object.

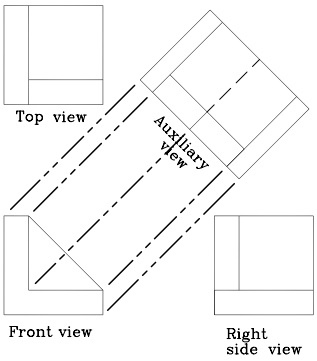

Figure 17-92 *Auxiliary, front, and side views*

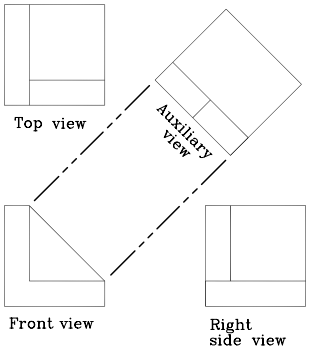

Figure 17-93 *Features on the inclined plane in an auxiliary view*

How to Draw Auxiliary Views

The following example illustrates how to use AutoCAD to generate an auxiliary view.

Draw the required views of the hollow triangular block that has a hole in the inclined face, as shown in Figure 17-94. (The block has been drawn as a solid model.)

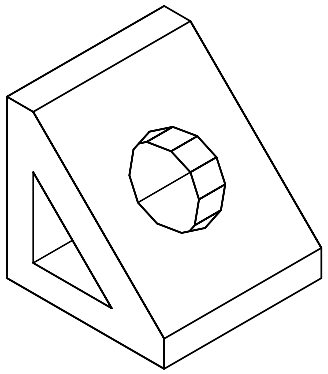

Figure 17-94 *Hollow triangular block*

The following steps are involved in drawing different views of this object.

1. Draw the required orthographic views: the front view, side view, and the top view as shown in Figure 17-95. The circles on the inclined surface appear like ellipses in the front and top views. These ellipses may not be shown in the orthographic views because they tend to clutter them, refer to Figure 17-96.

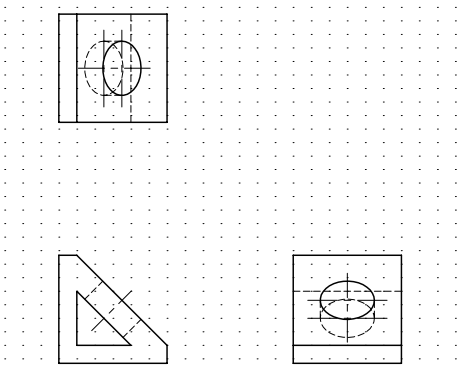

Figure 17-95 *Front, side, and top views*

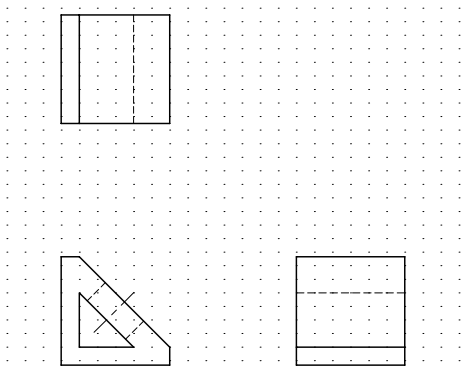

Figure 17-96 *The ellipses are not visible in the orthographic views*

2. Determine the angle of the inclined surface. In this example, the angle is 45 degrees. Use the **SNAP** command to rotate the snap by 45 degrees, refer to Figure 17-97 or rotate the UCS by 45 degrees around the *Z* axis.

Command: **SNAP** Enter
Specify snap spacing or [ON/OFF/Aspect/Style/Type] <0.5000>: **R** Enter
Specify base point <0.0000,0.0000>: *Select P1.*
Specify rotation angle <0>: **45** Enter

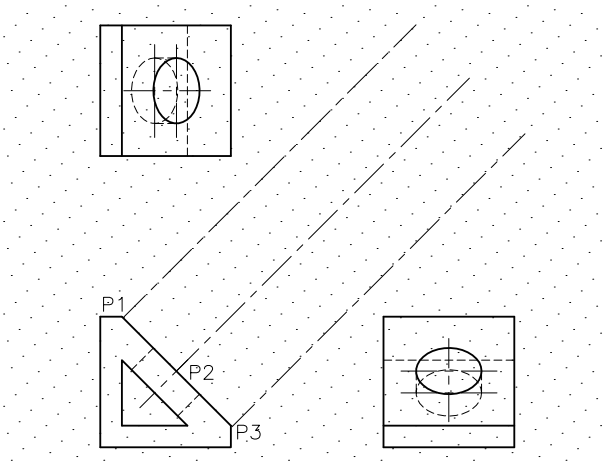

Figure 17-97 *Grid lines at 45-degree*

Using the rotate option, the snap will be rotated by 45 degrees and the grid lines will also be displayed at 45 degrees (if the **GRID** is on). Also, one of the grid lines will pass through point P1 because it was defined as the base point.

3. Turn **ORTHO** on, and project points P1, P2, and P3 from the front view onto the auxiliary plane. Now, you can complete the auxiliary view and give the dimensions. The projection lines can be erased after the auxiliary view is drawn, refer to Figure 17-98.

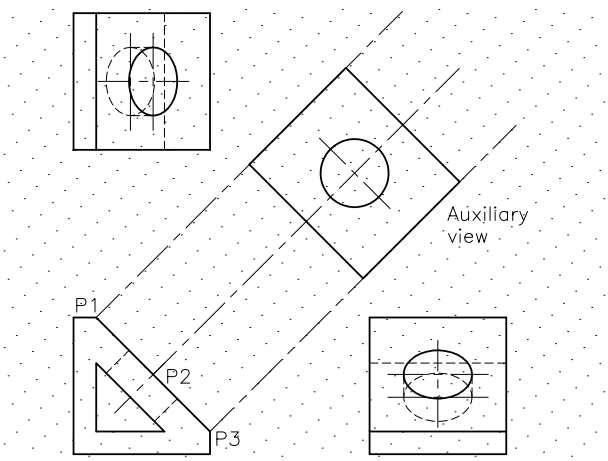

Figure 17-98 *Auxiliary, front, side, and top views*

Exercise 16 *Orthographic Views*

Draw the orthographic and auxiliary views of the object shown in Figure 17-99. The object is drawn as a surfaced 3D wiremesh model.

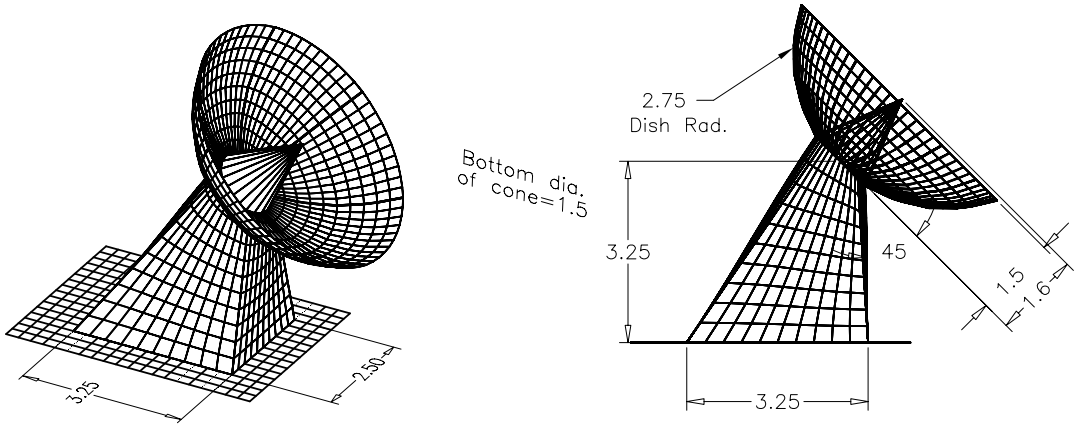

Figure 17-99 *Dimensions for the mesh model*

Exercises 17 and 18 *Orthographic Views*

Draw the orthographic and auxiliary views of the objects shown in Figure 17-100 and Figure 17-101. The objects are drawn as 3D solid models and are shown at different angles (viewpoints are different).

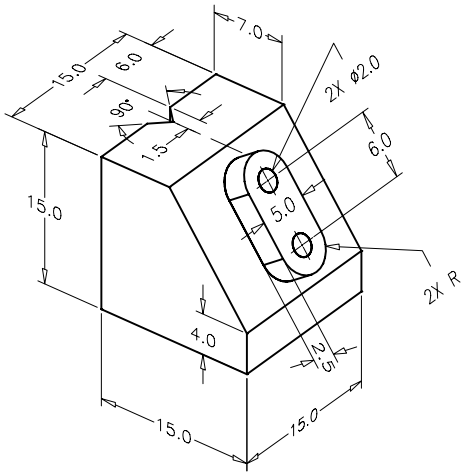

Figure 17-100 *Drawing for Exercise 17*

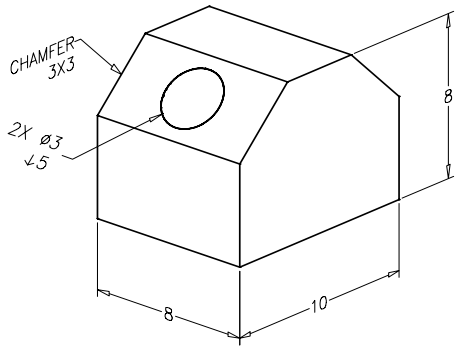

Figure 17-101 *Drawing for Exercise 18*

Self-Evaluation Test

Answer the following questions and then compare them to those given at the end of this chapter:

1. A line perpendicular to the *X* and *Y* axes defines the _____ axis.

2. The circle must be dimensioned as a _____ never as a radius.

3. If you give continuous (incremental) dimensioning for dimensioning various features of a part, the overall dimension must be omitted or given as a _____ dimension.

4. The removed section is similar to the _____section except that it is shown outside the object.

5. In AutoCAD, you can control the spacing between the hatch lines by specifying the _____ at the time of hatching.

6. The distance between the first dimension line and the second dimension line must be _____ to _____units.

7. The reference dimension must be enclosed in _____.

8. The front view shows the maximum number of features or gives a better idea about the shape of the object. (T/F)

9. The number of decimal places in a dimension (for example, 2.000) determines the type of machine that will be used for performing the machining operation. (T/F)

10. The dimension layer/layers should be assigned a unique color so that at the time of plotting you can assign a desired pen to plot the dimensions. (T/F)

11. All dimensions should be placed inside the view. (T/F)

12. The dimensions can be placed inside the view if they can be easily understood and cause no confusion with the other object lines. (T/F)

13. If the given object is symmetrical, it is not necessary to draw a full section view. (T/F)

14. While dimensioning, you must consider the manufacturing process involved in making a part and the relationship that exists between different parts in an assembly. (T/F)

15. A dimension must be assigned where the feature is visible. However, in some complicated drawings, you might be justified to dimension a detail with a hidden line. (T/F)

Review Questions

Answer the following questions:

1. Multiview drawings are also known as _____ drawings.

2. The distance of the first dimension line should be _____ to _____ units from the object line.

3. For parallel dimension lines, the dimension text can be _____ if there is not enough room between the dimension lines to place the dimension text.

4. While dimensioning a circle, the diameter should be preceded by the _____.

5. While dimensioning an arc or a circle, the dimension line (leader) must be _____.

6. A bolt circle should be dimensioned by specifying the _____of the bolt circle, the_____ of the holes, and the _____ of the holes in the bolt circle.

7. In the _____ section, the object is cut along the entire length.

8. The part of the object where the material is actually cut is indicated by drawing _____ lines.

9. The _____ section is used to show the true shape of the object at the point where the section is cut.

10. The _____section is used when the features of the object that you want to section are not in one plane.

11. The section lines must be drawn on a separate layer for _____ and _____purposes.

12. In a broken section, only a _____ of the object is cut to _____ the features that need to be drawn in section.

13. The assembly drawing is used to show the _____ and their _____ in an assembled product or a machine unit.

14. The space between the *X* and *Y* axes is called the *XY* plane. (T/F)

15. A plane that is parallel to the *XY* plane is called a parallel plane. (T/F)

16. If you look at the object along the negative *Y* axis and toward the origin, you will get the side view. (T/F)

17. The top view must be directly below the front view. (T/F)

18. Before drawing orthographic views, you must look at the object and determine the number of views required to show all features of the object. (T/F)

19. By dimensioning, you not only modify the size of a part, but also give a series of instructions to a machinist, an engineer, or an architect. (T/F)

20. You can change grid, snap or UCS origin, and snap increments to make it easier to place the dimensions. (T/F)

21. You should not dimension with hidden lines. (T/F)

22. A dimension that is not to be scaled should be indicated by drawing a straight line under the dimension text. (T/F)

23. Dimensions must be given where the feature that you are dimensioning is obvious and shows the contour of the feature. (T/F)

24. In radial dimensioning, you should place the dimension text vertically. (T/F)

25. If the dimension of a feature appears in a section view, you must hatch the dimension text. (T/F)

26. Dimensions must not be repeated as it makes their updation difficult. (T/F)

27. Cutting plane lines are thinner than object lines. You can use the **Polyline** tool to draw the polylines of the desired width. (T/F)

28. The spacing between the hatch (section) lines is determined by the space being hatched. (T/F)

29. The angle for the hatch lines should be 45-degree. However, if there are two or more hatch areas next to one another representing different parts, the hatch angle must be changed so that the hatched areas look different. (T/F)

30. Some parts, such as bolts, nuts, shafts, ball bearings, fasteners, ribs, spokes, keys, and other similar items that do not show any important feature, if sectioned, must be shown in section. (T/F)

31. Section lines (hatch lines) must be thicker than object lines. (T/F)

Exercises 19 through 24

Draw the required orthographic views of the following objects (the isometric view of each object is given in Figures 17-102 through 17-107. The dimensions can be determined by counting the number of grid lines. The distance between the isometric grid lines is assumed to be 0.5 units. Also, dimension the drawings.

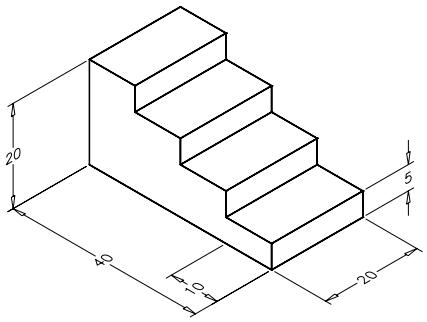

Figure 17-102 *Drawing for Exercise 19*

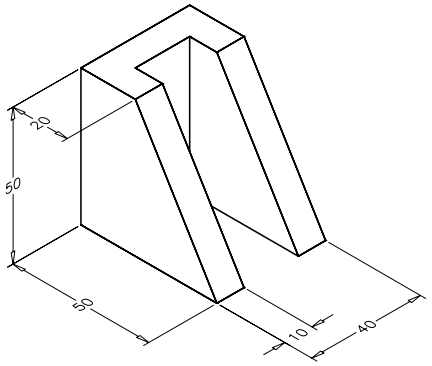

Figure 17-103 *Drawing for Exercise 20*

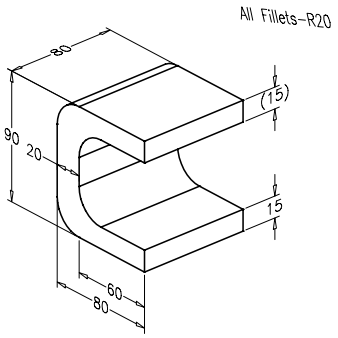

Figure 17-104 *Drawing for Exercise 21*

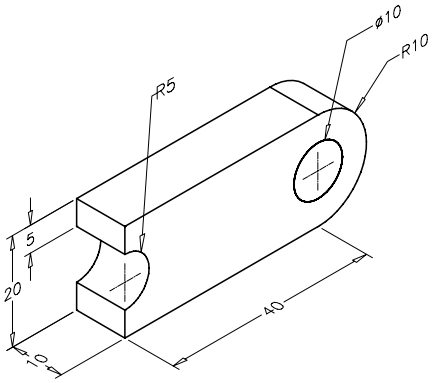

Figure 17-105 *Drawing for Exercise 22*

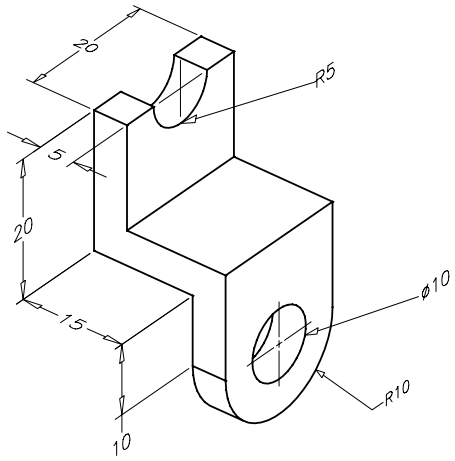

Figure 17-106 *Drawing for Exercise 23*

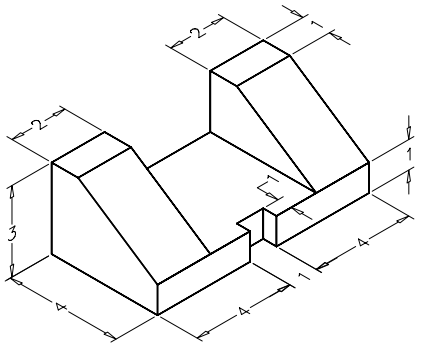

Figure 17-107 *Drawing for Exercise 24*

Answers to Self-Evaluation Test

1. Z, **2.** diameter, **3.** reference, **4.** revolved, **5.** scale factor, **6.** 0.25, 0.5, **7.** parentheses, **8.** T, **9.** T, **10.** T, **11.** F, **12.** T, **13.** T, **14.** T, **15.** T