Table of Contents

Dedication iii
Preface xix

Chapter 1: Introduction to CATIA V5-6R2023

Introduction to CATIA V5-6R2023 1-2
CATIA V5 Workbenches 1-2
System Requirements 1-4
Getting Started with CATIA V5-6R2023 1-4
Important Terms and Definitions 1-5
Understanding the Functions of the Mouse Buttons in CATIA 1-11
Toolbars 1-13
Hot Keys 1-27
Color Scheme 1-28
Self-Evaluation Test 1-29
Review Questions 1-30

Chapter 2: Sketching, Dimensioning, and Creating Base Features and Drawings

The Sketcher Workbench 2-2
Starting a New File 2-2
Invoking the Sketcher Workbench 2-5
    Invoking the Sketcher Workbench Using the Sketch Tool 2-5
    Invoking the Sketcher Workbench Using the Positioned Sketch Tool 2-6
Setting the Sketcher Workbench 2-6
    Modifying Units 2-6
    Modifying the Grid Settings 2-7
Understanding Sketcher Terms 2-8
    Specification Tree 2-8
    Grid 2-10
    Snap to Point 2-10
    Construction/Standard Element 2-10
    Select Toolbar 2-10
    Inferencing Lines 2-12
Drawing Sketches Using Sketcher Tools 2-12
    Drawing Lines 2-12
    Drawing Center Lines 2-16
    Drawing Rectangles, Oriented Rectangles, and Parallelograms 2-16
    Creating Points 2-18
    Drawing Circles 2-22
    Drawing Arcs 2-24
    Drawing Profiles 2-26
Drawing Display Tools 2-28
    Fly Mode 2-29
    Fit All In 2-29

Pan 2-29
Zoom In 2-29
Zoom Out 2-30
Zoom Area 2-30
Normal View 2-30
Create Multiview 2-31
Hide/Show Geometric Elements 2-31
Swap Visible Space 2-31
Applying Dimensional Constraints 2-31
Creating Base Features by Extrusion 2-36
Generating Drawing Views 2-38
Tutorial 1 2-38
Tutorial 2 2-44
Tutorial 3 2-50
Tutorial 4 2-56
Self-Evaluation Test 2-62
Review Questions 2-63
Exercise 1 2-64
Exercise 2 2-64
Exercise 3 2-65
Exercise 4 2-65

Chapter 3: Drawing Sketches in the Sketcher Workbench-II

Other Sketching Tools in the Sketcher Workbench 3-2
Drawing Conics 3-2
Drawing Splines 3-6
Connecting Two Elements by a Spline or an Arc 3-6
Drawing Elongated Holes 3-7
Drawing Cylindrical Elongated Holes 3-8
Drawing Keyhole Profiles 3-9
Drawing Polygons 3-9
Drawing Centered Rectangles 3-10
Drawing Centered Parallelograms 3-11
Editing and Modifying Sketches 3-11
Trimming Unwanted Sketched Elements 3-12
Extending Sketched Elements 3-13
Breaking Elements 3-13
Closing Elements 3-14
Trimming by Using the Quick Trim Tool 3-15
Filleting Sketched Elements 3-15
Creating a Tangent Arc 3-16
Chamfering Sketched Elements 3-17
Mirroring Sketched Elements 3-18
Mirroring Elements without Duplication 3-19
Translating Sketched Elements 3-19
Rotating Sketched Elements 3-20
Scaling Sketched Elements 3-21
Offsetting Sketched Elements 3-21

Evaluation Copy. Do not reproduce. For information visit www.cadcim.com

Modifying Sketched Elements 3-22
Deleting Sketched Elements 3-25
Tutorial 1 3-25
Tutorial 2 3-29
Tutorial 3 3-33
Self-Evaluation Test 3-36
Review Questions 3-37
Exercise 1 3-38
Exercise 2 3-38
Exercise 3 3-39
Exercise 4 3-39
Exercise 5 3-40

Chapter 4: Constraining Sketches and Creating Features

Constraining Sketches 4-2
Concept of Constrained Sketches 4-2
Iso-Constrained 4-2
Under-Constrained 4-2
Over-Constrained 4-2
Inconsistent 4-3
Not Changed 4-3
Applying Constraints 4-3
Applying Geometrical Constraints Automatically 4-3
Applying Additional Constraints to the Sketch 4-4
Applying Contact Constraints 4-7
Applying Fix Together Constraints 4-7
Applying Auto Constraints 4-8
Animate Constraint 4-10
Editing Multiple Dimensions 4-10
Analyzing and Deleting Over-Defined Constraints 4-11
Analyzing Sketch using the Sketch Analysis Tool 4-11
Exiting the Sketcher Workbench 4-13
Creating Features by Extrusion 4-13
Creating a Thin Extruded Feature 4-14
Extruding a Sketch Using the Profile Definition Dialog Box 4-16
Extruding the Sketch along a Directional Reference 4-17
Creating Features by Revolving Sketches 4-18
Creating Thin Shaft Features 4-19
Dynamically Rotating View of a Model 4-20
Rotating the View Using the Rotate Tool 4-20
Rotating the View Using the Compass 4-21
Modifying the View Orientation 4-21
Display Modes of the Model 4-23
Shading (SHD) 4-23
Shading with Edges 4-23
Shading with Edges without Smooth Edges 4-23
Shading with Edges and Hidden Edges 4-23
Shading with Material 4-24

Evaluation Copy. Do not reproduce. For information visit www.cadcim.com

Wireframe (NHR) 4-24
Customize View Parameters 4-24
Creating Sections Dynamically 4-24
Maneuvering the Section Plane 4-25
Position of Section Planes 4-25
Assigning Material to a Model 4-26
Tutorial 1 4-28
Tutorial 2 4-34
Self-Evaluation Test 4-41
Review Questions 4-42
Exercise 1 4-43
Exercise 2 4-44
Exercise 3 4-45
Exercise 4 4-46

Chapter 5: Reference Elements and Sketch-Based Features

Importance of Sketching Planes 5-2
Reference Elements 5-3
Reference Planes 5-3
Creating New Planes 5-4
Creating Points 5-8
Creating Reference Lines 5-10
Other Sketch-Based Features 5-11
Creating Drafted Filleted Pad Features 5-11
Creating Multi-Pad Features 5-12
Feature Termination Options 5-13
Creating Pocket Features 5-14
Creating Drafted Filleted Pocket Features 5-16
Creating Multi-Pocket Features 5-16
Creating Groove Features 5-17
Extruding and Revolving Planar and Non-planar Faces 5-17
Projecting 3D Elements 5-18
Tutorial 1 5-19
Tutorial 2 5-23
Tutorial 3 5-27
Tutorial 4 5-33
Tutorial 5 5-38
Self-Evaluation Test 5-41
Review Questions 5-42
Exercise 1 5-42
Exercise 2 5-43
Exercise 3 5-44
Exercise 4 5-45

Chapter 6: Creating Dress-Up and Hole Features

Advanced Modeling Tools 6-2
Creating Hole Features 6-2

Evaluation Copy. Do not reproduce. For information visit www.cadcim.com

Creating Fillet Feature 6-10
Creating Chamfers 6-20
Adding Draft to the Faces of the Model 6-22
Creating Shell Features 6-27
Adding Thickness 6-29
Removing Faces 6-30
Replacing Faces 6-31
Tutorial 1 6-32
Tutorial 2 6-39
Self-Evaluation Test 6-45
Review Questions 6-45
Exercise 1 6-46
Exercise 2 6-48
Exercise 3 6-49

Chapter 7: Editing Features

Editing Features of a Model 7-2
Editing Using the Definition Option 7-2
Editing by Double-Clicking 7-3
Editing the Sketch of a Sketch-Based Feature 7-3
Redefining the Sketch Plane of Sketches 7-3
Deleting Unwanted Features 7-4
Managing Features and Sketches by using the Cut, Copy, and Paste Functions 7-5
Understanding the Concept of Update Diagnosis 7-6
Cut, Copy, and Paste Features and Sketches 7-7
Copying Features Using Drag and Drop 7-7
Cut, Copy, and Paste the Features using Drag and Drop function 7-8
Copying and Pasting PartBodies 7-8
Deactivating Features 7-9
Activating Deactivated Features 7-10
Defining Features in Work Object 7-10
Reordering Features 7-10
Understanding the Parent-Child Relationships 7-12
Measuring Elements 7-12
Measuring between Elements 7-12
Measuring Items 7-14
Measuring Inertia 7-14
Tutorial 1 7-16
Tutorial 2 7-21
Tutorial 3 7-27
Self-Evaluation Test 7-31
Review Questions 7-32
Exercise 1 7-33
Exercise 2 7-34
Exercise 3 7-35

Evaluation Copy. Do not reproduce. For information visit www.cadcim.com

Chapter 8: Transformation Features and Advanced Modeling Tools-I

Transformation Features 8-2
Translating the Bodies 8-2
Rotating the Bodies 8-4
Creating the Symmetry Features 8-5
Transforming the Axis System 8-5
Mirroring the Features and Bodies 8-6
Creating Rectangular Patterns 8-8
Creating Circular Patterns 8-13
Creating User Patterns 8-16
Uniform Scaling of Models 8-17
Non-uniform Scaling of Models 8-18
Working with Additional Bodies 8-19
Inserting a New Body 8-19
Inserting Features in the New Body 8-19
Applying Boolean Operations to Bodies 8-20
Adding Stiffeners to a Model 8-25
Generating Solid Combine 8-27
Tutorial 1 8-28
Tutorial 2 8-34
Tutorial 3 8-39
Self-Evaluation Test 8-45
Review Questions 8-46
Exercise 1 8-47
Exercise 2 8-48
Exercise 3 8-49

Chapter 9: Advanced Modeling Tools-II

Advanced Modeling Tools 9-2
Creating Rib Features 9-2
Creating Slot Features 9-7
Creating Multi-Sections Solid Features 9-8
Creating the Multi-Section Solid Cut Feature 9-16
Tutorial 1 9-17
Tutorial 2 9-22
Tutorial 3 9-28
Tutorial 4 9-33
Self-Evaluation Test 9-36
Review Questions 9-37
Exercise 1 9-38
Exercise 2 9-39

Chapter 10: Working with the Wireframe and Surface Design Workbench

Need of Surface Modeling 10-2
Wireframe and Surface Design Workbench 10-2
Starting the Wireframe and Surface Design Workbench 10-2
Creating Wireframe Elements 10-2

Evaluation Copy. Do not reproduce. For information visit www.cadcim.com

Creating Circles 10-2
Creating Splines 10-3
Creating a Helix 10-4
Creating Surfaces 10-7
Creating Extruded Surfaces 10-7
Creating Revolved Surfaces 10-8
Creating Spherical Surfaces 10-9
Creating Cylindrical Surfaces 10-9
Creating Offset Surfaces 10-10
Creating Sweep Surfaces 10-11
Creating Fill Surfaces 10-24
Creating Multi-Section Surfaces 10-27
Creating Blended Surfaces 10-28
Operations on Shape Geometry 10-29
Joining Surfaces 10-29
Splitting Surfaces 10-30
Trimming Surfaces 10-31
Tutorial 1 10-32
Tutorial 2 10-39
Self-Evaluation Test 10-48
Review Questions 10-49
Exercise 1 10-50
Exercise 2 10-51

Chapter 11: Editing and Modifying Surfaces

Surface Operations 11-2
Creating Projection Curves 11-2
Creating Intersection Elements 11-3
Healing Geometries 11-5
Disassembling Elements 11-8
Untrimming a Surface or a Curve 11-8
Creating Boundary Curves 11-9
Extracting Geometry 11-11
Transformation 11-11
Extrapolating Surfaces and Curves 11-18
Splitting a Solid Body with a Surface 11-20
Solidifying Surface Models 11-21
Adding Thickness to a Surface 11-22
Creating a Solid Body from a Closed Surface Body 11-22
Sewing a Surface to a Solid Body 11-23
Tutorial 1 11-25
Tutorial 2 11-33
Self-Evaluation Test 11-40
Review Questions 11-40
Exercise 1 11-41

Evaluation Copy. Do not reproduce. For information visit www.cadcim.com

Chapter 12: Assembly Modeling

Assembly Modeling 12-2
Types of Assembly Design Approaches 12-2
Creating Bottom-up Assemblies 12-3
Inserting Components in a Product File 12-4
Moving Individual Components 12-6
Applying Constraints 12-11
Creating Top-down Assemblies 12-21
Creating Base Part in the Top-Down Assembly 12-21
Creating Subsequent Components in the Top-Down Assembly 12-22
Creating Subassemblies in the Top-Down Assembly 12-23
Editing Assemblies 12-24
Deleting Components 12-24
Replacing Components 12-25
Editing Components Inside an Assembly 12-26
Editing Subassemblies Inside an Assembly 12-26
Editing Assembly Constraints 12-27
Simplifying the Assembly 12-28
Interference Detection 12-29
Sectioning an Assembly 12-31
Exploding an Assembly 12-32
Creating Scenes of an Assembly 12-34
Tutorial 1 12-35
Tutorial 2 12-50
Self-Evaluation Test 12-58
Review Questions 12-59
Exercise 1 12-60

Chapter 13: Working with the Drafting Workbench-I

The Drafting Workbench 13-2
Starting a New File in the Drafting Workbench 13-2
Types of Views 13-4
Generating Drawing Views 13-6
Generating Views Automatically 13-6
Generating Individual Drawing Views 13-10
Generating an Exploded View 13-24
Working with Interactive Drafting in CATIA V5 13-25
Editing and Modifying Drawing Views 13-25
Changing the Scale of Drawing Views 13-25
Modifying the Project Plane of the Parent View 13-25
Deleting Drawing Views 13-26
Rotating Drawing Views 13-26
Hiding Drawing Views 13-26
Modifying the Hatch Pattern of Section Views 13-26
Tutorial 1 13-27
Tutorial 2 13-33
Self-Evaluation Test 13-42

Evaluation Copy. Do not reproduce. For information visit www.cadcim.com

Review Questions 13-43
Exercise 1 13-44

Chapter 14: Working with the Drafting Workbench-II

Inserting Sheets in the Current File 14-2
Inserting the Frame and the Title Block 14-3
Automatic Insertion of the Frame and the Title Block 14-3
Creating the Frame and the Title Block Manually 14-5
Adding Annotations to the Drawing Views 14-7
Generating Dimensions 14-7
Adding Reference Dimensions 14-10
Adding Datum Features 14-12
Adding Geometric Tolerance to the Drawing Views 14-12
Adding Surface Texture Symbols New 14-15
Adding Welding Symbols 14-16
Applying Weld 14-17
Editing Annotations 14-18
Generating the Bill of Material (BOM) 14-18
Generating Balloons 14-20
Tutorial 1 14-20
Tutorial 2 14-29
Self-Evaluation Test 14-34
Review Questions 14-34
Exercise 1 14-35

Chapter 15: Working with Sheet Metal Components

The Sheet metal Component 15-2
Starting a New File in Generative Sheet Metal Workbench 15-2
Setting Sheet Metal Parameters 15-3
Parameters Tab 15-3
Bend Extremities Tab 15-4
Bend Allowance Tab 15-5
Introduction to Sheet Metal Walls 15-6
Creating the Base Wall 15-6
Creating a Wall On Edge 15-7
Creating Extrusions 15-12
Creating Swept Walls 15-13
Creating Flanges on the Sheet Metal Component 15-14
Creating Hems on the Sheet Metal Component 15-16
Creating a Tear Drop on the Sheet Metal Component 15-16
Creating a User Flange on the Sheet Metal Component 15-17
Creating a Bend 15-18
Creating a Conical Bend 15-19
Bend From Flat 15-20
Creating Rolled Walls 15-23
Creating a Hopper Wall 15-23
Creating a Rolled Wall 15-25
Folding and Unfolding Sheet Metal Parts 15-25

Evaluation Copy. Do not reproduce. For information visit www.cadcim.com

Unfolding Sheet Metal Parts 15-26
Folding Unfolded Parts 15-27
Mapping the Geometry 15-28
Creating Flat Patterns of Sheet Metal Components 15-29
Viewing a Sheet Metal Component in Multiple Windows 15-30
Using Views Management 15-30
Stamping 15-31
Creating a Surface Stamp 15-31
Creating a Bead Stamp 15-34
Creating a Curve Stamp 15-35
Creating a Flanged Cut Out Stamp 15-36
Creating a Louver Stamp 15-37
Creating a Bridge Stamp 15-38
Creating a Flanged Hole Stamp 15-40
Creating a Circular Stamp 15-43
Creating a Stiffening Rib Stamp 15-44
Creating a Dowel Stamp 15-45
Tutorial 1 15-45
Tutorial 2 15-52
Tutorial 3 15-57
Tutorial 4 15-61
Self-Evaluation Test 15-67
Review Questions 15-67
Exercise 1 15-68

Chapter 16: DMU Kinematics

Introduction to DMU Kinematics 16-2
Designing a Mechanism 16-2
Creating the Revolute Joint 16-3
Creating the Prismatic Joint 16-7
Creating the Cylindrical Joint 16-9
Creating the Screw Joint 16-10
Creating the Rigid Joint 16-11
Creating the Spherical Joint 16-12
Creating the Planar Joint 16-14
Creating the Point Curve Joint 16-15
Creating the Slide Curve Joint 16-16
Creating the Roll Curve Joint 16-18
Creating the Point Surface Joint 16-19
Creating the Universal Joint 16-20
Creating the CV Joint 16-21
Creating the Gear Joint 16-22
Creating the Rack Joint 16-24
Creating the Cable Joint 16-25
Converting Assembly Constraints into Joints 16-26
Tutorial 1 16-28
Tutorial 2 16-33
Tutorial 3 16-39

Evaluation Copy. Do not reproduce. For information visit www.cadcim.com

Tutorial 4 16-47
Tutorial 5 16-53
Self-Evaluation Test 16-59
Review Questions 16-60
Exercise 1 16-61
Exercise 2 16-61

CHAPTERS AVAILABLE FOR FREE DOWNLOAD

In this textbook, two chapters have been given for free download. You can download these chapters from our website *www.cadcim.com*. To download these chapters, follow the path: *Textbooks > CAD/CAM > CATIA > CATIA V5-6R2023 for Designers > Chapters for Free Download*. Next, click on the chapter name that you want to download.

Chapter 17: Introduction to Generative Shape Design

The Generative Shape Design Workbench 17-2
Creating Wireframe Elements 17-2
Creating Volumes 17-14
Creating Surfaces 17-22
Performing Operations on Shape Geometry 17-30
Tutorial 1 17-35
Tutorial 2 17-45
Self-Evaluation Test 17-51
Review Questions 17-52
Exercise 1 17-52

Chapter 18: Working with the FreeStyle Workbench

The FreeStyle Workbench 18-2
Starting a New FreeStyle File 18-2
Setting the FreeStyle Workbench 18-3
Creating Surfaces 18-4
Modifying Surfaces 18-14
Tutorial 1 18-22
Self-Evaluation Test 18-28
Review Questions 18-29
Exercise 1 18-29

Chapter 19: Introduction to FEA and Generative Structural Analysis

Introduction to FEA 19-2
Types of Engineering Analysis 19-3
General Procedure to Conduct Finite Element Analysis 19-5
Important Terms and Definitions 19-7
Meshing 19-10
Advanced Meshing Tools Workbench 19-11
Creating Mesh on Parts 19-12
Mesh Transformations 19-21
Mesh Operators 19-29

Evaluation Copy. Do not reproduce. For information visit www.cadcim.com

Generative Structural Analysis Workbench 19-30
Applying Physical Properties 19-31
Creating Virtual Parts 19-33
Applying Restrains 19-38
Applying Loads 19-43
Computing the Analysis Result 19-53
Generating the Analysis Reports 19-54
Animating the Results 19-54
Tutorial 1 19-55
Tutorial 2 19-59
Tutorial 3 19-65
Tutorial 4 19-69
Self-Evaluation Test 19-73
Review Questions 19-74
Exercise 1 19-75

PROJECTS AVAILABLE FOR FREE DOWNLOAD

In this textbook, four projects are available for free download. You can download these projects from our website **www.cadcim.com**.

To download these projects, follow the path: *Textbooks > CAD/CAM > CATIA > CATIA V5-6R 2023 for Designers > Projects for Free Download*. Next, click on the project name that you want to download.

Note

For additional projects, visit **www.cadcim.com** and follow the path: *Textbooks > CAD/CAM > Others> Parametric Solid Modeling Projects*

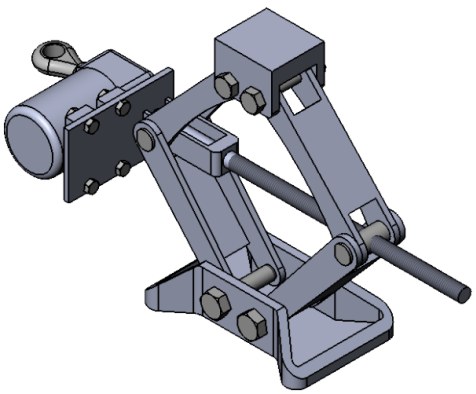

Project 1: *Car Jack Assembly*

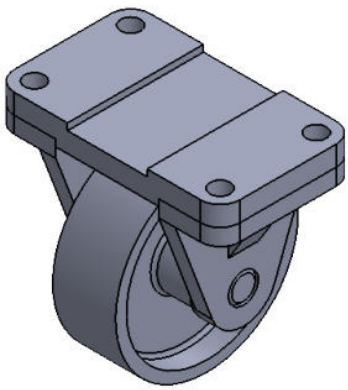

Project 2: *Wheel Assembly*

Evaluation Copy. Do not reproduce. For information visit www.cadcim.com

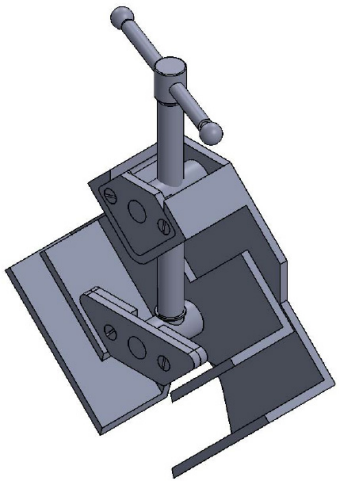

Project 3: *Angle Clamp Assembly*

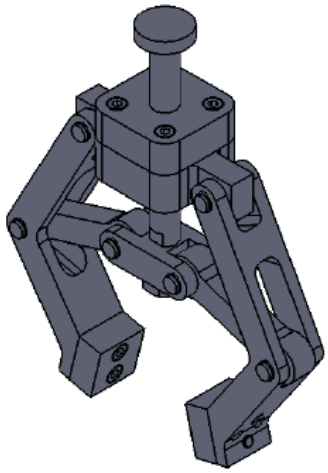

Project 4: *Pneumatic Gripper Assembly*

Index I-1

Evaluation Copy. Do not reproduce. For information visit www.cadcim.com