Chapter 3

Adding Constraints to Sketches

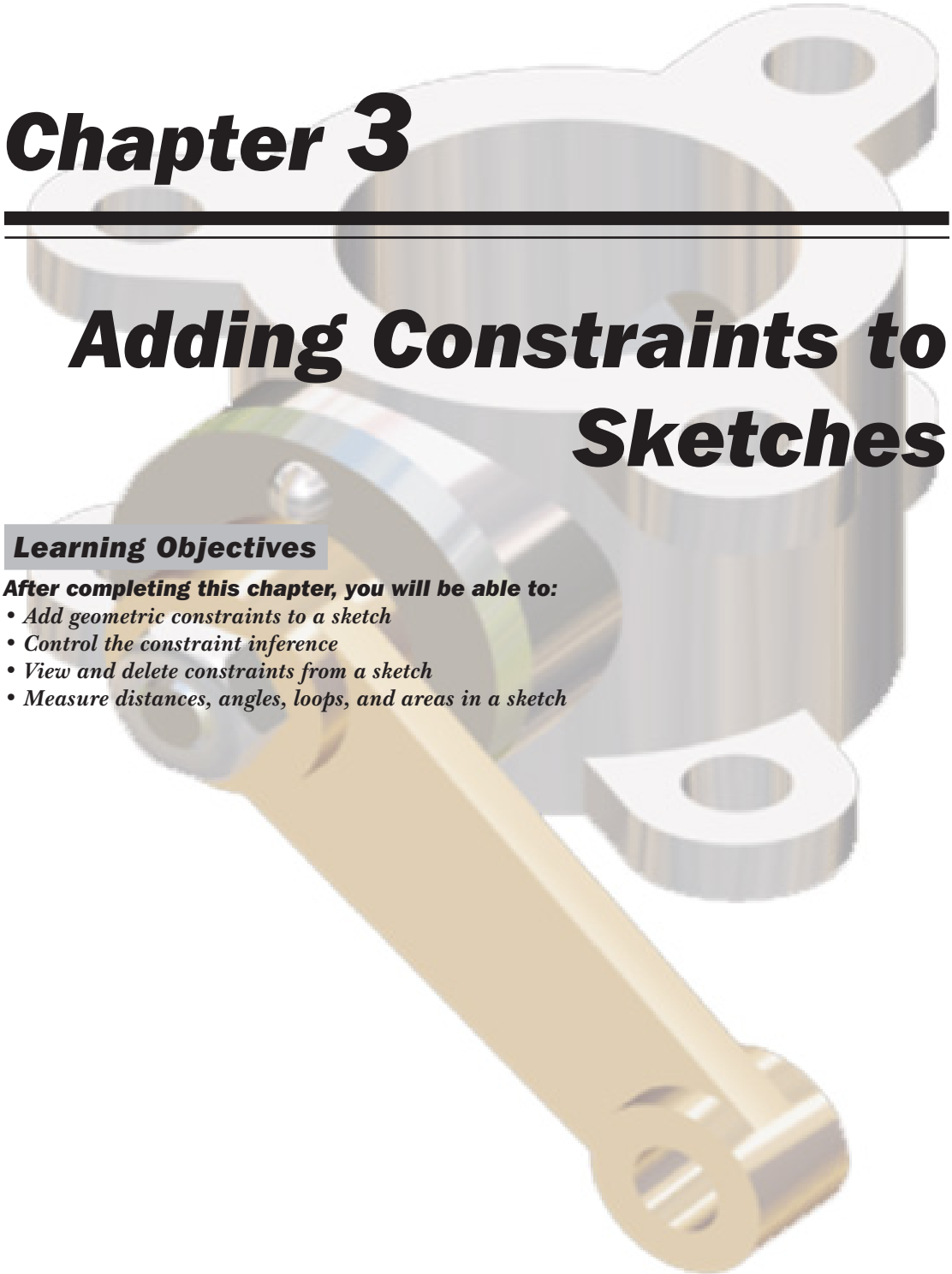

Learning Objectives

After completing this chapter, you will be able to:

- *Add geometric constraints to a sketch*
- *Control the constraint inference*
- *View and delete constraints from a sketch*
- *Measure distances, angles, loops, and areas in a sketch*

ADDING GEOMETRIC CONSTRAINTS TO A SKETCH

Constraints are applied to the sketched entities to define their size and position with respect to other elements. Also, they are useful for capturing the design intent. As mentioned in Chapter 1, there are twelve types of geometric constraints that can be applied to the sketched entities. These constraints restrict their degrees of freedom and make them stable. Most of these constraints get automatically applied to the entities while drawing. However, sometimes you may need to apply some additional constraints to the sketched entities. These constraints are discussed next.

Perpendicular Constraint

Ribbon: Sketch > Constrain > Perpendicular Constraint



The Perpendicular constraint forces the selected entity to become perpendicular to the specified entity. The entities to which the constraints can be applied are lines and ellipse axes. To apply this constraint, choose the **Perpendicular Constraint** tool from the **Constrain** panel of the **Sketch** tab; you will be prompted to select the first line or an ellipse axis. After selecting the first entity, you will be prompted to select the second line or ellipse axis. On selecting the second entity, the selected entities will become perpendicular. Figure 3-1 shows two lines before and after adding this constraint. Similarly, you can also apply the Perpendicular constraint between two arcs.

Parallel Constraint

Ribbon: Sketch > Constrain > Parallel Constraint



The Parallel constraint forces the selected entity to become parallel to the specified entity. The entities to which this constraint can be applied are lines and ellipse axes. To apply this constraint, choose the **Parallel Constraint** tool from the **Constrain** panel of the **Sketch** tab; you will be prompted to select the first line or an ellipse axis. After you select an entity, you will be prompted to select the second line or an ellipse axis. On selecting the second entity, the two entities will become parallel. Figure 3-2 shows two lines before and after adding this constraint.

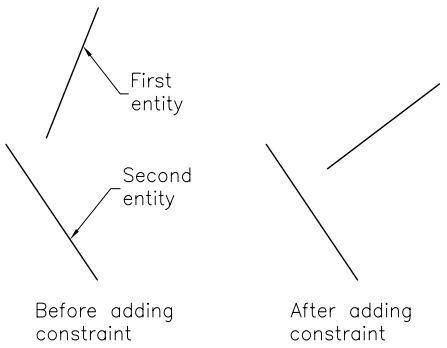

Figure 3-1 *Lines before and after applying the Perpendicular constraint*

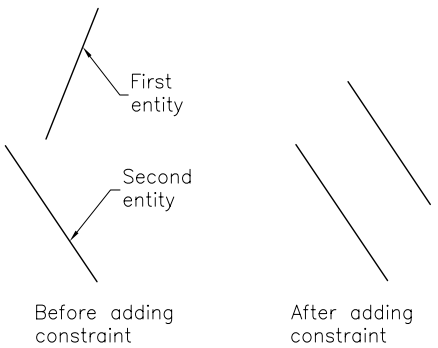

Figure 3-2 *Lines before and after applying the Parallel constraint*

Evaluation Copy. Do not reproduce. For information visit www.cadcim.com

Tangent Constraint

Ribbon: Sketch > Constrain > Tangent



The Tangent constraint forces the selected line segment or curve to become tangent to another curve. To apply this constraint, choose the **Tangent** tool from the **Constrain** panel of the **Sketch** tab; you will be prompted to select the first curve. After you select the first curve, you will be prompted to select the second curve. The curves that can be selected are lines, circles, ellipses, or arcs. Figures 3-3 and 3-4 show the Tangent constraint applied between a line and a circle, and between an ellipse and arc, respectively.

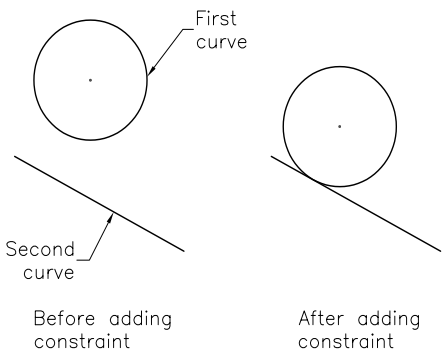

Figure 3-3 *The Tangent constraint applied between a line and a circle*

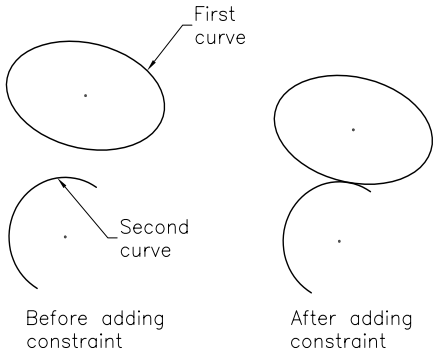

Figure 3-4 *The Tangent constraint applied between an ellipse and an arc*

Coincident Constraint

Ribbon: Sketch > Constrain > Coincident Constraint



The Coincident constraint forces two points or a point and a curve to become coincident. To apply this constraint, choose the **Coincident Constraint** tool from the **Constrain** panel of the **Sketch** tab; you will be prompted to select the first curve or point. After you select the first curve or point, you will be prompted to select the second curve or point. Note that either the first or the second entity selected should be a point. The points include sketch points, endpoints of a line or an arc, or center points of circles, arcs, or ellipses.

Concentric Constraint

Ribbon: Sketch > Constrain > Concentric Constraint



The Concentric constraint forces two curves to share the same location of center points. The curves that can be made concentric include arcs, circles, and ellipses. When you invoke this constraint, you will be prompted to select the first arc, circle, or ellipse. After making the first selection, you will be prompted to select the second arc, circle, or ellipse. Select the second entity to be made concentric with the first entity.

Evaluation Copy. Do not reproduce. For information visit www.cadcim.com

Note

*If you apply a constraint that over-constrains a sketch, the **Autodesk Inventor Professional - Create Constraint** message box will be displayed informing that adding this constraint will over-constrain the sketch, refer to Figure 3-5. A sketch is said to be over-constrained if the number of dimensions or constraints in it exceeds the number that can be applied to the sketch.*

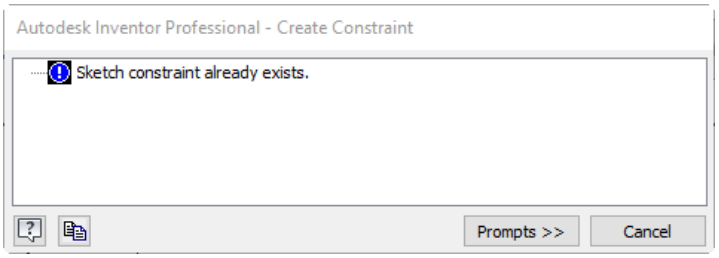

***Figure 3-5** The **Autodesk Inventor Professional - Create Constraint** message box*

Collinear Constraint

Ribbon: Sketch > Constrain > Collinear Constraint

The Collinear constraint forces the selected line segments or ellipse axes to be placed in the same line. When you invoke this constraint, you will be prompted to select the first line or ellipse axis. After making the first selection, you will be prompted to select the second line or ellipse axis. Select the entity to be made collinear with the first entity.

Tip

To select an ellipse axis, move the cursor close to the ellipse. The minor or the major axis, whichever the cursor is close to, will get highlighted. When the required axis is highlighted, select it using the left mouse button.

Horizontal Constraint

Ribbon: Sketch > Constrain > Horizontal Constraint

The Horizontal constraint forces the selected line segment, ellipse axis, or two points to become horizontal, irrespective of their original orientation. When you invoke this constraint, you will be prompted to select a line, an ellipse axis, or the first point. If you select a line or an ellipse axis, it will become horizontal. If you select a point, you will be prompted to select the second point. The points, in this case, can also include the center points of arcs, circles, or ellipses.

Vertical Constraint

Ribbon: Sketch > Constrain > Vertical Constraint

The Vertical constraint is similar to the Horizontal constraint with the only difference that this constraint forces the selected entities to become vertical.

Evaluation Copy. Do not reproduce. For information visit www.cadcim.com



Tip

You can use the Horizontal or Vertical constraint to line up arcs, circles, or ellipses in the horizontal or vertical direction by selecting their center points.

Equal Constraint

Ribbon: Sketch > Constrain > Equal



The Equal constraint can be used for line segments or curves. If you select two line segments, this constraint will force the length of one of the selected line segments to become equal to the length of the other selected line segment. In case of curves, this constraint will force the radius of one of the selected curves to become equal to that of the other selected curve. Note that if the first selection is a line, the second selection will also be a line. Similarly, if the first selection is a curve, the second selection also needs to be a curve.

Fix Constraint

Ribbon: Sketch > Constrain > Fix



The Fix constraint is used to fix the orientation or location of the selected curve or point with respect to the coordinate system of the current drawing. If you apply this constraint to a line or an arc, you cannot move them from their current locations. However, you can change their length by selecting one of their endpoints and then dragging them. If you apply this constraint to a circle or an ellipse, you cannot edit either of these entities by dragging. Once you apply this constraint to an entity, its color changes.

Symmetric Constraint

Ribbon: Sketch > Constrain > Symmetric



This constraint is used to force two selected sketched entities to become symmetrical about a single sketched line segment. On invoking this constraint, you will be prompted to select the first sketched element. Note that you can select only one entity at a time to apply this constraint. Once you have selected the first sketched entity, you will be prompted to select the second sketched element. Select the second sketched entity; you will be prompted to select the symmetry line. Select the symmetry axis (an axis about which the selected entities need to be symmetric); the second selected entity will become symmetric to the first entity. After you have applied this constraint to one set of entities, you will again be prompted to select the first and second sketched entities. However, this time you will not be prompted to select the line of symmetry. The last line of symmetry will be automatically selected to add this constraint. Similarly, you can apply this constraint to other entities.

If the line of symmetry is different for applying the symmetric constraint to different entities in the sketch, you will have to restart the process of applying this constraint by right-clicking and then choosing the **Restart** option from the Marking Menu. This is because the first symmetry line is used to apply this constraint to all sets of entities you select. However, if you restart applying this constraint, you will be prompted to select the line of symmetry again.

Evaluation Copy. Do not reproduce. For information visit www.cadcim.com

Smooth Constraint

Ribbon: Sketch > Constrain > Smooth (G2)



This constraint is used to apply curvature continuity between a spline and an entity connected to it. The entities that can be selected to apply this constraint include a line, arc, or another spline. Note that these entities should be connected to the spline.



Note

In Autodesk Inventor, you can apply the Perpendicular, Tangent, and Smooth (G2) constraints between different types of splines.

VIEWING THE CONSTRAINTS APPLIED TO A SKETCHED ENTITY

Ribbon: Sketch > Constrain > Show Constraints



You can view all the constraints that are applied to the entities of a sketch by choosing the **Show Constraints** tool from the **Constrain** panel. When you invoke this tool and move the cursor close to a sketched entity, it will be highlighted and constraints will be displayed after a pause. These constraints show the symbols of all the constraints that are applied to the entity. Figure 3-6 shows the constraints applied to the lines. You can move a constraint by selecting and dragging it. In the case of Coincident constraint, the constraint applied on a point is highlighted in yellow. To view symbols, move the cursor over the highlighted yellow point; the color of the point will change, refer to Figure 3-6.

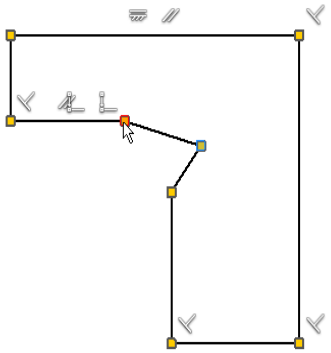

Figure 3-6 *Constraints applied to the sketch entities*

If you move the cursor close to a constraint, it will be highlighted and the entities to which the constraint is applied is also highlighted. For example, if you take the cursor close to a perpendicular constraint, the vertical line will also be highlighted along with the horizontal line, suggesting that the two lines are perpendicular to each other.



Tip

You can display all the constrains applied to the entities. To do so, choose the ***Show All Constraints*** *button from the status bar which is available at the bottom of the graphics window; separate symbols will be displayed showing the constraints on all entities. Similarly, to hide all constraints, choose the* ***Hide All Constraints*** *button from the status bar.*

Evaluation Copy. Do not reproduce. For information visit www.cadcim.com

CONTROLLING CONSTRAINTS AND APPLYING THEM AUTOMATICALLY WHILE SKETCHING

Ribbon: Sketch > Constrain > Constraint Settings



You can control and select the constraints that need to be applied automatically as well as select the geometry to which they will be applied. You can do so by using the **Constraint Settings** dialog box. To invoke this dialog box, choose the **Constraints Settings** tool from the **Constrain** panel of the **Sketch** tab. This dialog box is discussed next.

Constraint Settings Dialog box

While drawing the sketch, by default, all the possible constraints get automatically applied to the sketching entities. However, you can also specify the constraints that need to be applied automatically and the geometry to which they will be applied while sketching. To do so, choose the **Constraint Settings** tool from the **Constrain** panel of the **Sketch** tab; the **Constraint Settings** dialog box will be displayed, as shown in Figure 3-7. The options in this dialog box are discussed next.

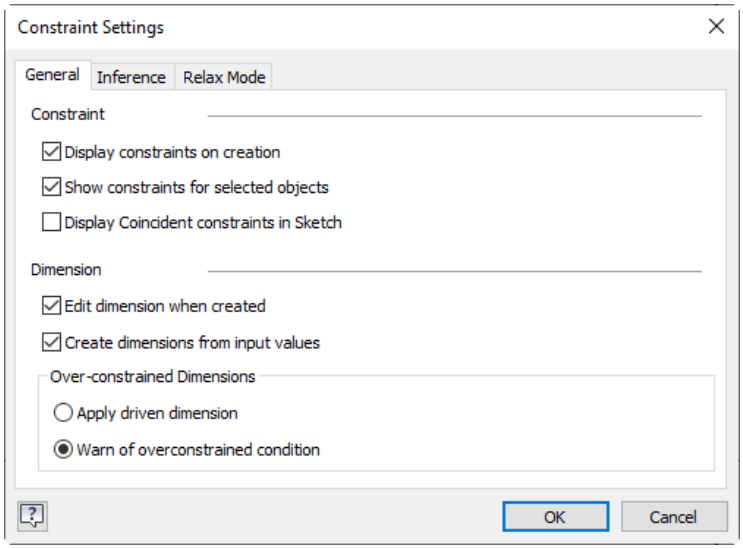

***Figure 3-7** The **Constraint Settings** dialog box*

General

The **General** tab is chosen by default. The options in this tab are discussed next.

Constraint

Three check boxes are available in this area. The **Display constraints on creation** check box allows you to display the constraints applied during the creation of sketch. The **Show constraints for selected objects** check box allows you to show the constraints applied on the selected object. If you select the **Display Coincident constraints in Sketch** check box, Autodesk Inventor allows you to display the coincident constraints applied to the sketch. By default, this check box is clear.

Evaluation Copy. Do not reproduce. For information visit www.cadcim.com

Dimension

This area is used to apply the Dimensions constraints to the sketch. In this area, two check boxes are available. These check boxes are used to apply dimensions during the creation of sketch.

Over-constrained Dimensions

This area is used to control the over defined dimensions applied to the sketch. In this area, two radio buttons are available. If you select the **Apply driven dimension** radio button, you will be able to apply the over defined dimension to the sketch. In this case, over defined dimension is considered as the reference dimension. The **Warn of overconstrained condition** radio button is selected by default in this area. Therefore, you will not be able to apply the over defined dimensions to the sketch. In this case, a warning message will be displayed.

Inference

In the **Inference** tab, two areas are available. The options in this tab are discussed next.

Constraint Inference Priority

This area is used to set up the inference priority of the constraints. You need to select the appropriate radio button to set up the priority.

Selection for Constraint Inference

In this area, nine check boxes corresponding to nine constraints are available. All check boxes are selected by default. However, if you need to clear all the constraints, choose the **Clear All** button. You can manually select or clear the required constraint by selecting the corresponding check box provided on the right of the constraint symbols. The selected constraints will be applied automatically to the geometry while sketching.

Relax Mode

In this tab, the **Enable Relax Mode** check box is available. If you select this check box, you will be able to remove the constraints from the geometry while dragging the sketch. In this case, you can remove only that constraint whose respective check box is selected in the **Constraints to remove in relax dragging** area.

Scope of Constraint Inference

Ribbon: Sketch > Constrain > Constraint Inference Scope



The **Constraint Inference Scope** tool is used to set the geometry to which the constraint is applied while drawing. You can invoke this tool from the **Constrain** panel of the **Sketch** tab. On invoking this tool, the **Constraint Inference Scope** dialog box will be displayed. In this dialog box, the **Geometry in current command** radio button is selected by default. As a result, the constraint is applied to the current geometry. If you select the **Select** radio button, the **Select** button will be enabled automatically. You can use this button to select the geometry to which the constraints will be applied. If you select the **All Geometry** radio button, the constraint will be applied to all the active sketches.

Evaluation Copy. Do not reproduce. For information visit www.cadcim.com

DELETING GEOMETRIC CONSTRAINTS

Autodesk Inventor allows you to delete the constraints applied to the selected entities. To delete constraints, first you need to show the constraint of entities by using the **Show Constraints** tool. Once the constraints are displayed, exit the **Show Constraints** tool by pressing the Esc key. Next, move the cursor over the constraint that you want to delete; it will be highlighted in red. Click the left mouse button to select the constraint. Next, move the cursor away and right-click, and then choose **Delete** from the Marking menu, see Figure 3-8. The selected constraint will be deleted. Similarly, you can delete all unwanted constraints from the sketch.

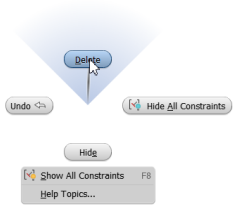

Figure 3-8 *Choosing the* ***Delete*** *option from the Marking menu*

Note

The total number of constraints and dimensions required to fully constraint a sketch is displayed at the lower right corner of the graphics window.

Tip

When you move the cursor close to a constraint, its references will be highlighted in the sketch. For example, if you move the cursor over the Perpendicular constraint, the lines on which this constraint is applied will be highlighted indicating that the constraint selected is correct.

SETTING THE SCALE OF A SKETCH

In Autodesk Inventor, if you change the current length of an entity by changing its dimension value, all the other entities of the sketch get modified proportionally or scaled accordingly. Note that this will be applicable only if no other dimension is applied to the sketch. As you apply the second dimension to the sketch, the sketch will not be scaled proportionally, on changing the dimension value. Figure 3-9 shows the sketch without any dimension and Figure 3-10 shows the sketch scaled automatically after applying the first dimension to it.

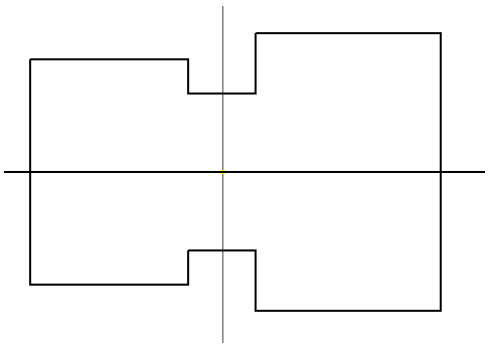

Figure 3-9 *Sketch on the graphics screen*

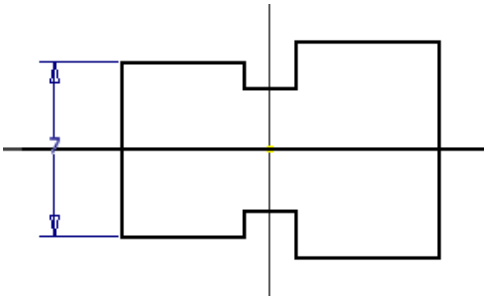

Figure 3-10 *Sketch resized after editing the first dimension*

Evaluation Copy. Do not reproduce. For information visit www.cadcim.com

CREATING DRIVEN DIMENSIONS

Ribbon: Sketch > Format > Driven Dimension



This toggle button is used to switch between the driven dimension and the sketch (driving) dimension. A dimension is called as a sketch (driving) dimension, if it forces an entity to change its length and orientation. A driven dimension is the one whose value depends on the value of the sketch (driving) dimension. The driven dimensions are enclosed within parenthesis and display the current value of the sketched geometry. This value cannot be modified. If you change the value of the sketch (driving) dimension, the value of the driven dimension will change automatically, as shown in Figures 3-11 and 3-12. All dimensions applied after choosing the **Driven Dimension** button will be the driven dimensions. To convert sketch (driving) dimensions into driven dimensions, select the required sketch (driving) dimension and choose the **Driven Dimension** button from the **Format** panel.

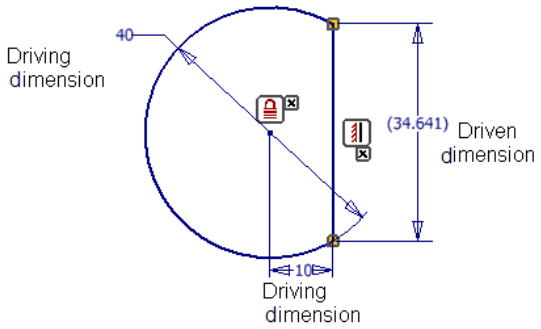

Figure 3-11 *Driving dimension and driven dimension in a sketch*

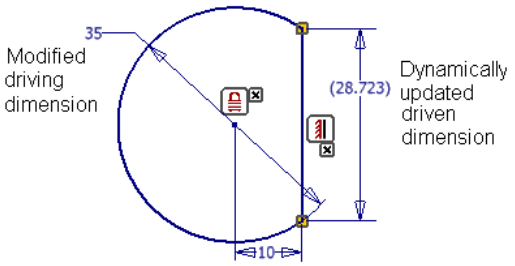

Figure 3-12 *Modified driving dimension and dynamically updated driven dimension*

UNDERSTANDING THE CONCEPT OF FULLY-CONSTRAINED SKETCHES

A fully-constrained sketch is one whose entities are all completely constrained to their surroundings using constraints and dimensions. In a fully-constrained sketch, all degrees of freedom of the sketch are constrained. A fully-constrained sketch cannot change its size, location, or orientation unexpectedly. Whenever you draw a sketched entity, it will turn green in color. However, the entity will turn blue if you add required dimensions to a sketch to make it fully constrained. There is one more method to understand whether the sketched entities are fully-constrained or not. In this method, you need to right-click on the sketched entity and choose the **Display Degrees of Freedom** option from the Marking Menu displayed; the entities will display the available degrees of freedom such as horizontal, vertical, angular, or rotational. Alternatively, click on the **Show All Degrees of Freedom** toggle button available at the bottom of the graphics window to display the degrees of freedom. Note that while creating the base sketch in Autodesk Inventor, you need to dimension it with respect to a fixed point to fully constrain it. To do so, you can fix the sketch with the origin, which is already fixed by default. You can control the visibility of this origin. To hide this point, choose the **Application Options** button from

Evaluation Copy. Do not reproduce. For information visit www.cadcim.com

the **Tools** tab; the **Application Options** dialog box will be invoked. Choose the **Sketch** tab and then clear the **Autoproject part origin on sketch create** check box. Next, close the dialog box.



Tip

In Autodesk Inventor, when you switch into the Part module; a fully-constrained sketch gets denoted by the  *symbol in the* ***Browser Bar****.*

MEASURING SKETCHED ENTITIES

Ribbon: Inspect > Measure > Measure

Autodesk Inventor allows you to measure various parameters of the sketched entities. The parameters that you can measure are distances, angles, loops, and area. All these parameters can be measured by using the **Measure** tool from the **Measure** panel of the **Inspect** tab. Various methods of measuring these parameters are discussed next.

Measuring Distances

You can measure the distance between various entities by using the **Measure** tool. The methods of measuring distances between various entities are discussed next.



Tip

To restart measuring the distances, right-click in the graphics window to display a shortcut menu and then choose ***Repeat Measure****; you will be prompted to select the first element to be measured.*

Measuring the Length of a Line Segment

When you invoke the **Measure** tool, the **Measure** dialog box will be displayed and you will be prompted to select the first entity. Select a line segment; the length of the selected line segment will be displayed in this dialog box, see Figure 3-13.

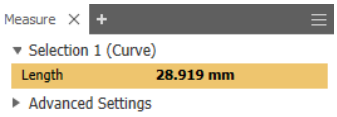

Figure 3-13 *The* ***Measure*** *dialog box displaying the length of a line segment*

Measuring the Distance between a Point and a Line Segment

To measure the distance between a point and a line segment, invoke the **Measure** tool and then select the point. The **Measure** dialog box will display the X, Y, and Z coordinates of the point under the **Position** rollout, and you will be prompted to select the next entity. Select the line; the dialog box will display the minimum and maximum distance between the point and the line, and the length of the line, see Figure 3-14.

Evaluation Copy. Do not reproduce. For information visit www.cadcim.com

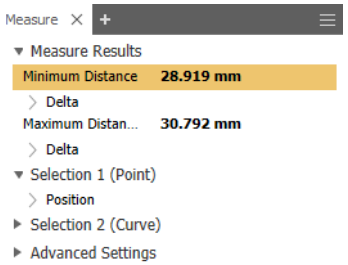

Figure 3-14 *The* ***Measure*** *dialog box displaying the distance between a point and line*

Measuring the Coordinates of a Point

To measure the coordinates of a point with respect to the current coordinate system, invoke the **Measure** tool; you will be prompted to select the first element. Select the point whose coordinates you want to know; the coordinates of the selected point will be displayed in the **Measure** dialog box under the **Position** rollout, see Figure 3-15. The selectable points include the endpoints of lines, arcs, or splines, center point of arcs, circles, or ellipses, or hole centers.

Measuring the Distance between Two Points

To measure the distance between two points, invoke the **Measure** tool and then select the first point; the coordinates of the selected point will be displayed in the **Measure** dialog box. You will be prompted to select the second element. Select the second point; the distance between the two points will be displayed in the **Measure** dialog box. This dialog box will also display the coordinates of both the points. You will also notice the **X Distance**, **Y Distance**, and **Z Distance** values in the **Delta** rollout of this dialog box, see Figure 3-16. These values are the distances between the two selected points along the X, Y, and Z axes.

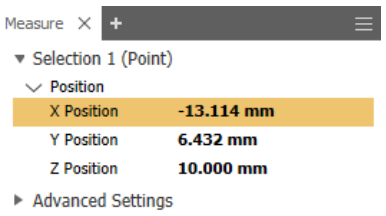

Figure 3-15 *The* ***Measure*** *dialog box displaying the coordinates of a point*

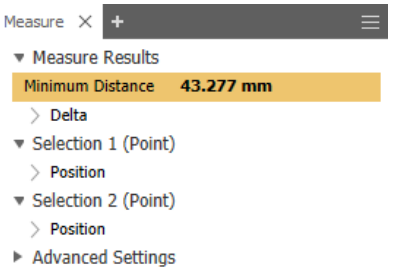

Figure 3-16 *The* ***Measure*** *dialog box displaying distance between two points*

Evaluation Copy. Do not reproduce. For information visit www.cadcim.com

Measuring the Radius of an Arc or the Diameter of a Circle

You can also measure the radius of an arc or the diameter of a circle by using the **Measure** tool. To do so, invoke the **Measure** tool, the **Measure** dialog box will be displayed and you will be prompted to select the first item. Select an arc or a circle. On selecting the first item, the radius of the arc or the diameter of the circle will be displayed with some information of the selected entity, such as the angle of arc, its length, and the coordinates of the center point, see Figure 3-17 and Figure 3-18.

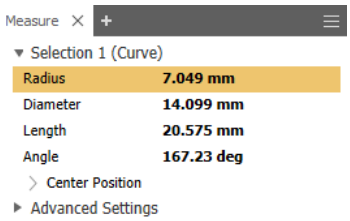

Figure 3-17 *The **Measure** dialog box displaying the radius of the arc*

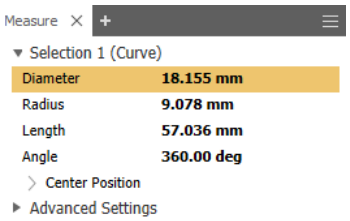

Figure 3-18 *The **Measure** dialog box displaying the diameter of the circle*

Measuring Angles

You can also measure the angle between two line segments by using the **Measure** tool. The methods of measuring angle between various entities are discussed next.

Measuring the Angle between Two Lines

To measure the angle between two lines, invoke the **Measure** tool; the **Measure** dialog box will be displayed and you will be prompted to select the first item. Select the first line; you will be prompted to select the second line. Select the second line; the angle between the selected line segments will be displayed with various other measurements in the **Measure** dialog box, refer to Figure 3-19.

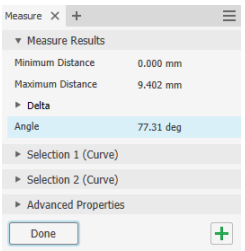

Figure 3-19 *The **Measure** dialog box displaying the angle between two lines*

Measuring the Angle Using Three Points

You can also measure the angle using three points. When you invoke the **Measure** tool, you will be prompted to select the first point. Select the first point; you will be prompted to select the next point. After you select the second point, you will again be prompted to select the next point. Select the third point by pressing and holding the SHIFT key. Once you have selected the three points, Autodesk Inventor draws reference lines between the first and second points as well as between the second and third points, as shown in Figures 3-20 and 3-21. The angle between these two reference lines will be measured and displayed in the dialog box.

Measuring the Angle Between Two Faces

You can also measure angle between two faces. When you invoke the **Measure** tool, you will be prompted to select the first item. Select the first face or plane; you will be prompted to select the next point. Select the second face or plane. The angle between these two faces will be measured and displayed in the dialog box and in the graphics window.

Evaluation Copy. Do not reproduce. For information visit www.cadcim.com

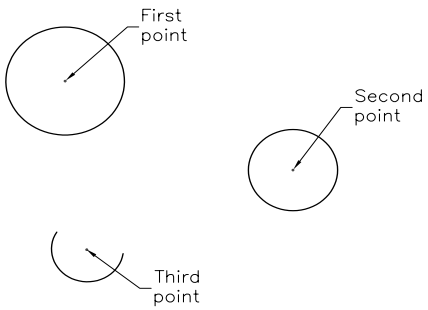

Figure 3-20 *Selecting three points*

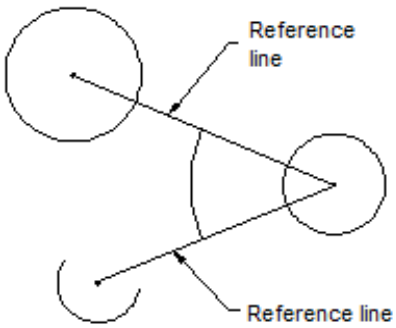

Figure 3-21 *Angle between reference lines*

Measuring Loops

You can also measure a loop by using the **Measure** tool. To measure a close loop, invoke the **Measure** tool, the **Measure** dialog box will be displayed; you will be prompted to select a face or a loop. On selecting a face or a loop, the total length of the loop will be displayed in this dialog box. Figure 3-22 shows the **Measure** dialog box with the measurement of a loop.

Measuring the Area

You can also measure the area of a closed loops by using the **Measure** tool. To measure the area of a closed loops, invoke the **Measure** tool; the **Measure** dialog box will be displayed and you will be prompted to select a face or a loop. Select the closed loop to measure the area; the area of the loop or the face will be displayed in the dialog box. Figure 3-23 shows the **Measure** dialog box with the area of a closed loop.

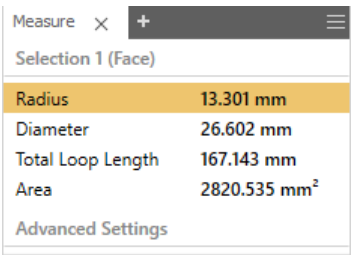

Figure 3-22 *The* ***Measure*** *dialog box displaying the loop length*

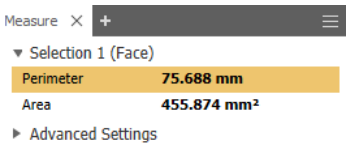

Figure 3-23 *The* ***Measure*** *dialog box displaying the area of a face or loop*



Tip

You can also measure the loop or the area defined by the face of an existing feature. You will learn more about these features in the later chapters.

Evaluation Copy. Do not reproduce. For information visit www.cadcim.com

Evaluating Region Properties

Ribbon: Inspect > Measure > Region Properties

This tool is used to evaluate the properties of the closed loop sketch such as area, perimeter, and also display the region properties of the sketch such as Area and Polar Moment of Inertia by taking measurements from the sketch coordinate system. To invoke this tool, choose the **Region Properties** tool from the **Measure** panel of the **Inspect** tab; the **Region Properties** dialog box will be displayed, as shown in Figure 3-24. The options in this dialog box are discussed next.

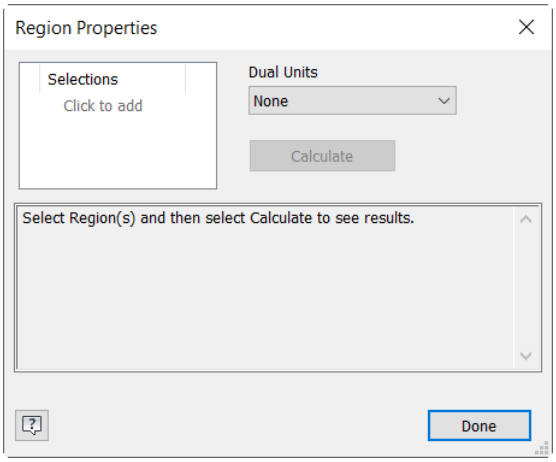

Figure 3-24 *The* ***Region Properties*** *dialog box*



Note

The ***Region Property*** *tool can only be invoked in the 2D sketching mode.*

Selections

When you invoke the **Region Properties** dialog box, this area is chosen by default; you will be prompted to select one or more closed sketch loops. Select one or more closed sketch loops from the drawing window. The selected loop will be displayed under this area.

Dual Units

You can select the required unit of measurement from this drop-down list to display the results of measurements in the selected unit.

Calculate

This button is used to calculate the result. To calculate the result, select the sketch loop. After selecting the sketch loop, choose the **Calculate** button; the results will be displayed in the display box. In case you add or remove a closed loop from the **Selections** area or change the unit in the **Dual Units** drop-down list, the recalculation will occur and the updated results will be displayed in the display box on again selecting the **Calculate** button.

Evaluation Copy. Do not reproduce. For information visit www.cadcim.com

TUTORIALS

From this chapter onward, you will use the parametric feature of Autodesk Inventor for drawing and dimensioning the sketches. The following tutorials will explain the method of drawing sketches with some arbitrary dimensions and then driving them to the dimension values required in the model.

Tutorial 1

In this tutorial, you will draw the sketch for the model shown in Figure 3-25. After drawing the sketch, you will add the required constraints to it and then dimension it. The dimensioned sketch required for this model is shown in Figure 3-26. The solid model shown in Figure 3-25 is only for reference.

The sketch shown in Figure 3-26 is the combination of multiple closed loops: the outer loop and inner circles. As the numbers of loops increase, so does the complexity of the sketch. This is because the numbers of constraints and dimensions in a sketch increase in case of multiple loops. Now, to draw sketches without using the Dynamic Input, it is recommended that you first draw the outer loop of the sketch and then add constraints and dimensions to it. This is because once the outer loop has been constrained and dimensioned, the inner circles can be constrained and dimensioned easily with reference to the outer loop.

(Expected time: 30 min)

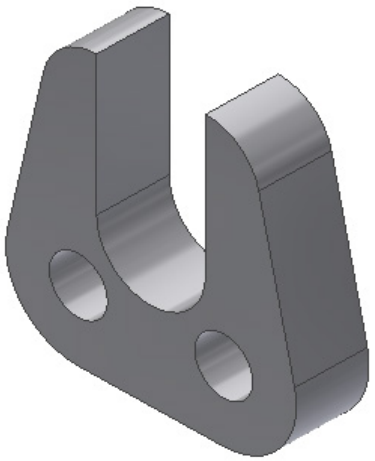

Figure 3-25 *Model for Tutorial 1*

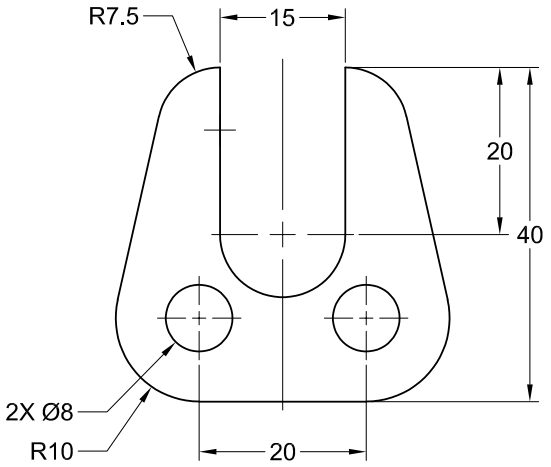

Figure 3-26 *Dimensioned sketch of the model*

The following steps are required to complete this tutorial:

a. Start a new metric template and draw the outer loop of the sketch.
b. Add required dimensions and constraints to the outer loop.
c. Draw inner circles and add constraints and dimensions to them.
d. Save the sketch with the name *Tutorial1.ipt* and close the file.

Evaluation Copy. Do not reproduce. For information visit www.cadcim.com

Starting a New File and Invoking the Sketching Environment

1. Choose the **New** button from the **Quick Access Toolbar** and start a new metric standard part file using the **Metric** tab of the **Create New File** dialog box.

2. Choose the **Start 2D Sketch** button from the **Sketch** panel of the **3D Model** tab; the default planes are displayed and you are prompted to select the sketching plane.

3. Select the **XY Plane** (Front Plane) as the sketching plane from the graphics window; the Sketching environment is invoked and the **XY Plane** (Front Plane) becomes parallel to the screen.

Drawing the Outer Loop

1. Invoke the **Line** tool from the **Create** panel in the **Sketch** tab, refer to Figure 3-27.

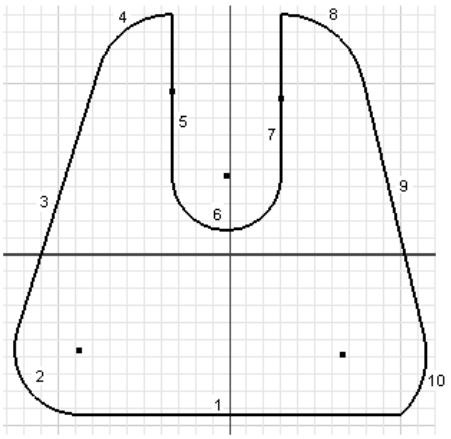

Figure 3-27 *Profile with geometries numbered*

You can also draw the tangent arcs while using the **Line** tool. This can be done by invoking the **Line** tool and by pressing the left mouse button and then dragging it in the required direction. Move the cursor close to the endpoint of the last line until the yellow circle snaps to that point. When the yellow circle snaps to the endpoint, it turns gray. Next, press and hold the left mouse button and drag the mouse through a small distance in the upward direction.

For your reference, all the geometries in the sketch are numbered. You will draw inner holes in the sketch after dimensioning the outer loop.



Note

The outer loop that you created in the previous step might be different from the one shown in Figure 3-27. You can find the missing constraints by following the next step and applying constraints accordingly.

Evaluation Copy. Do not reproduce. For information visit www.cadcim.com

Adding Constraints to Sketched Entities

As evident from Figure 3-27, some of the constraints such as tangent and equal are missing in the sketch. The sketch shown in Figure 3-27 may not be symmetrical and all the lines in the sketch may not be tangent to the arcs. Therefore, you need to add these missing constraints manually to the sketch to complete it. You can choose the **Show Constraint** option from the Marking menu that is displayed when you right-click on an entity.

1. In Figure 3-27, the **Tangent** constraint is missing between line 1 and arc 10. To add this constraint between the line and the arc, choose the **Tangent** tool from the **Constrain** panel of the **Sketch** tab; you are prompted to select the first curve. Select arc 10 as the first curve; you are prompted to select the second curve. Select line 1 as the second curve. Similarly, add this constraint to all the places in the sketch wherever it is missing.

   The geometries 5 and 7, and 3 and 9 are the lines that must be of equal length. Also, the geometries 2 and 10, and 4 and 8 are the arcs that must be of equal radii. Therefore, you need to add the Equal constraint between the respective pairs of all these geometries.

2. Choose the **Equal** tool from the **Constrain** panel of the **Sketch** tab.

3. Select line 5 as the first line and then line 7 as the second line to apply the Equal constraint to them; you are prompted again to select the first entity.

4. Select line 3 and then line 9 to apply the Equal constraint to them; you are prompted to select the first entity again.

5. Select arc 2 and then arc 10 to apply the Equal constraint to them. Applying this constraint to arcs or circles forces their radii or diameters to be equal.

6. Similarly, apply the Equal constraint to arc 4 and arc 8.

7. Apply the Coincident constraint between the center point of arc 4 and line 5, and the center point of arc 8 and line 7 if not automatically applied.

8. Choose the **Symmetric** tool from the **Constrain** panel of the **Sketch** tab to apply Symmetric constraint between line 3 and line 9. To apply a symmetric constraint, you need to draw a vertical line of symmetry through the origin.

9. Choose the **Coincident Constraint** tool from the **Constrain** panel; you are prompted to select the first curve or point.

10. Select the origin; you are prompted to select the second curve or point.

11. Select the center point of arc 6; the entire sketch moves to make the origin coincident with the center point of the arc. The sketch after applying all the constraints is shown in Figure 3-28.

Evaluation Copy. Do not reproduce. For information visit www.cadcim.com

Note

The shape of the sketch that you have drawn may be a little different from the final sketch at this stage because of the difference in specifying points while drawing the sketch. However, once all the dimensions are applied, the shape of the sketch will be the same as of the final sketch. Also, you may need to add vertical constraint to lines 5 and 7 and horizontal constraint to line 1 to fully constrain the sketch.

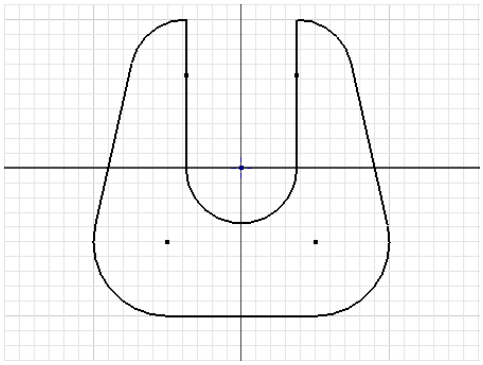

Figure 3-28 *The sketch after applying all constraints*

Dimensioning the Sketch

1. Choose the **Dimension** tool from the **Constrain** panel of the **Sketch** tab. Next, right-click to display the Marking menu. From the Marking menu, choose **Edit Dimension** if the check mark is not available on the left of the **Edit Dimension** option. If it shows the check mark, press the Esc key once to exit the Marking Menu. On doing so, you are prompted to select the geometry to be dimensioned. Select line 1 and place the dimension below the sketch. Modify the value of this dimension in the **Edit Dimension** edit box to **20**.

2. Select arc 4 and place the dimension on the left of the sketch; the radius dimension of the sketch is placed. Modify the dimension value in the **Edit Dimension** edit box to **7.5**. The size of arc 8 is also modified because the Equal constraint is applied between these two entities.

Note

As discussed in the previous tutorial, you may need to use the combination of hot keys to zoom or pan the model.

3. Select arc 2 and place the radius dimension on the left of the sketch. Modify the dimension value in the **Edit Dimension** edit box to **10** and press Enter. The size of arc 10 is also modified because of the **Equal** constraint applied between these two entities.

4. Select line 5 and then line 7, and then place the dimension above the sketch. Modify the value of this dimension in the **Edit Dimension** edit box to **15** and press Enter.

5. Select line 7 and place the dimension on the right of the sketch. Modify the value of this dimension in the **Edit Dimension** edit box to **20** and press Enter.

Evaluation Copy. Do not reproduce. For information visit www.cadcim.com

6. Select the upper endpoint of line 7 and select line 1, and then place the dimension on the right of the previous dimension. Modify the value of this dimension to **40** and press Enter. Next, exit the **Dimension** tool.

With this step, all the dimensions have been applied to the sketch, refer to Figure 3-29, except the horizontal dimension between the center points of arcs 4 and 6 or arcs 8 and 6. The need of these dimensions depends on the constraints and dimensions assumed while drawing the sketch. If the sketch gets over-constrained, the **Autodesk Inventor Professional** message box is displayed. Choose **Cancel** from the message box. In this case, the dimension has already been assumed.

Drawing Circles

Once all the required dimensions and constraints have been applied to the sketch, you need to draw circles. Figure 3-26 indicates that circles are concentric with arcs 2 and 10.

1. Choose the **Center Point Circle** tool from the **Create** panel; you are prompted to select the center of the circle. Move the cursor close to the center of arc 2. Specify the center point when the cursor snaps to the center point of arc 2 and turns green. Next, move the cursor away from the center and specify a point to size the circle.

2. Similarly, draw the other circle taking the reference of the center of arc 10.

Adding Constraints to Circles

As both the circles have the same diameter, you can apply the Equal constraint to them. On applying the dimension to one of the circles, the other circle will automatically be forced to be created as per the specified diameter value as the Equal constraint has been applied on it.

1. Invoke the **Equal** constraint tool from the **Constrain** panel. Select the first circle and then the second circle to apply the Equal constraint.

Dimensioning Circles

1. Choose the **Dimension** tool from the **Constrain** panel and select the left circle. Place the dimension on the left of the sketch. In the **Edit Dimension** edit box, change the value of the diameter of the circle to **8** and press Enter.



Notice that because of the Equal constraint, the size of the right circle is automatically modified to match the dimension of the left circle. The final sketch for Tutorial 3 after drawing and dimensioning circles is shown in Figure 3-30.

Evaluation Copy. Do not reproduce. For information visit www.cadcim.com

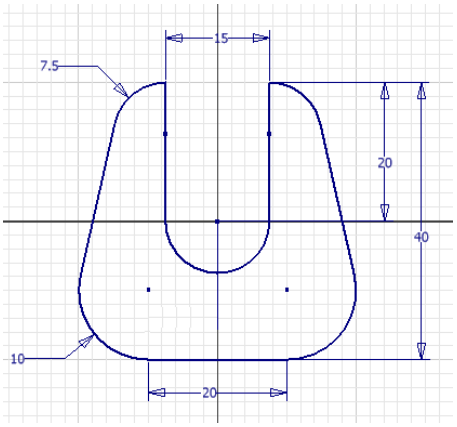

Figure 3-29 *Dimensioned sketch for Tutorial 1*

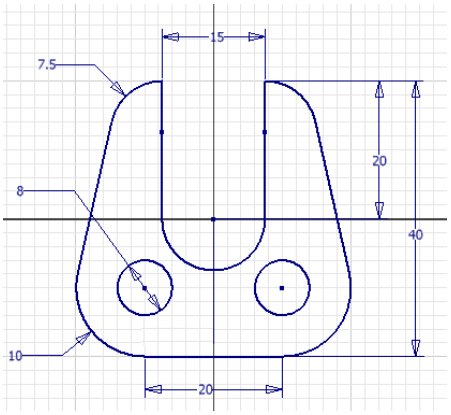

Figure 3-30 *The final dimensioned sketch for Tutorial 1*

Saving the Sketch

1. Choose the **Return** tool from the **Quick Access Toolbar** to exit the Sketching environment. Save this sketch with the name *Tutorial1* at the location given below: *C:\Inventor_2024/c03*





Note

*If the **Return** tool is not available in **Quick Access Toolbar**, you need to add this tool to the toolbar. To do so, choose the down arrow on the right of **Quick Access Toolbar**; a flyout is displayed. Next, choose the **Return** option from the flyout.*

2. Choose **Close > Close** from the **File** menu to close the file.

Tutorial 2

In this tutorial, you will draw the sketch of the model shown in Figure 3-31. The dimensions of the sketch are shown in Figure 3-32. After drawing the sketch, add constraints and then dimension it. The solid model is given for reference only. **(Expected time: 30 min)**

The following steps are required to complete this tutorial:

a. Start a new metric standard part file and invoke the Sketching environment.
b. Draw the outer loop of the sketch.
c. Add the required dimensions and constraints to the sketch.
d. Add the inner circle to the sketch and dimension it.
e. Save the sketch with the name *Tutorial2.ipt* and close the file.

Evaluation Copy. Do not reproduce. For information visit www.cadcim.com

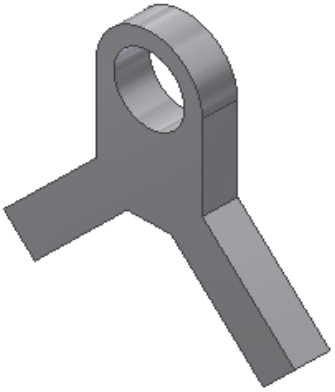

Figure 3-31 *Model for the sketch of Tutorial 2*

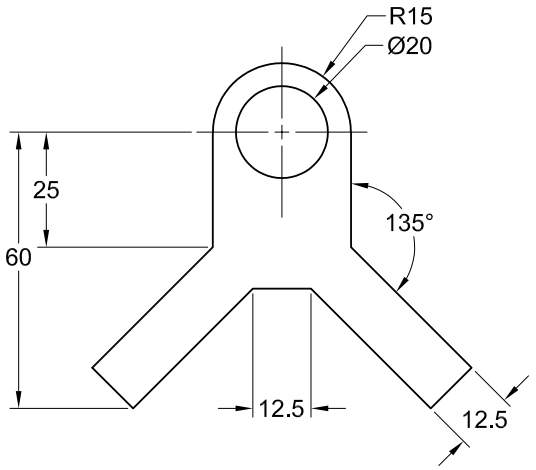

Figure 3-32 *The final dimensioned sketch for Tutorial 2*

Starting a New File and Invoking the Sketching Environment

1. Choose the **New** tool from the **Quick Access Toolbar** to display the **Create New File** dialog box. Start a new metric standard part file from the **Metric** tab of this dialog box.

2. Choose the **Start 2D Sketch** tool from the **Sketch** panel of the **3D Model** tab; the default planes are displayed and you are prompted to select the sketching plane.

3. Select the **XY Plane** (Front Plane) as the sketching plane from the graphics window; the Sketching environment is invoked and the **XY Plane** (Front Plane) becomes parallel to the screen.

Drawing the Outer Loop

1. Choose the **Line** tool from the **Create** panel of the **Sketch** tab to draw the outer loop, as shown in Figure 3-33. As mentioned earlier, you should draw the inner loop after drawing and dimensioning the outer loop. This is because once the outer loop is dimensioned, you can draw the inner loop by taking the reference of the outer loop.

You can draw the arc while the **Line** tool is active. You can also use the temporary tracking option to draw this sketch. For your reference, the geometries in the sketch are numbered, see Figure 3-33.

Evaluation Copy. Do not reproduce. For information visit www.cadcim.com

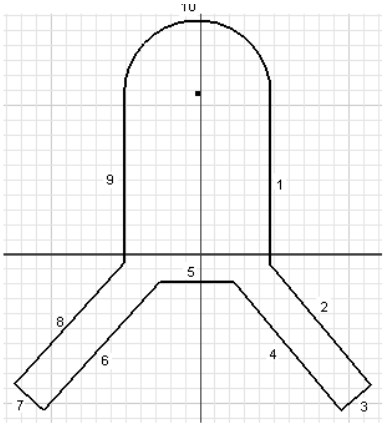

Figure 3-33 *Initial sketch with the geometries numbered*

Adding Constraints to the Outer Loop

1. Add the Equal constraint to lines 1 and 9, 2 and 8, 3 and 5, 5 and 7, and 4 and 6.

2. Add the Perpendicular constraint to lines 2 and 3 and 7 and 8.

3. Add the Horizontal constraint to the lower endpoints of lines 4 and 6.

4. Add the Tangent constraint to lines 1 and 9 with arc 10, if it is missing.

Dimensioning the Outer Loop

1. Choose the **Dimension** tool from the **Constrain** panel of the **Sketch** tab; you are prompted to select the geometry to dimension. Select line 9 and place the dimension on the left of the sketch. Modify the dimension value in the **Edit Dimension** edit box to **25** and press Enter.



2. Select the center of the arc and then the lower endpoint of line 6. Place the dimension on the left of the previous dimension. Modify the dimension value in the **Edit Dimension** edit box to **60** and press Enter.

3. Select line 3 and then right-click to display the Marking menu. Choose **Aligned** from the Marking menu and then place the dimension below the sketch. Modify the dimension value in the **Edit Dimension** edit box to **12.5** and press Enter.

   Notice that the length of lines 5 and 7 are also modified because of the Equal constraint.

4. Select lines 1 and 2 and then place the angular dimension on the right of the sketch. Modify the value of the angular dimension in the **Edit Dimension** edit box to **135** and press Enter.

5. Select arc 10 and then place the radius dimension above the sketch. Modify the value of the radius of the arc in the **Edit Dimension** edit box to **15** and press Enter.

Evaluation Copy. Do not reproduce. For information visit www.cadcim.com

With this, the required dimensions have been applied to the outer loop. Even after adding all dimensions, the color of entities in the sketch remains green.

Now, you can use the origin to fully constrain the initial sketch.

6. Choose the **Coincident Constraint** tool from the **Constrain** panel; you are prompted to select the first curve or point.

7. Select the center of the arc; you are prompted to select the second curve or point.

8. Select the origin. The entire sketch shifts itself such that the center of arc of the sketch is at the origin. After the sketch is shifted to a new place, it may not be visible completely in the drawing window.

9. Choose the **Zoom All** tool from the **Navigation Bar > Zoom** flyout to fit the sketch into the drawing window. You will notice that all the entities in the sketch turn purple, indicating that the sketch is fully constrained. Press the Esc key to exit the **Coincident Constraint** tool.

Drawing the Circle

1. Choose **Center Point Circle** from the **Create** panel of the **Sketch** tab; you are prompted to select the center of the circle.

2. Move the cursor close to the center of the arc; the cursor snaps to the center point and turns green. Select this point as the center of the circle and then move the cursor away from the center to size the circle. Specify a point to give it an approximate size.

Dimensioning the Circle

1. Choose **Dimension** from the **Constrain** panel of the **Sketch** tab and select the circle. Place the diameter dimension below the arc dimension. Enter **20** in the **Edit Dimension** edit box and then press Enter. This completes the sketch for Tutorial 4. The final dimensioned sketch is shown in Figure 3-34.

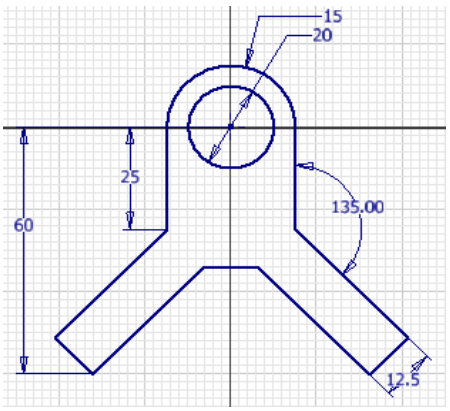

Figure 3-34 *The final dimensioned sketch for Tutorial 2*

Evaluation Copy. Do not reproduce. For information visit www.cadcim.com

Saving the Sketch

1. Choose the **Finish Sketch** option from the **Exit** panel of the **Sketch** tab to exit the sketching environment. Alternatively, choose the **Finish 2D Sketch** option from the Marking menu to exit the sketching environment

2. Save the sketch with the name *Tutorial2* at the location given below:

   C:\Inventor_2024\c03

3. Choose **Close > Close** from the **File** menu to close the file.

Self-Evaluation Test

Answer the following questions and then compare them to those given at the end of this chapter:

1. The _____ nature of Autodesk Inventor ensures that a selected entity is driven to a specified dimension value irrespective of its original size.

2. When you select a circle to be dimensioned, the _____ dimension is applied to it by default.

3. The _____ dimension has one arrowhead and is placed outside a circle or an arc.

4. The _____ dimension displays the distance between two selected line segments in terms of diameter and the distance shown is twice the original length.

5. The _____ tool is used to measure the radius of an arc.

6. A _____ constrained sketch is the one whose entities are completely constrained to their surroundings using constraints and dimensions.

7. The Perpendicular constraint forces a selected entity to become perpendicular to a specified entity. (T/F)

8. The Coincident constraint can be applied to two line segments. (T/F)

9. The Collinear constraint can only be applied to line segments. (T/F)

10. If an unnecessary constraint is applied to a sketch, Autodesk Inventor displays a message box informing that adding this constraint will over-constrain the sketch. (T/F)

Evaluation Copy. Do not reproduce. For information visit www.cadcim.com

Review Questions

Answer the following questions:

1. Which of the following tools is invoked to measure distance between two edges?

   (a) **Length** (b) **Distance**
   (c) **Minimum** (d) **Measure**

2. Which of the following dimensions is applied by default to an arc whenever it is dimensioned?

   (a) **Radius** (b) **Diameter**
   (c) **Linear** (d) **Linear Diameter**

3. In addition to lines, which of the following entities can be selected to apply the Collinear constraint?

   (a) Arc (b) Circle
   (c) Ellipse (d) Ellipse axis

4. Which of the following combinations of entities cannot be used to apply the Tangent constraint?

   (a) Line, line (b) Line, arc
   (c) Circle, circle (d) Arc, circle

5. You cannot apply the Concentric constraint between a point and a circle. (T/F)

6. You can use the Horizontal constraint or the Vertical constraint to line up arcs, circles, or ellipses in the respective horizontal or vertical direction. (T/F)

7. You can view all or some of the constraints applied to a sketch. (T/F)

8. There are twelve types of geometrical constraints that can be applied to the sketched entities. (T/F)

9. The linear dimensions are the dimensions that define the shortest distance between two points. (T/F)

10. A sketch in which the number of dimensions or constraints exceeds the required numbers is called as Over-constrained sketch. (T/F)

Evaluation Copy. Do not reproduce. For information visit www.cadcim.com

EXERCISES

Exercise 1

Draw the sketch of the model shown in Figure 3-35. The sketch to be drawn is shown in Figure 3-36. After drawing the sketch, add the required constraints to it and then dimension it. **(Expected time: 30 min)**

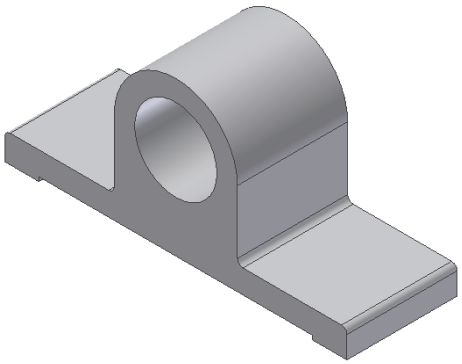

Figure 3-35 *Model for Exercise 1*

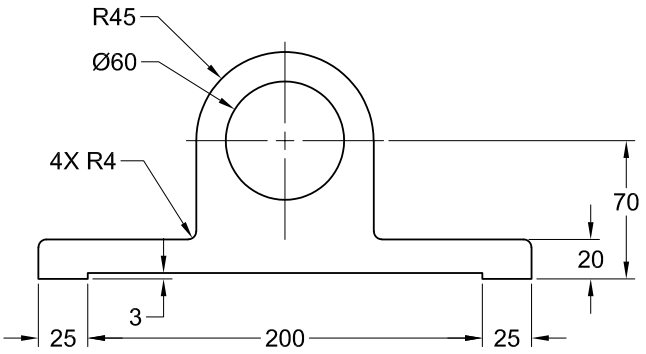

Figure 3-36 *Sketch for Exercise 1*

Exercise 2

Draw the sketch of the model shown in Figure 3-37. The sketch to be drawn is shown in Figure 3-38. After drawing the sketch, add the required constraints to it and then dimension it. **(Expected time: 30 min)**

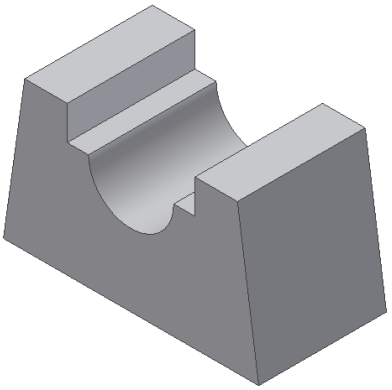

Figure 3-37 *Model for Exercise 2*

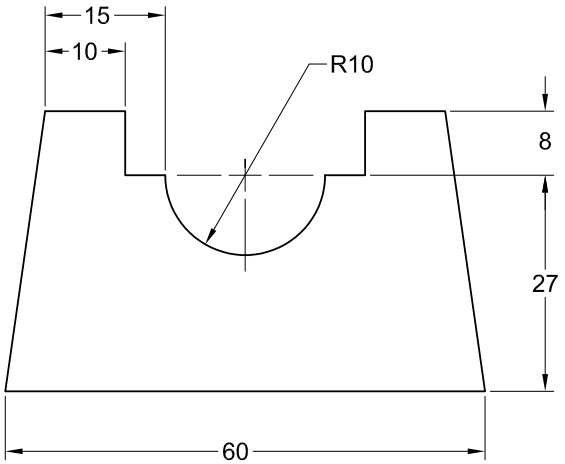

Figure 3-38 *Sketch for Exercise 2*

Evaluation Copy. Do not reproduce. For information visit www.cadcim.com

Exercise 3

Draw the sketch of the model shown in Figure 3-39. The sketch to be drawn is shown in Figure 3-40. After drawing the sketch, add the required constraints to it and then dimension it.

(Expected time: 30 min)

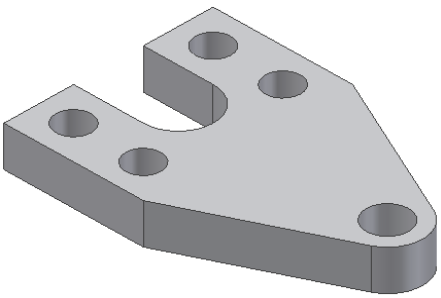

Figure 3-39 *Model for Exercise 3*

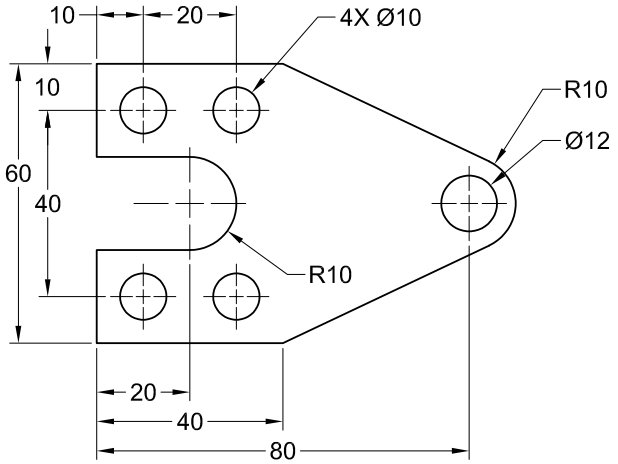

Figure 3-40 *Sketch for Exercise 3*

Exercise 4

Draw the sketch of the model shown in Figure 3-41. The sketch to be drawn is shown in Figure 3-42. After drawing the sketch, add required constraints to it and then dimension it.

(Expected time: 30 min)

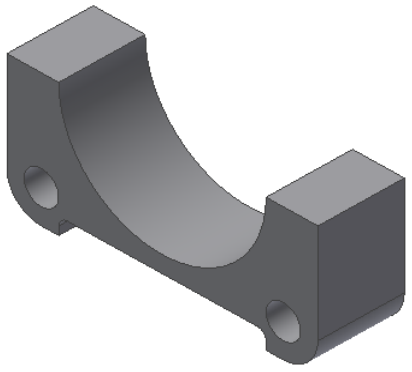

Figure 3-41 *Model for Exercise 4*

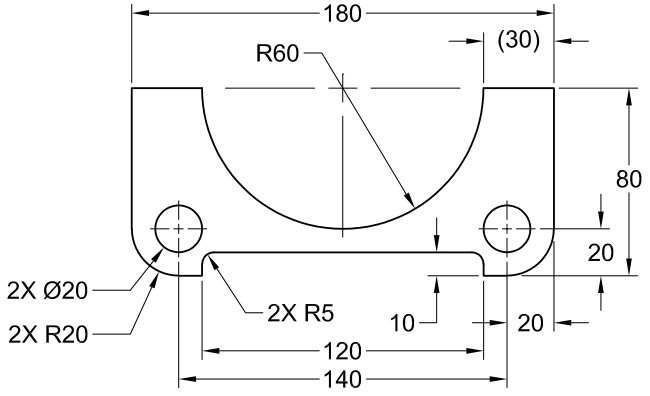

Figure 3-42 *Sketch for Exercise 4*

Answers to Self-Evaluation Test

1. parametric, **2.** diameter, **3.** radius, **4.** linear diameter, **5. Measure**, **6.** fully, **7.** T, **8.** F, **9.** F, **10.** T

Evaluation Copy. Do not reproduce. For information visit www.cadcim.com