Chapter 19

Isometric Drawings

Learning Objectives

After completing this chapter, you will be able to:

- *Understand isometric drawings, isometric axes, and isometric planes*
- *Set isometric grid and snap*
- *Draw isometric circles in different isoplanes*
- *Dimension isometric objects*
- *Write text in isometric styles*

Key Terms

- *Isometric Planes*
- *Isometric Axes*
- *Isometric Snap*
- *Isometric Grid*
- *Iso Circles*
- *Isometric Text*

ISOMETRIC DRAWINGS

Isometric drawings are generally used to help visualize the shape of an object. For example, if you are given the orthographic views of an object, as shown in Figure 19-1, it takes time to put information together to visualize the shape. However, if an isometric drawing is given, as shown in Figure 19-2, it is much easier to understand the shape of the object. Thus, isometric drawings are widely used in industry to help in understanding products and their features.

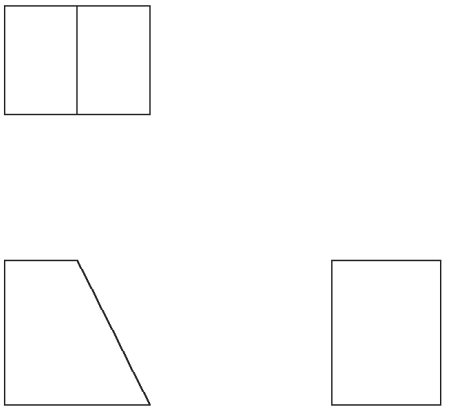

Figure 19-1 *Orthographic views of an object*

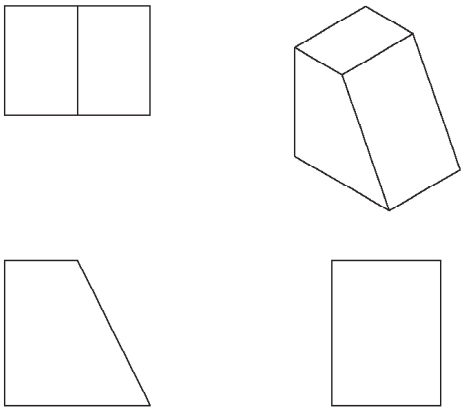

Figure 19-2 *Orthographic views with an isometric drawing*

An isometric drawing should not be confused with a three-dimensional (3D) drawing. An isometric drawing is just a two-dimensional (2D) representation of a 3D drawing on a 2D plane. A 3D drawing is the 3D model of an object on the X, Y, and Z axes. In other words, an isometric drawing is a 3D drawing on a 2D plane, whereas a 3D drawing is a true 3D model of the object. The model can be rotated and viewed from any direction. A 3D model can be a wireframe model, surface model, or solid model.

ISOMETRIC PROJECTIONS

The word "isometric" means equal measurement. The angle between any of the two principal axes of an isometric drawing is 120 degrees, refer to Figure 19-3. An isometric view is obtained by rotating the object by 45 degree angle around the imaginary vertical axis, and then tilting the object forward through a 35°16' angle. If you project the points and edges on the front plane, the projected length of the edges will be approximately 82 percent (isometric length/actual length = 9/11), which is shorter than the actual length of the edges. However, isometric drawings are always drawn to a full scale because their purpose is to help the user visualize the shape of the object. Isometric drawings are not meant to describe the actual size of the object. The actual dimensions, tolerances, and feature symbols must be shown in the orthographic views. Also, you should avoid showing any hidden lines in the isometric drawings, unless they show an important feature of the object or help in understanding its shape.

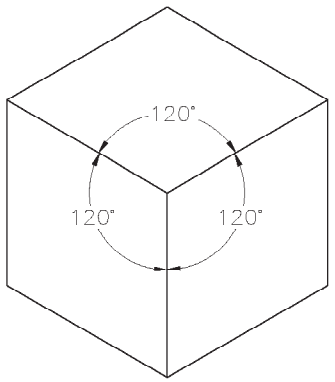

Figure 19-3 *Principal axes of an isometric drawing*

ISOMETRIC AXES AND PLANES

Isometric drawings have three axes: right horizontal axis (P0,P1), vertical axis (P0,P2), and left horizontal axis (P0,P3). The two horizontal axes are inclined at 30 degrees to the horizontal or X axis (X1,X2). The vertical axis is at 90 degrees, as shown in Figure 19-4.

When you draw an isometric drawing, the horizontal object lines are drawn along or parallel to the horizontal axis. Similarly, the vertical lines are drawn along or parallel to the vertical axis. For example, to make an isometric drawing of a rectangular block, the vertical edges of the block are drawn parallel to the vertical axis. The horizontal edges on the right side of the block are drawn parallel to the right horizontal axis (P0,P1), and the horizontal edges on the left side of the block are drawn parallel to the left horizontal axis (P0,P3). It is important to remember that the angles do not appear true in isometric drawings. Therefore, the edges or surfaces that are at an angle are drawn by locating their endpoints. The lines that are parallel to the isometric axes are called isometric lines. The lines that are not parallel to the isometric axes are called non isometric lines.

Similarly, the planes can be isometric planes or non isometric planes.

Isometric drawings have three principal planes, namely isoplane right, isoplane top, and isoplane left, as shown in Figure 19-5. The isoplane right (P0,P4,P10,P6) is defined by the vertical axis and the right horizontal axis. The isoplane top (P6,P10,P9,P7) is defined by the right and left horizontal axes. Similarly, the isoplane left (P0,P6,P7,P8) is defined by the vertical axis and the left horizontal axis.

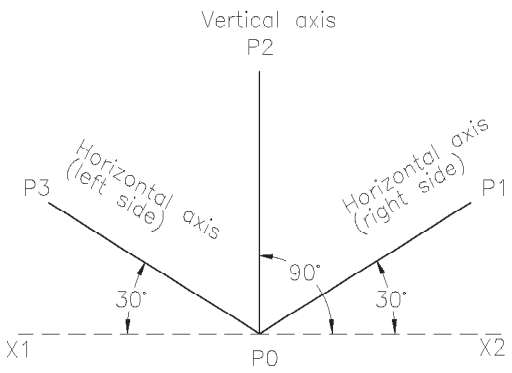

Figure 19-4 *Isometric axes*

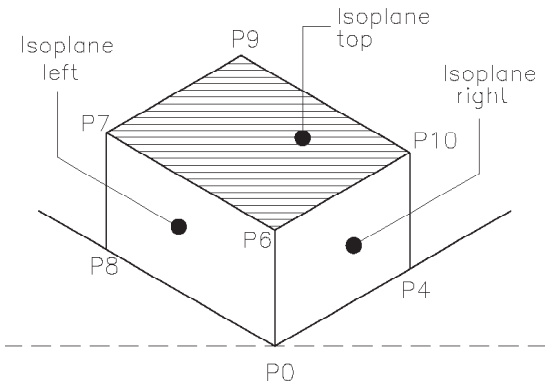

Figure 19-5 *Isometric planes*

SETTING THE ISOMETRIC GRID AND SNAP

You can use the **SNAP** command to set the isometric grid and snap. The isometric grid lines are displayed at 30 degree angle to the horizontal axis. Also, the distance between the grid lines is determined by the vertical spacing which can be specified by using the **GRID** or **SNAP** command. The grid lines coincide with three isometric axes which make it easier to create isometric drawings. The following command sequence and Figure 19-6 illustrate the use of the **SNAP** command to set the isometric grid and snap of 0.5 unit:

Command: **SNAP**
Specify snap spacing or [ON/OFF/Aspect/Legacy/Style/Type] <0.5000>: **S**
Enter snap grid style [Standard/Isometric] <S>: **I**
Specify vertical spacing <0.5000>: *Enter a new snap distance.*



Note

*1. When you use the **SNAP** command to set the isometric grid, the grid lines may not be displayed. To display the grid lines, turn the grid on by choosing the **Grid Display** button from the Status Bar or press F7.*

2. You cannot set the aspect ratio for the isometric grid. Therefore, the spacing between the isometric grid lines will be the same.

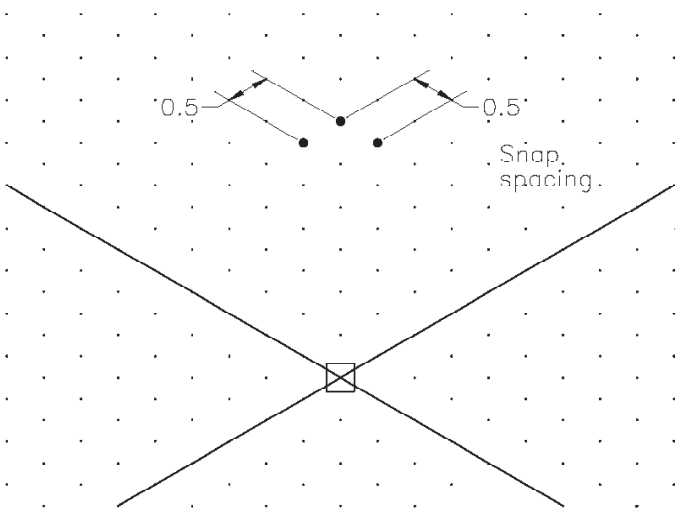

Figure 19-6 *Setting the isometric grid and snap in dotted grid*

You can also set the isometric grid and snap by using the **Drafting Settings** dialog box shown in Figure 19-7. You can invoke this dialog box by right-clicking on **SNAPMODE**, **GRIDMODE**, **Polar Tracking**, **Object Snap**, **3D Object Snap**, **Object Snap Tracking**, **Dynamic Input**, **Quick Properties**, or **Selection Cycling** button available in the Status Bar and then choosing **Settings** from the shortcut menu displayed. You can also invoke this dialog box by entering **DSETTINGS** at the Command prompt.

The isometric snap and grid functions can be turned on/off by choosing the **Grid On (F7)** check box located in the **Snap and Grid** tab of the **Drafting Settings** dialog box. The **Snap and Grid** tab also contains the radio buttons to set the snap type and style. To display the grid on the screen, make sure the grid is turned on.

When you set the isometric grid, the display of crosshairs also changes. The crosshairs are displayed at an isometric angle and their orientation depends on current isoplane. You can toggle between isoplane right, isoplane left, and isoplane top by pressing the CTRL and E keys (CTRL+E) simultaneously or by using the function key, F5. You can also toggle among different isoplanes by using the **Drafting Settings** dialog box or by entering the **ISOPLANE** command at the Command prompt:

Command: **ISOPLANE**
Enter isometric plane setting [Left/Top/Right] <Top>: **T**
Current Isoplane: **Top**

The Ortho mode is useful when drawing in the Isometric mode. In the Isometric mode, Ortho aligns with the axes of the current isoplane.

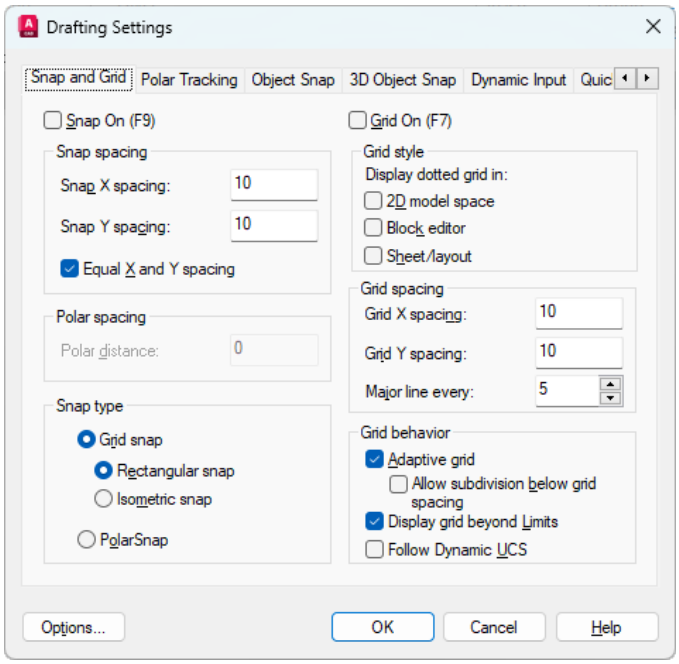

Figure 19-7 *The **Drafting Settings** dialog box*

Example 1 — *Isometric Drawing*

In this example, you will create the isometric drawing shown in Figure 19-8.

1. Use the **SNAP** command to set the isometric grid and snap. The snap value is 0.5 unit.

   Command: **SNAP**
   Specify snap spacing or [ON/OFF/Aspect/Legacy/Style/Type] <0.5000>: **S**
   Enter snap grid style [Standard/Isometric] <S>: **I**
   Specify vertical spacing <0.5000>: **0.5** (*or press ENTER*)

2. Change the isoplane to the isoplane left by pressing the F5 key. Choose the **Line** tool and draw lines between the points P1, P2, P3, P4, and P1, as shown in Figure 19-9.



Tip
*You can increase the size of the crosshairs using the **Crosshair size** slider bar in the **Display** tab of the **Options** dialog box.*

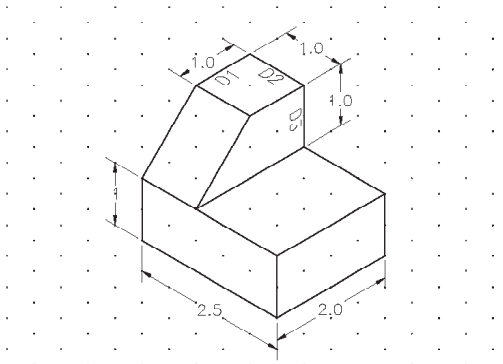

Figure 19-8 *Isometric drawing for Example 1*

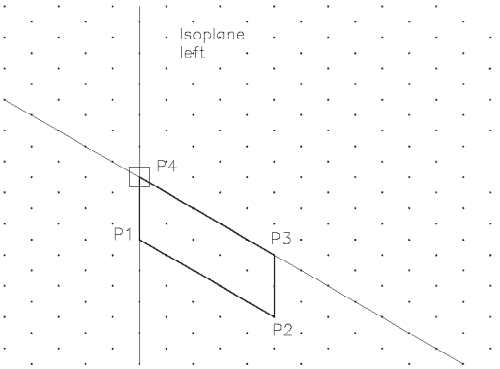

Figure 19-9 *Drawing the bottom left face*

3. Change the isoplane to the isoplane right by pressing the F5 key. Invoke the **Line** tool and draw the lines, as shown in Figure 19-10.

4. Change the isoplane to the isoplane top by pressing the F5 key. Invoke the **Line** tool and draw the lines, refer to Figure 19-11.

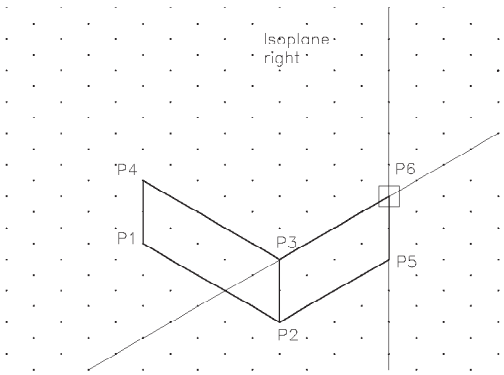

Figure 19-10 *Drawing the bottom right face*

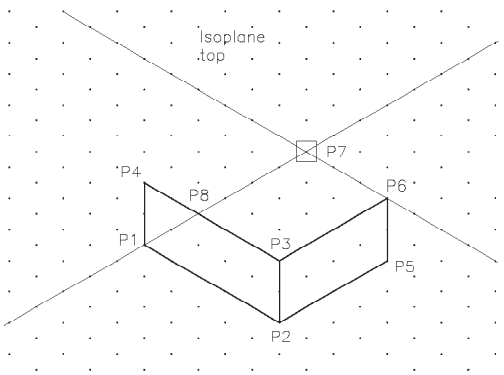

Figure 19-11 *Drawing the top face*

5. Similarly, draw the remaining lines, refer to Figure 19-12.

6. The front left end of the object is tapered at an angle. In isometric drawings, oblique surfaces (surfaces at an angle to the isometric axis) cannot be drawn like other lines. Make sure that the Endpoint Object Snap is on, and then locate the endpoints of the lines that define the oblique surface. Next, draw the lines between those points. To complete the drawing shown in Figure 19-8, draw a line from P10 to P8 and from P11 to P4, refer to Figure 19-13.

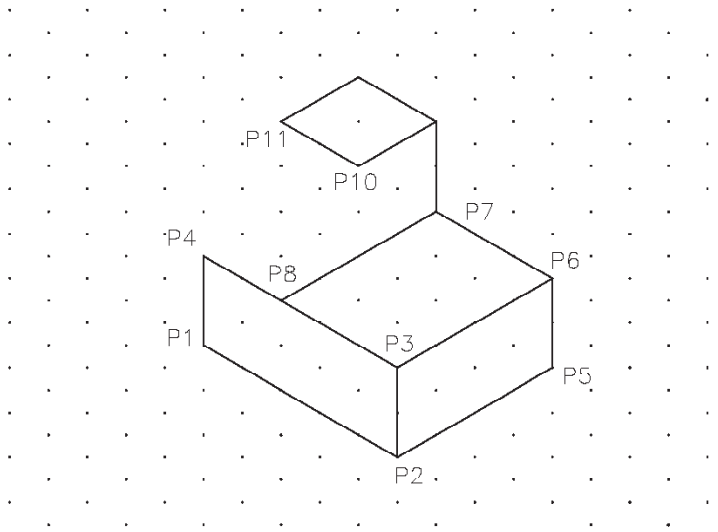

Figure 19-12 *Drawing the remaining lines*

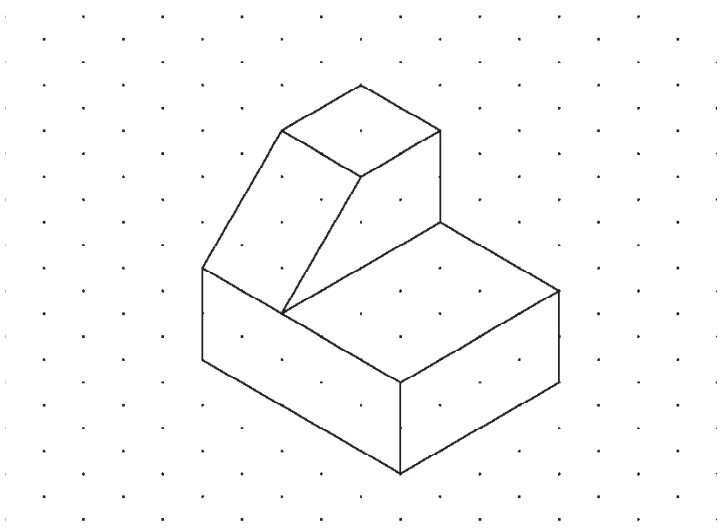

Figure 19-13 *Isometric drawing with the tapered face*

DRAWING ISOMETRIC CIRCLES

The isometric circles are drawn by using the tools available in the **Ellipse** drop-down and then selecting the **Isocircle** option. To draw an isometric circle, choose the **Axis**, **End**, or **Elliptical Arc** tool from the **Ellipse** drop-down. As soon as you select any of these options, the **Isocircle** option will be available in the Command prompt. Select the **Isocircle** option from the Command prompt; you will be prompted to specify the center of isocircle. Specify the center of the isocircle; you will be prompted to specify the radius of the isocircle. Once you specify the radius and press enter, isocircle will be created.

Note that you must have the Isometric Snap on while using the Ellipse tools to display the **Isocircle** option. If the isometric snap is not ON, you cannot draw an isometric circle. Before

entering the radius or diameter of the isometric circle, you must make sure that you are in the required isoplane.

For example, to draw a circle in the right isoplane, you must toggle through the isoplanes until the required isoplane (right isoplane) is displayed. You can also set the required isoplane as the current plane before choosing the **Ellipse** tool. The crosshairs and the shape of the isometric circle will automatically change as you toggle through different isoplanes. As you enter the radius or diameter of the circle, AutoCAD LT draws the isometric circle in the selected plane, refer to Figure 19-14.

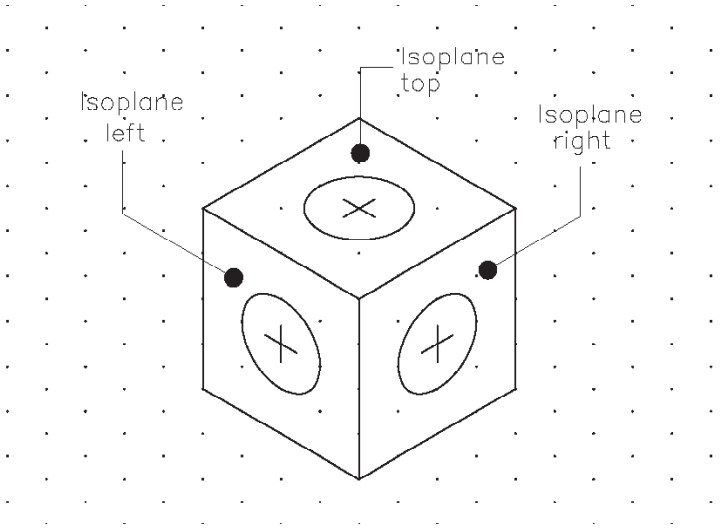

Figure 19-14 *Isometric circles drawn*

The prompt sequence used to draw an isometric circle after choosing the **Axis, End** tool from the **Ellipse** drop-down is as follows:

Specify axis endpoint of ellipse or [Arc/Center/Isocircle]: **I**
Specify center of isocircle: *Select a point.*
Specify radius of isocircle or [Diameter]: *Enter circle radius,* Enter

Creating Fillets in Isometric Drawings

To create fillets in isometric drawings, you first need to create an isometric circle and then trim its unwanted portion. Remember that there is no other method to directly create an isometric fillet.

Dimensioning Isometric Objects

Isometric dimensioning involves two steps: (1) dimensioning the drawing using the standard dimensioning tools, (2) editing the dimensions to change them to oblique dimensions.

Example 2 *Dimensioning*

The following example illustrates the process involved in dimensioning an isometric drawing. In this example, you will dimension the isometric drawing created in Example 1.

1. Dimension the drawing given in Example 1, as shown in Figure 19-15. You can use the aligned or linear dimensions to dimension the drawing. Remember that when you select the points, you must use the **Intersection** or **Endpoint** object snap to snap the endpoints of the object you are dimensioning. AutoCAD LT automatically leaves a gap between the object line and the extension line, as specified by the **DIMGAP** variable.

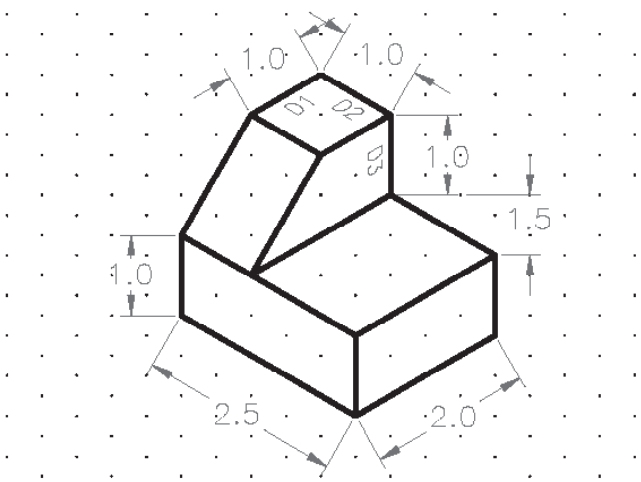

Figure 19-15 *The dimensioned isometric drawing before using the* ***Oblique*** *tool*

2. The next step is to edit the dimensions. You can choose the **Oblique** tool from the **Dimensions** panel of the **Annotate** tab. After selecting the dimension that you want to edit, you are prompted to enter the oblique angle. The oblique angle is determined by the angle that the extension line of the isometric dimension makes with the positive *X* axis. The following prompt sequence is displayed when you invoke this option from the **Ribbon**:

   Select objects: *Select the dimension (D1).*
   Select objects: *Press ENTER.*
   Enter oblique angle (Press ENTER for none): **150**

For example, the extension line of the dimension labeled D1 makes a 150 degree angle with the positive X axis, refer to Figure 19-16(a), therefore, the oblique angle is 150 degrees. Similarly, the extension lines of the dimension labeled D2 and D3 make a 30 degree angle with the positive X axis, refer to Figure 19-16(b) and (c), therefore, the oblique angle is 30 degrees. After you edit all dimensions, the drawing should appear as shown in Figure 19-17.

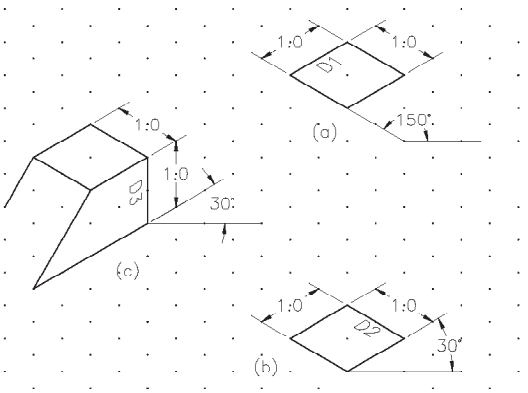

Figure 19-16 *Determining the oblique angle*

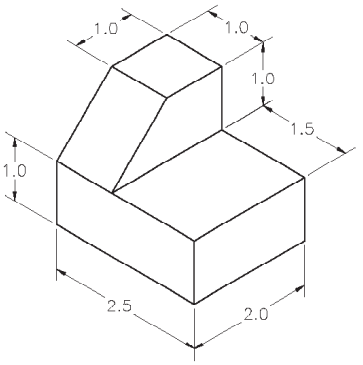

Figure 19-17 *Object with isometric dimensions*

ISOMETRIC TEXT

You cannot use regular text when placing the text in an isometric drawing because the text in an isometric drawing is obliqued at a positive or negative 30 degree angle. Therefore, you must create two text styles with oblique angles of positive 30 degrees and negative 30 degrees. You can use the **-STYLE** command or the **Text Style** dialog box to create a new text style. Figure 19-18 shows the **Text Style** dialog box with a new text style, **ISOTEXT1** and its corresponding values.

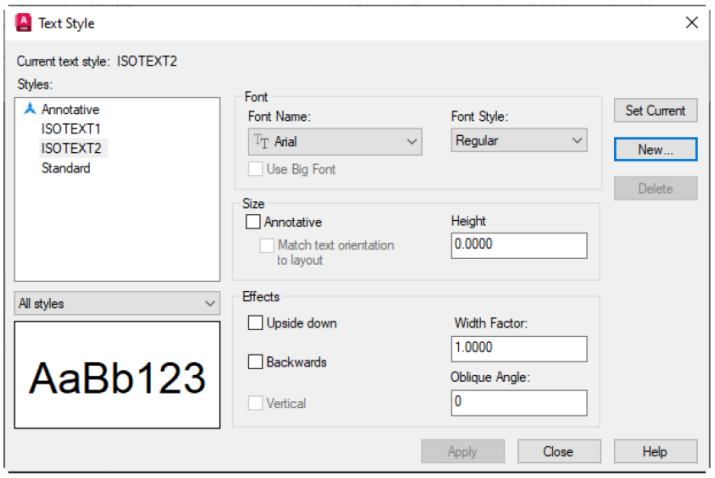

Figure 19-18 *The **Text Style** dialog box*

Similarly, you can create another text style, **ISOTEXT2**, with a negative 30 degrees oblique angle. When you place the text in an isometric drawing, you must also specify the rotation angle for the text. The text style and the text rotation angle depend on the placement of the text in the isometric drawing, as shown in Figure 19-19.

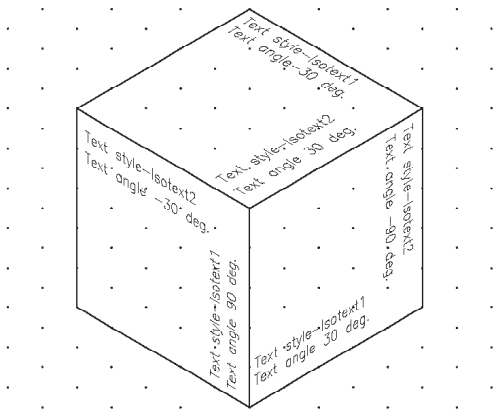

Figure 19-19 *Text style and rotation angle for isometric text*

Self-Evaluation Test

Answer the following questions and then compare them to those given at the end of this chapter:

1. The word "isometric" means _____. The three angles between the three principal axes of an isometric drawing measure _____ degree each.

2. The ratio of isometric length to the actual length in an isometric drawing is approximately _____.

3. The angle between the right isometric horizontal axis and the X axis is _____ degree.

4. Isometric drawings have three principal planes: isoplane right, isoplane top, and _____.

5. To toggle among isoplane right, isoplane left, and isoplane top, you can use _____ key combination or _____ function key.

6. The lines that are not parallel to the isometric axes are called _____.

7. You can only use the aligned dimension option to dimension an isometric drawing. (T/F)

8. The isometric snap must be turned on to display the **Isocircle** option while using the **Ellipse** tool. (T/F)

9. While placing text in an isometric drawing, you need to specify the rotation angles. (T/F)

10. You should avoid showing any hidden lines in isometric drawings. (T/F)

Review Questions

Answer the following questions:

1. Isometric drawings are generally used to help in _____ the shape of an object.

2. An isometric view is obtained by rotating an object by _____ degree around the imaginary vertical axis and then tilting the object forward through a _____ angle.

3. The isometric snap and grid can be turned on/off by selecting the _____ check box.

4. Isometric drawings have three axes: right horizontal axis, vertical axis, and _____.

5. The lines parallel to the isometric axis are called _____.

6. You can use the _____ command to set the isometric grid and snap.

7. Isometric grid lines are displayed at _____ degrees to the horizontal axis.

8. You can also set the isometric grid and snap by using the **Drafting Settings** dialog box, which can be invoked by entering _____ at the Command prompt.

9. Isometric circles are drawn by using the Ellipse tools and then selecting the _____ option.

10. To place text in an isometric drawing, you must create two text styles with oblique angles of _____ degree and _____ degree.

11. You should avoid showing hidden lines in isometric drawings unless they help in understanding its shape. (T/F)

12. Angles do not appear true in isometric drawings. (T/F)

13. You can set the aspect ratio for the isometric grid. (T/F)

14. You can draw an isometric circle without turning the isometric snap on. (T/F)

15. Only the aligned dimensions can be edited to change them to oblique dimensions. (T/F)

EXERCISES 1 through 4

Draw the following isometric drawings, refer to Figures 19-20 through 19-23. The dimensions can be determined by counting the number of grid lines. The distance between the isometric grid lines is assumed to be 0.5 unit. Dimension the drawing, as shown in Figure 19-23.

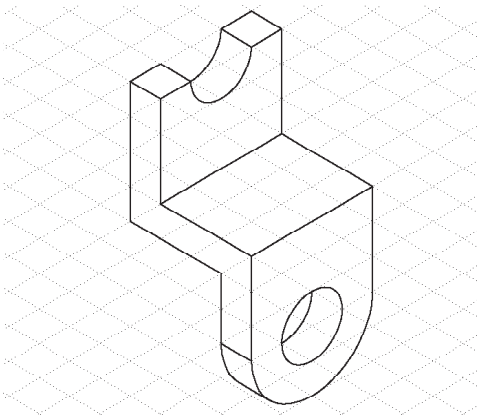

Figure 19-20 *Drawing for Exercise 1*

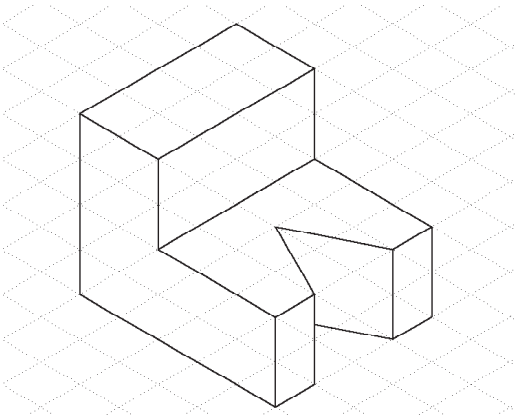

Figure 19-21 *Drawing for Exercise 2*

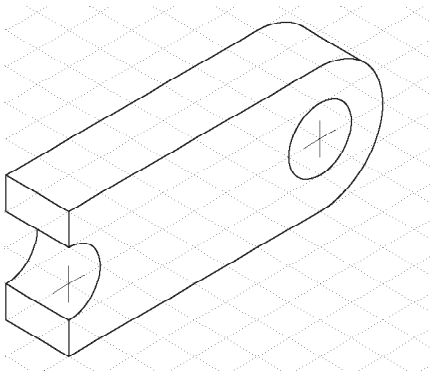

Figure 19-22 *Drawing for Exercise 3*

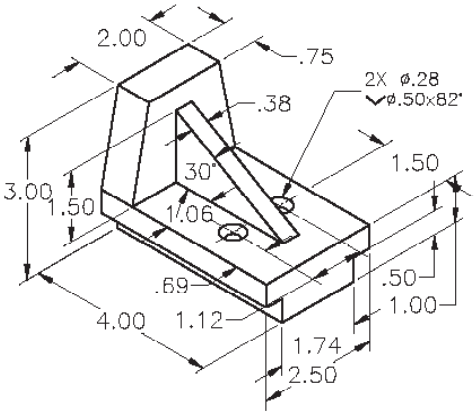

Figure 19-23 *Drawing for Exercise 4*

Answers to Self-Evaluation Test

1. equal measurement, 120, **2.** 9/11, **3.** 30, **4.** isoplane left, **5.** CTRL+E, F5, **6.** non isometric lines, **7.** T, **8.** T, **9.** F, **10.** T