Chapter 2

Sketching, Dimensioning, and Creating Base Features and Drawings

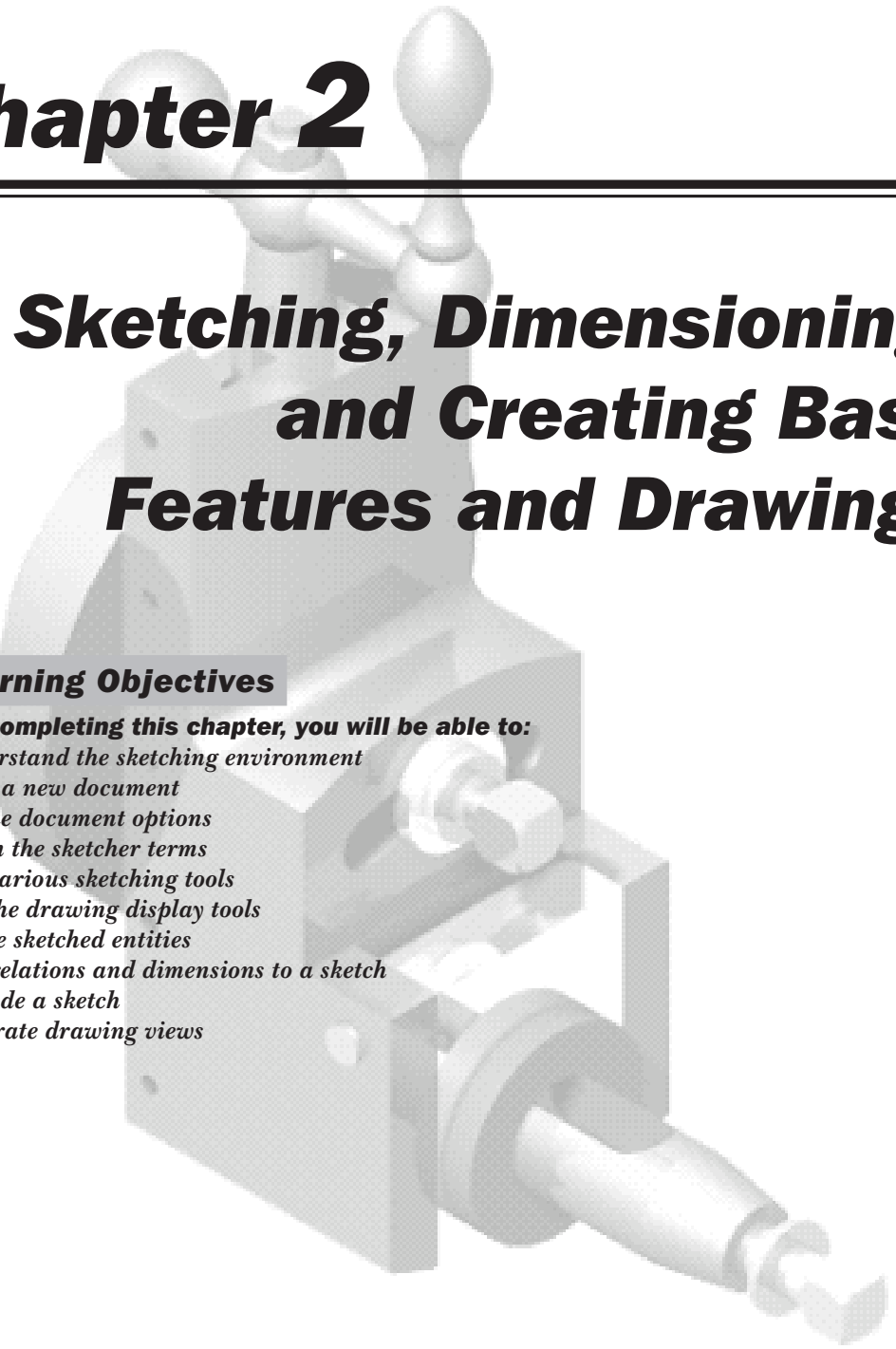

Learning Objectives

After completing this chapter, you will be able to:

- *Understand the sketching environment*
- *Start a new document*
- *Set the document options*
- *Learn the sketcher terms*
- *Use various sketching tools*
- *Use the drawing display tools*
- *Delete sketched entities*
- *Add relations and dimensions to a sketch*
- *Extrude a sketch*
- *Generate drawing views*

THE SKETCHING ENVIRONMENT

Most of the products designed by using SOLIDWORKS are a combination of sketched, placed, and derived features. The placed and derived features are created without drawing a sketch, but the sketched features require a sketch to be drawn first. Generally, the base feature of any design is a sketched feature and is created using the sketch. Therefore, while creating any design, the first and foremost requirement is to draw a sketch for the base feature. Once you have drawn the sketch, you can convert it into the base feature and then add the other sketched, placed, and derived features to complete the design. In this chapter, you will learn to create the sketch for the base feature using various sketching tools.

In general terms, a sketch is defined as the basic contour for a feature. For example, consider the solid model of a spanner shown in Figure 2-1.



Figure 2-1 *Solid model of a spanner*

This spanner consists of a base feature, cut feature, mirror feature (cut on the back face), fillets, and an extruded text feature. The base feature of this spanner is shown in Figure 2-2. It is created using a single sketch drawn on the **Front Plane**, refer to Figure 2-3. This sketch is drawn in the sketching environment using various sketching tools. Therefore, to draw the sketch of the base feature, you first need to invoke the sketching environment where you will draw the sketch.

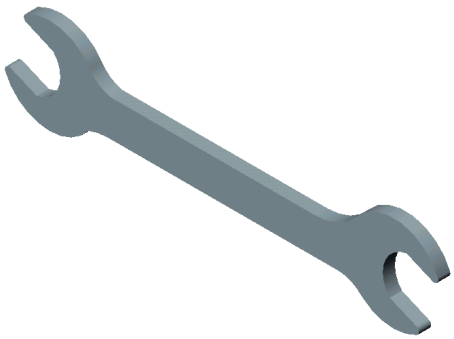

Figure 2-2 *Base feature of the spanner*

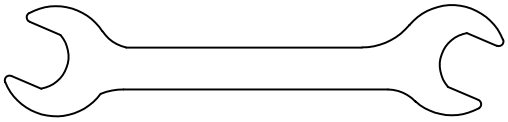

Figure 2-3 *Sketch for the base feature of the spanner*

Note

Once you are familiar with various options of SOLIDWORKS, you can also use a derived feature or a derived part as the base feature.

The sketching environment of SOLIDWORKS can be invoked anytime in the **Part** or **Assembly** mode. You just have to specify that you need to draw the sketch of a feature and then select the plane on which you need to draw the sketch.

Evaluation Copy. Do not reproduce. For information visit www.cadcim.com

STARTING A NEW SESSION OF SOLIDWORKS 2023

Double-click on the **SOLIDWORKS 2023** icon; the **SOLIDWORKS 2023** window will be displayed. If you are starting the SOLIDWORKS application for the first time after installing it, the **SOLIDWORKS License Agreement** dialog box will be displayed. Choose **Accept** from this dialog box; the **SOLIDWORKS** interface window along with the **Welcome - SOLIDWORKS** dialog box will be displayed, as shown in Figure 2-4. Click anywhere in **SOLIDWORKS 2023** window to collapse the **Welcome - SOLIDWORKS** dialog box.

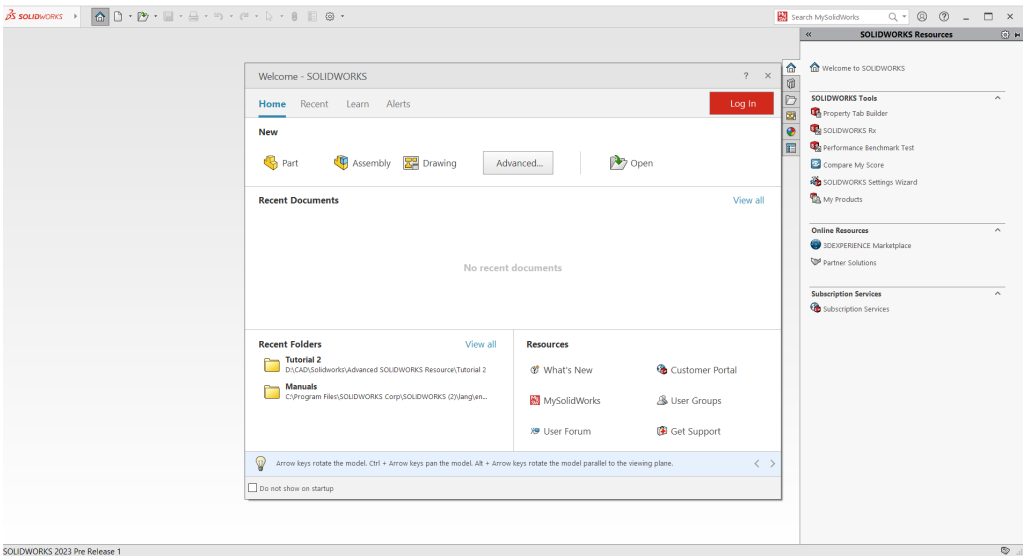

Figure 2-4 *The* ***SOLIDWORKS*** *window*

TASK PANES

In SOLIDWORKS, the task panes are displayed on the right of the window. These task panes contain various options that are used to start a new file, open an existing file, browse the related links of SOLIDWORKS, and so on. Various task panes in SOLIDWORKS are shown in Figure 2-5 and are discussed next.



Figure 2-5 *Various task panes in SOLIDWORKS*

SOLIDWORKS Resources Task Pane



SOLIDWORKS Resources task pane contains various rollouts that have options for accessing resources. It can be invoked by clicking on the icon. The rollouts and options available in this task pane are discussed next.

Welcome to SOLIDWORKS

This option is used to open the **Welcome - SOLIDWORKS** dialog box, refer to Figure 2-6. This dialog box provides a convenient way to open new and saved documents. It also provides access to various folders, SOLIDWORKS resources, and various technical news alerts related to SOLIDWORKS. It appears by default whenever you open a new session of SOLIDWORKS.

Evaluation Copy. Do not reproduce. For information visit www.cadcim.com

However, if you select the **Do not show on startup** check box available at the bottom-left corner then from the next time it will not appear by default. There are four tabs available in this dialog box which are discussed next.

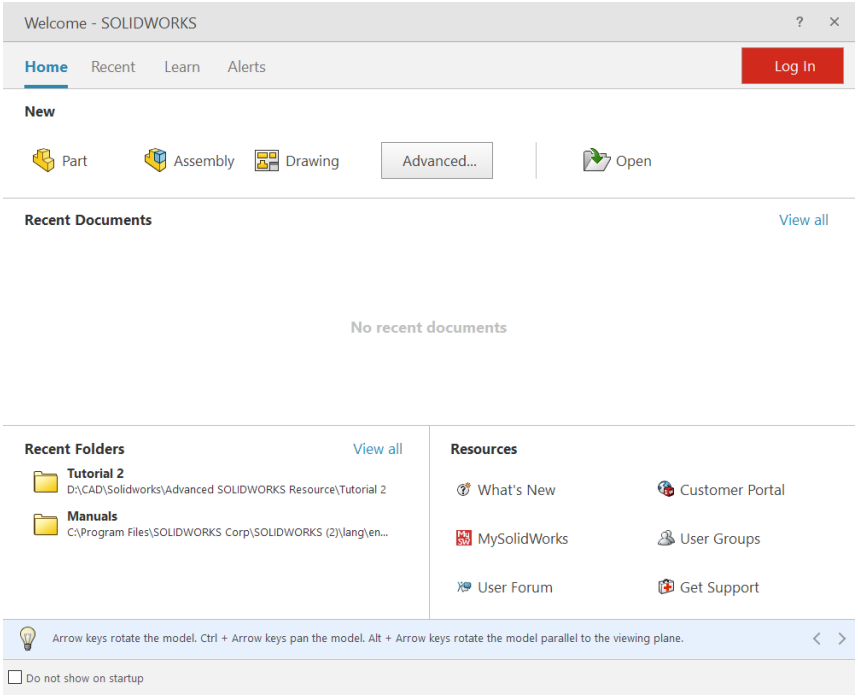

***Figure 2-6** The **Welcome - SOLIDWORKS** dialog box*

Home Tab

The **Home** tab is chosen by default and the options under this tab are used to open new and existing documents. This tab also provides access to recent documents and folders. Various resources like updates in the current version, user groups for discussion, technical support can be accessed using this tab.

Recent Tab

The **Recent** tab lists large number of recent documents and folders as compared to **Home** tab. You can also browse your saved files by using the **Browse** button available at the right in this tab.

Learn Tab

The **Learn** tab provides various resources to learn more about SOLIDWORKS through PDF files and tutorials for practical approach.

Alerts Tab

The **Alert** tab lists various news and alerts regarding SOLIDWORKS.

Evaluation Copy. Do not reproduce. For information visit www.cadcim.com

SOLIDWORKS Tools Rollout

The options in this rollout are used for customizing the tab, diagnosing and troubleshooting SOLIDWORKS, performing system maintenance, checking performance test, saving and restoring the customization settings of SOLIDWORKS, and so on.

Online Resources Rollout

The options in this rollout are used to invoke the discussion forum of SOLIDWORKS, partner solutions, and manufacturing network.

Subscription Services Rollout

The options in this rollout are used to get direct access to the Dassault Systemes partner products website. This partner products website will help you to interact with the design partners and designers for various technical supports and tips.

Design Library Task Pane

The **Design Library** task pane is invoked by choosing the **Design Library** tab from the window. This task pane is used to browse the default **Design Library** and the toolbox components, and also to access the **3D ContentCentral** web site. Note that to access the **3D ContentCentral** website, your computer needs to be connected to the Internet. To access the toolbox components, you need to install **Toolbox** add-in in your computer.

File Explorer Task Pane



The **File Explorer** task pane is invoked by choosing the **File Explorer** tab from the window. This task pane is used to explore the files and folders that are saved in the hard disk of your computer.

View Palette Task Pane



The **View Palette** task pane is invoked by choosing the **View Palette** tab from the window. This task pane is used to drag and drop the drawing views into a drawing sheet. This is available only when you are in the drafting environment.

Appearances, Scenes, and Decals Task Pane



The **Appearances, Scenes, and Decals** task pane is used to change the appearance of model or display area. On choosing the **Appearances, Scenes, and Decals** tab from the window, you will notice three nodes, **Appearances(color)**, **Scenes**, and **Decals** in the **Appearances, Scenes, and Decals** task pane. The **Appearances(color)** node is used to change the appearance of model, the **Scenes** node is used to change the background of the graphics area, and the **Decals** node is used to apply decals to a model. To assign appearance to the model, expand the desired category node from the **Appearances** node. Next, select a sub-category; different appearances of the selected sub-category will be displayed at the bottom area of the window. Now, drag and drop the required appearance on the model in the graphics area by selecting and holding the left-mouse button; the **Appearance Target** palette will be displayed.

Evaluation Copy. Do not reproduce. For information visit www.cadcim.com

Select the required button from this palette to apply the selected appearance. You can change the properties of the appearance added by using the corresponding appearance PropertyManager. You will learn about this PropertyManager in later chapters.

To change the background of the graphics area, expand the **Scenes** node from the **Appearances, Scenes, and Decals** task pane and select a category; the preview of different backgrounds available for the selected category will be displayed. Drag and drop the background in the graphics area; the background of the graphics area will be changed. You can also click the down-arrow next to the **Apply Scene** button in the **View (Heads-Up)** toolbar and select an option from this toolbar to change the background of the drawing area.

Similarly, to apply an image as a decal, expand the **Decals** node and select the **logos** subnode; the default logos will be displayed. Drag and drop the image on the model; the **Decals PropertyManager** will be displayed. Set the properties in this PropertyManager and choose the **OK** button.

Custom Properties Task Pane



The **Custom Properties** task pane is displayed on choosing the **Custom Properties** tab from the window. This task pane is used to view the properties of the files. If you do not have a property template for the files, then you can create it by choosing the **Create now** button from the **Custom Properties** task pane. On choosing this button, the **Property Tab Builder 2023** window will be displayed. Set the properties in this window and save it. After saving the properties, you can view them in the **Custom Properties** task pane. To do so, choose **Tools > Options** from the SOLIDWORKS menus; the **System Options - General** dialog box will be displayed. Choose the **File Locations** option from this dialog box. The options related to the **File Locations** option will be displayed on the right of the dialog box. Select the **Custom Property Files** option from the **Show folders for** drop-down list. Next, browse the property template in the **Folders** area by choosing the **Add** button. Choose the **OK** button from the dialog box to exit. Now, you can view these properties in the **Custom Properties** task pane.



Tip

*To expand the task pane at any stage of the design cycle, choose any one of the tabs provided on the task pane. Choose the **Auto Show** button to pin the task pane. To collapse the task pane, click anywhere in the drawing area when the **Auto Show** button is not chosen.*



Note

In assemblies, you can assign properties to multiple parts at the same time.

Evaluation Copy. Do not reproduce. For information visit www.cadcim.com

STARTING A NEW DOCUMENT IN SOLIDWORKS 2023

To start a new document in SOLIDWORKS 2023, select the **Welcome to SOLIDWORKS** option from the **SOLIDWORKS Resources** task pane; the **Welcome - SOLIDWORKS** dialog box will be displayed, as shown in Figure 2-6. You can also invoke this dialog box by choosing the **Welcome to SOLIDWORKS** button from the Menu Bar. The options to start a new document using this dialog box are discussed next.

Part

The **Part** button is available in the **New** area of the **Home** tab in the **Welcome - SOLIDWORKS** dialog box. On choosing this button from the dialog box; the **Part** document will be invoked. In this mode, you can create solid models, surface models, or sheet metal components.

Assembly

Choose the **Assembly** button from the **Welcome - SOLIDWORKS** dialog box to start a new assembly document. In the assembly document, you can assemble the components created in the part documents. You can also create components or new layout in the assembly document.

Drawing

Choose the **Drawing** button from the **Welcome - SOLIDWORKS** dialog box to start a new drawing document. In a drawing document, you can generate or create the drawing views of the parts created in the part documents or the assemblies created in the assembly documents.

You can also start a new document using the **New SOLIDWORKS Document** dialog box. To invoke this dialog box choose the **New** button from the Menu Bar, the **New SOLIDWORKS Document** dialog box will be displayed, as shown in Figure 2-7. Choose the desired button and then the **OK** button to start a new document.

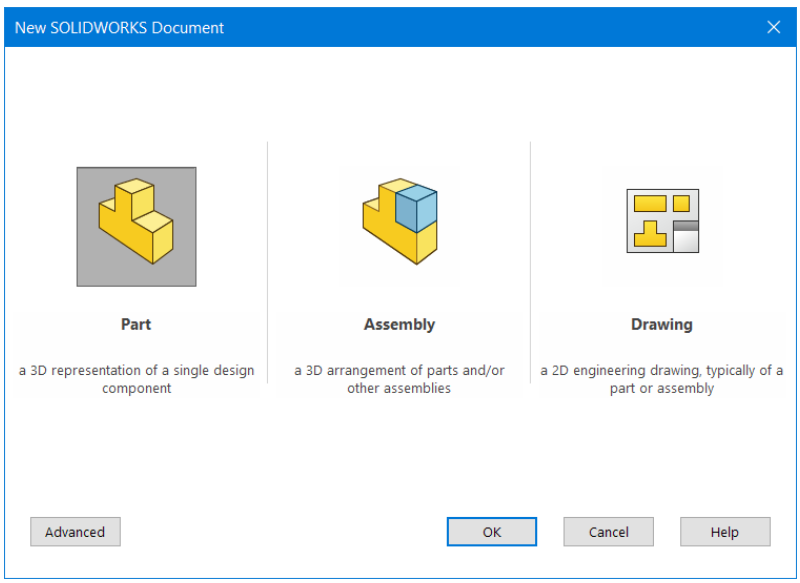

Figure 2-7 *The* ***New SOLIDWORKS Document*** *dialog box*

Evaluation Copy. Do not reproduce. For information visit www.cadcim.com

UNDERSTANDING THE SKETCHING ENVIRONMENT

Whenever you start a new part document, by default, you are in the part modeling environment. But you need to start the design by first creating the sketch of the base feature in the sketching environment. To invoke the sketching environment, choose the **Sketch** button from the **Sketch CommandManager** tab. For your convenience, you can add the **Sketch** button to the Menu Bar and invoke the sketching environment using this button. To do so, right-click on any toolbar and choose the **Customize** option from the shortcut menu; the **Customize** dialog box will be displayed. Choose the **Commands** tab and select the **Sketch** option from the **Toolbars** list box; all tools in the sketch categories will be displayed in the **Buttons** area. Press and hold the left mouse button on the **Sketch** button and then drag it to the Menu Bar. Click the **OK** button to exit the **Customize** dialog box. Figure 2-8 shows the **Sketch** button added to the Menu Bar.

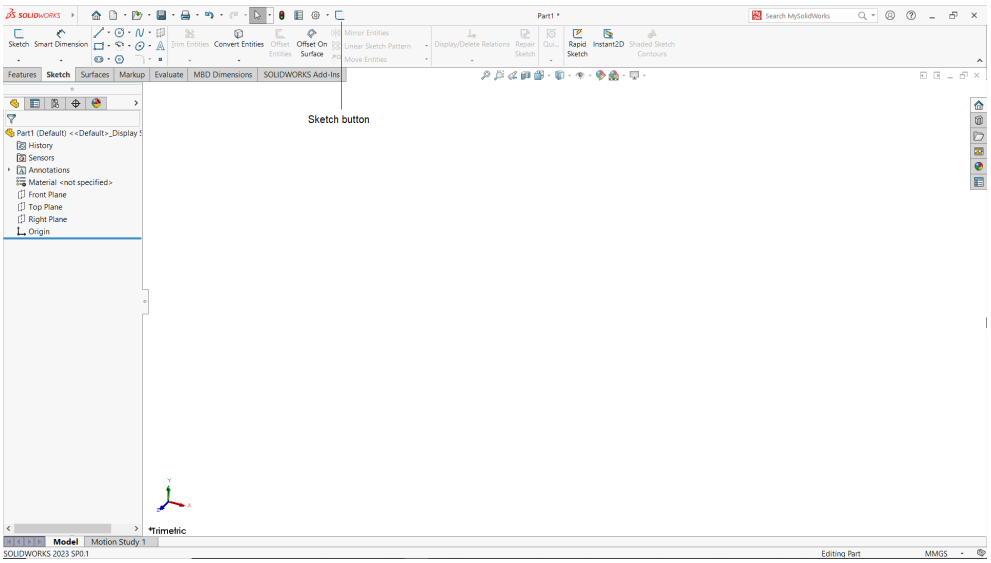

Figure 2-8 *SOLIDWORKS 2023 screen displaying the* ***Sketch*** *button in the Menu Bar*

When you choose the **Sketch** button from the Menu Bar or invoke any tool from the **Sketch CommandManager** tab, the **Edit Sketch PropertyManager** is displayed on the left in the drawing area and you are prompted to select the plane on which the sketch will be created. Also, the three default planes (Front Plane, Right Plane, and Top Plane) are temporarily displayed on the screen, as shown in Figure 2-9.

Evaluation Copy. Do not reproduce. For information visit www.cadcim.com

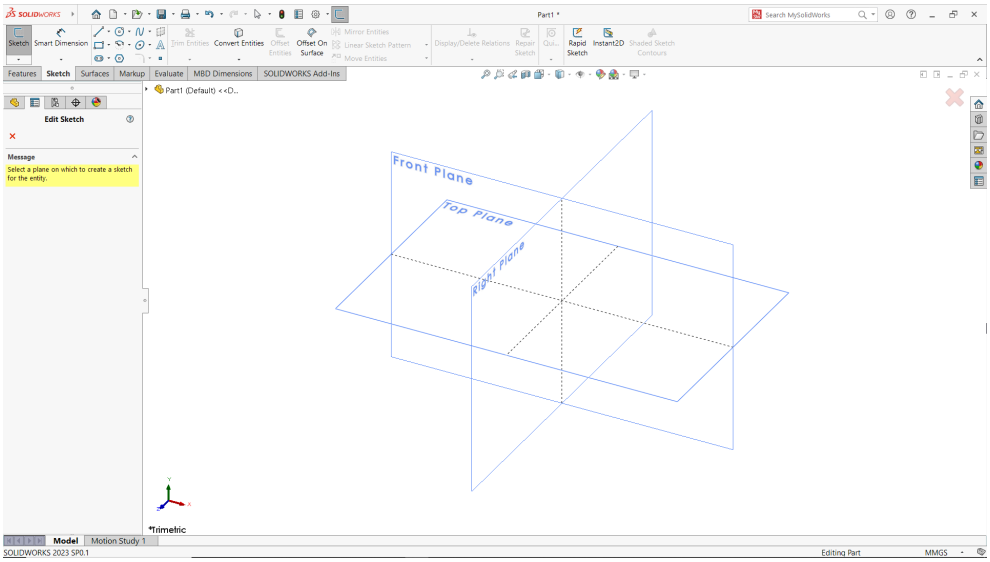

Figure 2-9 *The three default planes displayed on the screen*

You can select a plane to draw the sketch of the base feature depending on the requirement of the design. As soon as you select a plane, the **CommandManager** will display various sketching tools to draw the sketch.

The default screen appearance of a SOLIDWORKS part document in the sketching environment is shown in Figure 2-10.

Evaluation Copy. Do not reproduce. For information visit www.cadcim.com

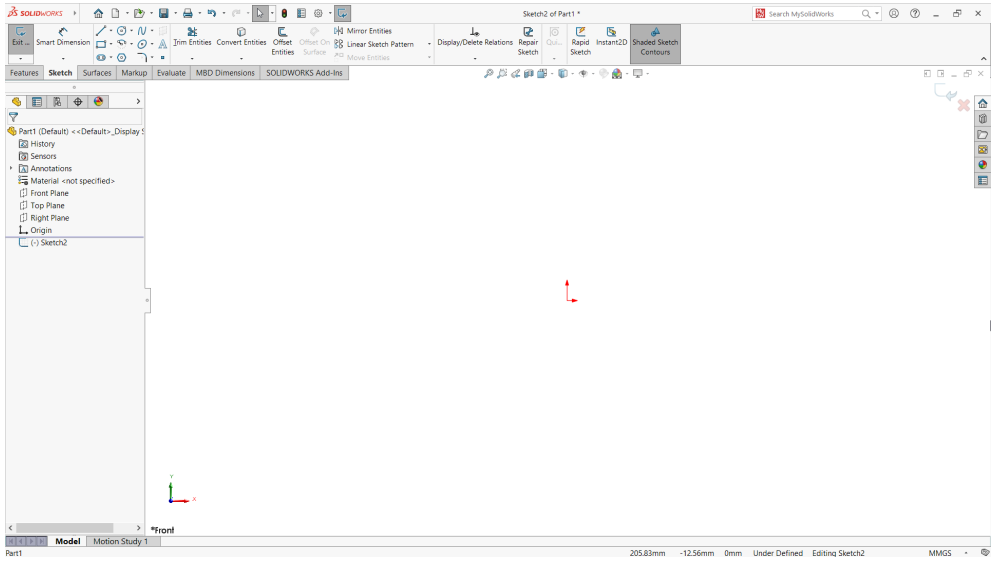

Figure 2-10 *Default screen display of a part document in the sketching environment*

SETTING THE DOCUMENT OPTIONS

When you install SOLIDWORKS on your computer, you will be prompted to specify the dimensioning standards and units for measuring distances. The settings specified at that time will become the default settings and will be applied on any new SOLIDWORKS document opened thereafter. However, if you want to modify these settings for a particular document, you can do so easily by using the **Document Properties** dialog box. To invoke this dialog box, choose the **Options** button from the Menu Bar; the **System Options - General** dialog box will be displayed, as shown in Figure 2-11. Alternatively, choose **Tools > Options** from the SOLIDWORKS menus to invoke the **System Options - General** dialog box. In this dialog box, choose the **Document Properties** tab; the name of this dialog box will change to the **Document Properties - Drafting Standard** dialog box. The procedure to set the options for the current document using this dialog box is discussed next.

Evaluation Copy. Do not reproduce. For information visit www.cadcim.com

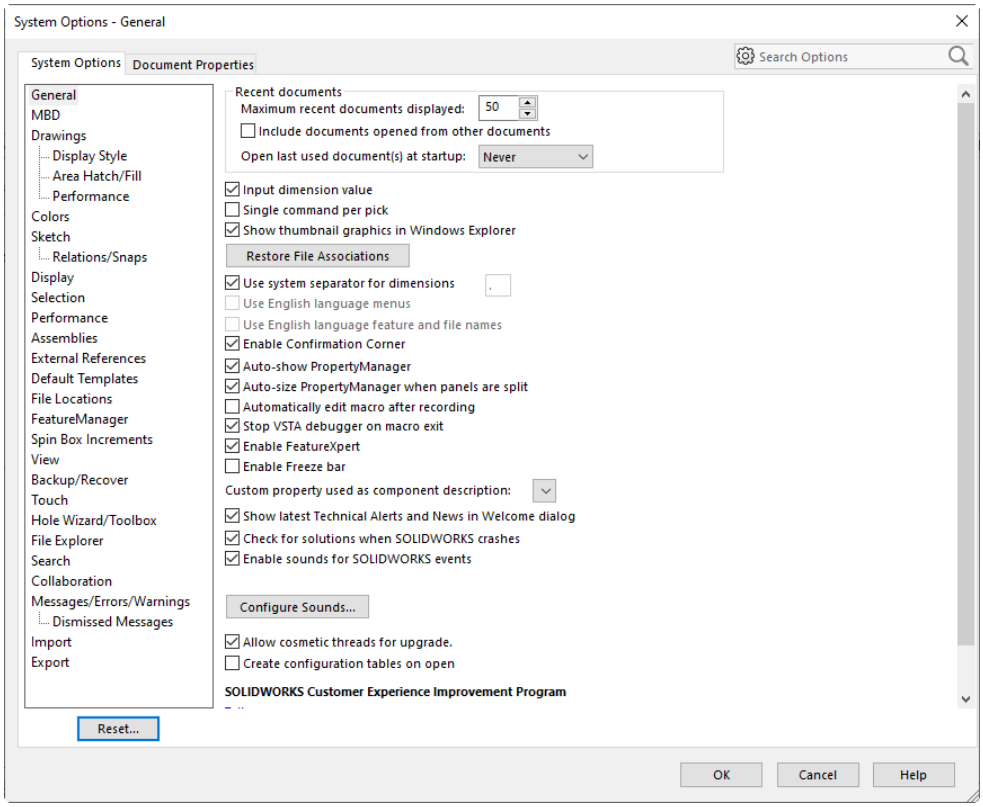

Figure 2-11 *The* ***System Options - General*** *dialog box*

Modifying the Drafting Standards

To modify the **Drafting** standards, invoke the **System Options - General** dialog box and then choose the **Document Properties** tab. You will notice that the **Drafting Standard** option is selected by default in the area available on the left of the dialog box to display the drafting options.

The default drafting standard that was selected while installing SOLIDWORKS will be displayed in the drop-down list in the **Overall drafting standard** area. You can select the required drafting standard from this drop-down list. The standards available in this drop-down list are ANSI, ISO, DIN, JIS, BSI, GOST, and GB. You can select any one of these drafting standards for the current document.

Modifying the Linear and Angular Units

To modify the linear and angular units, invoke the **System Options - General** dialog box and then choose the **Document Properties** tab. In this tab, choose the **Units** option from the area available on the left in the dialog box to display the options related to the linear and angular units, refer to Figure 2-12. The default option that was selected for measuring the linear distances while installing SOLIDWORKS will be available in the **Length** field under the **Unit** column. You can set the units for the current document from the options in the **Unit system** area. To specify the units other than the standard unit system in this area, select the **Custom** radio button; the

Evaluation Copy. Do not reproduce. For information visit www.cadcim.com

options in the tabulation will be enabled. Select the cell corresponding to the **Length** and **Unit** parameter; a drop-down list will be displayed. Set the units from the drop-down list.

The units that can be selected for **Length** are angstroms, nanometers, microns, millimeters, centimeters, meters, microinches, mils, inches, feet, and feet & inches. To change the units for angular dimensions, select the cell corresponding to **Angle** and **Unit**; a drop-down list will be displayed. The angular units that can be selected from this drop-down list are degrees, deg/min, deg/min/sec, and radians. Set the number of decimal places in the corresponding field under the **Decimals** column.

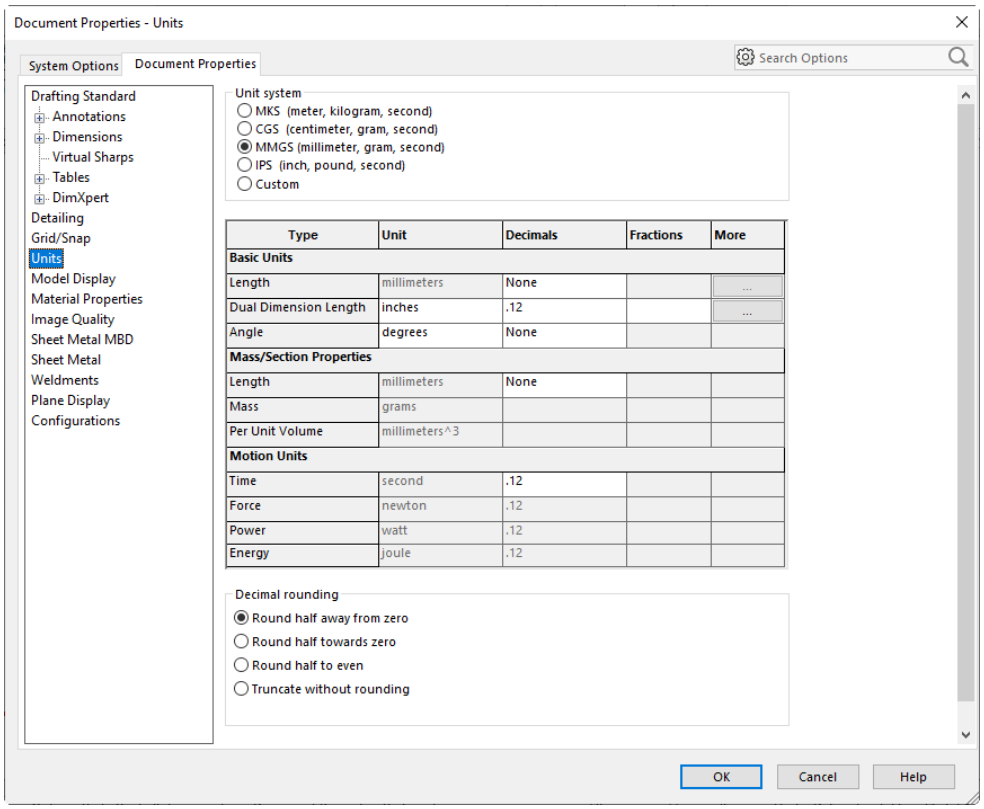

Figure 2-12 *Setting the dimensioning standards*

In SOLIDWORKS, you can also change the unit system for the current document by using the **Unit system** button that is located on the right in the status bar. To change the unit system using this option, click on the **Unit system** button; a flyout will be displayed with a tick mark next to the unit system of the activated document, refer to Figure 2-13. Now, you can select the required unit system for the activated document from this flyout. You can also invoke the **Document Properties - Units** dialog box by choosing the **Edit Document Units** option from this flyout.

Evaluation Copy. Do not reproduce. For information visit www.cadcim.com

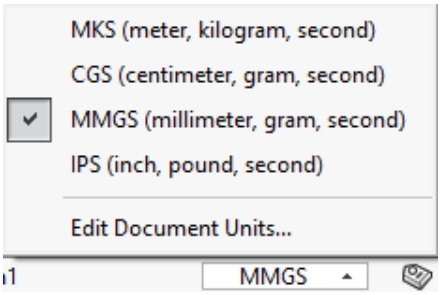

Figure 2-13 *Flyout displayed after choosing the* ***Unit system*** *button*

Modifying the Snap and Grid Settings

In the sketching environment of SOLIDWORKS, you can make the cursor jump through a specified distance while creating the sketch. Therefore, if you draw a sketched entity, its length will change in the specified increment. For example, while drawing a line, if you make the cursor jump through a distance of 10 mm, the length of the line will be incremented by a distance of 10 mm. To modify the snap and grid settings, choose the **Options** button from the Menu Bar to display the **System Options - General** dialog box. To ensure that the cursor jumps through the specified distance, you need to activate the snap option. Select the **Relations/Snaps** sub-option of the **Sketch** option to display the related settings. From the options available on the right, select the **Grid** check box. Next, clear the **Snap only when grid is displayed** check box, if it is selected. If this check box is selected, then the cursor will snap the sketched entities only when the grid is displayed.

Next, choose the **Go To Document Grid Settings** button to invoke the **Document Properties - Grid/Snap** dialog box, refer to Figure 2-14. The distance through which the cursor jumps is dependent on the ratio between the values in the **Major grid spacing** and **Minor-lines per major** spinners available in the **Grid** area. For example, if you want the coordinates to increment by 10 mm, you will have to make the ratio of the major and minor lines to 10. This can be done by setting the value of the **Major grid spacing** spinner to **100** and that of the **Minor-lines per major** spinner to **10**. Similarly, to make the cursor jump through a distance of 5 mm, set the value of the **Major grid spacing** spinner to **50** and that of the **Minor-lines per major** spinner to **10**.



Note

Remember that these grid and snap settings will be applicable for the current documents only. When you open a new document, it will have the default settings that were defined while installing SOLIDWORKS.

Evaluation Copy. Do not reproduce. For information visit www.cadcim.com

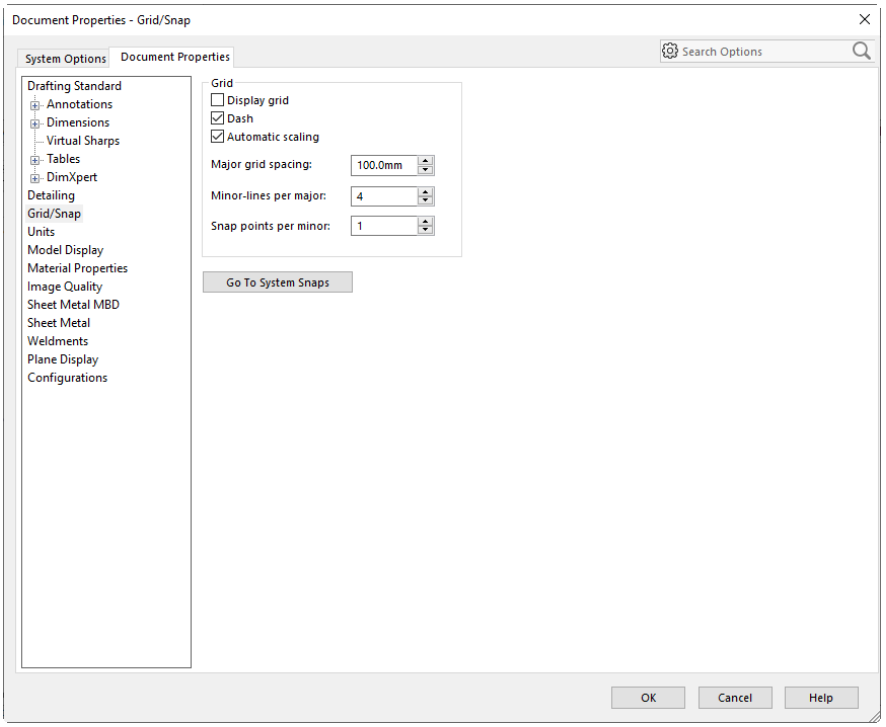

Figure 2-14 *The* ***Document Properties - Grid/Snap*** *dialog box*

Tip

If you want to display the grid in the sketching environment, select the ***Display grid*** *check box from the* ***Grid*** *area of the* ***Document Properties - Grid/Snap*** *dialog box. Alternatively, choose* ***Hide/Show Items > View Grid*** *from the* ***View (Heads-Up)*** *toolbar.*

While drawing a sketched entity by snapping through grips, the grips symbol will be displayed below the cursor on the right.



LEARNING SKETCHER TERMS

Before you learn about various sketching tools, it is important to understand some terms that are used in the sketching environment. These tools and terms are discussed next.

Origin

The origin is represented by a blue colored point displayed at the center of the sketching environment screen. By default, there are two arrows at the origin displaying the horizontal and vertical directions of the current sketching plane. The point of intersection of these two axes is the origin point and the coordinates of this point are 0,0. To display or hide the origin, choose **Hide/Show Items > View Origins** from the **View (Heads-Up)** toolbar.

Evaluation Copy. Do not reproduce. For information visit www.cadcim.com

Inferencing Lines

The inferencing lines are the temporary lines that are used to track a particular point on the screen. These lines are the dashed lines and are automatically displayed when you select a sketching tool in the sketching environment. These lines are created from the endpoints or the midpoint of a sketched entity or from the origin. For example, if you want to draw a line from the point where two imaginary lines intersect, you can use the inferencing lines to locate the point and then draw the line from that point. Figure 2-15 shows the use of inferencing lines to locate the point of intersection of two imaginary lines. Figure 2-16 shows the use of inferencing lines to locate the center of a circle. Notice that the inferencing lines are created from the endpoint of the line and from the origin.

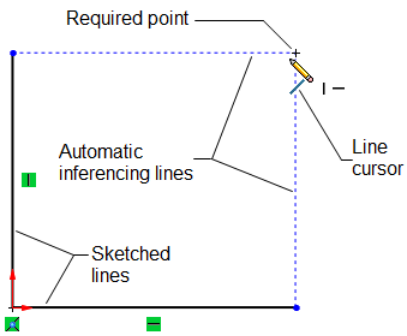

Figure 2-15 *Using inferencing lines to locate a point*

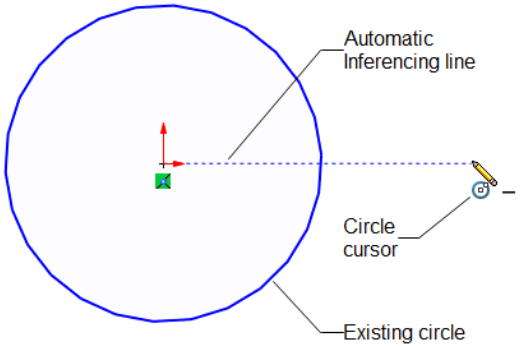

Figure 2-16 *Using inferencing lines to locate the center of a circle*

Note

The inferencing lines that are displayed on the screen will be either blue or yellow. The blue inferencing lines indicate that the relations are not added to the sketched entity and the yellow inferencing lines indicate that the relations are added to the sketched entity. You will learn about various relations in the later chapters.

Inferencing lines will be displayed only when a sketching tool is active.

Tip

You can disable the inferencing line temporarily by pressing and holding the Ctrl key.

Select Tool

SOLIDWORKS menus: Tools > Select

The **Select** tool is used to select a sketched entity or exit any sketching tool that is active. You can select the sketched entities by selecting them one by one using the left mouse button. You can also hold the left mouse button and drag the cursor around the multiple sketched entities to define a box and select the multiple entities. There are two methods of selection, box selection and cross selection. You can also select multiple entities by pressing the Shift and Ctrl keys. These selection methods are discussed next.

Evaluation Copy. Do not reproduce. For information visit www.cadcim.com

Selecting Entities Using the Box Selection

A box is a window that is created by pressing the left mouse button and dragging the cursor from left to right in the drawing area. The selection box will be displayed by continuous lines. When you create a box, the entities that lie completely inside it will be selected. The selected entities will be displayed in light blue and a pop-up toolbar will be displayed near the cursor.

Selecting Entities Using the Cross Selection

When you press the left mouse button and drag the cursor from right to left in the drawing area, a box of dashed lines is drawn. The entities that lie completely or partially inside this box or the entities that touch the dashed lines of the box will be selected. The selected entities will be displayed in light blue and a pop-up toolbar will be displayed near the cursor. This method of selection is known as cross selection.

Selecting Entities Using the Lasso Selection

Lasso selection is a freehand selection. To make a freehand selection, click-drag the mouse pointer; a continuous loop will be displayed. The entities that lie completely inside the loop will be selected and highlighted. Also, a pop-up toolbar will be displayed near the mouse pointer. Note that you need to change the default selection method for using lasso selection. To do so, choose **Tools > Lasso Selection** from the SOLIDWORKS menus.

Selecting Entities Using the Shift and Ctrl Keys

You can also use the Shift and Ctrl keys to manage the selection procedure. To select multiple entities, press and hold the Shift key and select the entities. After selecting some entities, if you need to select more entities using the windows or cross selection, press and hold the Shift key. Now, create a window or a cross selection; all the entities that touch the crossing or are inside the window will be selected.

If you need to remove a particular entity from a group of selected entities, press the Ctrl key and select the entity. You can also invert the current selection using the Ctrl key. To do so, select the entities that you do not want to be included in the selection set. Next, press the Ctrl key and create a window or a cross selection.



Note

*1. When a sketching tool is active, you can invoke the **Select** tool or press the Esc key to exit the sketching tool. You can also right-click and choose the **Select** option from the shortcut menu to exit the tool.*

2. In SOLIDWORKS, when you select an entity, a pop-up toolbar will be displayed with options to edit the sketch. You will learn about these options in the later chapters.

Invert Selection Tool

SOLIDWORKS menus:	Tools > Invert Selection
Toolbar:	Selection Filter > Invert Selection



The **Invert Selection** tool will be active only when an entity is selected and is used to invert the selection set. This tool is used to remove entities from the current selection set and select all other entities that are not in the current selection set. To invert the

Evaluation Copy. Do not reproduce. For information visit www.cadcim.com

selection, select the entities that you do not want to be included in the final selection set and then choose **Tools > Invert Selection** from the SOLIDWORKS menus. You can also invoke the **Invert Selection** tool from the shortcut menu. All entities that were not selected earlier will now be selected and the entities that were in the selection set earlier will now be removed from the selection set.

Now, you are familiar with the important sketching terms. Next, you will learn about the sketching tools available in SOLIDWORKS.

DRAWING LINES

CommandManager:	Sketch > Line flyout > Line
SOLIDWORKS menus:	Tools > Sketch Entities > Line
Toolbar:	Sketch > Line flyout > Line



Lines are one of the basic sketching entities available in SOLIDWORKS. In general terms, a line is defined as the shortest distance between two points. As mentioned earlier, SOLIDWORKS is a parametric solid modeling tool. This property allows you to draw a line of any length and at any angle so that it can be forced to the desired length and angle.

To draw a line in the sketching environment of SOLIDWORKS, invoke the **Line** tool from the **Line** flyout in the **Sketch CommandManager**; the **Insert Line PropertyManager** will be displayed, as shown in Figure 2-17. Alternatively, right-click in the drawing area; a shortcut menu will be displayed with tools and options. Choose the **Line** tool from the shortcut menu to display the **Insert Line PropertyManager**. You will notice that the cursor, which was an arrow, is replaced by the line cursor. You can also invoke the **Line** tool by pressing the L key.

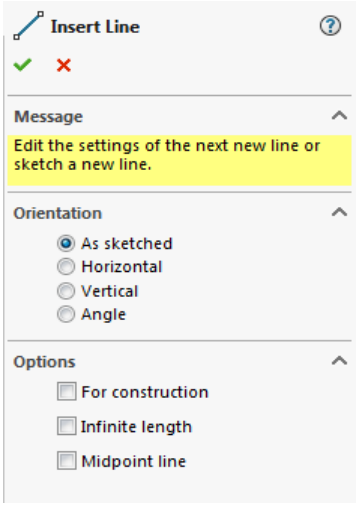

Figure 2-17** Partial view of the **Insert Line PropertyManager

The **Message** rollout of the **Insert Line PropertyManager** informs you to edit the settings of the next line or sketch a new line. The options in this **PropertyManager** can be used to set the orientation and other sketching options to draw a line. All these options are discussed next.

Orientation Rollout

The **Orientation** rollout is used to define the orientation of the line to be drawn. By default, the **As sketched** radio button is selected, so that you can draw the line in any orientation. If you need to draw only horizontal lines, select the **Horizontal** radio button. On selecting this radio button, the **Parameters** rollout will be displayed and you can specify the length of the line in the **Length** spinner provided in this rollout. You will learn more about dimensioning in the later chapters. After specifying the parameters, choose the start point and the endpoint in succession to create the horizontal line.

Similarly, to draw a vertical line, select the **Vertical** radio button, specify the parameters in the **Parameters** rollout, and then choose the start point and the endpoint in succession.

Evaluation Copy. Do not reproduce. For information visit www.cadcim.com



Note

*If the value 0 is set in the **Length** spinner of the **Parameters** rollout, you can draw horizontal/ vertical line of any length.*

The **Angle** radio button is selected to draw lines at a specified angle. When you select this radio button, the **Parameters** rollout will be displayed, where you can set the values of the length of the line and the angle or the orientation of the line.

Options Rollout

Select the **For construction** check box available in this rollout to draw a construction line. You will learn more about construction lines later in this chapter. To draw a line of infinite length, select the **Infinite length** check box. Select the **Midpoint line** check box to draw a line by defining its midpoint and one of its endpoints.

On selecting the **As sketched** radio button in the **Orientation** rollout, you can draw lines by using two methods. The first method is to draw continuous lines and the second method is to draw individual lines. Both these methods are discussed next.

Drawing Continuous Lines

This is the default method of drawing lines. In this method, you have to specify the start point and the endpoint of the line using the left mouse button. As soon as you specify the start point of the line, the **Line Properties PropertyManager** will be displayed. The options in the **Line Properties PropertyManager** will not be activated at this stage.

After specifying the start point, move the cursor away from it and specify the endpoint of the line using the left mouse button. A line will be drawn between the two points. You will also notice that the line has filled squares at the two ends. The line will be displayed in light blue color because it is still selected.

Move the cursor away from the endpoint of the line and you will notice that another line is attached to the cursor. The start point of this line is the endpoint of the last line and the length of this line can be increased or decreased by moving the cursor. This line is called a rubber-band line as this line stretches like a rubber-band when you move the cursor. The point that you specify next on the screen will be taken as the endpoint of the new line and a line will be drawn such that the endpoint of the first line is taken as the start point of the new line and the point you specify is taken as the endpoint of the new line. Now, a new rubber-band line is displayed starting from the endpoint of the last line. This is a continuous process and you can draw a chain of as many continuous lines as needed by specifying the points on the screen using the left mouse button.

You can exit the process of drawing continuous line by pressing the Esc key, by double-clicking on the screen, or by invoking the **Select** tool from the Menu Bar. You can also right-click to display the shortcut menu and choose the **End chain (double-click)** or **Select** option to exit the **Line** tool.

Figure 2-18 shows a sketch drawn using continuous lines. You need to draw this sketch from the lower left corner and in this sketch, the horizontal line has to be drawn first. Draw the other lines and to close the loop, move the cursor attached to the last line close to the start point of

Evaluation Copy. Do not reproduce. For information visit www.cadcim.com

the first line; you will notice that an orange colored circle will be displayed at the start point. If you specify the endpoint of the line at this stage, the loop will be closed and no rubber-band line will be displayed now. This is because the loop is already closed and you may not need another continuous line now. However, the **Line** tool is still active and you can draw other lines.

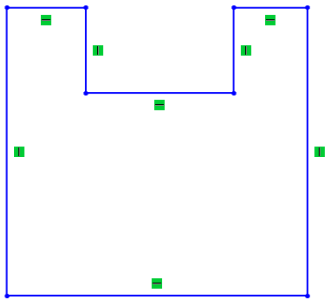

Figure 2-18 *Sketch drawn using continuous lines*



Note

When you terminate the process of drawing a line by double-clicking on the screen or by choosing ***End chain (double-click)*** *from the shortcut menu, the current chain ends but the* ***Line*** *tool still remains active. As a result, you can draw other lines. However, to exit the* ***Line*** *tool, you can choose the* ***Select*** *option from the shortcut menu or press the Esc key.*

Drawing Individual Lines

This is the second method of drawing lines. This method is used to draw individual lines in which the start point of the new line will not necessarily be the endpoint of the previous line. To draw individual lines, you need to press and hold the left mouse button to specify the start point, and then drag the cursor without releasing the mouse button. Once you have dragged the cursor to the endpoint, release the left mouse button; a line will be drawn between the two points.

To make the sketching process easy in SOLIDWORKS, you are provided with the **PropertyManager**. The **PropertyManager** is a table that will be displayed on the left of the screen as soon as you select a sketched entity. The **PropertyManager** has all parameters related to the sketched entity such as the start point, endpoint, angle, length, and so on. You will notice that as you start dragging the mouse, the **Line Properties PropertyManager** is displayed on the left of the drawing area. All options in the **Line Properties PropertyManager** will be available when you release the left mouse button. Figure 2-19 shows partial view of the **Line Properties PropertyManager**.



Note

The ***Line Properties PropertyManager*** *also displays additional options about relations. You will learn more about relations in the later chapters.*

Evaluation Copy. Do not reproduce. For information visit www.cadcim.com

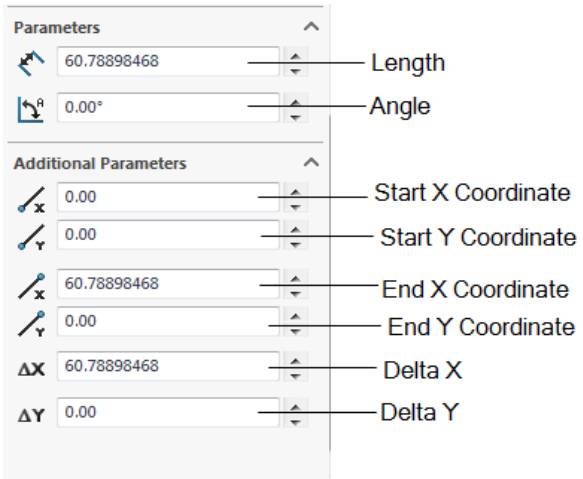

Figure 2-19 *Partial view of the* ***Line Properties PropertyManager***

After you have drawn the line, modify the parameters in the **Line Properties PropertyManager** to create the line to the desired length and angle. You can also modify the line dynamically by selecting its endpoints and then dragging them.

Line Cursor Parameters

When you draw lines in the sketching environment of SOLIDWORKS, you will notice that a numeric value is displayed above the line cursor, refer to Figure 2-20. This numeric value indicates the length of the line you draw. This value is the same as the one displayed in the **Length** spinner of the **Line Properties PropertyManager**. The only difference is that in the **Line Properties PropertyManager**, the value will be displayed with more precision.

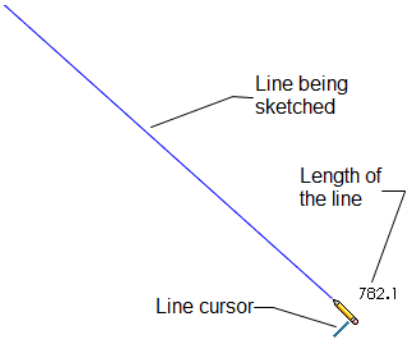

Figure 2-20 *The length of the line displayed on the screen while drawing it*

The other thing that you will notice while drawing horizontal or vertical line is that two symbols are displayed below the line cursor. These are the symbols of the **Vertical** and **Horizontal** relations. SOLIDWORKS applies these relations automatically to lines. These relations ensure that the lines you draw are vertical or horizontal. Figure 2-21 shows the symbol of the **Vertical** relation on a line and Figure 2-22 shows the symbol of the **Horizontal** relation on a line.



Note

In addition to the ***Horizontal*** *and* ***Vertical*** *relations, you can apply a number of other relations such as* ***Tangent***, ***Concentric***, ***Perpendicular***, ***Parallel***, *and so on. You will learn about all these relations and other options in the* ***Line Properties PropertyManager*** *in the later chapters.*

Evaluation Copy. Do not reproduce. For information visit www.cadcim.com

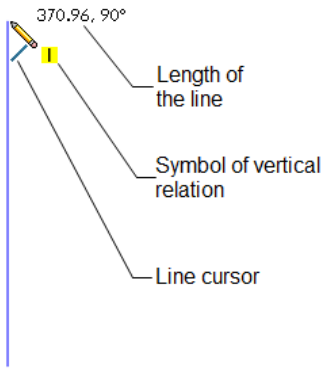

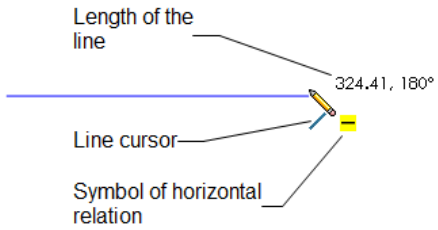

Figure 2-21 *Symbol of the* ***Vertical*** *relation* ***Figure 2-22*** *Symbol of the* ***Horizontal*** *relation*

Drawing Tangent or Normal Arcs Using the Line Tool

SOLIDWORKS allows you to draw tangent or normal arcs originating from the endpoint of the line while drawing continuous lines. Note that these arcs can be drawn only if you have drawn at least one line, arc, or spline. To draw such arcs, draw a line by specifying the start point and the endpoint. Move the cursor away from the endpoint of the last line to display the rubber-band line. Now, when you move the cursor back to the endpoint of the last line, the arc mode will be invoked. The angle and the radius of the arc will be displayed above the arc cursor. You can also invoke the arc mode by right-clicking and choosing the **Switch to arc (A)** option from the shortcut menu or pressing the A key on the keyboard.

To draw a tangent arc, invoke the arc mode by moving the cursor back to the endpoint of the last line. Now, move the cursor through a small distance along the tangent direction of the line; a dotted line will be drawn. Next, move the cursor in the direction in which the arc should be drawn. You will notice that a tangent arc is drawn. Specify the endpoint of the tangent arc using the left mouse button. Figure 2-23 shows an arc tangent to an existing line.

To draw a normal arc, invoke the arc mode. Next, move the cursor through a small distance in the direction normal to the line and then move it in the direction of the endpoint of the arc; the normal arc will be drawn, as shown in Figure 2-24.

As soon as the endpoint of the tangent or the normal arc is defined, the line mode will be invoked again. You can continue drawing lines using the line mode or move the cursor back to the endpoint of the arc to invoke the arc mode.



Note

If the arc mode is invoked by mistake while drawing lines, you can cancel the arc mode and invoke the line mode again by pressing the A key. Alternatively, you can right-click and choose ***Switch to Line (A)*** *from the shortcut menu or move the cursor back to the endpoint and press the left mouse button to invoke the line mode.*

Evaluation Copy. Do not reproduce. For information visit www.cadcim.com

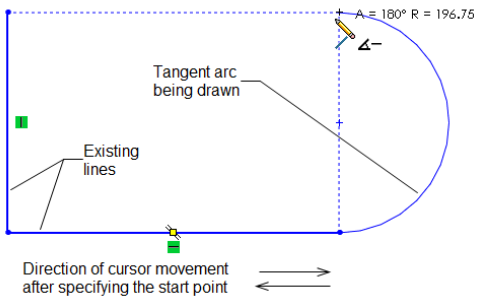

Figure 2-23 *Drawing a tangent arc using the* ***Line*** *tool*

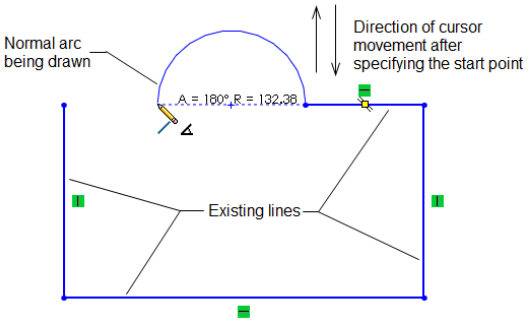

Figure 2-24 *Drawing a normal arc using the* ***Line*** *tool*

Tip

You can flip the tangency of a tangent arc by right-clicking on the arc drawn and then selecting the ***Reverse Endpoint Tangent*** *option from the short-cut menu displayed.*

Drawing Construction Lines or Centerlines

CommandManager:	Sketch > Line flyout > Centerline
SOLIDWORKS menus:	Tools > Sketch Entities > Centerline
Toolbar:	Sketch > Line flyout > Centerline

The construction lines or the centerlines are the ones that are drawn only for the aid of sketching. These lines are not considered while converting the sketches into features. You can draw a construction line similar to the sketched line by using the **Centerline** tool. You will notice that when you draw a construction line, the **For construction** check box in the **Options** rollout of the **Line Properties PropertyManager** is selected. You can also draw a construction line using the **Line** tool. To do so, invoke the **Insert Line PropertyManager** by choosing the **Line** tool, select the **For construction** check box in the **Options** rollout, and draw the line.

Drawing Midpoint Line

CommandManager:	Sketch > Line flyout > Midpoint Line
SOLIDWORKS menus:	Tools > Sketch Entities > Midpoint Line
Toolbar:	Sketch > Line flyout > Midpoint Line

The **Midpoint Line** tool is used to draw a line by specifying its midpoint and end point. To invoke this tool, choose the **Midpoint Line** tool from the **Line** flyout of the **Sketch** toolbar.

Evaluation Copy. Do not reproduce. For information visit www.cadcim.com

Drawing the Lines of Infinite Length

SOLIDWORKS allows you to draw lines of infinite length. Note that these lines can be drawn only if the **Line** or **Centerline** tool is invoked. To draw lines of infinite length, invoke the **Insert Line PropertyManager** and then select the **Infinite length** check box available in the **Options** rollout of this PropertyManager. Next, specify two points in the drawing area; a line of infinite length will be drawn.

To convert a solid infinite length line to a construction infinite length line, you need to select the **For construction** check box in the **Options** rollout of the **Line Properties PropertyManager**. You can also set the angle value for infinite length lines in the **Angle** spinner available in the **Parameters** rollout of this PropertyManager.



Tip

*When you select a line, a pop-up toolbar will be displayed. Choose the **Construction Geometry** button from this toolbar to convert the line into a construction line.*

DRAWING CIRCLES

In SOLIDWORKS, there are two methods to draw circles. In the first method, you can specify the center point of a circle and then defining its radius. In the second method, you can draw a circle by defining three points that lie on its periphery. The tools for drawing a circle are grouped together in the **Circle** flyout in the **Sketch CommandManager**. To draw a circle, select the down arrow on the **Circle** tool; a flyout with both the tools will be displayed. Invoke a tool from this flyout; the **Circle PropertyManager** will be displayed, as shown in Figure 2-25. Alternatively, right-click and then choose the **Circle** option from the shortcut menu to display the **Circle PropertyManager**. You can also invoke the **Circle** tool by using the Mouse Gesture. After invoking the **Circle PropertyManager**, select the appropriate method from the **Circle Type** rollout to draw the circle. Both methods to draw the circles are discussed next.

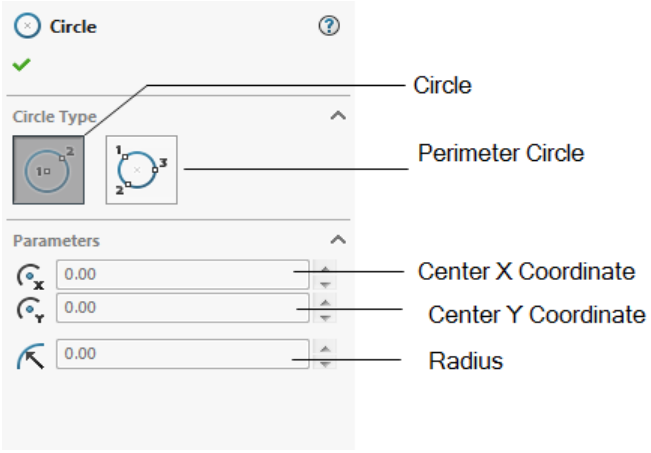

Figure 2-25 *Partial view of the **Circle PropertyManager***

Evaluation Copy. Do not reproduce. For information visit www.cadcim.com

Drawing Circles by Defining Their Center Points

CommandManager:	Sketch > Circle flyout > Circle
SOLIDWORKS menus:	Tools > Sketch Entities > Circle
Toolbar:	Sketch > Circle flyout > Circle



When you invoke the **Circle PropertyManager**, the **Circle** button is chosen by default in the **Circle Type** rollout. Also, the arrow cursor is replaced by the circle cursor. Specify the center point of the circle and then move the cursor away from the point to define its radius. The current radius of the circle will be displayed above the circle cursor. This radius will change as you move the cursor. Click on the drawing area away from the center point to define the radius. This radius can be modified by using the **Circle PropertyManager**. Also, the coordinates of the center point of the circle can be modified by using the **Circle PropertyManager**. Figure 2-26 shows a circle being drawn using the **Circle** tool by specifying the center point and dragging the cursor.

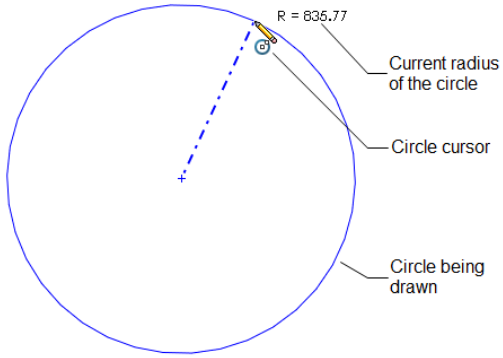

Figure 2-26 *Drawing a circle by specifying the center point*

Drawing Circles by Defining Three Points

CommandManager:	Sketch > Circle flyout > Perimeter Circle
SOLIDWORKS menus:	Tools > Sketch Entities > Perimeter Circle
Toolbar:	Sketch > Circle flyout > Perimeter Circle



The **Perimeter Circle** tool is used to draw a circle by defining three points that lie on the periphery of a circle. To draw a circle using this method, choose the **Perimeter Circle** tool from the **Circle** flyout. Alternatively, invoke the **Circle PropertyManager** and choose the **Perimeter Circle** button from the **Circle Type** rollout; the select cursor will be replaced by a three-point circle cursor. Specify the first point of the circle in the drawing area. Next, specify the other two points of the circle. The resulting circle will be highlighted in light blue and you can modify the circle by setting its parameters in the **Circle PropertyManager**. Figure 2-27 shows a circle being drawn by specifying three points.

Evaluation Copy. Do not reproduce. For information visit www.cadcim.com

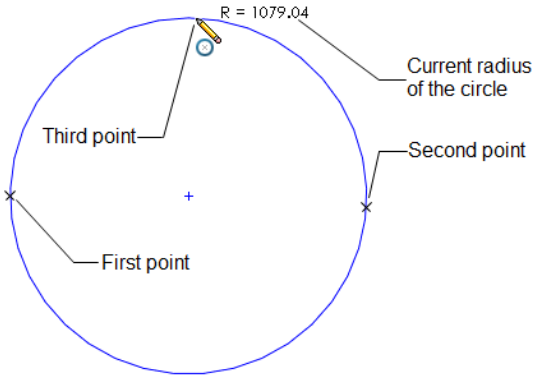

Figure 2-27 *Drawing a circle by specifying three points*

Drawing Construction Circles

If you want to sketch a construction circle, draw a circle using the **Circle** tool and then select the **For construction** check box in the **Options** rollout of the **Circle PropertyManager**.



Tip

To convert a construction entity back to a sketched entity, invoke the ***Select*** *tool and then select the construction entity; a popup toolbar will be displayed. Deactivate the* ***Construction Geometry*** *button in this toolbar.*

DRAWING ARCS

In SOLIDWORKS, you can draw arcs by using three tools: **Centerpoint Arc**, **Tangent Arc**, and **3 Point Arc**. All these tools are grouped together in the **Arc** flyout in the **Sketch CommandManager**. You can invoke these tools from the flyout displayed on choosing the down arrow on the right of the **Centerpoint Arc** tool. The methods used to create arcs using these tools are discussed next.

Drawing Tangent/Normal Arcs

CommandManager:	Sketch > Arc flyout > Tangent Arc
SOLIDWORKS menus:	Tools > Sketch Entities > Tangent Arc
Toolbar:	Sketch > Arc flyout > Tangent Arc



The tangent arcs are the ones that are drawn tangent to an existing sketched entity. The existing sketched entities include the sketched and construction lines, arcs, and splines. The normal arcs are the ones that are drawn normal to an existing entity. You can draw tangent and normal arcs using the **Tangent Arc** tool.

To draw a tangent arc, invoke the **Tangent Arc** tool; the arrow cursor will be replaced by the tangent arc cursor. Move the arc cursor close to the endpoint of the entity that you want to select as the tangent entity. You will notice that an orange colored dot is displayed at the endpoint. Also, a yellow symbol is displayed with two concentric circles. Now, press the left mouse button once and move the cursor along the tangent direction through a small distance and then move

Evaluation Copy. Do not reproduce. For information visit www.cadcim.com

the cursor to size the arc. The arc will start from the endpoint of the tangent entity and its size will change as you move the cursor. Note that the angle and radius of the tangent arc are displayed above the cursor, as shown in Figure 2-28. Click when the radius and angle values are closer to the desired values.

To draw a normal arc, invoke the **Tangent Arc** tool. Move the cursor close to the endpoint of the entity that you want to select as the normal entity; an orange colored dot will be displayed at the endpoint. Also, a yellow symbol is displayed with two concentric circles. Now, press the left mouse button once and move the cursor along the normal direction through a small distance and then move the cursor to size the arc, refer to Figure 2-29. Click when the radius and angle values are closer to the desired values.

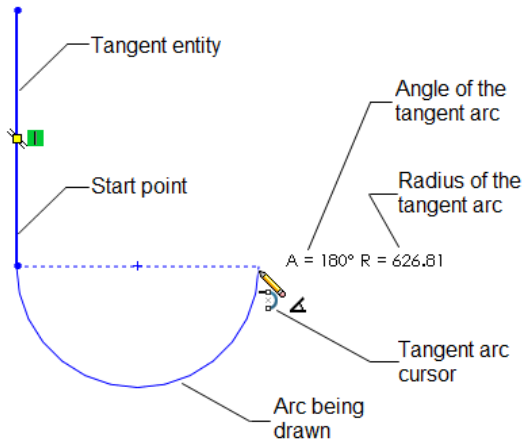

Figure 2-28 *Drawing a tangent arc*

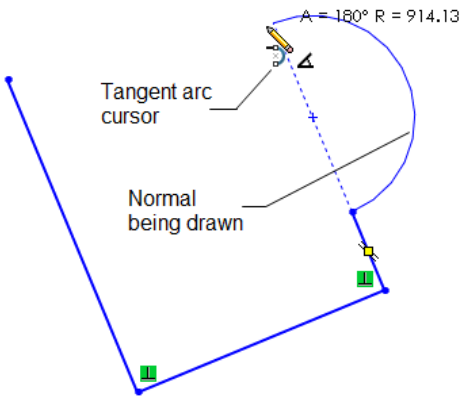

Figure 2-29 *Drawing a normal arc*

On invoking the **Tangent Arc** tool, the **Arc PropertyManager** will be displayed. However, the options in the **Arc PropertyManager** will not be enabled at this stage. These options will be enabled on selecting the completed tangent or normal arc.

You can draw an arbitrary arc and then modify its value using the **Arc PropertyManager**. Figure 2-30 shows partial view of the **Arc PropertyManager**.



Note

When you select a tangent entity to draw a tangent arc, the ***Tangent*** *relation is applied between the start point of the arc and the tangent entity. Therefore, if you change the coordinates of the start point of the arc, the tangent entity will also be modified accordingly.*

Evaluation Copy. Do not reproduce. For information visit www.cadcim.com

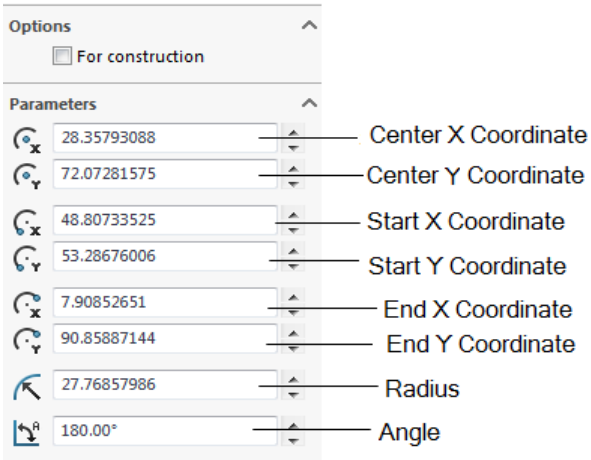

Figure 2-30 *Partial view of the* ***Arc PropertyManager***

Drawing Centerpoint Arcs

CommandManager:	Sketch > Arc flyout > Centerpoint Arc
SOLIDWORKS menus:	Tools > Sketch Entity > Centerpoint Arc
Toolbar:	Sketch > Arc flyout > Centerpoint Arc



The center point arcs are the ones that are drawn by defining the centerpoint, start point, and endpoint of the arc. When you invoke this tool, the arrow cursor is replaced by the arc cursor.

To draw a center point arc, invoke the **Centerpoint Arc** tool and then move the arc cursor to the point that you want to specify as the center point of the arc. Press the left mouse button once at the location of the center point and then move the cursor to the point from where you want to start the arc. You will notice that a dotted circle is displayed on the screen. The size of this circle will modify as you move the mouse. This circle is drawn for your reference and the center point of this circle lies at the point that you specified as the center of the arc. Press the left mouse button once at the point that you want to select as the start point of the arc. Next, move the cursor to specify the endpoint of the arc. You will notice that the reference circle is no longer displayed and an arc is being drawn with the start point as the point that you specified after specifying the center point. Also, the **Arc PropertyManager**, similar to the one that is shown in the tangent arc, is displayed on the left of the drawing area. Note that the options in the **Arc PropertyManager** will not be available at this stage.

If you move the cursor in the clockwise direction, the resulting arc will be drawn in the clockwise direction. However, if you move the cursor in the counterclockwise direction, the resulting arc will be drawn in the counterclockwise direction. Specify the endpoint of the arc using the left mouse button. Figure 2-31 shows the reference circle displayed when you move the mouse button after specifying the center point of the arc and Figure 2-32 shows the resulting center point arc.

Evaluation Copy. Do not reproduce. For information visit www.cadcim.com

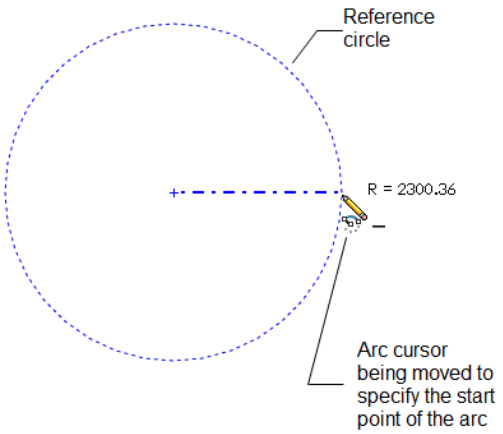

Figure 2-31 *Reference circle displayed after specifying the center point of the arc*

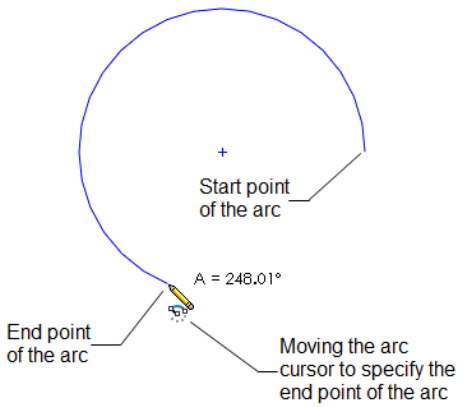

Figure 2-32 *The resulting center point arc*

Drawing 3 Point Arcs

CommandManager:	Sketch > Arc flyout > 3 Point Arc
SOLIDWORKS menus:	Tools > Sketch Entities > 3 Point Arc
Toolbar:	Sketch > Arc flyout > 3 Point Arc



The three point arcs are the ones that are drawn by defining the start point and the endpoint of the arc, and a point on the circumference or the periphery of the arc. On invoking this tool, the arrow cursor is replaced by the three-point arc cursor.

To draw a 3 point arc, invoke the **3 Point Arc** tool and then move the three-point arc cursor to the point that you want to specify as the start point of the arc. Press the left mouse button once at the location of the start point and then move the cursor to the point that you want to specify as the endpoint of the arc. As soon as you invoke the **3 Point Arc** tool, the **Arc PropertyManager** will be displayed. Note that when you start moving the cursor after specifying the start point, a reference arc will be displayed. However, the options in the **Arc PropertyManager** will not be activated at this stage.

Specify the endpoint of the arc using the left mouse button. You will notice that the reference arc is no longer displayed. Instead, a solid arc is displayed and the cursor is attached to it. As you move the cursor, the arc will also be modified dynamically. Using the left mouse button, specify a point on the screen to create the arc. The last point that you specify will determine the direction and radius of the arc. The options in the **Arc PropertyManager** will be displayed once you draw the arc. You can modify the properties of the arc using the **Arc PropertyManager**. Figure 2-33 shows the reference arc drawn by specifying the start point and endpoint of the arc and Figure 2-34 shows the third point being specified for drawing the arc.

Evaluation Copy. Do not reproduce. For information visit www.cadcim.com

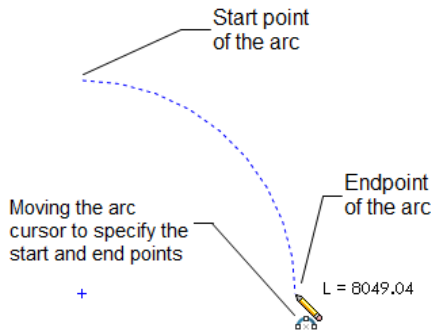

Figure 2-33 Specifying the start point and endpoint of the arc

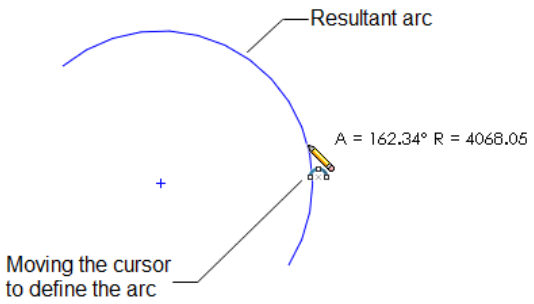

Figure 2-34 Specifying the third point for drawing the arc

DRAWING RECTANGLES

In SOLIDWORKS, the tools that are used to draw rectangles are grouped together in the **Rectangle** flyout. On invoking a tool from this flyout, the **Rectangle PropertyManager** will be displayed. Select an appropriate method to draw a rectangle from the **Rectangle Type** rollout. Alternatively, right-click and then choose the **Corner Rectangle** option from the shortcut menu to display the **Rectangle PropertyManager**. You can also invoke this PropertyManager by using the Mouse Gesture. Various methods to create a rectangle are discussed next.

Drawing Rectangles by Specifying Their Corners

CommandManager:	Sketch > Rectangle flyout > Corner Rectangle
SOLIDWORKS menus:	Tools > Sketch Entities > Corner Rectangle
Toolbar:	Sketch > Rectangle flyout > Corner Rectangle



To draw a rectangle by specifying the two diagonally opposite corners, choose the **Corner Rectangle** button from the **Rectangle Type** rollout in the **Rectangle PropertyManager**, if it is not chosen by default. Next, move the cursor to the point that you want to specify as the first corner of the rectangle and then click the left mouse button once to specify the first corner. Now, move the cursor diagonally away from it. You will notice that the length and width of the rectangle are displayed above the rectangle cursor. The length is measured along the X-axis and the width is measured along the Y-axis. Next, specify the other corner of the rectangle using the left mouse button. Figure 2-35 shows a rectangle being drawn by specifying two diagonally opposite corners.

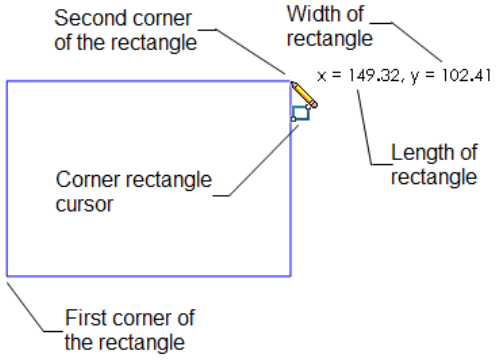

Figure 2-35 Drawing a rectangle by specifying two diagonally opposite corners

Evaluation Copy. Do not reproduce. For information visit www.cadcim.com

Drawing Rectangles by Specifying the Center and a Corner

CommandManager:	Sketch > Rectangle flyout > Center Rectangle
SOLIDWORKS menus:	Tools > Sketch Entities > Center Rectangle
Toolbar:	Sketch > Rectangle flyout > Center Rectangle



To draw a rectangle by specifying the center and one of the corners, choose the **Center Rectangle** button from the **Rectangle Type** rollout in the **Rectangle PropertyManager**. Next, move the cursor to the point that you want to specify as the center of the rectangle and click the left mouse button. Then, move the cursor and specify one of the corners of the rectangle using the left mouse button. You will notice that the length and width of the rectangle are displayed above the rectangle cursor. The length is measured along the X-axis and the width is measured along the Y-axis. Figure 2-36 shows a rectangle being drawn by specifying its center and one of the corners.

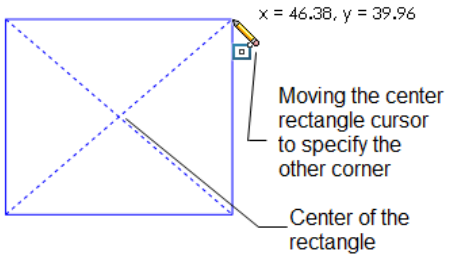

Figure 2-36 *Drawing a rectangle by specifying its center and one of the corners*

Drawing Rectangles at an Angle

CommandManager:	Sketch > Rectangle flyout > 3 Point Corner Rectangle
SOLIDWORKS menus:	Tools > Sketch Entities > 3 Point Corner Rectangle
Toolbar:	Sketch > Rectangle flyout > 3 Point Corner Rectangle



To draw a rectangle at an angle, choose the **3 Point Corner Rectangle** button from the **Rectangle Type** rollout in the **Rectangle PropertyManager**. Move the cursor to the point that you want to specify as the start point of one of the edges of the rectangle. Click the left mouse button at this point and move the cursor to size the edge. You will notice that a reference line is being drawn. Depending on the current position of the cursor, the reference line will be horizontal, vertical, or inclined. The current length of the edge and its angle will be displayed above the rectangle cursor. Specify the second point as the endpoint of the edge such that the reference line is at an angle.

Next, move the cursor to specify the width of the rectangle. You will notice that a reference rectangle is drawn at an angle. Also, irrespective of the current position of the cursor, the width will be specified normal to the first edge, either above or below it. Specify the third point using the left mouse button to define the width of the rectangle, as shown in Figure 2-37; the reference rectangle will be converted into a sketched rectangle.

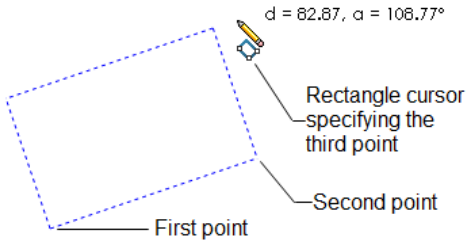

Figure 2-37 *Drawing a rectangle at an angle*

Evaluation Copy. Do not reproduce. For information visit www.cadcim.com

Drawing Centerpoint Rectangles at an Angle

CommandManager:	Sketch > Rectangle flyout > 3 Point Center Rectangle
SOLIDWORKS menus:	Tools > Sketch Entities > 3 Point Center Rectangle
Toolbar:	Sketch > Rectangle flyout > 3 Point Center Rectangle



To draw a centerpoint rectangle at an angle, choose the **3 Point Center Rectangle** button from the **Rectangle Type** rollout in the **Rectangle PropertyManager**. Next, move the cursor to the point that you want to specify as the center point of the rectangle. Click the left mouse button once at this point and move the cursor to a distance that is equal to half the length of the rectangle to be drawn. You will notice that a reference line is being drawn. Depending on the current position of the cursor, the reference line can be horizontal, vertical, or inclined. The current length of the edge and its angle will be displayed above the rectangle cursor. Specify the second point using the left mouse button. Next, specify the third point to define the width of the rectangle.

You can select the **From Corners** or **From Midpoints** radio button from the **Rectangle Type** rollout to add construction lines from corner to corner or from midpoint of the sides of the rectangle respectively, as shown in Figures 2-38 and 2-39.

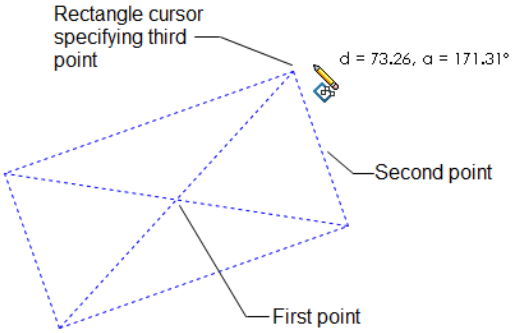

Figure 2-38 *Specifying the third point when the* ***From Corners*** *radio button is selected*

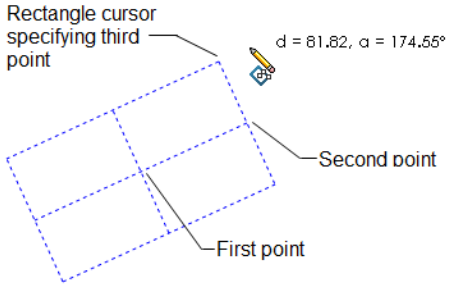

Figure 2-39 *Specifying the third point when the* ***From Midpoints*** *radio button is selected*

Drawing Parallelograms

CommandManager:	Sketch > Rectangle flyout > Parallelogram
SOLIDWORKS menus:	Tools > Sketch Entities > Parallelogram
Toolbar:	Sketch > Rectangle flyout > Parallelogram



To draw a parallelogram, choose the **Parallelogram** button from the **Rectangle Type** rollout of the **Rectangle PropertyManager**. Specify two points on the screen to define one edge in the parallelogram. Next, move the mouse to define the width of the parallelogram. As you move the mouse, a reference parallelogram will be drawn. The size and shape of the reference parallelogram will depend on the current location of the cursor.

Specify a point on the screen to define the parallelogram. Figure 2-40 shows the parallelogram cursor specifying the third point to draw a parallelogram.

Evaluation Copy. Do not reproduce. For information visit www.cadcim.com

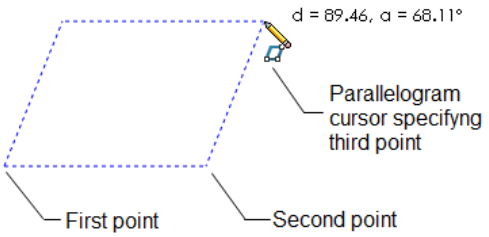

Figure 2-40 *Drawing a parallelogram*



Note

In SOLIDWORKS, a rectangle is considered as a combination of four individual lines. Therefore, after drawing the rectangle by using the ***Rectangle PropertyManager****. If you select one of the lines of the rectangle, the* ***Line Properties PropertyManager*** *will be displayed instead of the* ***Rectangle PropertyManager****. You can modify the parameters of the selected line using the* ***Line Properties PropertyManager****.*

Remember that because the relations are applied to all four corners of the rectangle, on modifying the parameters of one of the lines using the ***Line Properties PropertyManager****, the other three lines will also be modified accordingly.*

You can convert a rectangle into a construction rectangle by selecting all lines together using a window and then selecting the ***For construction*** *check box from the PropertyManager.*

DRAWING POLYGONS

CommandManager:	Sketch > Polygon
SOLIDWORKS menus:	Tools > Sketch Entities > Polygon
Toolbar:	Sketch > Polygon



A polygon is defined as a multisided geometric figure in which length of all the sides and angle between them are same. In SOLIDWORKS, you can draw a polygon with the number of sides ranging from 3 to 40. The dimensions of a polygon are controlled by using the diameter of a construction circle that is inscribed inside the polygon or circumscribed outside the polygon. If the construction circle is inscribed inside the polygon, the diameter of the construction circle will be taken perpendicularly from the edges of the polygon. If the construction circle is circumscribed about the polygon, the diameter of the construction circle will be taken from the vertices of the polygon.

To draw a polygon, invoke the **Polygon** tool; the **Polygon PropertyManager** will be displayed, as shown in Figure 2-41.

Evaluation Copy. Do not reproduce. For information visit www.cadcim.com

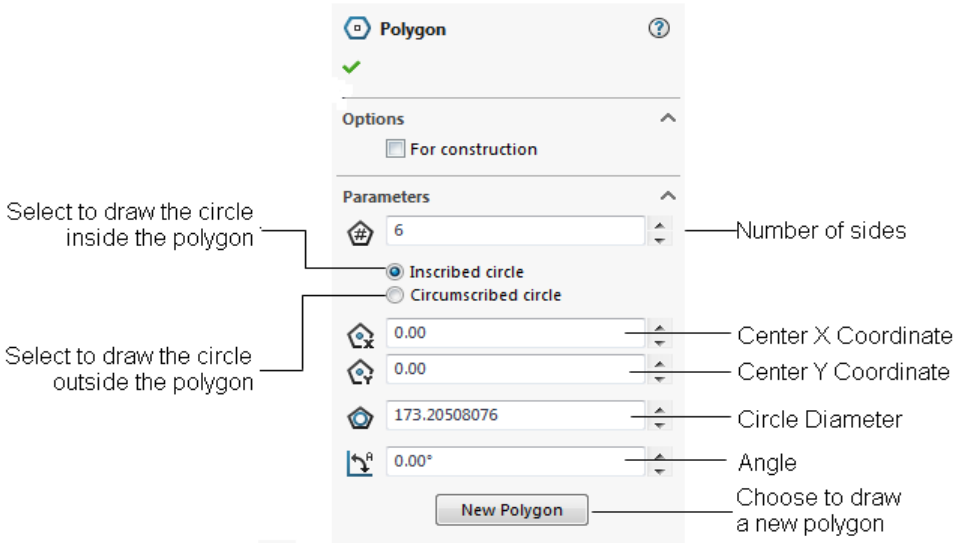

Figure 2-41** The **Polygon PropertyManager

Set the parameters such as the number of sides, inscribed or circumscribed circle, and so on in the **Polygon PropertyManager**. You can also modify these parameters after drawing the polygon. When you invoke this tool, the arrow cursor will be replaced by the polygon cursor. Click the left mouse button at the point that you want to specify as the center point of the polygon and then move the cursor to size the polygon. The length of each side and the rotation angle of the polygon will be displayed above the polygon cursor as you drag it. Using the left mouse button, specify a point on the screen after you get the desired length and rotation angle of the polygon. You will notice that based on whether you selected the **Inscribed circle** or the **Circumscribed circle** radio button in the **Polygon PropertyManager**, a construction circle will be drawn inside or outside the polygon. After you have drawn the polygon, you can modify the parameters such as the center point of the polygon, the diameter of the construction circle, the angle of rotation, and so on using the **Polygon PropertyManager**. If you want to draw another polygon, choose the **New Polygon** button provided below the **Angle** spinner in the **Polygon PropertyManager**.

Figure 2-42 shows a six-sided polygon with the construction circle inscribed inside the polygon and Figure 2-43 shows a six-sided polygon with the construction circle circumscribed about the polygon. Note that the reference circle is retained with the polygon. Remember that this circle will not be considered while converting the polygon into a feature.

Evaluation Copy. Do not reproduce. For information visit www.cadcim.com

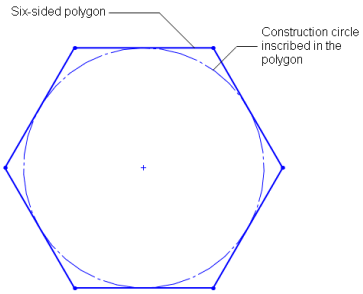

Figure 2-42 *Six-sided polygon with the construction circle inscribed inside it*

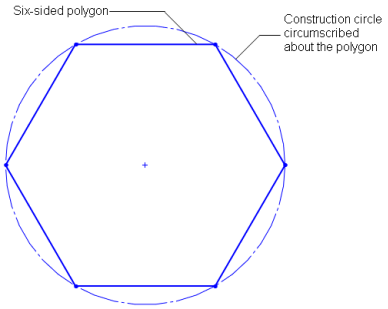

Figure 2-43 *Six-sided polygon with the construction circle circumscribed about it*

Tip

You can invoke the list of recently used tools by using the shortcut menu. To do so, right-click in the drawing area and choose the ***Recent Commands*** *option from the shortcut menu; a cascading menu will be displayed with the most recently used tools.*

DRAWING SPLINES

CommandManager:	Sketch > Spline flyout > Spline
SOLIDWORKS menus:	Tools > Sketch Entities > Spline
Toolbar:	Sketch > Spline flyout > Spline

To draw a spline, choose the **Spline** tool from the **Sketch CommandManager**. Then, using the left mouse button continuously, specify the points through which the spline will pass. This method of drawing splines is similar to that of drawing continuous lines. After specifying all points of the spline, right-click to invoke the shortcut menu. Now, you can draw a new spline. If you need to exit the **Spline** tool, choose the **Select** option. Figure 2-44 shows a spline drawn with its start point at the origin.

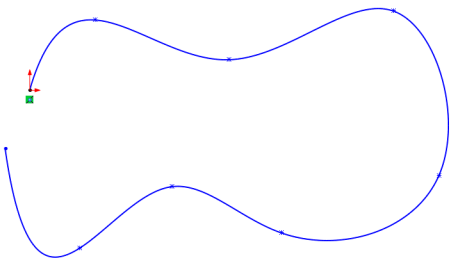

Figure 2-44 *Spline with its start point at the origin*

Note

When you select a spline using the ***Select*** *tool, handles are displayed on the points. These handles are used to edit a spline. You will learn more about these handles in the later chapters while editing splines. Similar to individual line, you can also create individual spline segments by specifying the start point and then dragging the mouse to specify the endpoint.*

Evaluation Copy. Do not reproduce. For information visit www.cadcim.com



Tip

After creating a spline, if you select it by using the ***Select*** *tool, the* ***Spline PropertyManager*** *will be displayed. Also, the control points will be displayed with a blue filled square. The number of the current control point and its X and Y coordinates will be displayed in the* ***Parameters*** *rollout of the* ***Spline PropertyManager****. You can modify these coordinates to modify the position of the selected control point. A double-sided arrow along with the handle will also be displayed. You will learn more about the handle in later chapters.*

DRAWING SLOTS

In SOLIDWORKS, the tools used to draw slot profile are grouped together in the **Slot** flyout. To draw a slot profile, invoke the **Slot PropertyManager** by choosing the **Slot** button from the **Slot** flyout and select an appropriate method to draw a slot profile from the **Slot Type** rollout. Alternatively, right-click and then choose an option from the shortcut menu to draw a slot profile. Various methods to create a slot profile are discussed next.

Creating a Straight Slot

CommandManager:	Sketch > Slot flyout > Straight Slot
SOLIDWORKS menus:	Tools > Sketch Entities > Straight Slot
Toolbar:	Sketch > Slot flyout > Straight Slot



To create a straight slot, choose the **Straight Slot** button from the **Sketch CommandManager**; the **Slot PropertyManager** will be displayed. Next, move the cursor where you want to specify the first endpoint of the straight slot. Press the left mouse button once at the first endpoint, and then move the cursor and specify the second endpoint of the straight slot; a preview of the slot will be attached to the cursor. Move the cursor and specify the width of the straight slot, as shown in Figure 2-45. The options in the **Slot PropertyManager** will be enabled once you draw the straight slot. You can modify the properties of the straight slot using the options available in the **Slot PropertyManager**.

Creating a Centerpoint Straight Slot

CommandManager:	Sketch > Slot flyout > Centerpoint Straight Slot
SOLIDWORKS menus:	Tools > Sketch Entities > Centerpoint Straight Slot
Toolbar:	Sketch > Slot flyout > Centerpoint Straight Slot



To draw a centerpoint straight slot, choose the **Centerpoint Straight Slot** button from the **Slot** flyout; the **Slot PropertyManager** will be displayed. Specify the center point of the slot by using the left mouse button. Next, move the cursor and specify the endpoint of the slot; a preview of the slot will be attached to the cursor. The options in the **Slot PropertyManager** will not be enabled at this stage. Move the cursor and specify the width of the centerpoint straight slot, as shown in Figure 2-46. The options in the **Slot PropertyManager** will be enabled once you draw the centerpoint straight slot. You can modify the properties of the centerpoint straight slot using the options in the **Slot PropertyManager**.

Evaluation Copy. Do not reproduce. For information visit www.cadcim.com

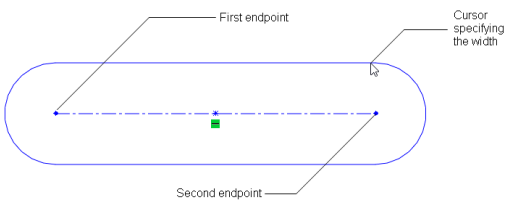

Figure 2-45 *Specifying the points to create a straight slot*

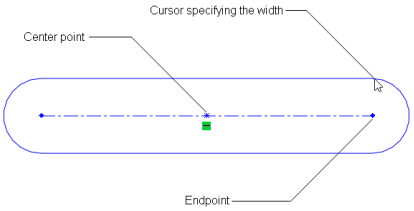

Figure 2-46 *Specifying the points to create a centerpoint straight slot*

Creating a 3 Point Arc Slot

CommandManager:	Sketch > Slot flyout > 3 Point Arc Slot
SOLIDWORKS menus:	Tools > Sketch Entities > 3 Point Arc Slot
Toolbar:	Sketch > Slot flyout > 3 Point Arc Slot



To create a 3 point arc slot, choose the **3 Point Arc Slot** button from the **Slot** flyout; the **Slot PropertyManager** will be displayed. You need to specify three points in the drawing area to create a 3 point arc slot. Move the cursor to the point where you want to specify the start point of the slot and then specify the start point of the slot by using the left mouse button. Note that as soon as you specify the start point, a reference arc will be attached to the cursor. Move the cursor to the location where you want to specify the second point of the slot and then click to specify the second point of the slot. Next, specify the third point of the slot; a preview of the 3 point arc slot will be attached to the cursor. The options in the **Slot PropertyManager** will not be enabled at this stage. Move the cursor and specify the width of the 3 point arc slot, as shown in Figure 2-47. The options in the **Slot PropertyManager** will be enabled once you draw the 3 point arc slot. You can modify the properties of the 3 point arc slot using the options available in the **Slot PropertyManager**.

Creating a Centerpoint Arc Slot

CommandManager:	Sketch > Slot flyout > Centerpoint Arc Slot
SOLIDWORKS menus:	Tools > Sketch Entities > Centerpoint Arc Slot
Toolbar:	Sketch > Slot flyout > Centerpoint Arc Slot



To create a centerpoint arc slot, choose the **Centerpoint Arc Slot** button from the **Slot** flyout; the **Slot PropertyManager** will be displayed. Specify the center point of the slot; a reference circle will be attached to the cursor. Move the cursor and specify the start point of the slot. Next, specify the endpoint of the slot by using the left mouse button; the preview of the centerpoint arc slot will be attached to the cursor. Next, move the cursor and specify the point to create the centerpoint arc slot, as shown in Figure 2-48.



Tip

*If the **Add dimension** check box is selected while creating slots, the dimensions will be added to them. Also, while creating straight slots, you can specify whether the center to center distance or the overall length of the slot is to be dimensioned.*

Evaluation Copy. Do not reproduce. For information visit www.cadcim.com

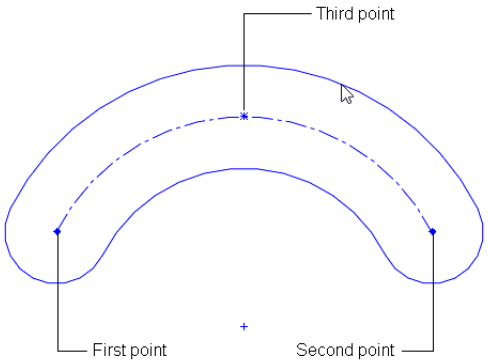

Figure 2-47 *Specifying points to create a 3 point arc slot*

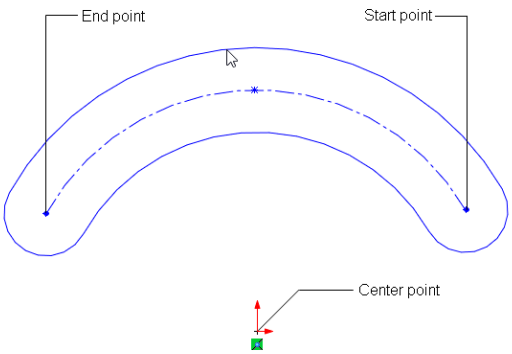

Figure 2-48 *Specifying points to create a centerpoint arc slot*

PLACING SKETCHED POINTS

CommandManager:	Sketch > Point
SOLIDWORKS menus:	Tools > Sketch Entities > Point
Toolbar:	Sketch > Point



To place a sketched point, choose the **Point** tool from the **Sketch CommandManager** and then specify the point on the screen where you want to place it; the **Point PropertyManager** will be displayed with the X and Y coordinates of the current point. You can change/shift the location of the point by modifying its X and Y coordinates in the **Point PropertyManager**.

DRAWING ELLIPSES

CommandManager:	Sketch > Ellipse flyout > Ellipse
SOLIDWORKS menus:	Tools > Sketch Entities > Ellipse
Toolbar:	Sketch > Ellipse flyout > Ellipse



In SOLIDWORKS, an ellipse is drawn by specifying its centerpoint and two ellipse axes by moving the mouse. To draw an ellipse, choose the **Ellipse** tool from the **Ellipse** flyout in the **Sketch CommandManager**; the arrow cursor will be replaced by the ellipse cursor. Move the cursor to the point that you want to specify as the centerpoint of the ellipse. Click the left mouse button at that point and then move the cursor to specify one of the ellipse axes. You will notice that a reference circle is drawn and two values are displayed above the ellipse cursor. The first value that shows R = * is the radius of the first axis or the major axis that you are defining and the second value that shows r = * is the radius of the other axis or minor axis of the ellipse. While defining the first axis, the second axis is taken equal to the first axis. Therefore, a reference circle is drawn, instead of a reference ellipse, as shown in Figure 2-49.

Evaluation Copy. Do not reproduce. For information visit www.cadcim.com

Specify a point on the screen to define the first axis. Next, move the cursor to size the other ellipse axis. As you move the cursor, the second value above the ellipse cursor that shows r = * and the value in the **Radius 2** spinner in the **Ellipse PropertyManager** will change dynamically. Specify a point in the drawing area to define the second axis of the ellipse, refer to Figure 2-50.

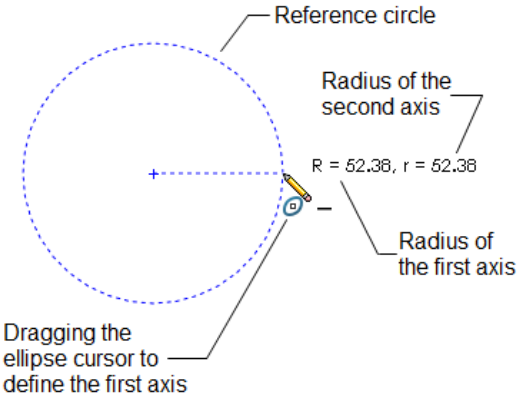

Figure 2-49 *Dragging the cursor to define the ellipse axis*

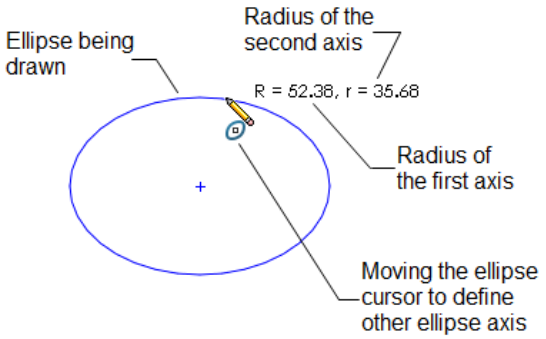

Figure 2-50 *Defining the second axis of the ellipse*

DRAWING ELLIPTICAL ARCS

CommandManager:	Sketch > Ellipse flyout > Partial Ellipse
SOLIDWORKS menus:	Tools > Sketch Entities > Partial Ellipse
Toolbar:	Sketch > Ellipse flyout > Partial Ellipse



In SOLIDWORKS, the process of drawing an elliptical arc is similar to that of drawing an ellipse. You will follow the same process of defining the ellipse first. The point that you specify on the screen to define the second axis of the ellipse is taken as the start point of the elliptical arc. You can define the endpoint of the elliptical arc by specifying a point on the screen, as shown in Figure 2-51.

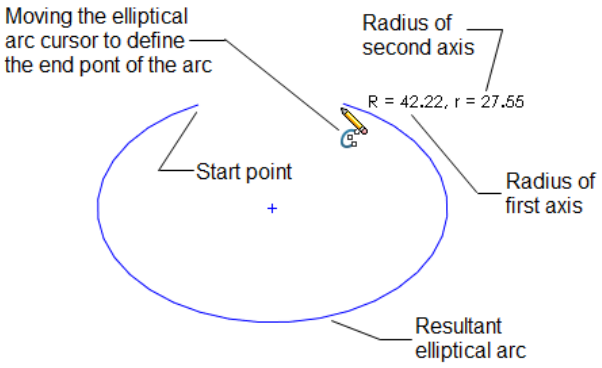

Figure 2-51 *Drawing an elliptical arc*

Evaluation Copy. Do not reproduce. For information visit www.cadcim.com

After drawing the elliptical arc, you can also modify its parameters in the **Parameters** rollout of the **Ellipse PropertyManager**, as shown in Figure 2-52.

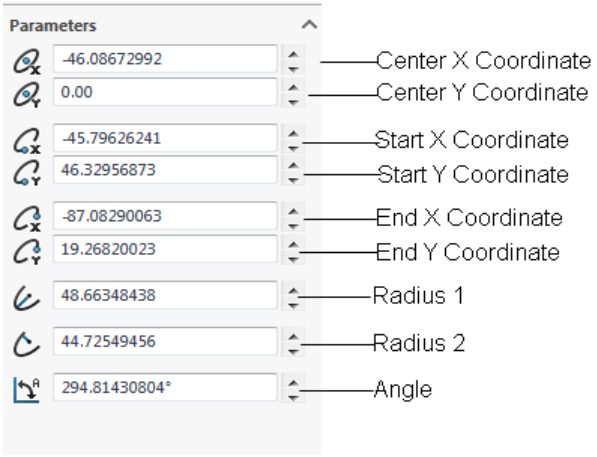

Figure 2-52 Parameters** rollout of the **Ellipse PropertyManager



Tip

In SOLIDWORKS, when you are in the sketching environment, press the S key to invoke the shortcut bar that contains the tools for sketching.

DRAWING PARABOLIC CURVES

CommandManager:	Sketch > Ellipse flyout > Parabola
SOLIDWORKS menus:	Tools > Sketch Entities > Parabola
Toolbar:	Sketch > Ellipse flyout > Parabola



In SOLIDWORKS, you can draw a parabolic curve by specifying the focus point, apex point, and then two endpoints of the parabolic curve. To draw a parabolic curve, choose the **Parabola** tool from the **Ellipse** flyout; the cursor will be replaced by the parabola cursor. Move the cursor to the point that you want to specify as the focal point of the parabola. Press the left mouse button once at that point. You will notice that a reference parabolic arc is displayed. Then, move the cursor to define the apex point and to size the parabola. As you move the cursor away from the focal point, the parabola will be flattened. After getting the basic shape of the parabolic curve, specify a point by using the left mouse button. This point is taken as the apex of the parabolic curve. Next, specify two points with respect to the reference parabola to define the guide of the parabolic curve, see Figure 2-53.

As you move the mouse after specifying the focal point of the parabola, the **Parabola PropertyManager** will be displayed with the options inactive. These options will be available only after you have drawn the parabola. Figure 2-54 shows the **Parameters** rollout of the **Parabola PropertyManager**.

Evaluation Copy. Do not reproduce. For information visit www.cadcim.com



Tip

*To dislodge the task pane, choose the **Auto Show** button and double-click on the gray bar at the top where its name is displayed. Now, you can move it at the desired location. To place it back on its original position, again double-click on the gray bar or choose the **Dock Task Pane** button provided at the top right corner of the task pane.*

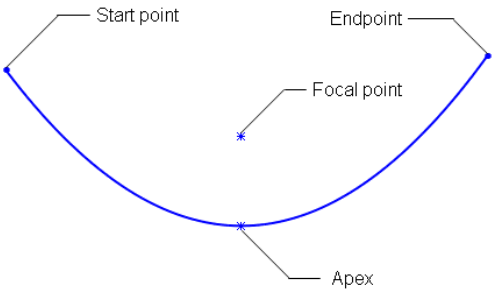

Figure 2-53 *Parabola and its parameters*

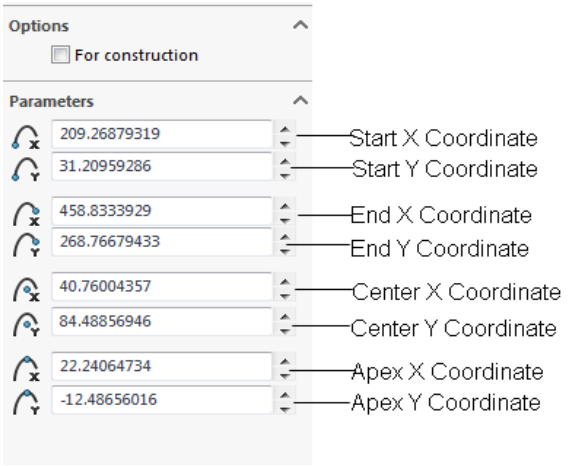

Figure 2-54 ***Parameters*** *rollout of the* ***Parabola PropertyManager***

DRAWING CONIC CURVES

CommandManager:	Sketch > Ellipse flyout > Conic
SOLIDWORKS menus:	Tools > Sketch Entities > Conic
Toolbar:	Sketch > Ellipse flyout > Conic



In SOLIDWORKS, you can draw a conic curve by specifying the endpoints and the Rho value. To create the conic curve, choose **Tools > Sketch Entities > Conic** from the SOLIDWORKS menus; the cursor will be replaced by the conic cursor. Click to specify the first end point of the conic curve and move the cursor away from it; a reference line will get attached to the cursor. Next, click to specify the second endpoint of the conic curve and move the cursor away from it; the preview of the conic curve will get attached to the cursor and will be displayed in yellow color. Additionally, the **Conic PropertyManager** will be displayed with its options inactive. As you move the cursor, the curve will change dynamically with the cursor movement, refer to Figure 2-55. Move the cursor to a distance and click to specify the top vertex of the conic curve to be drawn. A reference line will be generated and the Rho value will be displayed above the cursor. As you move the cursor, the Rho value of the conic curve will be modified accordingly. Click the left mouse button when the required Rho value is displayed above the conic cursor; the conic curve will be created and the options in the **Parameters** rollout of the **Conic PropertyManager** will be activated, refer to Figure 2-56. You can also modify the parameters of the conic curve drawn by using this PropertyManager.

Evaluation Copy. Do not reproduce. For information visit www.cadcim.com

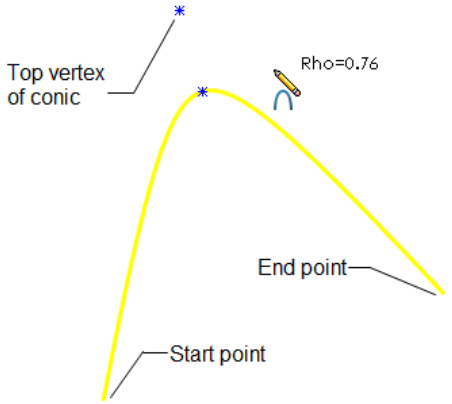

Figure 2-55 Conic and its parameters



Figure 2-56 Parameters** rollout of the **Conic PropertyManager

DRAWING DISPLAY TOOLS

The drawing display tools are one of the most important tools provided in any of the solid modeling software. These tools allow you to modify the display of a drawing by zooming or panning it. In SOLIDWORKS, some of these tools are displayed in the drawing area in the **View (Heads-Up)** toolbar. Some of the drawing display tools available in SOLIDWORKS are discussed in this chapter. The remaining tools will be discussed in the later chapters.

Zoom to Fit

View (Heads-Up): Zoom to Fit
SOLIDWORKS menus: View > Modify > Zoom to Fit



The **Zoom to Fit** tool available in the **View (Heads-Up)** toolbar is used to increase or decrease the drawing display area so that all the sketched entities or dimensions are fitted inside the current view. You can also press the F key to invoke this tool. Alternatively, double-click the middle mouse button in the drawing area to invoke this tool.

Zoom to Area

View (Heads-Up): Zoom to Area
SOLIDWORKS menus: View > Modify > Zoom to Area



The **Zoom to Area** tool available in the **View (Heads-Up)** toolbar is used to magnify a specified area so that the part of the drawing inside the magnified area can be viewed in the current window. The area is defined inside a window that is created by dragging the cursor. When you choose this button, the cursor is replaced by a magnifying glass cursor. Press and hold the left mouse button and drag the cursor to specify the opposite corners of the window. The area enclosed inside the window will be magnified.

Evaluation Copy. Do not reproduce. For information visit www.cadcim.com

Zoom In/Out

SOLIDWORKS menus: View > Modify > Zoom In/Out



The **Zoom In/Out** tool is used to dynamically zoom in or out the drawing. When you invoke this tool, the cursor will be replaced by the Zoom In/Out cursor. To zoom out of a drawing, press and hold the left mouse button and drag the cursor in the downward direction. Similarly, to zoom in a drawing, press and hold the left mouse button and drag the cursor in the upward direction. As you drag the cursor, the drawing display will be modified dynamically. After you get the desired view, exit this tool by right-clicking and choosing the **Select** option from the shortcut menu or by pressing the Esc key. If you have a mouse with scroll wheel, then scroll the wheel to zoom in/out of the drawing. You can also press the Z key to zoom out of a drawing and press the Shift+Z keys to zoom in the drawing.

Zoom to Selection

SOLIDWORKS menus: View > Modify > Zoom to Selection



The **Zoom to Selection** tool is used to modify the drawing display area such that the selected entity fits inside the current display. After selecting the entity, choose the **Zoom to Selection** tool; the drawing display area will be modified such that the selected entity fits inside the current view. Press and hold the Ctrl key while selecting multiple entities. In SOLIDWORKS, if you select an entity, a pop-up toolbar will be displayed in the drawing area and you can invoke the **Zoom to Selection** tool from it.

Pan

View (Heads-Up): Pan (Customize to Add)



The **Pan** tool is used to drag the view in the current display. You can also press the Ctrl key and the middle mouse button and then drag the cursor to move the entities.



Tip

*You can also invoke the **Pan** tool using the Ctrl key and the arrow keys on the keyboard. For example, to pan toward the right, press the Ctrl key and then press the right arrow key. Similarly, to pan upward, press the Ctrl key and then press the up arrow key.*

Previous View

View (Heads-Up): Previous View



The **Previous View** tool is used to display the last view of the model and it can be useful if you have zoomed the model at many levels. You can view the last ten views using this tool. You can invoke this tool from the drawing area or press the Ctrl+Shift+Z keys.

Evaluation Copy. Do not reproduce. For information visit www.cadcim.com

Redraw

SOLIDWORKS menus: View > Redraw



The **Redraw** tool is used to refresh the screen. Sometimes when you draw a sketched entity, some unwanted elements remain on the screen. To remove these unwanted elements from the screen, use this tool. The screen will be refreshed and all the unwanted elements will be removed. You can invoke this tool by pressing the Ctrl+R keys.



Tip

You can also invoke some of the drawing display tools from the shortcut menu. To do so, right-click and choose the ***Zoom/Pan/Rotate*** *option; a cascading menu will be displayed with different display tools.*

SHADED SKETCH CONTOURS

In SOLIDWORKS, you can view all the closed sketch contours and sub-contours in shaded mode by using the **Shaded Sketch Contours** setting. Using this setting, you can resize, move, and apply relations to different entities in a sketch. This setting makes it easier to determine whether the sketch is open or closed. This setting can be turned on by choosing **Tools > Sketch Settings > Shaded Sketch Contours** from the SOLIDWORKS menus. You can also directly extrude a closed contour using this setting. The Extrude feature is discussed in later chapters.

DELETING SKETCHED ENTITIES

You can delete the sketched entities by selecting them using the **Select** tool and then pressing the Delete key on the keyboard. You can select the entities individually or select more than one entity by defining a window or crossing around the entities. When you select the entities, they turn light blue. Now, press the Delete key. You can also delete the sketched entities by selecting them and choosing the **Delete** option from the shortcut menu that is displayed on right-clicking.

APPLYING GEOMETRIC RELATIONS TO SKETCHES

Geometric relations are the logical operations that are performed to add relationships such as tangent, perpendicular, or parallel between the sketched entities, planes, axes, edges, or vertices. The relations applied to the sketched entities are used to capture the design intent. Geometric relations constrain the degrees of freedom of the sketched entities. You can apply relations to a sketch by using the **Add Relations PropertyManager**.

Evaluation Copy. Do not reproduce. For information visit www.cadcim.com

Applying Relations Using the Add Relations PropertyManager

CommandManager: Sketch > Display/Delete Relations flyout > Add Relation
SOLIDWORKS menus: Tools > Relations > Add
Toolbar: Sketch > Display/Delete Relations flyout > Add Relation

The **Add Relations PropertyManager** is used to apply relations to a sketch in the sketching environment of SOLIDWORKS. To invoke this PropertyManager, choose the **Add Relation** button from the **Display/Delete Relations** flyout in the **Sketch CommandManager**, as shown in Figure 2-57. Alternatively, right-click on an entity in the drawing area and then choose the **Add Relation** option from the **Sketch Tools** cascading menu displayed. On doing so, the **Add Relations PropertyManager** will be displayed, refer to Figure 2-58. Also, the confirmation corner will be displayed at the top right corner of the drawing area. In the **Add Relations PropertyManager**, the **Selected Entities** rollout displays the name of the entities selected to apply relations. The selected entities are displayed in light blue and are added in the area below the **Selected Entities** rollout. The **Existing Relations** rollout displays the relations that are already applied to the selected sketch entities. The **Add Relations** rollout is used to apply the relations to the selected entity. This rollout contains a list of relations that you can apply to a selected entity or entities.

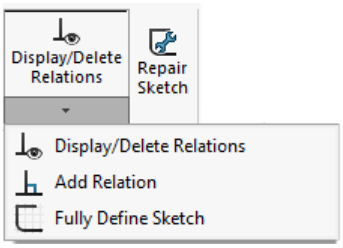

*Figure 2-57 Tools in the **Display/Delete Relations** flyout*

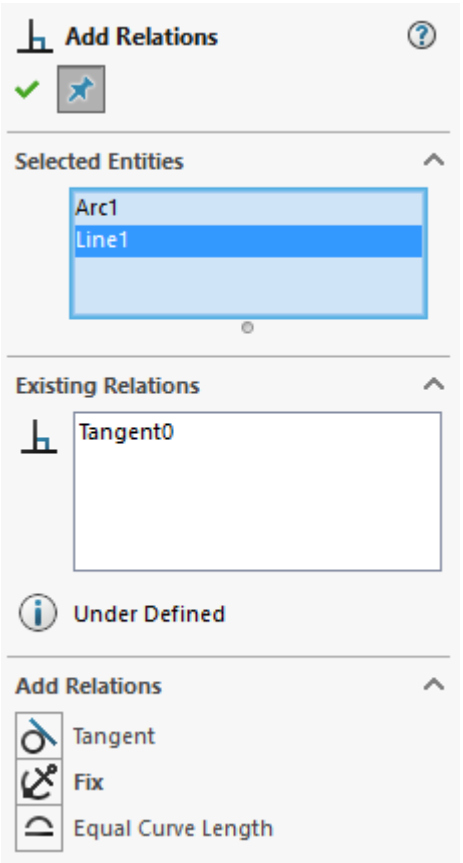

*Figure 2-58 The **Add Relations PropertyManager***

Evaluation Copy. Do not reproduce. For information visit www.cadcim.com

Note
Detailed description about relations is provided in Chapter 4.

DIMENSIONING A SKETCH

After drawing sketches and adding relations, the most important step in creating a design is dimensioning. As SOLIDWORKS is a parametric software, the entity on dimensioning is driven by the specified value irrespective of the original size. Therefore, when you apply and modify the dimension of an entity, it is forced to change its size based on the specified dimension value.

You can dimension any kind of entity by using the **Smart Dimension** tool available in the **Sketch CommandManager**. If you use the **Smart Dimension** tool, the type of dimension to be applied will depend on the type of entity selected. For example, if you select a line, then a horizontal, vertical, or aligned dimension will be applied. If you select a circle, a diametric dimension will be applied. Similarly, if you select an arc, a radial dimension will be applied. However, to apply a particular type of dimension, choose the required tool from the **Smart Dimension** flyout. You can also invoke these tools from the **Dimensions/Relations** toolbar.

On placing the dimension, the **Modify** dialog box will be displayed, as shown in Figure 2-59. You can modify the default dimension value by using the spinner or by entering a new value in the edit box available in the **Modify** dialog box. You can also drag the thumbwheel provided below the spinner to the right to increase and to the left to decrease the value.

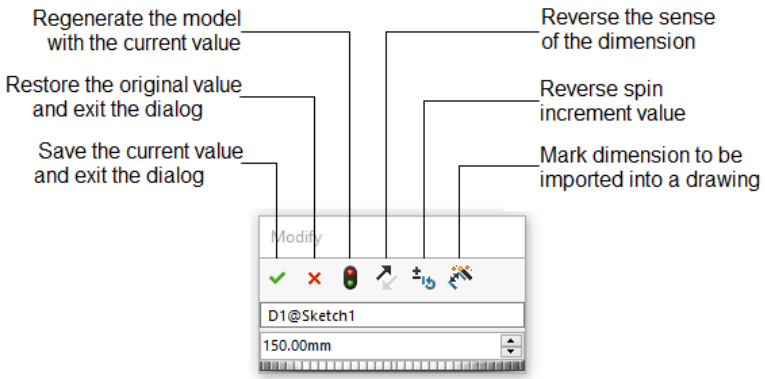

Figure 2-59 *The* ***Modify*** *dialog box*

Note
Detailed description about dimensions is provided in Chapter 4.

Evaluation Copy. Do not reproduce. For information visit www.cadcim.com

CREATING BASE FEATURES BY EXTRUDING SKETCHES

CommandManager:	Features > Extruded Boss/Base
SOLIDWORKS Menus:	Insert > Boss/Base > Extrude
Toolbar:	Features > Extruded Boss/Base > Extruded Boss/Base



The sketches that you have drawn can be converted into base features by extruding the sketch using the **Boss-Extrude PropertyManager**. The **Boss-Extrude PropertyManager** can be invoked using the **Extruded Boss/Base** button from the **Features CommandManager**. After drawing the sketch, choose the **Extruded Boss/Base** tool from the **Features CommandManager**; the sketching environment will be closed and the part modeling environment will be invoked. Also, the preview of the feature that is created using the default options will be displayed in the trimetric view. The trimetric view displays a better view of the solid feature. You can enter the depth value in the **Depth** edit box and then choose the **OK** button to close the **Boss-Extrude PropertyManager**.



Note

*The detailed explanation about the other options of **Extrude PropertyManager** is provided in Chapter 5.*

STARTING A NEW DRAWING DOCUMENT FROM THE PART DOCUMENT

This method of starting a new drawing document is recommended when the part or the assembly document for which you want to generate the drawing views is opened in another window. In this case, choose **New > Make Drawing from Part/Assembly** from the SOLIDWORKS Menu Bar of the part or the assembly document; the **Sheet Format/Size** dialog box will be displayed. You can select the desired format and size of the sheet from this dialog box. On selecting the format and size, the new document will start with the set format and size and the **View Palette** task pane will be displayed on the right in the drawing window. The **View Palette** task pane displays the preview of all the views of the component in the part file that was used to start this drawing file. You can drag the required view from this task pane to the drawing sheet. As you drag a view to the drawing sheet, the **Projected View PropertyManager** will be displayed for creating the projected views.



Note

The detailed explanation about generating drawing views is provided in Chapter 13.

TUTORIALS

Tutorial 1

In this tutorial, you will draw the basic sketch of the revolved solid model shown in Figure 2-60. The sketch of this model is shown in Figure 2-61. Do not dimension the sketch as the solid model and its dimensions are given for your reference only. **(Expected time: 30 min)**

Evaluation Copy. Do not reproduce. For information visit www.cadcim.com

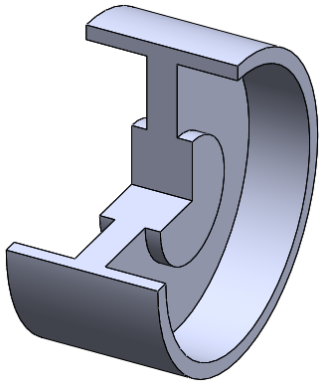

Figure 2-60 *Revolved solid model for Tutorial 1*

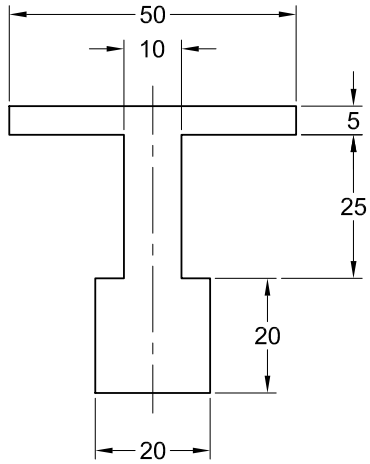

Figure 2-61 *Sketch of the revolved solid model*

The following steps are required to complete this tutorial:

a. Start a new part document.
b. Invoke the sketching environment.
c. Modify the settings of the snap and grid so that the cursor jumps through a distance of 5 mm.
d. Draw the sketch of the model using the **Line** tool.
e. Save the sketch and then close the document.

Opening a New Part Document

1. Start SOLIDWORKS by double-clicking on the shortcut icon of SOLIDWORKS 2023 available on the desktop of your computer; the SOLIDWORKS 2023 window along with the **Welcome - SOLIDWORKS** dialog box is displayed.

2. Choose the **Part** button available in the **New** area of the **Home** tab in the **Welcome - SOLIDWORKS** dialog box. A new SOLIDWORKS part document is invoked. You can also select the **New** button from the Menu Bar; the **New SOLIDWORKS Document** dialog box is displayed, as shown in Figure 2-62.

Evaluation Copy. Do not reproduce. For information visit www.cadcim.com

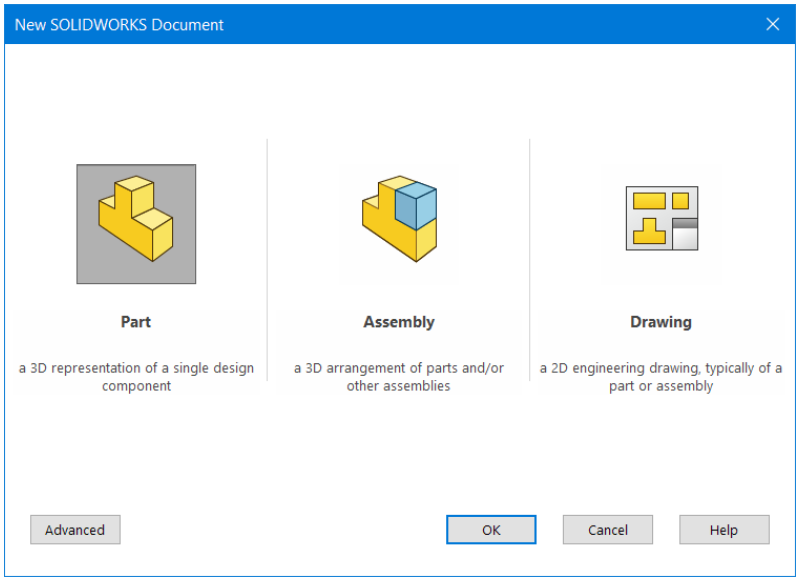

Figure 2-62 *The* ***New SOLIDWORKS Document*** *dialog box*

3. In the **New SOLIDWORKS Document** dialog box, the **Part** button is chosen by default. Therefore, choose the **OK** button; a new SOLIDWORKS part document starts.

   You need to invoke the sketching environment to draw the sketch.

4. Choose the **Sketch** tab from the **CommandManager** and then select the **Sketch** tool from the **Sketch CommandManager**; the **Edit Sketch PropertyManager** is displayed and you are prompted to select a plane on which you want to draw the sketch.



5. Select the **Front Plane** from the drawing area; the sketching environment is invoked and the plane gets oriented normal to the view. You will notice that red colored arrows are displayed at the center of the screen indicating that you are in the sketching environment. Also, the confirmation corner with the **Exit Sketch** and **Cancel** options is displayed on the upper right corner in the graphics area. The screen display in the sketching environment of SOLIDWORKS 2023 is shown in Figure 2-63.



Tip

In SOLIDWORKS 2023, you can set that the orientation of the sketching plane becomes automatically parallel to the screen whenever you start a new sketch or edit an existing sketch. This setting can be toggled by selecting the ***Auto-rotate view normal to sketch plane on sketch creation and sketch edit*** *check box in the* ***Sketch*** *area in the* ***System Options - General*** *dialog box.*

Evaluation Copy. Do not reproduce. For information visit www.cadcim.com

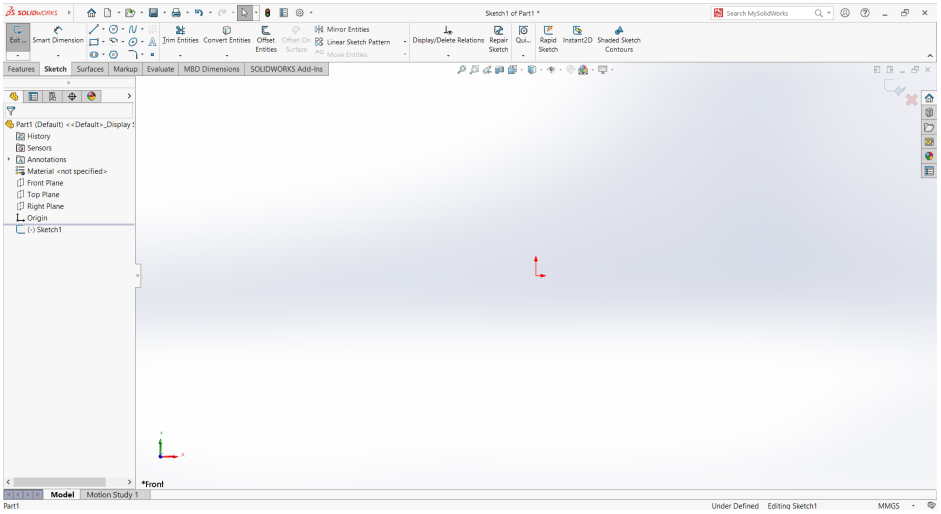

Figure 2-63 *Screen display in the sketching environment*

Modifying the Snap, Grid, and Dimensioning Unit Settings

It is assumed that while installing SOLIDWORKS, you have selected the **MMGS (millimeters, gram, second)** option for measuring the length. Therefore, the length of an entity will be measured in millimeters in the current file. But, if you have selected some other unit at the time of installation, you need to change the linear and angular unit settings before drawing the sketch. For this tutorial, you need to modify the grid and snap settings so that the cursor jumps through a distance of 5 mm.

1. Choose the **Options** button from the Menu Bar; the **System Options - General** dialog box is displayed.

2. Choose the **Document Properties** tab; the name of the dialog box changes to the **Document Properties - Drafting Standard**.



Note

If you have selected millimeters as the unit of measurement while installing SOLIDWORKS, skip steps 3 and 4 in this section.

3. Select the **Units** option from the area on the left to display the options related to the linear and angular units.

4. Select the **MMGS (millimeter, gram, second)** radio button in the **Unit system** area. Also, select the **degrees** option in the **Unit** column as unit of angle if not selected by default. You can also change the unit system using the **Unit system** button located at the right-side of the status bar.

   It is evident from Figure 2-61 that the dimensions in the sketch are multiples of 5. Therefore, you need to modify the grid and snap settings so that the cursor jumps through a distance of 5 mm instead of 10 mm.

Evaluation Copy. Do not reproduce. For information visit www.cadcim.com

5. Select the **Grid/Snap** option from the area on the left to display grid options. Set the value in the **Major grid spacing** spinner to **50** and the value in the **Minor-lines per major** spinner to **10**.

6. Select the **Display grid** check box if it is cleared. Next, choose the **Go To System Snaps** button; the system options related to relations and snaps are displayed.

7. Select the **Grid** check box from the **Sketch snaps** area and clear the **Snap only when grid is displayed** check box. Choose **OK** to exit the dialog box.

   Note that in the sketching environment, the lower right corner of the drawing area displays the information about the status of the sketch and location of the cursor in the X, Y, and Z coordinates. You will use the coordinates displayed to draw the sketch of the model. These coordinates will be modified as you move the cursor around the drawing area. If you move the cursor after initial settings, the coordinates will show an increment of 5 mm instead of the default increment of 10 mm.

Drawing the Sketch

It is evident from Figure 2-61 that the sketch will be drawn using the **Line** tool. Therefore, you need to start drawing the sketch from the lower left corner of the sketch.

1. Choose the **Line** tool from the **Sketch CommandManager**; the arrow cursor is replaced by the line cursor. 

2. Move the line cursor to the origin.

3. Left-click at this point and move the cursor horizontally toward the right. You will notice that the symbol of the **Horizontal** relation is displayed below the line cursor and the length and angle of the line are displayed above the line cursor.

4. Left-click again when the length of the line above the line cursor shows 20.

   The first horizontal line is drawn. As you are drawing continuous lines, the endpoint of the line drawn is automatically selected as the start point of the next line.

5. Move the line cursor vertically upward. The symbol of **Vertical** relation is displayed on the right of the line cursor and the length of the line is displayed above the line cursor. Click when the length of the line on the line cursor is displayed as 20.

6. Move the cursor horizontally toward the left and click when the length of the line on the line cursor is displayed as 5.

7. Move the line cursor vertically upward and press the left mouse button when the length of the line on the line cursor is displayed as 25.

8. Move the line cursor horizontally toward the right and click when the length of the line on the line cursor is displayed as 20.

Evaluation Copy. Do not reproduce. For information visit www.cadcim.com

9. Move the line cursor vertically upward and click when the length of the line on the line cursor is displayed as 5.

10. Press F on the keyboard to fit the sketch on the screen.

11. Move the line cursor horizontally toward the left and click when the length of the line on the line cursor is displayed as 50.

12. Move the line cursor vertically downward and click when the length of the line on the line cursor is displayed as 5.

13. Move the line cursor horizontally toward the right and press the left mouse button when the length of the line on the line cursor is displayed as 20.

14. Move the line cursor vertically downward and click when the length of the line on the line cursor is displayed as 25.

15. Move the line cursor horizontally toward the left and click when the length of the line on the line cursor is displayed as 5.

16. Move the line cursor vertically downward to the start point of the first line. Click when an orange circle is displayed; the final sketch for Tutorial 1 is created, as shown in Figure 2-64.

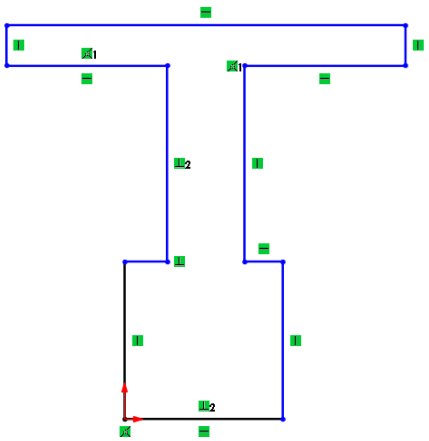

Figure 2-64 *Final sketch for Tutorial 1*

In this figure, the grid display and **Shaded Sketch Contours** settings are turned off for clarity.

17. Right-click and then choose the **Select** option from the shortcut menu to exit the **Line** tool.



Note

In Figure 2-64, the display of relations is turned on. To turn off the display of relations, choose the ***View Sketch Relations*** *button from the* ***Hide/Show Items*** *flyout in the* ***View (Head-Up)*** *toolbar.*

Evaluation Copy. Do not reproduce. For information visit www.cadcim.com



Tip

*To turn off the grid display, right-click in the drawing area to display a shortcut menu. Choose the **Display Grid** button to turn off the grid display. This is a toggle button.*

Saving the Sketch

It is recommended that you create a separate folder for saving the tutorial files of this book. Next, you can save the tutorials of a chapter in the folder of that chapter.



1. Choose the **Save** button from the Menu Bar to invoke the **Save As** dialog box. Create the *SOLIDWORKS* folder inside the *\Documents* folder and then create the *c02* folder inside the *SOLIDWORKS* folder.

2. Enter **c02_tut01** as the name of the document in the **File name** edit box and choose the **Save** button. The document is saved at the location *\Documents\SOLIDWORKS\c02*.

3. Close the document by choosing **File** > **Close** from the SOLIDWORKS menus.

Tutorial 2

In this tutorial, you will create the model shown in Figure 2-65. To create this model, you will first create the sketch of the base feature by using the sketching tools. Also, you will modify and edit the sketch using various modifying options. The dimensions required to create the base sketch for the model are shown in Figure 2-66. The extrusion depth of the model is 30 mm. After creating the model, you will create a new drawing document, generate the views of the model, and place them on a drawing sheet. **(Expected time: 30 min)**

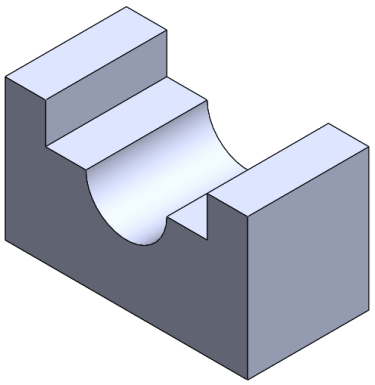

Figure 2-65 *Solid model for Tutorial 2*

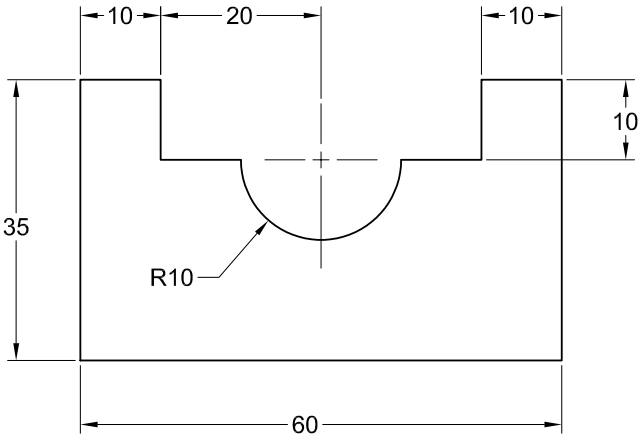

Figure 2-66 *Sketch for Tutorial 2*

Evaluation Copy. Do not reproduce. For information visit www.cadcim.com

The following steps are required to complete this tutorial:

a. Start SOLIDWORKS and then start a new part document.
b. Invoke the sketching environment.
c. Draw the sketch using the **Line** tool.
d. Adding relations and dimensions to the sketch.
e. Extruding the sketch.
f. Saving the model.
g. Generating the front and isometric views of the model.
h. Save the drawing and then close the file.

Starting SOLIDWORKS and a New Part Document

1. Start SOLIDWORKS by double-clicking on the shortcut icon of SOLIDWORKS 2023 available on the desktop of your computer, the SOLIDWORKS 2023 window along with the **WELCOME - SOLIDWORKS** dialog box is displayed.

2. Choose the **New** button from the Menu Bar; the **New SOLIDWORKS Document** dialog box is displayed. In this dialog box, the **Part** button is chosen by default.

3. Choose the **OK** button from the **New SOLIDWORKS Document** dialog box; a new SOLIDWORKS part document is started.

4. Choose the **Sketch** button from the **Sketch CommandManager** and then select the **Front Plane** to invoke the sketching environment.

5. Set the unit for measuring linear dimensions to millimeters and the unit for angular dimensions to degree. To do so, click on the **Unit system** option at the bottom right corner of the window; a flyout is displayed. Select the **Edit Document Units** option, the **Document Properties - Units** dialog box is displayed. Select the **MMGS (millimeter, gram, second)** radio button from the dialog box if it is not selected and choose the **OK** button to close the dialog box.

Drawing the Sketch

The sketch will be drawn using the **Line** tool. The arc in the sketch will also be drawn using the same tool. You need to start the drawing from the lower left corner of the sketch.

1. Invoke the **Line** tool by pressing the L key; the arrow cursor is replaced by the line cursor.

2. Click at the origin and move the cursor horizontally toward the right. Next, click to specify the endpoint of the line when a value close to 60 is displayed above the line.

3. Move the line cursor vertically upward and click when a value close to 35 is displayed above the line.

4. Choose the **Zoom to Fit** button from the **View (Heads-Up)** toolbar to fit the sketch into the screen. 

Evaluation Copy. Do not reproduce. For information visit www.cadcim.com

As mentioned earlier, you can invoke the drawing display tools while some other tools are still active. After modifying the drawing display area, the **Line** tool that was active before invoking the drawing display tool will be restored and you can continue drawing lines using the **Line** tool.

5. Move the line cursor horizontally toward the left and click when a value close to 10 is displayed above the line.

6. Move the line cursor vertically downward and click when a value close to 10 is displayed above the line.

7. Move the line cursor horizontally toward the left and click when a value close to 10 is displayed above the line.

Next, you need to draw an arc normal to the last line using the **Line** tool. It is recommended to use the **Line** tool when you need to draw a sketch that is a combination of lines and arcs. This increases productivity by reducing the time taken in invoking tools for drawing an arc and a line.

8. Move the line cursor away from the endpoint of the last line and then move it back close to the endpoint; the arc mode is invoked.

9. Move the arc cursor vertically downward and then toward the left and then click when the radius value close to 10 and angle value close to 180° are displayed; an arc normal to the last line is drawn and the line mode is invoked.

10. Move the line cursor horizontally toward the left and click when a value close to 10 is displayed above the line.

11. Move the line cursor vertically upward and click when a value close to 10 is displayed above the line.

12. Move the line cursor horizontally toward the left and click when a value close to 10 is displayed above the line.

13. Move the line cursor to the start point of the first line and click when an orange circle is displayed.

14. Press the Esc key to exit the **Line** tool.

This completes the sketch. However, you need to modify the drawing display area such that the sketch fits the screen.

15. Press the F key to modify the drawing display area. The sketch is shown in Figure 2-67.

Evaluation Copy. Do not reproduce. For information visit www.cadcim.com

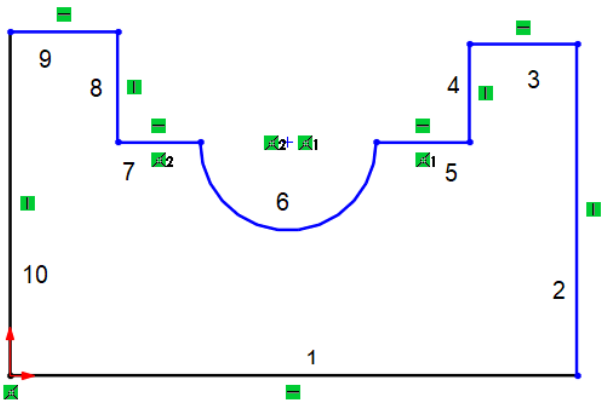

Figure 2-67 *Sketch drawn using the* ***Line*** *tool*

Adding Relations to the Sketch

After drawing the sketch, you need to add relations to it by using the **Add Relations PropertyManager**. Relations are applied to a sketch to constrain its degrees of freedom, reduce the number of dimensions in the sketch, and capture the design intent of the sketch.

1. Choose the **Add Relation** button from the **Display/Delete Relations** flyout in the **Sketch CommandManager**; the **Add Relations PropertyManager** is displayed.

2. Select the line 3, line 4, line 5, line 7, line 8 and then the line 9. The names of the selected entities are displayed in the **Selected Entities** rollout of the **Add Relations PropertyManager**.

   The relations that can be applied to the selected entities are displayed in the **Add Relations** rollout of the **Add Relations PropertyManager**.

3. Choose the **Equal** button from the **Add Relations** rollout to apply the **Equal** relation to the selected entities.

4. Move the cursor to the drawing area and right-click to display the shortcut menu. Choose the **Clear Selections** option from the shortcut menu to remove the selected entities from the selection set. You will notice that in Figure 2-68 an equal relationship is applied between the line 3, line 4, line 5, line 7, line 8 and line 9.

5. Choose the **OK** button from the **Add Relations PropertyManager** to close the PropertyManager. Refer to Figure 2-68 to view the relations applied to the sketch. Click anywhere in the drawing area to clear the selected entities.

Applying Dimensions to the Sketch

Next, you will apply dimensions to the sketch and fully define it. As mentioned earlier, the sketched entities are shown in blue indicating that the sketch is underdefined. After the required dimensions are applied, the sketched entities will turn black indicating that the sketch is fully defined now.

Evaluation Copy. Do not reproduce. For information visit www.cadcim.com

1. Choose **Tools > Options** from the Menu Bar; the **System Options - General** dialog box is displayed. Select the **Input dimension value** check box, if cleared, and then choose the **OK** button from the **System Options - General** dialog box. This check box is selected to invoke the **Modify** dialog box. This dialog box is used to enter a new dimension value and modify the sketch as you place the dimension.

2. Choose the **Smart Dimension** tool from the **Smart Dimension** flyout in the **Sketch CommandManager**; the select cursor is replaced by the dimension cursor. Alternatively, right-click in the drawing area and choose the **Smart Dimension** option from the shortcut menu displayed to invoke the **Smart Dimension** tool. You can also use the Mouse Gesture to invoke this tool.

3. Move the cursor to the line 1 and click when the color of the line changes to orange; a horizontal dimension is attached to the cursor.

4. Place it at a suitable location; the **Modify** dialog box is displayed. Enter **60** in this dialog box and press Enter, refer to Figure 2-68.

5. Move the cursor to the line 2 and click when the color of line turns orange; a vertical dimension is attached to the cursor.

6. Place it at a suitable location; the **Modify** dialog box is displayed. Enter **35** in this dialog box and press Enter, refer to Figure 2-68.

7. Move the cursor to the line 3 and click when its color turns orange.

8. Place it at a suitable location; the **Modify** dialog box is displayed. Enter **10** in this dialog box and press Enter. The fully defined sketch is shown in Figure 2-68.

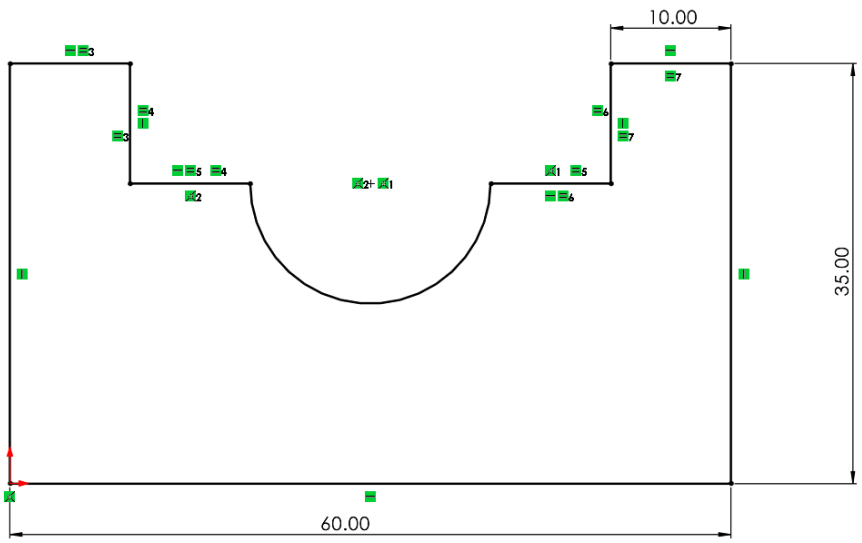

Figure 2-68 *The fully defined sketch*

Evaluation Copy. Do not reproduce. For information visit www.cadcim.com

Extruding the Sketch

Next, you need to invoke the **Extruded Boss/Base** tool and extrude the sketch using the parameters given in the tutorial description.

1. Choose the **Extruded Boss/Base** button from the **Features CommandManager**; the sketch is automatically oriented to the trimetric view and the **Boss-Extrude PropertyManager** is displayed, as shown in Figure 2-69.

   As you are converting the closed sketch into a feature, the depth value is only displayed in the **Direction 1** rollout of the **Boss-Extrude PropertyManager**. Also, a preview of the feature is displayed in the temporary shaded graphics with the default values.

2. Make sure that the value in the **Depth** spinner is 30.

3. Choose the **OK** button to create the feature or choose **OK** from the confirmation corner.

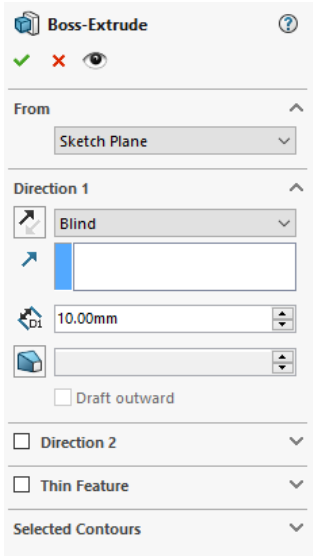

Figure 2-69** The **Boss-Extrude PropertyManager

   It is recommended that you change the view to isometric after creating the feature so that you can view it properly.

4. Choose the **View Orientation** button from the **View (Heads-Up)** toolbar; a flyout is displayed. Choose the **Isometric** button from it. If the origin is displayed, turn off the display of the origin in the model by choosing **Hide/Show Items > View Origins** from the **View (Heads-Up)** toolbar. The isometric view of the resulting solid model is shown in Figure 2-70.

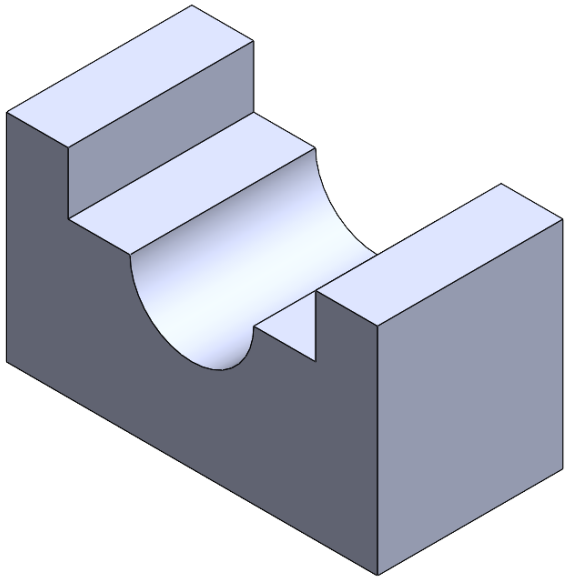

***Figure 2-70** Isometric view of the solid model*

Evaluation Copy. Do not reproduce. For information visit www.cadcim.com

Saving the Model

1. Choose the **Save** button from the Menu Bar to invoke the **Save As** dialog box.



2. Enter **c02_tut02** as the name of the document in the **File name** edit box. Choose the **Save** button and then save the file at the location *\Documents\SOLIDWORKS\c02*.

Starting a New Drawing Document and Placing the Views on a Sheet

As mentioned in the tutorial description, you need to start a new drawing document, generate the views of the model and then place them on a drawing sheet. This is done by using the **Make Drawing from Part** tool.

1. Choose **File > Make Drawing from Part** from the SOLIDWORKS menus; the **Sheet Format/Size** dialog box is displayed.

2. Select **A1(ISO)** from the list box available below the **Standard sheet size** radio button and then choose the **OK** button; a new document is started with the set format and size and the **View Palette** task pane is displayed on the right in the drawing window.

3. Drag the Isometric view from the **View Palette** and place it at the top right corner of the drawing sheet, refer to Figure 2-71; the **View Palette** task pane is closed and the **Drawing View PropertyManager** is displayed.

4. Choose the **Close Dialog** button from the **Drawing View PropertyManager**.



Note

*The **Drawing View PropertyManager** will be displayed only if you drag and drop the Isometric view first instead of any plan or elevation view from the **View Palette** task pane.*

5. Click on the **View Palette** tab to invoke the **View Palette** task pane again. Next, drag and drop the **Front** view on the sheet, refer to Figure 2-71; the **Projected View PropertyManager** is displayed and you are prompted to select a location to place the new view.

6. Next, choose the **OK** button from the **Projected View PropertyManager**.

Evaluation Copy. Do not reproduce. For information visit www.cadcim.com

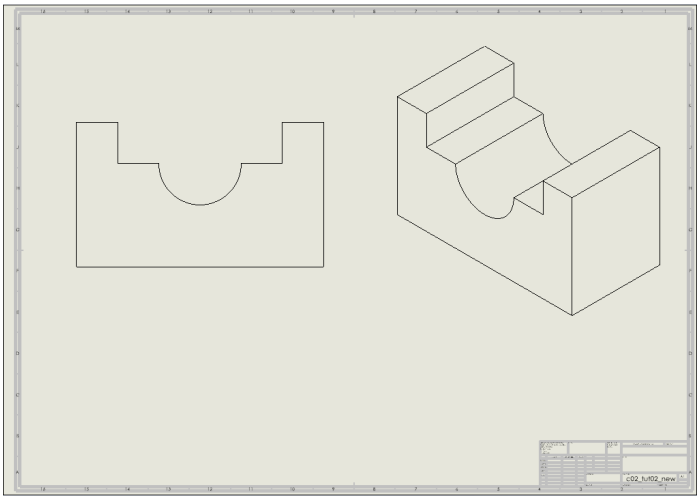

Figure 2-71 *Views placed on the drawing sheet*

Saving the Drawing

As the name of the document is specified in the beginning, you need to choose the **Save** button to save the document.

1. Choose the **Save** button from the Menu Bar to invoke the **Save As** dialog box.



2. Enter **c02_tut02** as the name of the document in the **File name** edit box and choose the **Save** button; the document is saved at the location *\Documents\SOLIDWORKS\c02*.

3. Close the document by choosing **File > Close** from the SOLIDWORKS menus.

Tutorial 3

In this tutorial, you will create the model shown in Figure 2-72. To create this model, you will first create the sketch of the base feature by using the sketching tools. Also, you will modify and edit the sketch using various modifying options. The dimensions required to create the base sketch for the model are shown in Figure 2-73. The extrusion depth of the model is 30 mm. After creating the model, you will create a new drawing document, generate the views of the model, and place them on a drawing sheet.

(Expected time: 30 min)

The following steps are required to complete this tutorial:

a. Start SOLIDWORKS and then start a new part file.
b. Invoke the sketching environment.
c. Draw the outer loop of the sketch using the **Line** tool.
d. Draw the inner circle using the **Circle** tool.

Evaluation Copy. Do not reproduce. For information visit www.cadcim.com

e. Add relations and dimensions to the sketch.
f. Extrude the sketch.
g. Save the model.
h. Generate the front and isometric views of the model.
i. Save and close the drawing file.

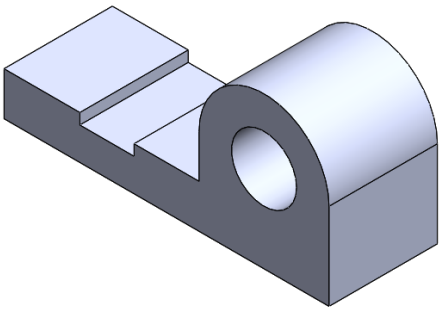

Figure 2-72 Solid model for Tutorial 3

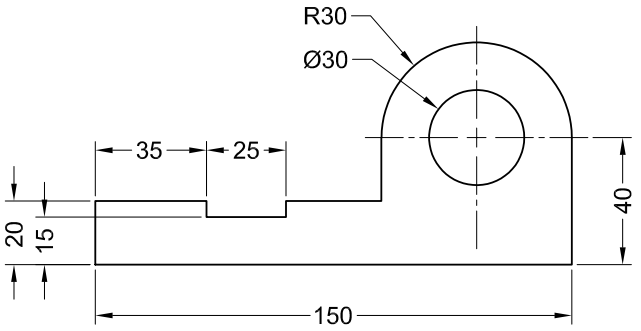

Figure 2-73 Sketch for Tutorial 3

Starting a New File

1. Choose the **New** button from the Menu Bar to invoke the **New SOLIDWORKS Document** dialog box. Make sure the **Part** button is chosen in this dialog box.

2. Choose the **OK** button from the dialog box; a new SOLIDWORKS part document is started.

   To draw the sketch of the model, you need to invoke the sketching environment.

3. Choose the **Sketch** button from the **Sketch CommandManager**; the **Edit Sketch PropertyManager** is displayed.

4. Select **Front Plane** from the drawing area; the sketching environment is invoked. Also, the confirmation corner is displayed with the **Exit Sketch** and **Cancel** options at the upper right corner of the drawing area.

Drawing the Outer Loop

It is evident from Figure 2-73 that the sketch consists of an outer loop and an inner circle. Therefore, this sketch will be drawn using the **Line** and **Circle** tools. You will start drawing from the lower left corner of the sketch. As the length of the lower horizontal line is 150 mm, you need to modify the drawing display area such that the drawing area in the first quadrant is increased. This can be done by using the **Pan** tool.

1. Press the Ctrl key and the middle mouse button, and then drag the cursor toward the bottom left corner of the screen.

   You will notice that the origin is also moved toward the bottom left corner of the screen, thus increasing the drawing area in the first quadrant.

2. After dragging the origin close to the lower left corner, release the Ctrl key and middle mouse button.

Evaluation Copy. Do not reproduce. For information visit www.cadcim.com

3. Choose the **Line** button from the **Sketch CommandManager**.

4. Click at the origin to specify the start point of the line.

5. Move the cursor horizontally toward the right and click when a value close to 150 is displayed above the line.

6. Next, move the line cursor vertically upward and click when a value close to 40 is displayed above the line.

   The next entity to be drawn is a tangent arc. The tangent arc will be drawn by invoking the arc mode using the **Line** tool.

7. Move the line cursor away from the endpoint of the last line and then move it back to the endpoint; the arc mode is invoked and the line cursor is replaced by the arc cursor.

8. Move the arc cursor vertically upward to a small distance and then move it to the left when the dotted line is displayed.

   You will notice that a tangent arc is being drawn. The angle of the tangent arc and its radius are displayed above the arc cursor.

9. Click when the angle value above the arc cursor displays a value close to 180 and the radius displays a value close to 30 to complete the arc.

   The required tangent arc is drawn. As mentioned earlier, the line mode is automatically invoked after you have drawn the arc by using the **Line** tool.

10. Move the line cursor vertically downward and click when a value close to 20 is displayed above the line.

11. Move the line cursor horizontally toward the left and click when a value close to 30 is displayed above the line.

12. Move the line cursor vertically downward and click when a value close to 5 is displayed above the line.

13. Move the line cursor horizontally toward the left and click when a value close to 25 is displayed above the line.

14. Move the line cursor vertically upward and click when a value close to 5 is displayed above the line.

15. Move the line cursor horizontally toward the left and click when a value close to 35 is displayed above the line.

16. Move the line cursor to the start point of the first line. Click when an orange circle is displayed.

Evaluation Copy. Do not reproduce. For information visit www.cadcim.com

17. Right-click and then choose **Select** from the shortcut menu to exit the **Line** tool.

18. Choose the **Zoom to Fit** button from the **View (Heads-Up)** toolbar to fit the sketch into the screen. This completes the outer loop of the sketch. The sketch after drawing the outer loop appears, as shown in Figure 2-74.

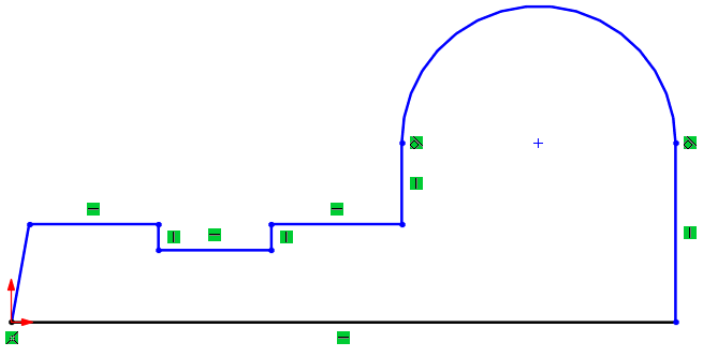

Figure 2-74 *Sketch using Line tool*



Tip

If the arc mode is invoked by mistake while drawing continuous lines, press the A key; the line mode will be invoked again.

Drawing the Circle

The circle in the sketch will be drawn using the **Circle** tool. The centerpoint of the circle will be the centerpoint of the arc, which is represented by a plus sign. The plus sign is automatically drawn when you draw an arc. You can select this centerpoint to draw the circle.

1. Choose the **Circle** button from the **Circle** flyout in the **Sketch CommandManager**; the **Circle PropertyManager** is invoked.

2. Move the circle cursor close to the centerpoint of the arc and click when an orange circle is displayed.

3. Move the cursor toward the left and click when the radius of the circle above the circle cursor displays a value close to 15; a circle is drawn.

4. Right-click and then choose the **Select** option from the shortcut menu to exit the **Circle** tool.

Evaluation Copy. Do not reproduce. For information visit www.cadcim.com

The sketch is shown in Figure 2-75.

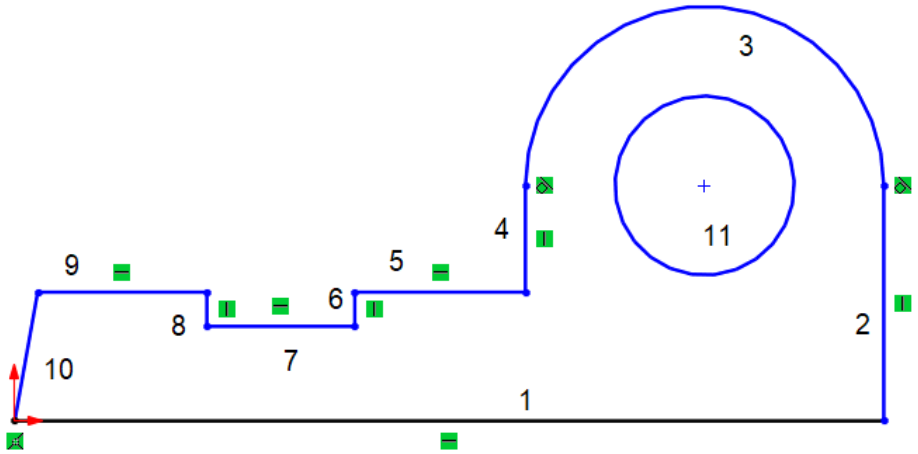

Figure 2-75 *Sketch using the* ***Circle*** *tool*

Adding Relations to the Sketch

After drawing the sketch, you need to add relations to it by using the **Add Relations PropertyManager**. Relations are applied to a sketch to constrain its degrees of freedom, reduce the number of dimensions in the sketch, and capture the design intent of the sketch.

1. Choose the **Add Relation** button from the **Display/Delete Relations** flyout in the **Sketch CommandManager**; the **Add Relations PropertyManager** is displayed. Also, the confirmation corner is displayed at the upper right corner of the drawing area.

2. Select the line 10. The names of the selected entities are displayed in the **Selected Entities** rollout of the **Add Relations PropertyManager**.

   The relations that can be applied to the selected entity are displayed in the **Add Relations** rollout of the **Add Relations PropertyManager**.

3. Choose the **Vertical** button from the **Add Relations** rollout to apply the **Vertical** relation to the selected entity.

4. Move the cursor to the drawing area and right-click to display the shortcut menu. Choose the **Clear Selections** option from the shortcut menu to remove the selected entities from the selection set. You will notice that a vertical relationship is applied to the line.

5. Select the line 5 and line 9 and choose the **Collinear** button from the **Add Relations** rollout to apply the **Collinear** relation to the selected entities. Refer to Figure 2-76 after applying

Evaluation Copy. Do not reproduce. For information visit www.cadcim.com

relations.

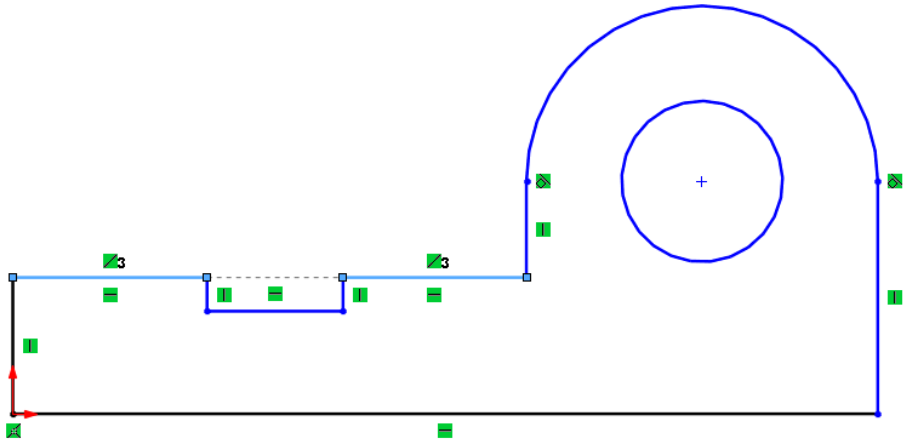

Figure 2-76 *Sketch after relationship*

6. Choose the **OK** button from the **Add Relations PropertyManager** or choose **OK** from the confirmation corner to close the PropertyManager. Click anywhere in the drawing area to clear the selected entities.

Applying Dimensions to the Sketch

Next, you will apply dimensions to the sketch and fully define it. As mentioned earlier, the sketched entities are shown in blue indicating that the sketch is underdefined. After the required dimensions are applied, the sketched entities will turn black indicating that the sketch is fully defined now.

1. Choose the **Smart Dimension** tool from the **Smart Dimension** flyout in the **Sketch CommandManager**; the select cursor is replaced by the dimension cursor. Alternatively, right-click in the drawing area and choose the **Smart Dimension** option from the shortcut menu displayed to invoke the **Smart Dimension** tool. You can also use the Mouse Gesture to invoke this tool.

2. Move the cursor to the line 1 and click when the color of the line turns orange; a horizontal dimension is attached to the cursor.

3. Place it at a suitable location; the **Modify** dialog box is displayed. Enter **150** in this dialog box and press Enter.

4. Move the cursor to the arc 3 and click when the color of arc turns orange; a radial dimension is attached to the cursor.

5. Place it at a suitable location; the **Modify** dialog box is displayed. Enter **30** in this dialog box and press Enter.

6. Move the cursor to the circle 11 and click the color of line turns orange; a radial dimension is attached to the cursor.

Evaluation Copy. Do not reproduce. For information visit www.cadcim.com

7. Place it at a suitable location; the **Modify** dialog box is displayed. Enter **30** in this dialog box and press Enter.

8. Move the cursor to the line 1 and then the center of circle 11; a vertical dimension is attached to the cursor.

9. Place it at a suitable location; the **Modify** dialog box is displayed. Enter **40** in this dialog box and press Enter.

10. Move the cursor to the line 1 and then line 9; a vertical dimension is attached to the cursor.

11. Place it at a suitable location; the **Modify** dialog box is displayed. Enter **20** in this dialog box and press Enter.

12. Click on the line 1 and then line 7; a vertical dimension is attached to the cursor.

13. Place it at a suitable location; the **Modify** dialog box is displayed. Enter **15** in this dialog box and press Enter.

14. Click on the line 7; a horizontal dimension is attached to the cursor.

15. Place it at a suitable location; the **Modify** dialog box is displayed. Enter **25** in this dialog box and press Enter.

16. Click on the line 9; a horizontal dimension is attached to the cursor.

17. Place it at a suitable location; the **Modify** dialog box is displayed. Enter **35** in this dialog box and press Enter. You will notice that the sketch is fully defined, refer to Figure 2-77.

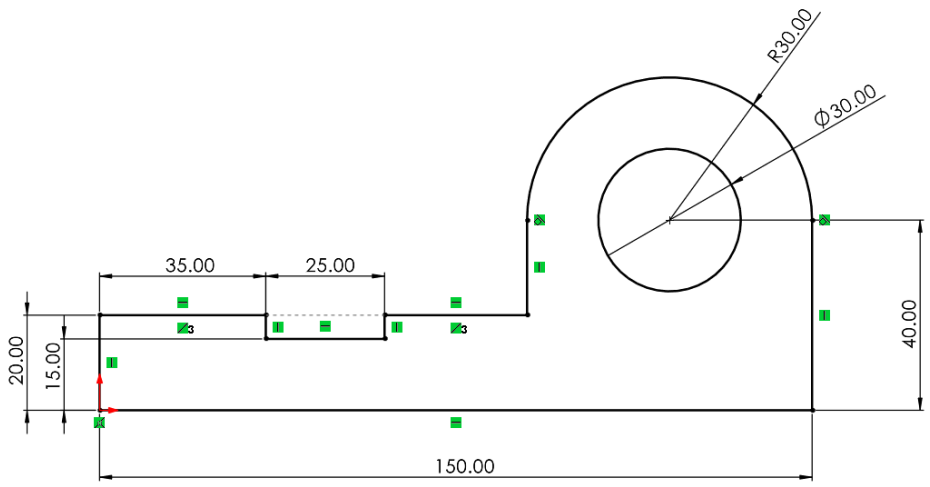

Figure 2-77 *Sketch after dimensioning*

Evaluation Copy. Do not reproduce. For information visit www.cadcim.com

Extruding the Sketch

Next, you need to invoke the **Extruded Boss/Base** tool and extrude the sketch using the parameters given in the tutorial description.

1. Choose the **Extruded Boss/Base** button from the **FeaturesCommandManager**; the sketch is automatically oriented to the trimetric view and the **Boss-Extrude PropertyManager** is displayed, as shown in Figure 2-78.



As you are converting the closed sketch into a feature, only the **Direction 1** rollout is displayed in the **Boss-Extrude PropertyManager**. Also, a preview of the feature is displayed in the temporary shaded graphics with the default values.

2. Make sure that the value in the **Depth** spinner is 30.

3. Choose the **OK** button to create the feature or choose **OK** from the confirmation corner.

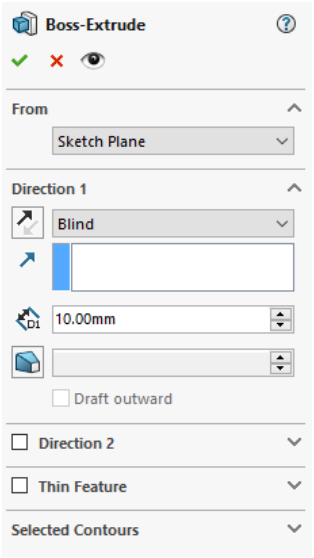

Figure 2-78** The **Boss-Extrude PropertyManager

It is recommended that you change the view to isometric after creating the feature so that you can view it properly.

4. Choose the **View Orientation** button from the **View (Heads-Up)** toolbar; a flyout is displayed. Choose the **Isometric** button from it. If the origin is displayed, turn off the display of the origin in the model by choosing **Hide/Show Items > View Origins** from the **View (Heads-Up)** toolbar. The isometric view of the resulting solid model is shown in Figure 2-79.

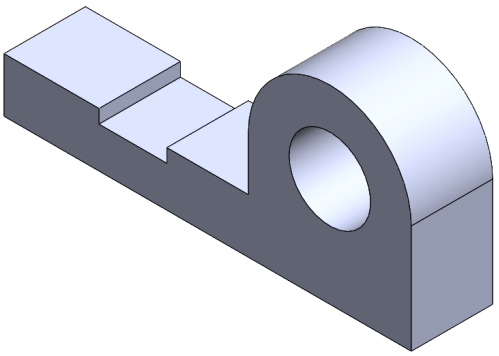

***Figure 2-79** Isometric view of the solid model*

Evaluation Copy. Do not reproduce. For information visit www.cadcim.com

Saving the Model

1. Choose the **Save** button from the Menu Bar to invoke the **Save As** dialog box.



2. Enter **c02_tut03** as the name of the document in the **File name** edit box. Choose **Save** and save the file at the location *\Documents\SOLIDWORKS\c02*.

Starting a New Drawing Document and Placing the Views on a Sheet

As mentioned in the tutorial description, you need to start a new drawing document, generate the views of the model and then place them on a drawing sheet. This is done by using the **Make Drawing from Part** tool.

1. Choose **File > Make Drawing from Part** from the SOLIDWORKS menus; the **Sheet Format/Size** dialog box is displayed.

2. Select **A1(ISO)** from the list box available below the **Standard sheet size** radio button and then choose the **OK** button; a new document is started with the set format and size and the **View Palette** task pane is displayed on the right in the drawing window.

3. Drag the **Isometric** view from the **View Palette** and place it at the top right corner of the drawing sheet, refer to Figure 2-80; the **View Palette** task pane is closed and the **Drawing View PropertyManager** is displayed.

4. Choose the **Close Dialog** button from the **Drawing View PropertyManager**.



Note

*The **Drawing View PropertyManager** will be displayed only if you drag and drop the Isometric view first instead of any plan or elevation views from the **View Palette** task pane.*

5. Click on the **View Palette** tab to invoke the **View Palette** task pane again. Next, drag and drop the **Front** view on the sheet, refer to Figure 2-80; the **Projected View PropertyManager** is displayed and you are prompted to select a location to place the new view.

6. Next, choose the **OK** button from the **Projected View PropertyManager**.

Evaluation Copy. Do not reproduce. For information visit www.cadcim.com

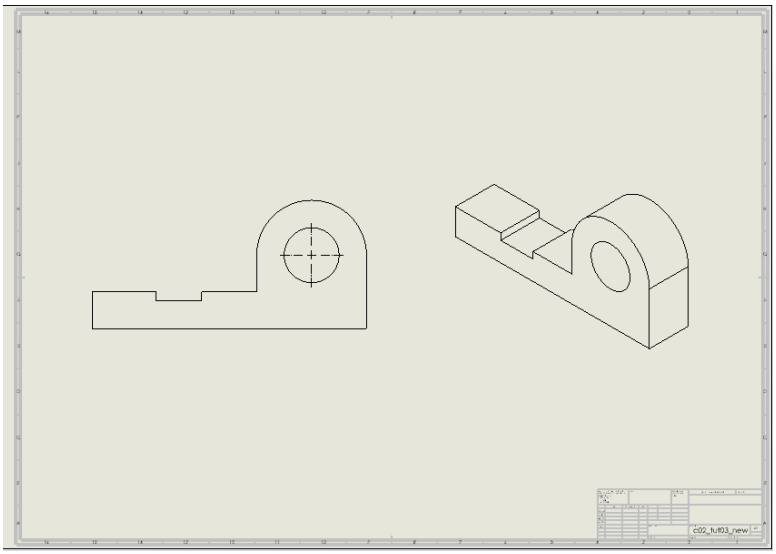

Figure 2-80 *Views placed on the drawing sheet*

Saving the Drawing

As the name of the document is specified in the beginning, you need to choose the **Save** button to save the document.

1. Choose the **Save** button from the Menu Bar and save the model at the location *\Documents\SOLIDWORKS\c02*.

2. Choose **File > Close** from the SOLIDWORKS menus to close the document.

Tutorial 4

In this tutorial, you will create the model shown in Figure 2-81. To create this model, you will first create the sketch of the base feature by using the sketching tools. Also, you will modify and edit the sketch using various modifying options. The dimensions required to create the base sketch for the model are shown in Figure 2-82. The extrusion depth of the model is 30 mm. After creating the model, you will create a new drawing document, generate the views of the model, and place them on a drawing sheet. **(Expected time: 30 min)**

Evaluation Copy. Do not reproduce. For information visit www.cadcim.com

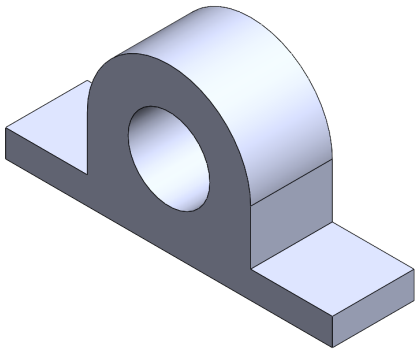

Figure 2-81 *Solid model for Tutorial 4*

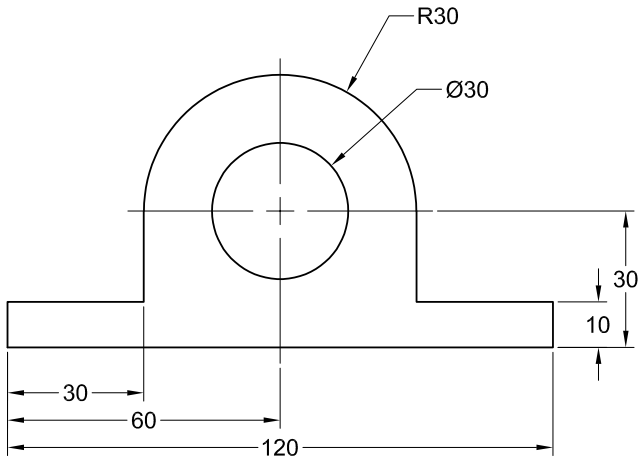

Figure 2-82 *Sketch of the model for Tutorial 4*

The following steps are required to complete this tutorial:

a. Start SOLIDWORKS and then start a new part document.
b. Invoke the sketching environment.
c. Draw the outer loop of the sketch.
d. Draw the sketch of the inner circle.
e. Add relations and dimensions to the sketch.
f. Extrude the sketch.
g. Save the model.
h. Generate the front and isometric views of the model.
i. Save and close the drawing file.

Starting a New File and Setting a Document Unit

1. Choose the **New** button from the Menu Bar; the **New SOLIDWORKS Document** dialog box is displayed. In this dialog box, the **Part** button is chosen by default.

2. Choose the **OK** button from the **New SOLIDWORKS Document** dialog box; a new SOLIDWORKS part document is started. To draw the sketch of the model, you need to invoke the sketching environment.

3. Choose the **Sketch** button from the **Sketch CommandManager**; the **Edit Sketch PropertyManager** is displayed.

4. Select **Front Plane** from the drawing area; the sketching environment is invoked.

5. Set the unit for measuring linear dimensions to millimeters and the unit for angular dimensions to degree. To do so, click on the **Unit system** option at the bottom right corner of the window; a flyout is displayed. Select the **Edit Document Units** option, the **Document**

Evaluation Copy. Do not reproduce. For information visit www.cadcim.com

Properties - Units dialog box is displayed. Select the **MMGS (millimeter, gram, second)** radio button from the dialog box if it is not selected and choose the **OK** button to close the dialog box.

Drawing the Outer Loop of the Sketch

The sketch of the model consists of an outer loop that has a circle inside it. You will first draw the outer loop and then the inner circle. The sketch will be drawn by using the **Line** and **Circle** tools.

The outer loop will be drawn using continuous lines and arcs. You will start drawing the sketch from the lower left corner of the sketch.

1. Choose the **Line** button from the **Sketch CommandManager** to invoke the **Line** tool; the arrow cursor is replaced by the line cursor. 

2. Move the cursor in the first quadrant close to the origin; the coordinates of the point are displayed close to the lower left corner of the screen.

3. Click where the coordinates are close to 10 mm, 10 mm, and 0 mm.

4. Move the line cursor horizontally toward the right and click when a value close to 120 is displayed above the line. Refer to Line 1 in Figure 2-83.

5. Move the line cursor vertically upward and click when a value close to 10 is displayed above the line. Refer to Line 2 in Figure 2-83.

6. Move the line cursor horizontally toward the left and click when a value close to 30 is displayed above the line. Refer to Line 3 in Figure 2-83.

7. Move the line cursor vertically upward and click when a value close to 20 is displayed above the line. Refer to Line 4 in Figure 2-83.

   The next entity to be drawn is a tangent arc. The tangent arc will be drawn by invoking the arc mode using the **Line** tool.

8. Move the line cursor away from the endpoint of the last line and then move it back to the endpoint; the arc mode is invoked and the line cursor is replaced by the arc cursor.

9. Move the arc cursor vertically upward slightly and then move it to the left when the dotted line is displayed.

   You will notice that a tangent arc is being drawn. The angle of the tangent arc and its radius are displayed above the arc cursor.

10. Click when the angle value above the arc cursor is displayed as 180 and the radius displays a value close to 30 to complete the arc.

Evaluation Copy. Do not reproduce. For information visit www.cadcim.com

The required tangent arc is drawn. As mentioned earlier, the line mode is automatically invoked after you have drawn the arc by using the **Line** tool.

11. Move the line cursor vertically downward and click when a value close to 20 is displayed above the line. Refer to Line 5 in Figure 2-83.

12. Move the line cursor horizontally toward the left and click when a value close to 30 is displayed above the line. Refer to Line 6 in Figure 2-83.

13. Move the line cursor vertically downward and click on the start point of Line 1; a Line 7 is created, refer to Figure 2-83.

    This completes the sketch of the outer loop. Since the display of the sketch is small, you need to modify the drawing display area such that the sketch fits the screen. The drawing display area is modified by using the **Zoom to Fit** tool.

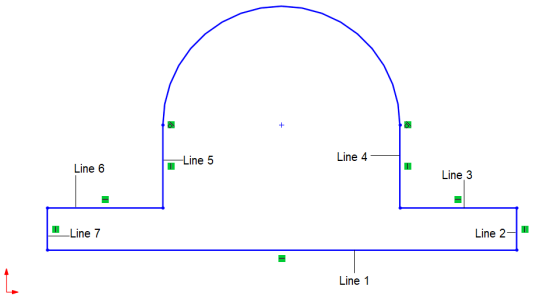

Figure 2-83 *Partial outer loop of the sketch*

14. Choose the **Zoom to Fit** tool from the **View (Heads-Up)** toolbar to fit the current sketch into the screen. The outer loop of the sketch is completed and is shown in Figure 2-84. Note that in this figure, the grid display and the **Shaded Sketch Contours** settings are turned off for better visibility.

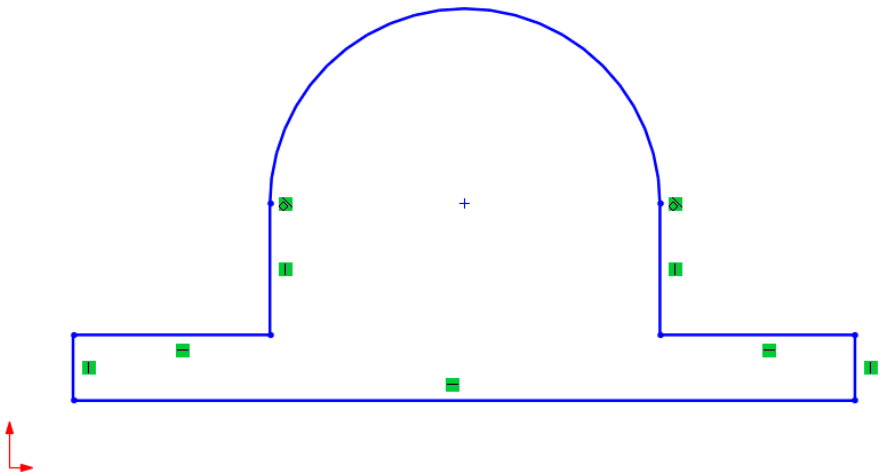

Figure 2-84 *Outer loop of the sketch*

Drawing Circle

In this section, you will invoke the **Circle** tool by using the Mouse Gesture to draw the inner circle.

Evaluation Copy. Do not reproduce. For information visit www.cadcim.com

1. Press and hold the right mouse button in the drawing area and drag the mouse; a set of tools is displayed. Move the cursor on the **Circle** tool; the **Circle PropertyManager** is displayed. Choose the **Circle** button from the **Circle Type** rollout if not already chosen.

   When you invoke the **Circle** tool, the arrow cursor is replaced by the circle cursor.

2. Move the circle cursor to the center of the outer arc; the center point is highlighted, refer to Figure 2-85.

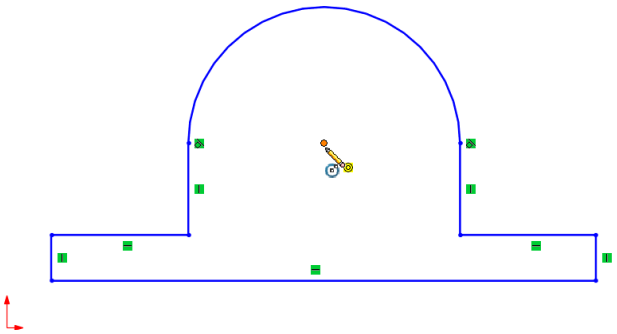

Figure 2-85 *Drawing a circle at the center of outer arc*

3. Click at the highlighted point. Next, move the circle cursor toward the left to define the circle.

4. Click when the radius of the circle displayed above the circle cursor displays a value close to 15; a circle is created.

5. The final sketch after drawing a circle inside the outer loop is shown in Figure 2-86.

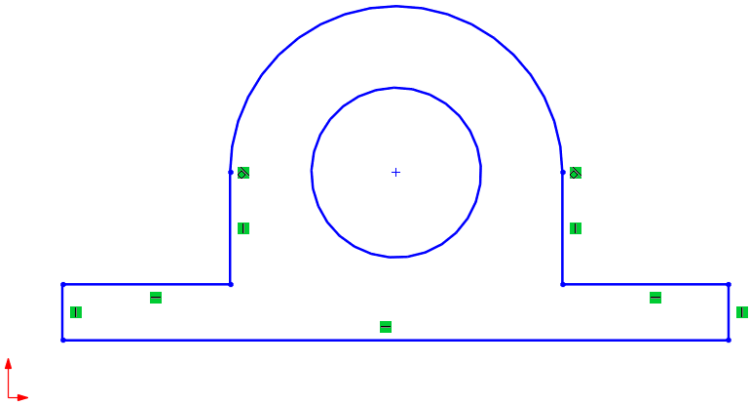

Figure 2-86 *Sketch after drawing the inner circle*

6. Right-click in the drawing area and then choose the **Select** option from the shortcut menu displayed to exit the **Circle** tool.

Evaluation Copy. Do not reproduce. For information visit www.cadcim.com

Adding Relations to the Sketch

After drawing the sketch, you need to add relations to it by using the **Add Relations PropertyManager**. Relations are applied to a sketch to constrain its degree of freedom, reduce the number of dimensions in the sketch, and capture the design intent of the sketch.

1. Choose the **Add Relation** button from the **Display/Delete Relations** flyout in the **Sketch CommandManager**; the **Add Relations PropertyManager** is displayed. Also, the confirmation corner is displayed at the upper right corner of the drawing area.

2. Select the line 3 and line 6. The names of the selected entities are displayed in the **Selected Entities** rollout of the **Add Relations PropertyManager**.

   The relations that can be applied to the selected entity are displayed in the **Add Relations** rollout of the **Add Relations PropertyManager**.

3. Choose the **Equal** button from the **Add Relations** rollout to apply the **Equal** relation to the selected entities.

4. Move the cursor to the drawing area and right-click to display the shortcut menu. Choose the **Clear Selections** option from the shortcut menu to remove the selected entities from the selection set. You will notice that a equal relationship is applied to the line.

5. Select the line 3 and line 6. The names of the selected entities are displayed in the **Selected Entities** rollout of the **Add Relations PropertyManager**.

6. The relations that can be applied to the selected entity are displayed in the **Add Relations** rollout of the **Add Relations PropertyManager**.

7. Choose the **Collinear** button from the **Add Relations** rollout to apply the **Collinear** relation to the selected entities, refer to Figure 2-87.

8. Choose the **OK** button from the **Add Relations PropertyManager** or choose **OK** from the confirmation corner to close the PropertyManager. Click anywhere in the drawing area to clear the selected entities.

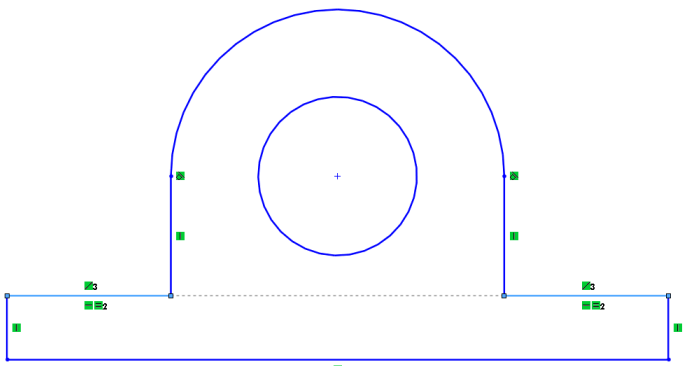

Figure 2-87 *Sketch after relationship*

Evaluation Copy. Do not reproduce. For information visit www.cadcim.com

Applying Dimensions to the Sketch

Next, you will apply dimensions to the sketch and fully define it. As mentioned earlier, the sketched entities are shown in blue indicating that the sketch is underdefined. After the required dimensions are applied, the sketched entities will turn black indicating that the sketch is fully defined now.

1. Choose the **Smart Dimension** tool from the **Smart Dimension** flyout in the **Sketch CommandManager**; the select cursor is replaced by the dimension cursor. Alternatively, right-click in the drawing area and choose the **Smart Dimension** option from the shortcut menu displayed to invoke the **Smart Dimension** tool. You can also use the Mouse Gesture to invoke this tool.

2. Move the cursor to the line 1 and click when its color turns orange; a horizontal dimension is attached to the cursor.

3. Place it at a suitable location; the **Modify** dialog box is displayed. Enter **120** in this dialog box and press Enter.

4. Move the cursor to the line 2 and click when its color turns orange; a vertical dimension is attached to the cursor.

5. Place it at a suitable location; the **Modify** dialog box is displayed. Enter **10** in this dialog box and press Enter.

6. Move the cursor to the arc and click when its color turns orange; a radial dimension is attached to the cursor.

7. Place it at a suitable location; the **Modify** dialog box is displayed. Enter **30** in this dialog box and press Enter.

8. Move the cursor to the circle and then click on it; a radial dimension is attached to the cursor.

9. Place it at a suitable location; the **Modify** dialog box is displayed. Enter **30** in this dialog box and press Enter.

10. Click the cursor to the origin and then start point of line 1. Move the cursor vertically; a vertical dimension is attached to the cursor.

11. Place it at a suitable location; the **Modify** dialog box is displayed. Enter **10** in this dialog box and press Enter.

12. Click the cursor to the origin and then start point of line 1. Move the cursor horizontally; a horizontal dimension is attached to the cursor.

13. Place it at a suitable location; the **Modify** dialog box is displayed. Enter **10** in this dialog box and press Enter.

Evaluation Copy. Do not reproduce. For information visit www.cadcim.com

14. Click the cursor to the line 1 and then to the center of the circle. Move the cursor vertically; a vertical dimension is attached to the cursor.

15. Place it at a suitable location; the **Modify** dialog box is displayed. Enter **30** in this dialog box and press Enter.

You will notice that the sketch is fully defined, refer to Figure 2-88.

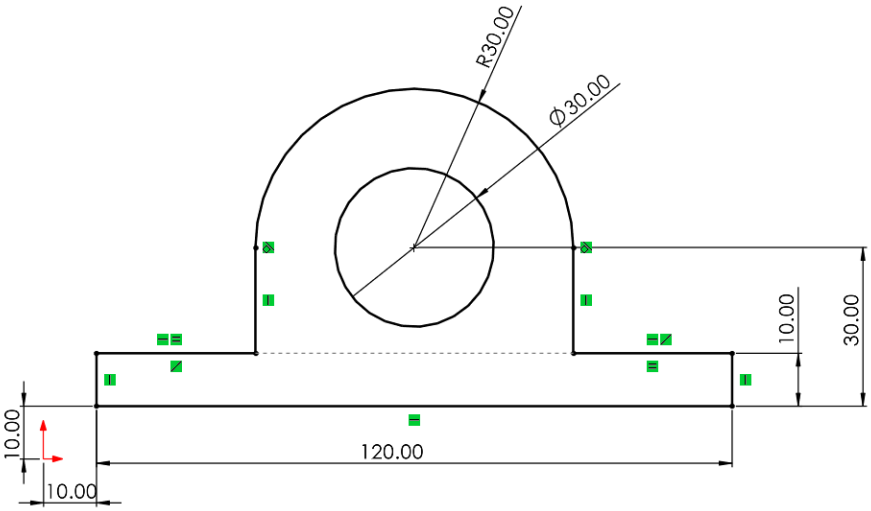

Figure 2-88 *Sketch after dimensioning*

Extruding the Sketch

Next, you need to invoke the **Extruded Boss/Base** tool and extrude the sketch using the parameters given in the tutorial description.

1. Choose the **Extruded Boss/Base** button from the **FeaturesCommandManager**; the sketch is automatically oriented to the trimetric view and the **Boss-Extrude PropertyManager** is displayed.



As you are converting the closed sketch into a feature, only the **Direction 1** rollout is displayed in the **Boss-Extrude PropertyManager**. Also, a preview of the feature is displayed in the temporary shaded graphics with the default values.

2. Make sure that the value in the **Depth** spinner is 30.

3. Choose the **OK** button to create the feature or choose **OK** from the confirmation corner.

It is recommended that you change the view to isometric after creating the feature so that you can view it properly.

4. Choose the **View Orientation** button from the **View (Heads-Up)** toolbar; a flyout is displayed. Choose the **Isometric** button from it. If the origin is displayed, turn off the display of

Evaluation Copy. Do not reproduce. For information visit www.cadcim.com

the origin in the model by choosing **Hide/Show Items > View Origins** from the **View (Heads-Up)** toolbar. The isometric view of the resulting solid model is shown in Figure 2-89.

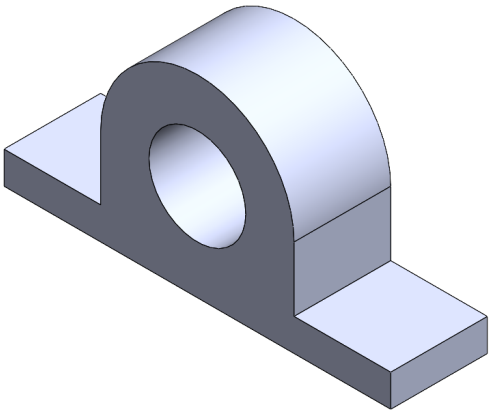

Figure 2-89 *Isometric view of the solid model*

Saving the Model

1. Choose the **Save** button from the Menu Bar to invoke the **Save As** dialog box.



2. Enter **c02_tut04** as the name of the document in the **File name** edit box. Choose the **Save** button and then save the file at the location *\Documents\SOLIDWORKS\c02*.

Starting a New Drawing Document and Placing the Views on a Sheet

As mentioned in the tutorial description, you need to start a new drawing document, generate the views of the model and then place them on a drawing sheet. This is done by using the **Make Drawing from Part** tool.

1. Choose **File > Make Drawing from Part** from the SOLIDWORKS menus; the **Sheet Format/Size** dialog box is displayed.

2. Select **A2(ISO)** from the list box available below the **Standard sheet size** radio button and then choose the **OK** button; a new document is started with the set format and size and the **View Palette** task pane is displayed on the right in the drawing window.

3. Drag the Isometric view from the **View Palette** and place it at the top right corner of the drawing sheet, refer to Figure 2-90; the **View Palette** task pane is closed and the **Drawing View PropertyManager** is displayed.

4. Choose the **Close Dialog** button from the **Drawing View PropertyManager**.



Note

*The **Drawing View PropertyManager** will be displayed only if you drag and drop the Isometric view first instead of any plan or elevation views from the **View Palette** task pane.*

Evaluation Copy. Do not reproduce. For information visit www.cadcim.com

5. Click on the **View Palette** tab to invoke the **View Palette** task pane again. Next, drag and drop the **Front** view on the sheet, refer to Figure 2-90; the **Projected View PropertyManager** is displayed and you are prompted to select a location to place the new view.

6. Next, choose the **OK** button from the **Projected View PropertyManager**.

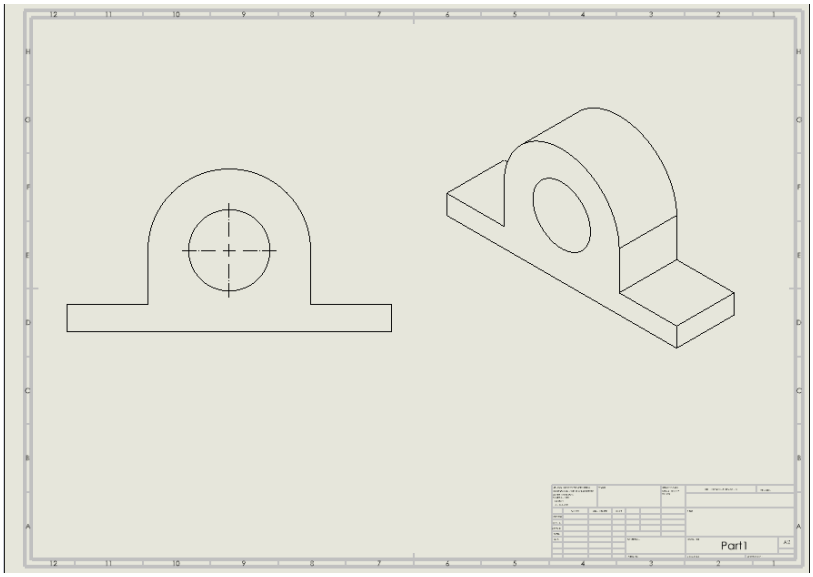

Figure 2-90 *Views placed on the drawing sheet*

Saving the Drawing

1. Choose the **Save** button from the Menu Bar to invoke the **Save As** dialog box.



2. Enter **c02_tut04** as the name of the document in the **File name** edit box and choose the **Save** button; the document is saved at the location *\Documents\SOLIDWORKS\c02*.

3. Close the document by choosing **File > Close** from the SOLIDWORKS menus.

Self-Evaluation Test

Answer the following questions and then compare them to those given at the end of this chapter:

1. You can convert a sketched entity into a construction entity by selecting the _____ check box provided in the PropertyManager.

2. To draw a rectangle at an angle, you need to use the _____ tool.

3. _____ are temporary lines that are used to track a particular point on the screen.

4. You can invoke the _____ tool or press the Esc key to exit the currently active sketching tool.

Evaluation Copy. Do not reproduce. For information visit www.cadcim.com

5. When you select a tangent entity to draw a tangent arc, the _____ relation is applied between the start point of the arc and the tangent entity.

6. In SOLIDWORKS, a rectangle is considered as a combination of individual _____.

7. The base feature of any design is a sketched feature and is created by drawing a sketch. (T/F)

8. You can invoke the arc mode using the **Line** tool. (T/F)

9. By default, the cursor jumps through a distance of 5 mm when the grid snap is on. (T/F)

10. If you save a file in the sketching environment and then open it the next time, it will open in the part modeling environment. (T/F)

Review Questions

Answer the following questions:

1. In SOLIDWORKS, a polygon is considered as a combination of which of the following entities?

(a) Lines (b) Arcs
(c) Splines (d) None of these

2. Which of the following options is not displayed in the **New SOLIDWORKS Document** dialog box?

(a) **Part** (b) **Assembly**
(c) **Drawing** (d) **Sketch**

3. Which of the following entities is not considered while converting a sketch into a feature?

(a) Sketched circles (b) Sketched lines
(c) Construction lines (d) None of these

4. Which of the following PropertyManagers is displayed when you select a line of a rectangle?

(a) **Line Properties PropertyManager** (b) **Line/Rectangle PropertyManager**
(c) **Rectangle PropertyManager** (d) None of these

5. Which of the following PropertyManagers is displayed while drawing an elliptical arc?

(a) **Arc PropertyManager** (b) **Ellipse PropertyManager**
(c) **Elliptical Arc PropertyManager** (d) None of these

6. A three point arc is drawn by defining the start point, the endpoint, and a point on the arc. (T/F)

Evaluation Copy. Do not reproduce. For information visit www.cadcim.com

7. You can delete the sketched entities by right-clicking on them and then choosing the **Delete** option from the shortcut menu. (T/F)

8. The origin is a blue icon that is displayed in the middle of the sketcher screen. (T/F)

9. In SOLIDWORKS, circles are drawn by specifying the centerpoint of the circle and then entering the radius of the circle in the dialog box displayed. (T/F)

10. When you open a new SOLIDWORKS document, it is not maximized in the SOLIDWORKS window. (T/F)

EXERCISES

Exercise 1

Create the sketch shown in Figure 2-91. Next convert this sketch into an extruded model by extruding it to 30 mm, refer to Figure 2-92. Next, you will create a new drawing document, generate the front and isometric views of the model, and place them on a drawing sheet.

(Expected time: 30 min)

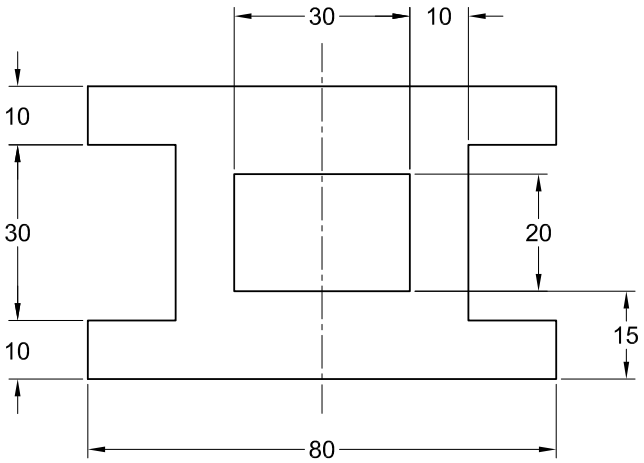

Figure 2-91 *Sketch for Exercise 1*

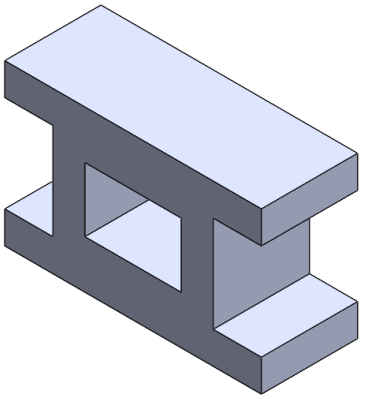

Figure 2-92 *Solid model for Exercise 1*

Evaluation Copy. Do not reproduce. For information visit www.cadcim.com

Exercise 2

Create the sketch shown in Figure 2-93. Next convert this sketch into an extruded model by extruding it to 30 mm, refer to Figure 2-94. Next, you will create a new drawing document, generate the front and isometric views of the model, and place them on a drawing sheet.

(Expected time: 30 min)

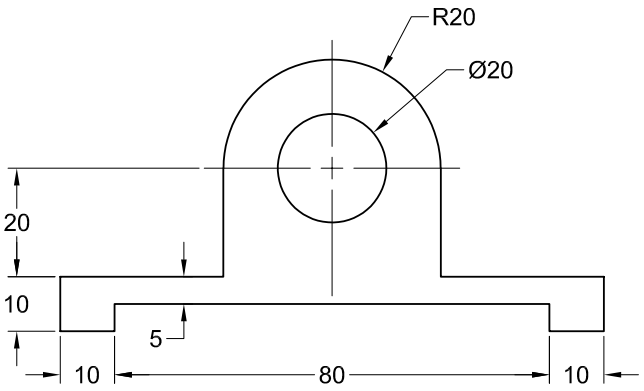

Figure 2-93 *Sketch for Exercise 2*

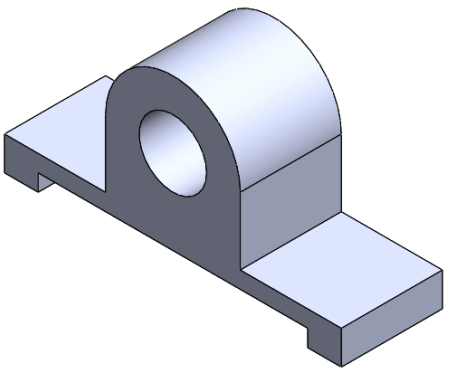

Figure 2-94 *Solid model for Exercise 2*

Exercise 3

Create the sketch shown in Figure 2-95. Next convert this sketch into an extruded model by extruding it to 30 mm, refer to Figure 2-96. Next, you will create a new drawing document, generate the front and isometric views of the model, and place them on a drawing sheet.

(Expected time: 30 min)

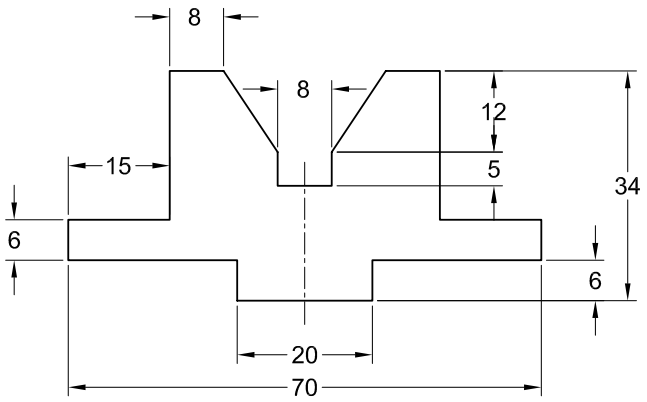

Figure 2-95 *Sketch for Exercise 3*

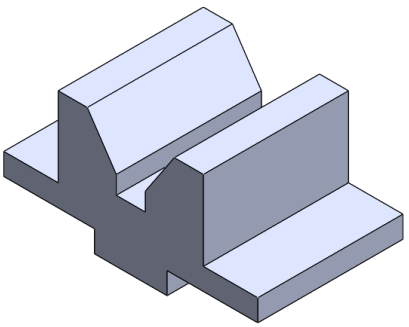

Figure 2-96 *Solid model for Exercise 3*

Evaluation Copy. Do not reproduce. For information visit www.cadcim.com

Exercise 4

Create the sketch shown in Figure 2-97. Next convert this sketch into an extruded model by extruding it to 30 mm, refer to Figure 2-98. Next, you will create a new drawing document, generate the front and isometric views of the model, and place them on a drawing sheet.

(Expected time: 30 min)

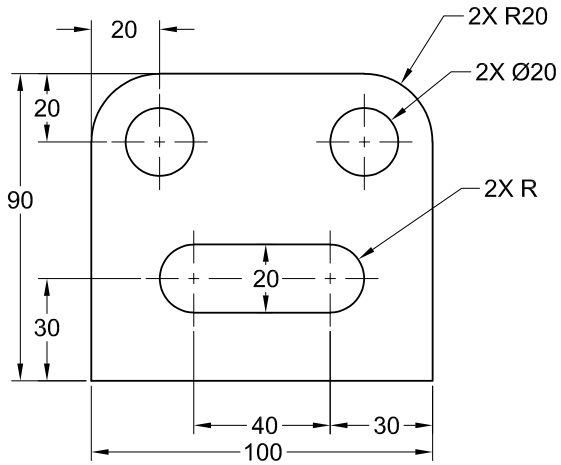

Figure 2-97 *Sketch for Exercise 4*

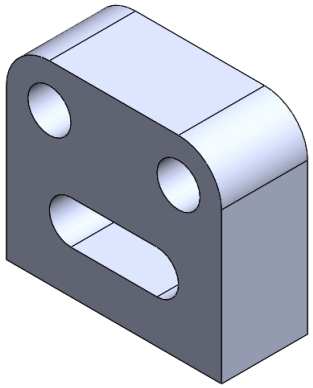

Figure 2-98 *Solid model for Exercise 4*

Evaluation Copy. Do not reproduce. For information visit www.cadcim.com

Answers to Self-Evaluation Test

1. For construction, **2. 3 Point Corner Rectangle**, **3.** Inferencing lines, **4. Select**, **5.** Tangent, **6.** lines, **7.** T, **8.** T, **9.** F, **10.** F

Evaluation Copy. Do not reproduce. For information visit www.cadcim.com