SOLIDWORKS Certification Exam

In the current challenging world, the competition in CAD industry has been increasing day by day. Companies today want to hire proficient designers so that they are productive from the day one. Therefore, many of the software developer companies have introduced certification programs to assess the technical knowledge of the designers and then certify them. As one of the most widely used MCAD packages in the industry, SOLIDWORKS is an excellent example of how certification can help you to standout in the crowd of engineers. SOLIDWORKS has so far issued 4,16,922 certifications and the figure is expected to become bigger in the future, indicating the importance of certification at student and industrial level.

Types of Certification

In SOLIDWORKS, the certification is provided in three major categories. These categories are:
1) Associate Level
2) Professional Level
3) Expert Level

The following certifications are also provided in SOLIDWORKS:
CSWPA-Drawing Tools
CSWPA-Mold Making
CSWPA-Sheet Metal
CSWPA-Surfacing
CSWPA-Weldments
And many more.

Certified SOLIDWORKS Associate (CSWA) – Mechanical Design

This certification is for the users having basic level of understanding of the software. The exam length is 3 hours and minimum passing grade is 70%. There is a 14 day waiting period between every attempt of CSWA exam.

All candidates get electronic certificates and personal listing on the CSWA directory when they pass the exam.

Certified SOLIDWORKS Professional (CSWP) - Mechanical Design

This certification is intended for advanced level users. The exam length is 3 hours 20 minutes. There is a 14 day waiting period between every attempt of CSWA exam.

All candidates get electronic certificates and personal listing on the CSWP directory when they pass the exam.

There are three segments in this exam, which are as follows:
Segment 1: This segment has 70 minutes duration and 70 points are required to pass this segment.

Segment 2: This segment has 50 minutes duration and 77 points are required to pass this segment.

Segment 3: This segment has 80 minutes duration and 77 points are required to pass this segment.



Note
The range of tools covered in this exam is more than CSWP exam.

Certified SOLIDWORKS Expert (CSWE) - Mechanical Design

This certification is an expert level exam. The exam length is 4 hour and minimum passing grade is 80%. There is a 90 day waiting period between every attempt of CSWE exam.

All candidates get electronic certificates, business card logo and personal listing on the CSWE directory when they pass the exam.

This exam has some prerequisites, which are as follows:
(a) Successfully passed the CSWP exam.
(b) Successfully passed at least four of the CSWP advanced topic exams (Sheet Metal, Weldments, Surfacing, Mold Tools, and Drawing Tools).

TUTORIALS

To perform the tutorials, you need to download the zipped file named as *c19_SW_input* from the **Input Files** section of the CADCIM website. The complete path for downloading the file is:

Textbooks > CAD/CAM > SOLIDWORKS > SOLIDWORKS 2023 for Designers > Input Files

Tutorial 1

In this tutorial, download the file and open it in SOLIDWORKS, as shown in Figure 1. Next, you need to change the value of A and B parameters in the sketch, refer to Figure 2. Next, move the hole in the part 30 mm in X-direction, as shown in Figure 3.

Details of the part are given next:
Material: Brass
Density: 8500 kg / m^3
Part Units: MM
Decimal Places: 2

Origin: Default
A = R10
B = Dia. 18

What is the Center of mass of the part?

Enter Coordinates:
X: ----------
Y: ----------
Z: ----------

(Expected time: 10 min)

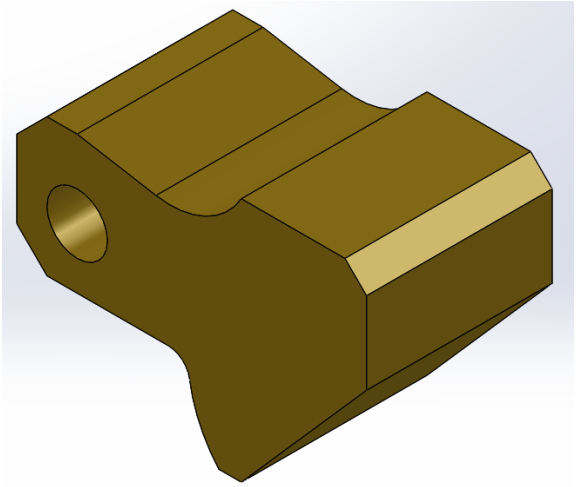

Figure 1 *The isometric view of the model*

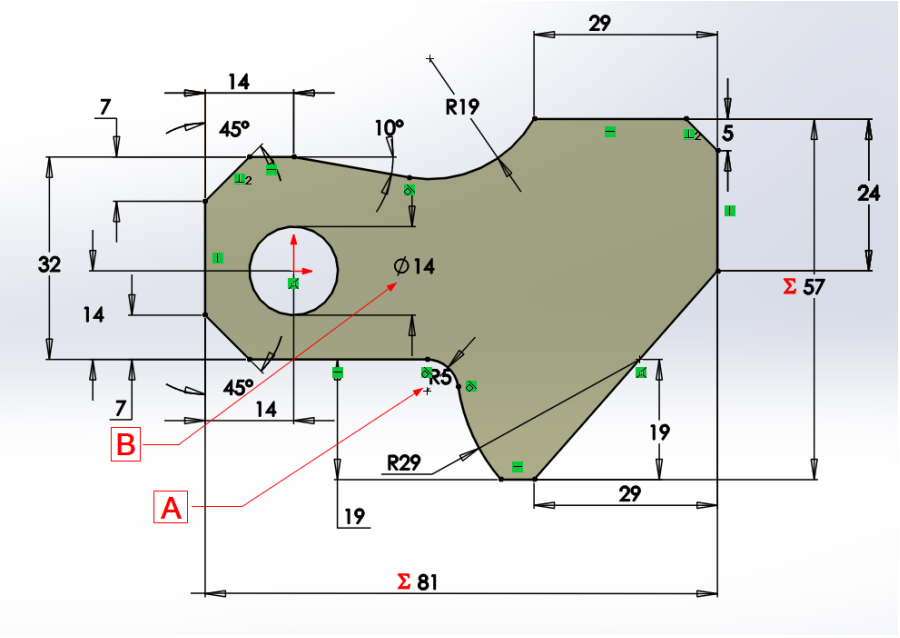

Figure 2 *The A and B parameters in the sketch of the model*

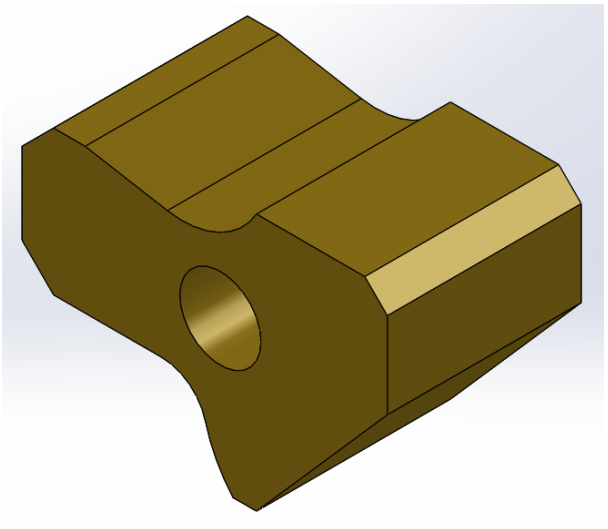

Figure 3 *The model after changing parameters and hole position*

The following steps are required to complete this tutorial:

a. Start **SOLIDWORKS 2023** and open the model.
b. Edit A and B parameters in the sketch.
c. Move the hole using the **Move Face** tool in the **Direct Editing CommandManager**.
d. Set the precision to measure the parameters upto 2 decimal places.
e. Measure the Center of Mass of the model using the **Mass Properties** tool in the **Evaluate CommandManager**.
f. Save the file using the **SAVE AS** tool and then close the document.

Starting SOLIDWORKS 2023 and Opening the Model

First, you need to start SOLIDWORKS and open a model.

1. Start SOLIDWORKS 2023.

2. Choose the **Open** button from the Menu Bar to display the **Open** dialog box.

3. Browse to the downloaded folder and extract the *CSW_tut_01.zip* file.

4. Select the *CSW_tut_01.SLDPRT* file from the *CSW_tut_01* folder and then choose the **Open** button. The model gets opened in the part environment, as shown in Figure 4.

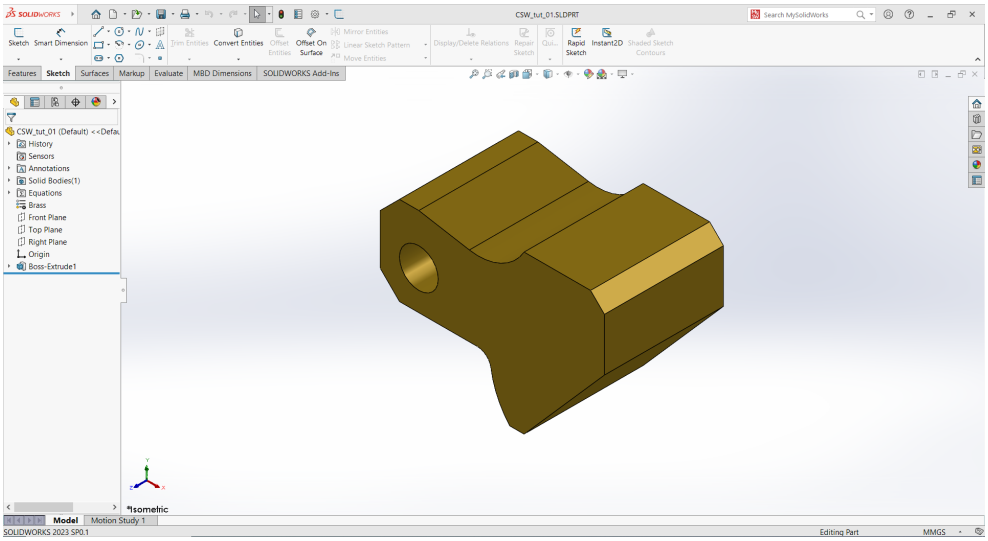

Figure 4 *The model in the part environment*

Editing the Sketch

In this section, you will change the value of A and B parameters provided in the question.

1. Select **Boss-Extrude1** from the **FeatureManager Design Tree**; a pop-up toolbar is displayed.

2. Choose **Edit Sketch** from the pop-up toolbar; the sketching environment is displayed. Change A and B parameters as provided in the question. Exit the sketching environment. The modified model is shown in Figure 5.

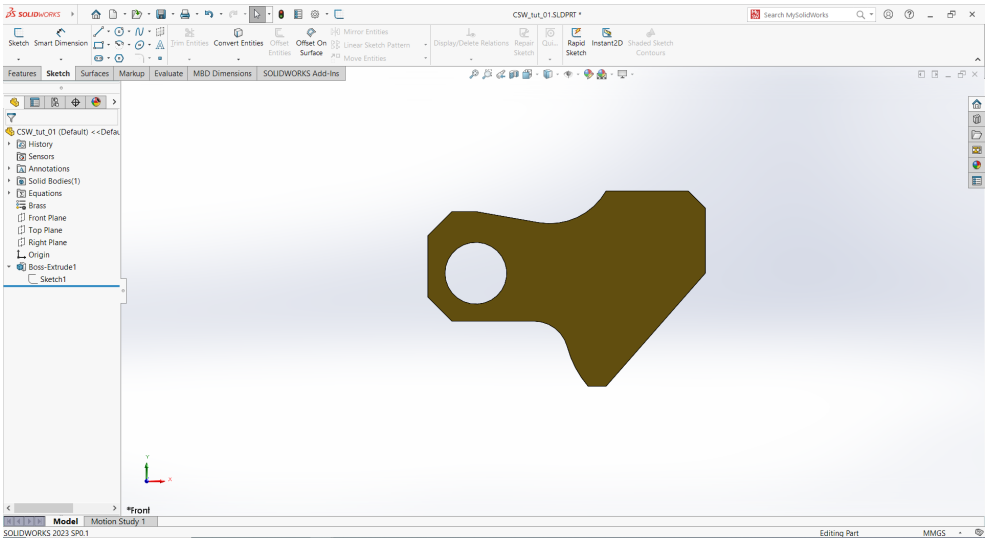

Figure 5 *The modified model*

Moving the Hole

In this section, you will move the hole 30 mm in X direction.

1. Choose the **Move Face** tool from the **Direct Editing CommandManager**; the **Move Face PropertyManager** is displayed.

2. Select the face of the hole, refer to Figure 6. Also, ensure the **Translate** radio button is selected in the **Move Face** rollout.

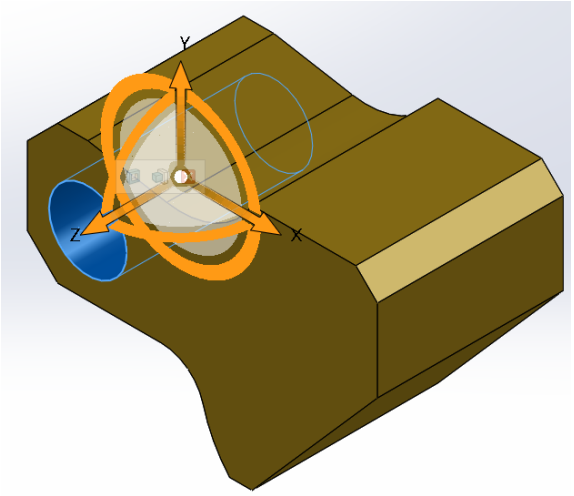

Figure 6 *The face selected in model*

3. Select the X direction arrowhead and specify **30 mm** in the **Delta X** edit box.

4. Choose the **OK** button to close the **Move Face PropertyManager**.

Measuring the Center of Mass

In this section, you need to measure the center of mass of the model.

Before measuring the center of mass of the model, ensure that 2 decimal places precision is selected.

1. Select the **Edit Document Units** option from the **Unit system** in the status bar; the **Document Properties - Units** dialog box gets displayed.

2. Click the **Units** option in the dialog box and ensure that the **MMGS** radio button is selected in the **Unit system** area. Next, select **.12** from the **Length** row in the **Basic Units** area and also select **.12** from the **Length** row in the **Mass/Section Properties** area.

3. Choose **OK** button to close the dialog box.

4. Select the **Mass Properties** tool from the **Evaluate CommandManager**; the **Mass Properties** dialog box with the center of mass value is displayed, refer to Figure 7.

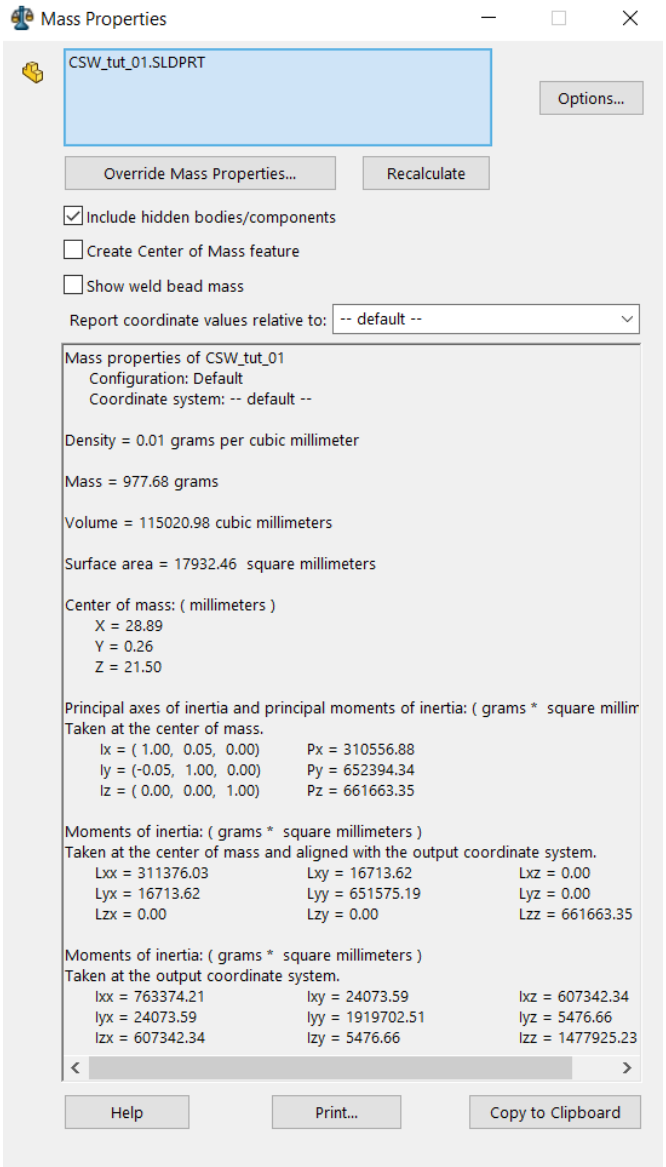

***Figure 7** The **Mass Properties** dialog box*

Center of mass of the model
x = **28.89**, y = **0.26**, and z = **21.50**

Saving the Model

Next, you need to save the file.

1. Choose the **Save As** button to save the file; the **Save As** dialog box is displayed. Specify the path to save the file and then choose the **Save** button.

Tutorial 2

In this tutorial, you need to download the file and open *CSW_tut_02.SLDASM* in SOLIDWORKS, as shown in Figure 8. Now, you need to assemble the components, refer to Figures 9 to 11.

Details of the part are given next:
Material: Titanium
Density: 4600 kg / m^3
Part Units: MM
Decimal Places: 2

Origin: Default

What is the Center of mass of the part?
Enter Coordinates:
X: ----------
Y: ----------
Z: ----------

(Expected time: 10 min)

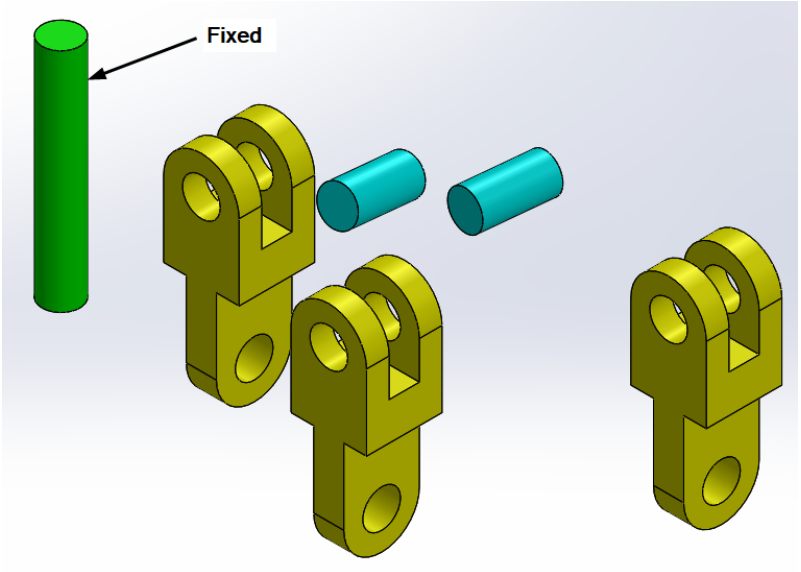

Figure 8 *The parts needed to assemble*

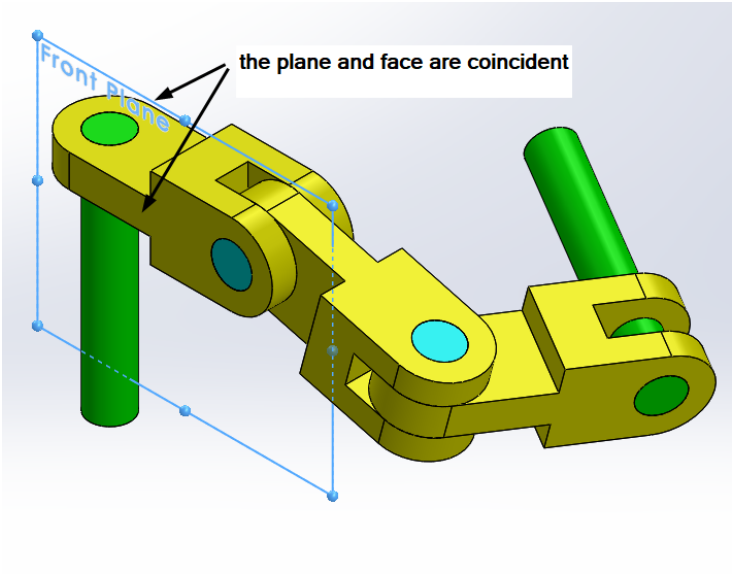

Figure 9 *The final assembly of parts*

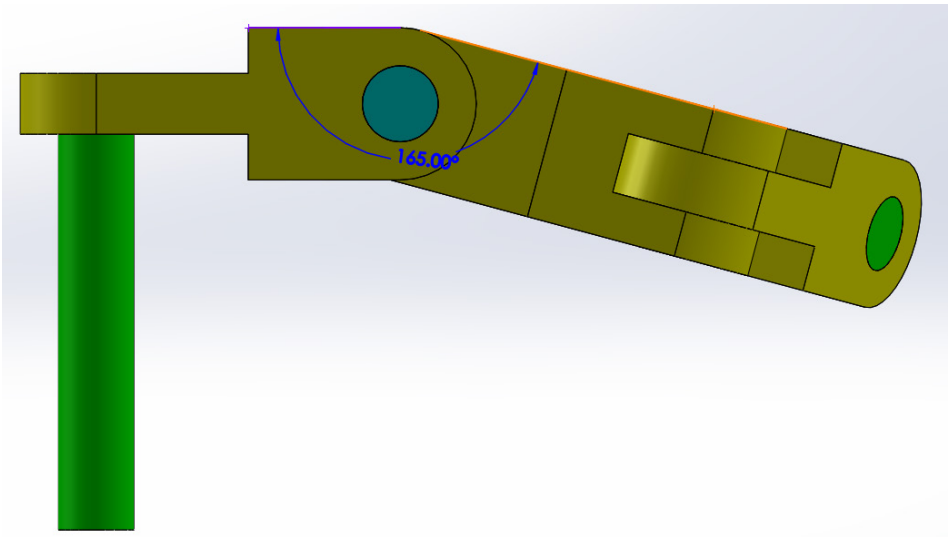

Figure 10 *The arrangement of parts*

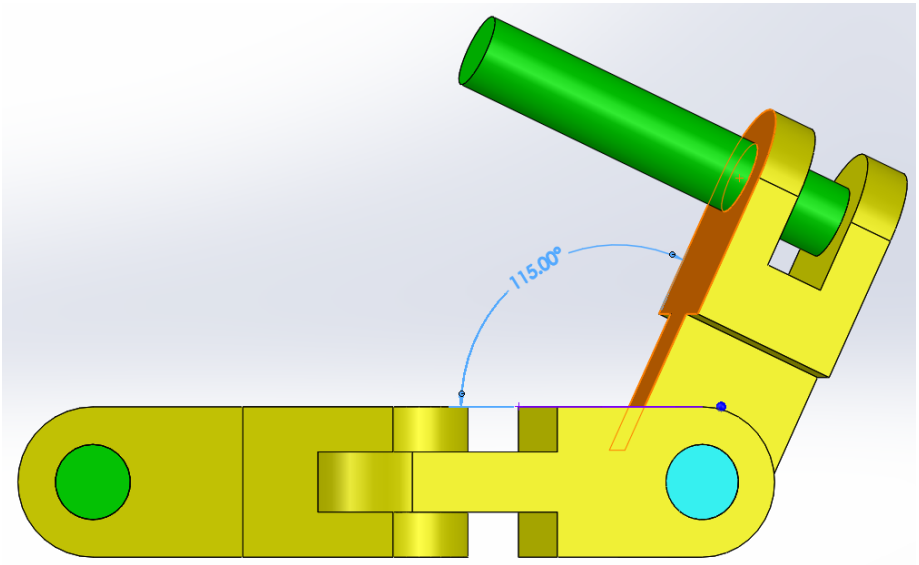

Figure 11 *The arrangement of parts*

The following steps are required to complete this tutorial:

a. Start **SOLIDWORKS 2023** and open the assembly file.
b. Apply the Mate constraint between the parts.
c. Copy the part and apply constraints between parts.
d. Measure the Center of Mass of the assembly by using the **Mass Properties** tool in the **Evaluate CommandManager**.
e. Save the file using the **SAVE AS** tool and then close the document.

Starting SOLIDWORKS 2023 and Opening the Model

First, you need to start SOLIDWORKS and open the model.

1. Double-click on the **SOLIDWORKS 2023** shortcut icon on the desktop of your computer to start SOLIDWORKS.

2. Choose the **Open** button from the Menu Bar to display the **Open** dialog box.

3. Browse to the downloaded folder and extract the *CSW_tut_02.zip* file.

4. Select the *CSW_tut_02.SLDPRT* file from the *CSW_tut_02* folder and then choose the **Open** button. The model gets opened in the assembly environment, as shown in Figure 12.

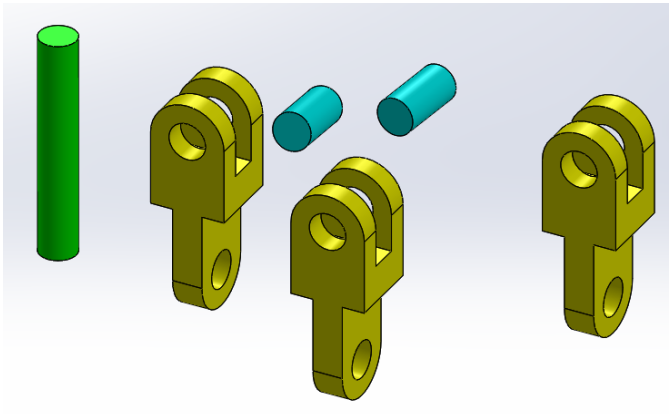

Figure 12 *The arrangement of parts in assembly environment*

Applying Constraints

In this section, you will apply constraints between the parts.

1. Choose the **Mate** tool from the **Assembly CommandManager**; the **Mate PropertyManager** gets displayed.

2. Now apply the Concentric and Coincident constraints between the parts. The arrangement of parts after applying the constraints is shown in Figure 13.

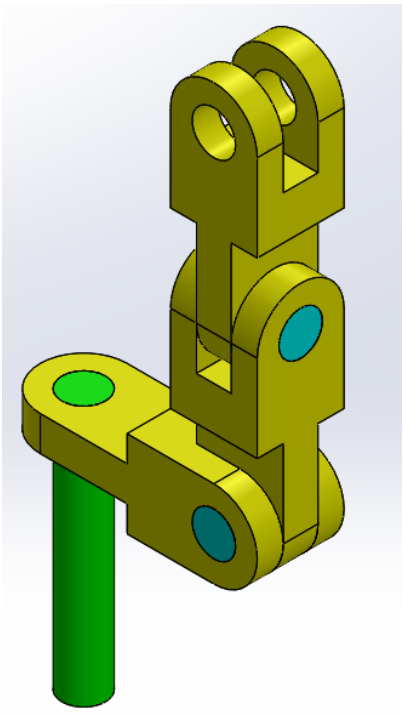

Figure 13 *The arrangement of parts after applying constraints*

3. Now, apply the angle constraint between parts, refer to Figures 10 and 11 for angle dimension.

4. Now apply the Concentric and Coincident constraints between parts. The arrangement of parts after applying the constraints is shown in Figure 14.

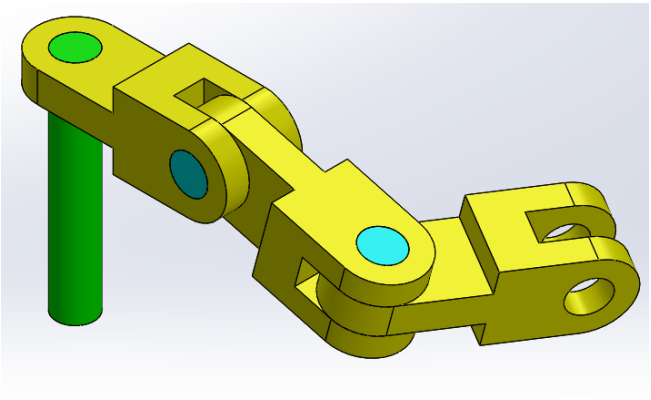

Figure 14 *The arrangement of parts after applying constraints*

Copying the Parts and Applying Constraints

In this section, you will copy the parts.

1. Hold the CTRL key and drag the part to be copied, refer to Figure 15.

2. Now apply the Coincident and Concentric constraints between the parts by using the **Mate** tool, refer to Figure 9.

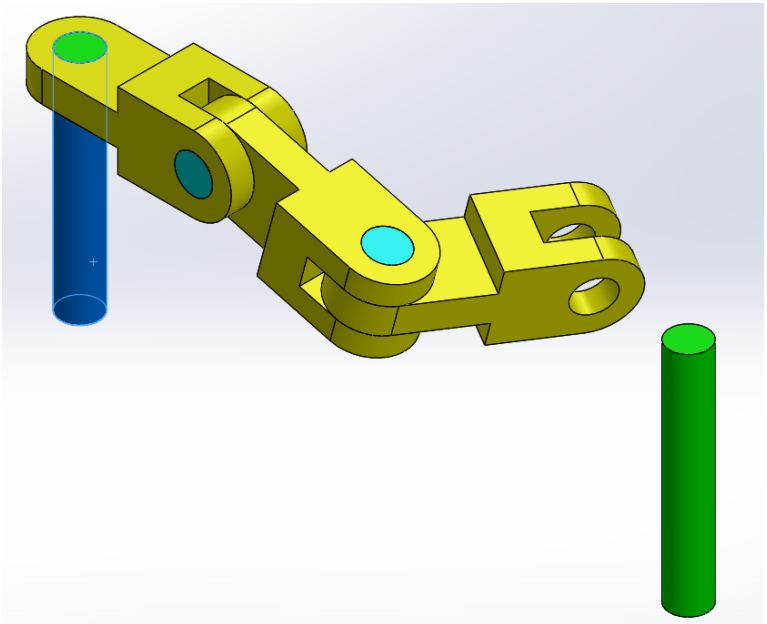

Figure 15 *The part to be copied*

Measuring the Center of Mass

In this section, you will measure the center of mass of the model.

Before measuring the center of mass of the model, ensure that 2 decimal places precision is selected.

1. Select the **Edit Document Units** option from the **Unit System** in the status bar; the **Document Properties - Units** dialog box gets displayed.

2. Click the **Units** option in the dialog box and ensure that the **MMGS** radio button is selected in the **Unit system** area. Next, select **.12** from the **Length** row in the **Basic Units** area and also select **.12** from the **Length** row in the **Mass/Section Properties** area.

3. Choose the **OK** button to close the dialog box.

4. Select the **Mass Properties** tool from the **Evaluate CommandManager**; the **Mass Properties** dialog box is displayed with the center of mass value in this dialog box, refer to Figure 16.

Center of mass of the model
x = **269.68**, y = **-62.98**, and z = **-48.07**

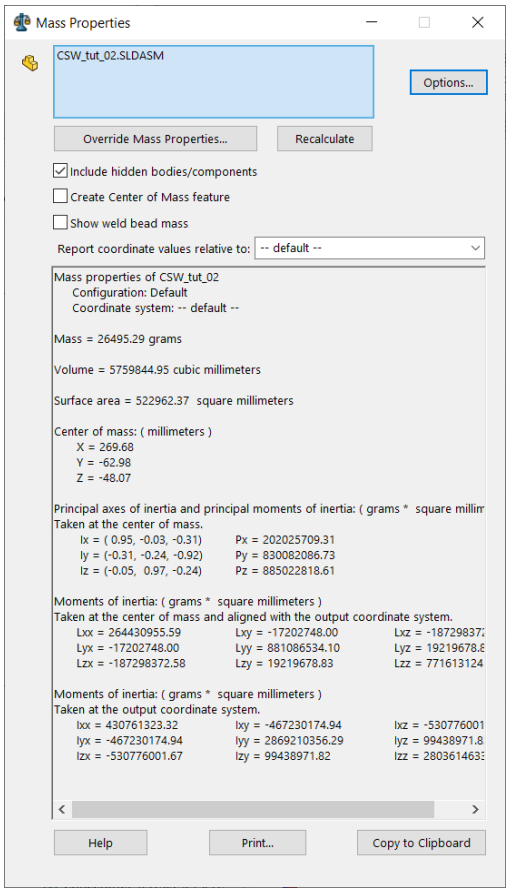

Figure 16 *The* ***Mass Properties*** *dialog box*

Saving the Model

Next, you need to save the file.

1. Choose the **Save As** button to save the file; the **Save As** dialog box is displayed. Specify the path to save the file and then choose the **Save** button.

Tutorial 3

In this tutorial, you need to download the file and open *CSW_tut_03.SLDPRT* in SOLIDWORKS, as shown in Figure 17. Next, apply fillets to the model, refer to Figure 18. Figure 19 shows the detailed D view of the model.

Details of the model are given next:
Material: 6061 alloy
Density: 2700 kg / m^3
Part Units: MM
Decimal Places: 2
Origin: Default
A = 2
B = 0.5
C = 6.5
What is the mass of the model?

(Expected time: 15 min)

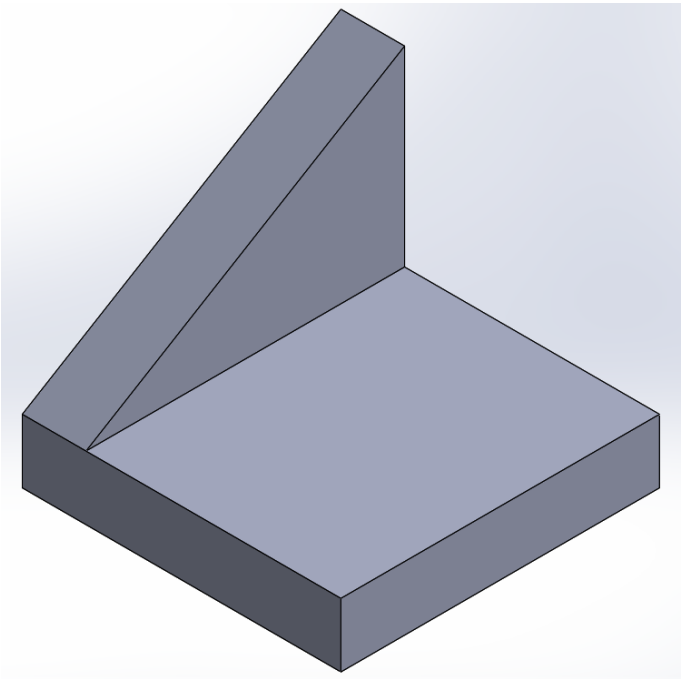

Figure 17 *The Isometric view of the Model*

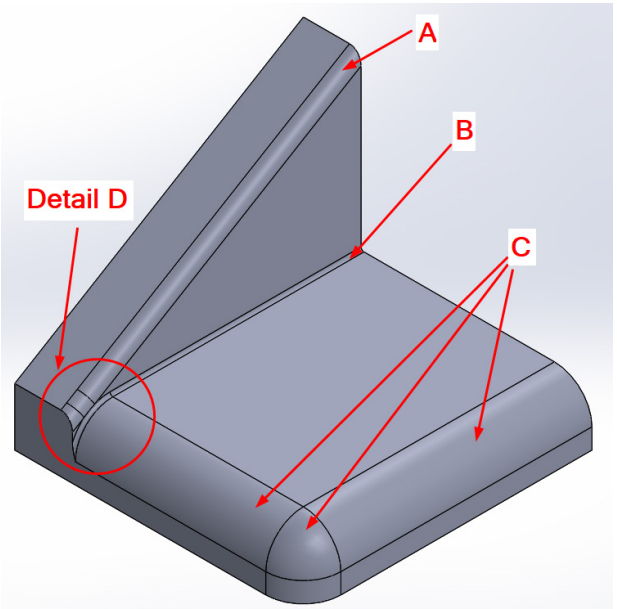

Figure 18 *The A, B and C Parameters in the model*

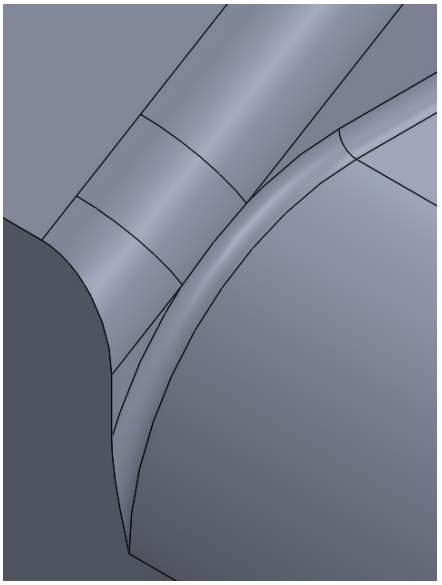

Figure 19 *The Detail D view of the model*

The following steps are required to complete this tutorial:

a. Start **SOLIDWORKS 2023** and open the part file.
b. Change the unit to **MMGS**.
c. Set measuring precision upto 2 decimal places.

d. Apply fillets to the model.
e. Save the file using the **SAVE AS** tool and then close the document.

Starting SOLIDWORKS 2023 and Opening the Model

First, you need to start SOLIDWORKS and open a model.

1. Double-click on the **SOLIDWORKS 2023** shortcut icon on the desktop of your computer to start SOLIDWORKS.

2. Choose the **Open** button from the Menu Bar to display the **Open** dialog box.

3. Browse the downloaded folder and extract the *CSW_tut_03.zip* file.

4. Select the *CSW_tut_03.SLDPRT* file from the *CSW_tut_03* folder and then choose the **Open** button; the model gets opened in the assembly environment, as shown in Figure 20.

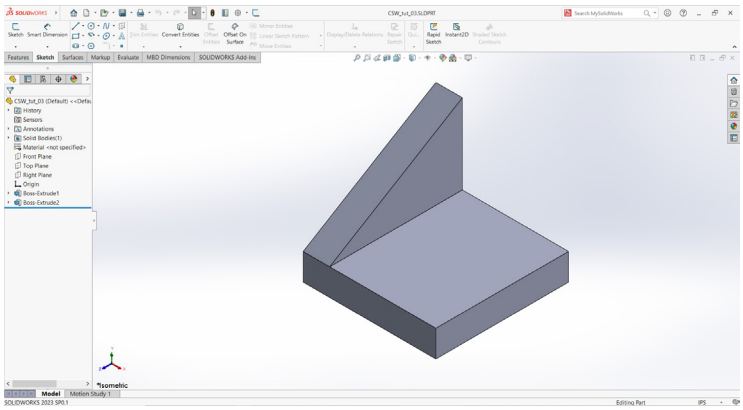

Figure 20 *The model in the part environment*

Changing Dimension Unit

In this section, you will need to change the dimesion unit and its precision.

1. Select the **Edit Document Units** option from the Unit system in the status bar; the **Document Properties - Units** dialog box gets displayed.

2. Click the **Units** option in the dialog box and select the **MMGS** radio button in the **Unit system** area. Next, select **.12** from the **Length** row in the **Basic Units** area and also select **.12** from the **Length** row in the **Mass/Section Properties** area.

3. Choose the **OK** button to close the dialog box.

Applying Fillets

In this section, you will apply fillets to the model.

1. Choose the **Fillet** tool from the **Features CommandManager**; the **Fillet PropertyManager** gets displayed.

2. Set the value to **2 mm** in the **Radius** spinner.

3. Select the edge, as shown in Figure 21; the selected edge is displayed in the **Edges, Faces, Features and Loops** selection box. Choose the **OK** button to close the **Fillet PropertyManager**. Figure 22 shows the model with fillet.

   Similarly, apply another fillet of radius **0.5 mm** to the model , refer to Figure 23.

4. Apply next fillet of radius **6.5 mm** by using the **Face Fillet** option, refer to Figure 24.

   You will notice the fillet arrangement achieved is not as shown in Figure 19. Here the sequence of fillet creation plays a major role.

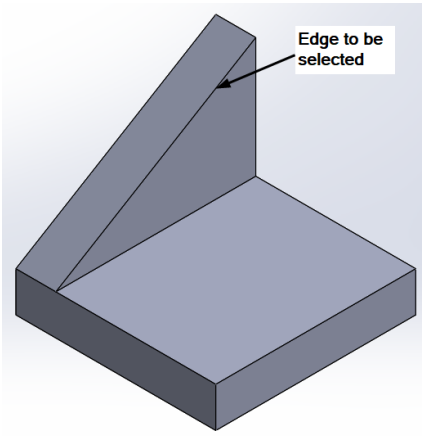

Figure 21 *The edge to be selected for adding fillet*

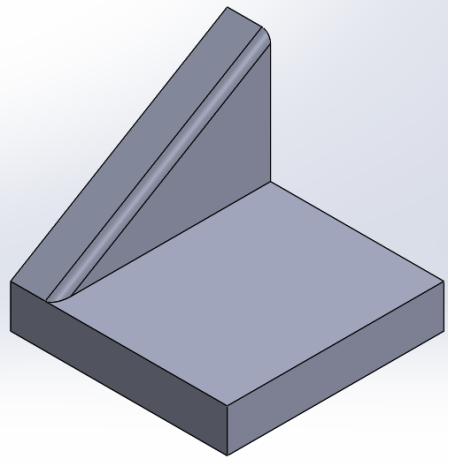

Figure 22 *The model after adding fillet*

To acheive the desired result, we need to first delete some fillets and then reapply some.

5. Delete fillets, refer to Figure 25. Now, apply fillet to the model, refer to Figure 26. Similary, apply next fillet to the other edge of the model, refer to Figures 27 and 28. Here, you will notice that we get the desired model.

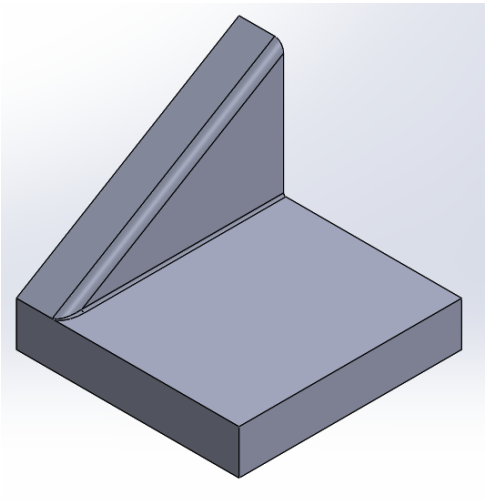

Figure 23 *The model after adding fillet*

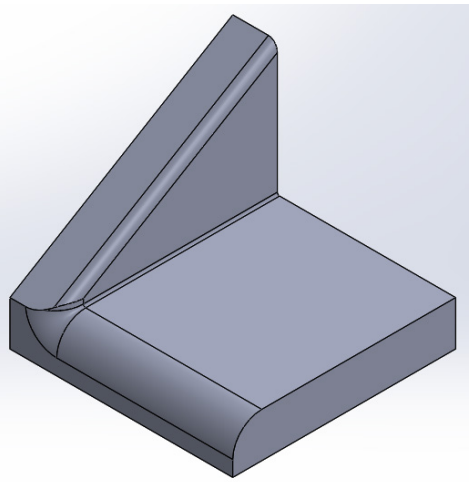

Figure 24 *The model after adding fillet*

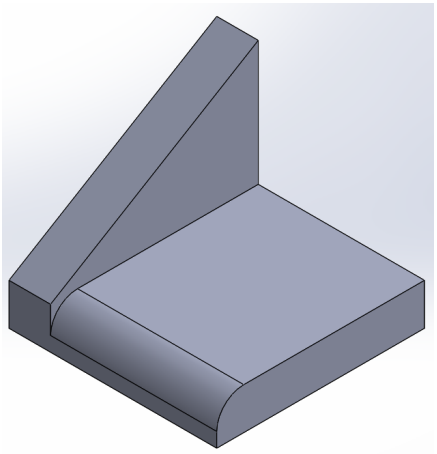

Figure 25 *The model after removing the fillet*

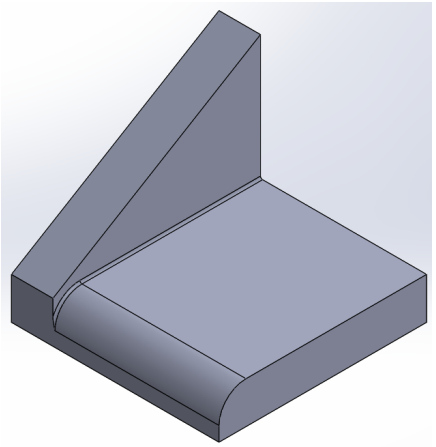

Figure 26 *The model after applying the fillet*

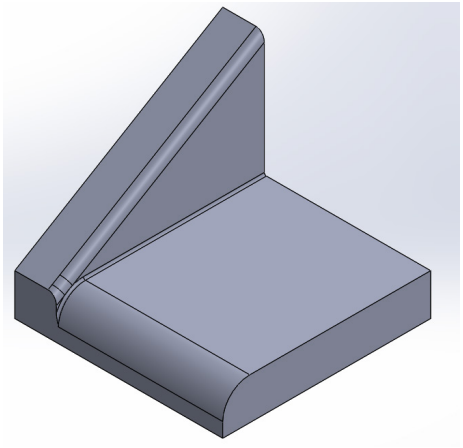

Figure 27 *The model after applying the fillet*

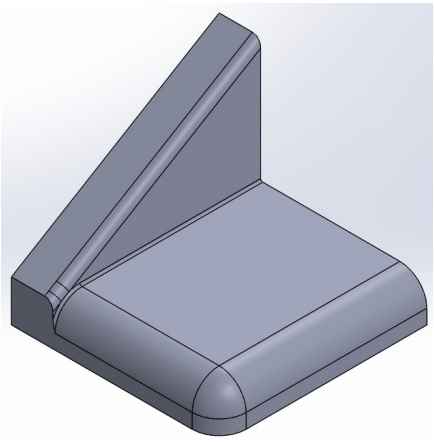

Figure 28 *The model after applying the remaining fillet*

Measuring the Mass of the Model

In this section, you will need to measure mass of the model.

1. Before measuring the mass of the model, ensure that desired material is applied to the model.

2. Right click on **Material <not specified>** from the **Feature Manager Design Tree**; a shortcut menu is displayed. Choose the **Edit Material** option from the shortcut menu; the **Material** dialog box is displayed.

3. Expand the **SOLIDWORKS Materials** node in the **Material** dialog box and select the **Aluminium Alloys** node. Expand the **Aluminium Alloys** node and select **6061 alloy**. Choose the **Apply** button to apply the material and then choose the **Close** button to close the dialog box.

4. Select the **Mass Properties** tool from the **Evaluate CommandManager**; the **Mass Properties** dialog box with the mass value is displayed, refer to Figure 29.

Mass of the model is **85.30** grams.

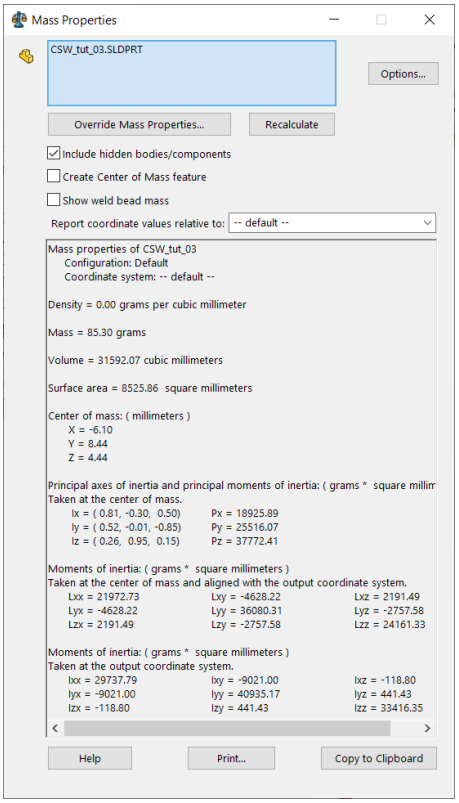

Figure 29 *The* ***Mass Properties*** *dialog box*

Saving the Model

Next, you need to save the file.

1. Choose the **Save As** button to save the file; the **Save As** dialog box is displayed. Specify the path to save the file and then choose the **Save** button.

EXERCISES

To perform the exercises, you need to download the zipped file named as *c19_SW_input* from the **Input Files** section of the CADCIM website. The complete path for downloading the file is:

Textbooks > CAD/CAM > SolidWorks > SOLIDWORKS 2023 for Designers > Input Files

Exercise 1

Create a spring based on the sketch provided in Figure 30. The 3D model of the spring shown in Figure 31.

Details of the Spring model are given next:
Material: 6061 alloy
Density: 2700 kg / m3

Mass: grams
Decimal Places: 3
Part Units: MM

A = 45.000
B = 45.000 radius
C = 50.000
D = 3.000 diameter
E = 25.000 diameter

Number of coils: 10

What is the overall mass of the part?

(Expected time: 10 min)

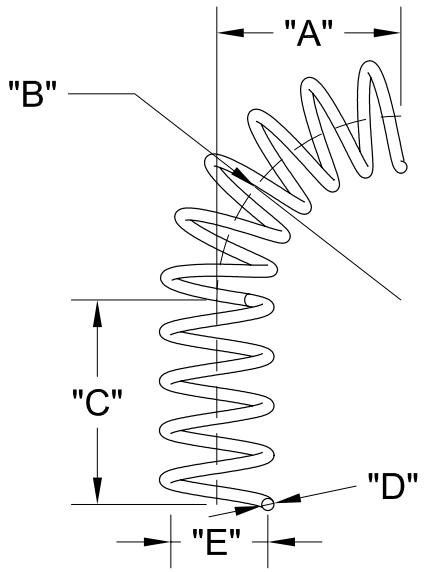

Figure 30 *The sketch of spring*

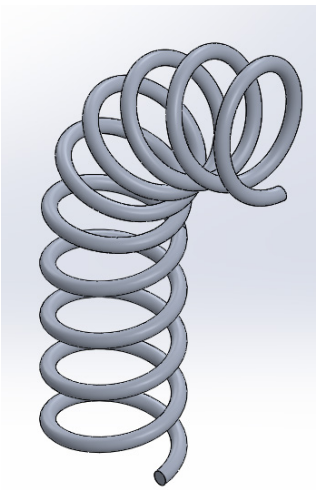

Figure 31 *The 3d model of spring*

Exercise 2

Open *csw_exr_02.SLDPRT* file, refer to Figure 32. Add a hole of 80 mm diameter passing through the model, refer Figure 33 and 34. Before adding the hole, create its configuration with the name *add_hole*.

Details of the model are given next:
Material: AISI 1020
Density: 7900 kg / m3

Mass: grams
Decimal Places: 2
Part Units: MM

What is the overall mass of the *add_hole* configuration part?

(Expected time: 10 min)

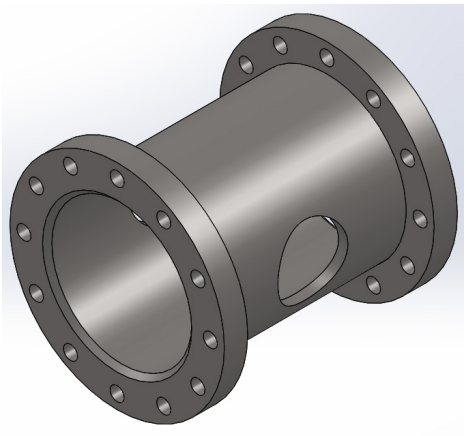

Figure 32 *The3D cylindrical model*

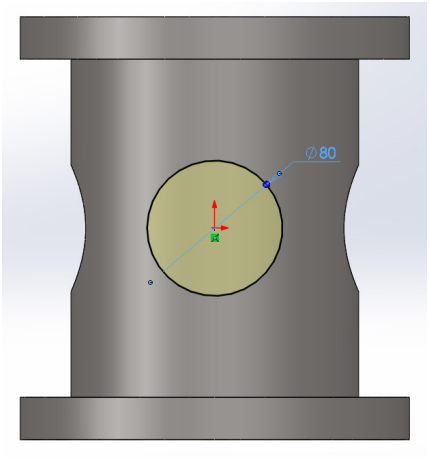

Figure 33 *The Dimension of hole*

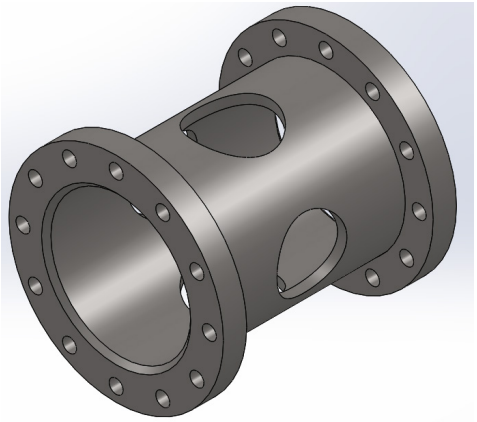

Figure 34 *The 3D cylindrical model after adding hole*