Chapter 1

Introduction to Solid Edge 2023

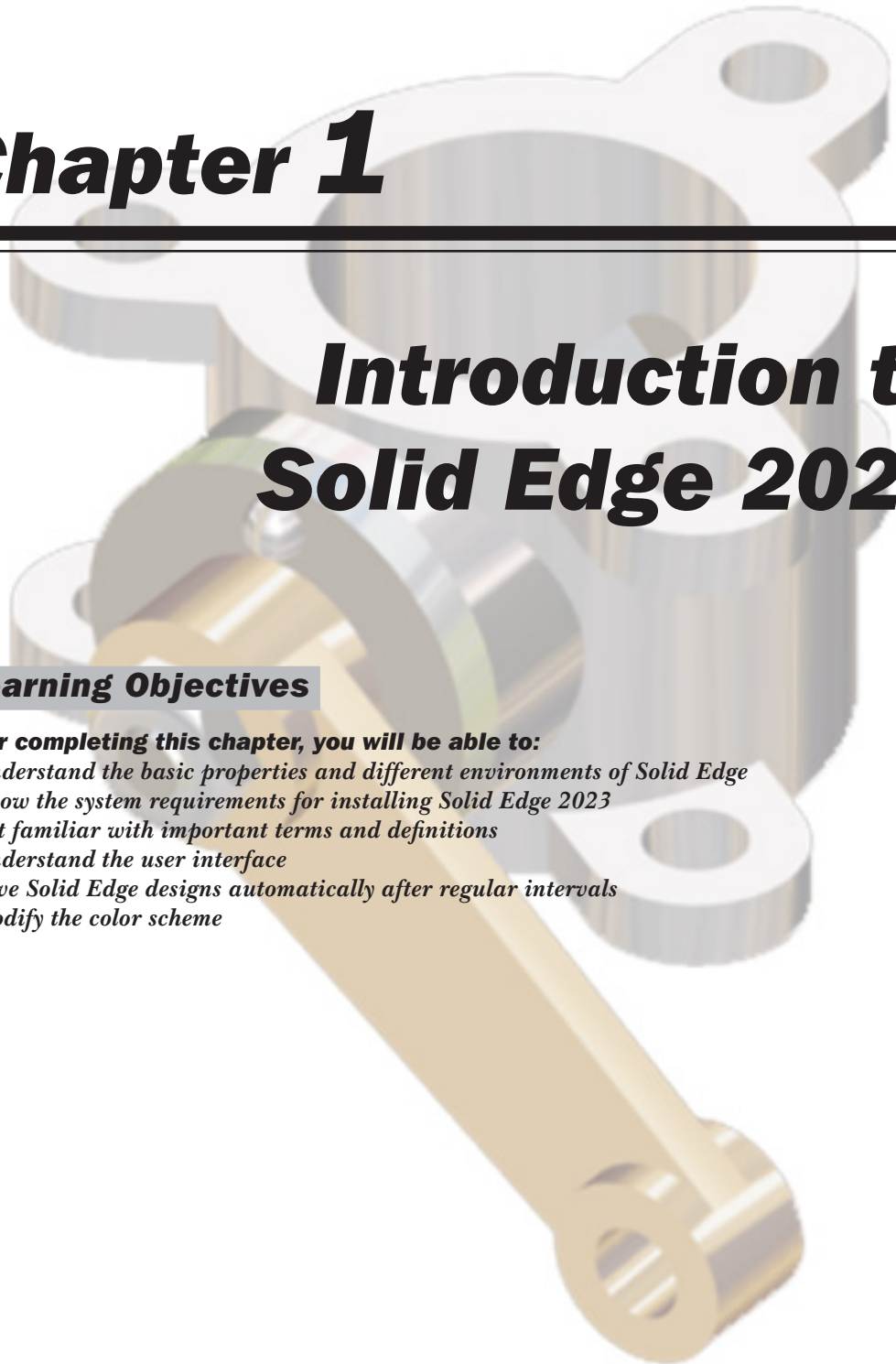

Learning Objectives

After completing this chapter, you will be able to:

- *Understand the basic properties and different environments of Solid Edge*
- *Know the system requirements for installing Solid Edge 2023*
- *Get familiar with important terms and definitions*
- *Understand the user interface*
- *Save Solid Edge designs automatically after regular intervals*
- *Modify the color scheme*

INTRODUCTION TO Solid Edge 2023

Welcome to the world of Solid Edge 2023, a product of SIEMENS. If you are a new user of this software, you will join hands with thousands of users of this high-end CAD tool worldwide. This software helps the users to improve their design skills. Also, in this software, the user interaction has been taken to a new level, thus making Solid Edge one of the easiest and popular mechanical CAD products.

Solid Edge is a powerful software that is used to create complex designs with great ease. The design intent of any three-dimensional (3D) model or an assembly is defined by its specification and use. You can use the powerful tools of Solid Edge to capture the design intent of any complex model by incorporating intelligence into the design. With Synchronous Technology, Solid Edge redefines the rules of 3D modeling. It combines the speed and flexibility of modeling with precise control of dimension-driven design, thereby generating tremendous productivity gains over traditional methods.

In Solid Edge, the synchronous and traditional (now called Ordered) modeling environments are combined into a single modeling environment. This means you do not need two separate environments to work with synchronous and traditional modeling technologies. The most interesting feature is that you can switch between the **Synchronous Part** and **Ordered Part** environments and can convert a particular Ordered feature into a Synchronous feature.

To make the design process simple and efficient, this software package divides the steps of designing into different environments. This means each step of the design process is completed in a different environment. Generally, a design process involves the following steps:

- Sketching by using the basic sketch entities and converting them into features or parts.
- These parts can be sheet metal parts, surface parts, or solid parts.
- Assembling different parts and analyzing them.
- Generating drawing views of the parts and assembly.

All these steps are performed in different environments of Solid Edge, namely **Synchronous Part/Ordered Part**, **Assembly**, **Synchronous Sheet Metal/Ordered Sheet Metal**, and **Draft**.

Solid Edge provides Software Development Kit (SDK) that helps you customize Solid Edge according to your requirement. Solid Edge also provides assistance, tutorials, and technical support to the users. The tutorials can be browsed from the welcome screen. You can view as well as work on the models simultaneously. Solid Edge helps you find commands quickly by using the Command Finder. The enhanced tooltip in Solid Edge provides you complete information of a tool such as its name and description as well as the shortcut keys to invoke the tool.

Solid Edge supports data migration from various CAD packages such as AutoCAD, SOLIDWORKS, CREO, Inventor, CATIA, and NX. As a result, you can convert all the files and documents created in these software into a Solid Edge document. You can also view or change the settings of a file while importing it. Solid Edge allows you to evolve a 3D model from a 2D drawing created in the **Draft** environment of Solid Edge or imported from any other software.

Solid Edge 2023 is a synchronous, parametric, and feature-based solid modeling software. The bidirectional associative nature of this solid modeling software makes the design process very

Evaluation Copy. Do not reproduce. For information visit www.cadcim.com

simple and less time-consuming. The synchronous, parametric, feature-based, and bidirectional properties of this software are explained next.

Synchronous Technology

The Synchronous Technology and the new commands and workflow concepts of Solid Edge has made modeling in this software much easier, faster, and accurate than in any other parametric modeling software package. This is because the synchronous technology enables you to create sketches as well as to develop features in the same environment. Note that the features created in the **Synchronous Part** environment do not depend on the order of their creation. Therefore, the editing of the model becomes a lot easier. This state-of-the-art technology makes Solid Edge 2023 a completely feature-based 2D/3D CAD software package.

Parametric Nature

Parametric nature of a solid modeling package means that the sketch is driven by dimensions, or in other words, the geometry of a model is controlled by its dimensions. For example, to model a rectangular plate of 100X80 units, you can draw a rectangle of any dimension and then modify its dimensions to the required dimensions of the plate. You will notice that the dimensions drive the geometry of the sketch.

Therefore, using this parametric property, any modification in the design of a product can be accomplished at any stage of the product development. This makes the design flexible.

Feature-based Modeling

A feature is defined as the smallest building block of a model. Any solid model created in Solid Edge is an integration of a number of features. Each feature can be edited individually to make any change in the solid model. As a result, the feature-based property provides greater flexibility to the created parts.

The advantage of dividing a model into a number of features is that it becomes easy to modify the model by modifying the features individually. For example, Figure 1-1 shows a model with four simple holes near the corners of the plate.

Now, consider a case where you need to change all outer holes to counterbore holes. In a non-feature based modeling package, you need to delete all the holes and then create the counterbore holes. However, in Solid Edge, you can modify some parameters of the holes in the same part and convert the simple holes into counterbore holes, see Figure 1-2.

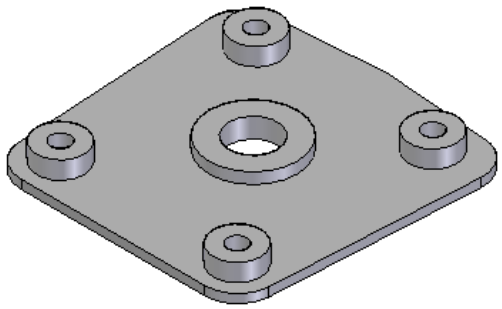

Figure 1-1 *Model with simple holes*

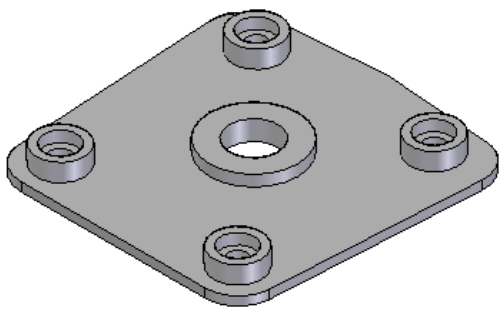

Figure 1-2 *Model with counterbore holes*

Evaluation Copy. Do not reproduce. For information visit www.cadcim.com

Bidirectional Associativity

The bidirectional associativity of a software package is defined as its ability to ensure that any modification made in a particular model in one environment is also reflected in the same model in the other environments. For example, if you make any changes in a model in the Part environment, the changes will reflect in the same model in the **Assembly** environment and vice-versa.

Consider the assembly shown in Figure 1-3. The piston is connected to the connecting rod through a pin. It is clear from the assembly that the diameter of the hole is more than what is required. In an ideal case, the diameter of the hole on the piston should be equal to the diameter of the pin.

Now, when you open the piston in the Part environment and modify the diameter of the hole on it, the same modification is also reflected in the **Assembly** environment, as shown in Figure 1-4. This is due to the bidirectional associative nature of Solid Edge.

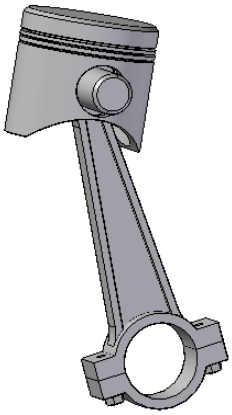

Figure 1-3 *Piston, connecting rod, and pin assembly*

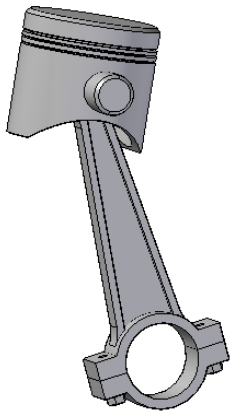

Figure 1-4 *Assembly after modifying the diameter of the hole on the piston*

Similarly, if the modification is made in the **Assembly** environment, the piston, when opened in the **Part** environment, is also modified automatically. This shows that the **Part** and **Assembly** environments of Solid Edge are associative by nature.

Now, consider the model shown in Figure 1-1. Its top and the sectioned front views are shown in Figure 1-5. Now, when you open the model in the **Part** environment and modify the simple holes near the corners of the plate, refer to Figure 1-1, into the counterbore holes, refer to Figure 1-2. The same modification will not reflect automatically in the drawing views of the model in the **Draft** environment. To reflect the modifications in the **Draft** environment, you need to update them manually using the **Drawing View Tracker** or **Update Views** tool. These tools will be discussed in Chapter 12. After updating the views using the **Drawing View Tracker** or **Update Views** tool, the drawing will be displayed, as shown in Figure 1-6.



Note

*The modifications done in the views in the **Draft** environment do not reflect in other environments.*

Evaluation Copy. Do not reproduce. For information visit www.cadcim.com

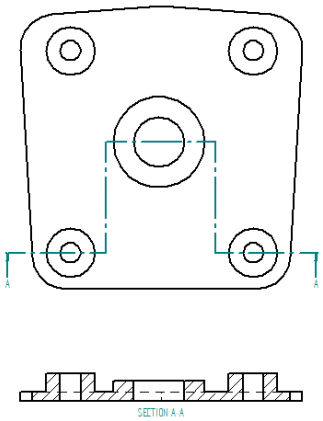

Figure 1-5 *Drawing views of the model before modification*

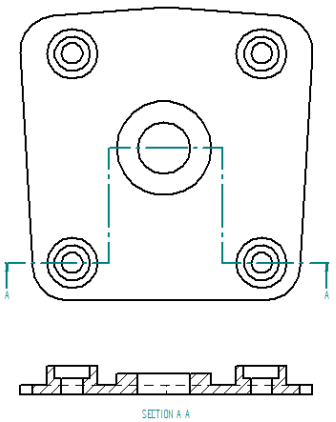

Figure 1-6 *Drawing views of the model after modification*

Solid Edge ENVIRONMENTS

To reduce the complexity of a design, this software package provides you with various design environments. You can capture the design intent easily by individually incorporating the intelligence of each design environment into the design. The design environments available in Solid Edge are discussed next.

Part Environment

This environment of Solid Edge 2023 is used to create solid as well as surface models. The Part environment consists of two environments namely **Synchronous Part** and **Ordered Part**. You can switch between these environments and create a model which consists of both synchronous and ordered features. To invoke this environment, start Solid Edge 2023 by double-clicking on its shortcut icon on the desktop of your computer. After Solid Edge 2023 starts, the theme selection window will be displayed. In the theme selection window, select the required user interface theme and then choose the **OK** button; the Solid Edge 2023 window along with the welcome screen will be displayed. From this screen, choose the **New** command from the **Quick Access** toolbar; the **New** dialog box will be displayed. Choose the **iso metric part** option from this **New** dialog box; the Part environment gets started with ISO units. By default, the **Synchronous Part** environment is invoked. However, you can switch to the **Ordered Part** environment by choosing the **Ordered** radio button from the **Model** group of the **Tools** tab.



Note

1. The theme selection window will only be displayed when you start Solid Edge for the first time after installation.

*2. In this textbook, the **Balanced - Solid Edge Default** theme is used as the user interface theme.*

Synchronous Part

Solid Edge 2023 with the Synchronous Technology makes it a complete feature-based 2D/3D CAD system. This technology combines the speed and flexibility of direct modeling with precise control of dimension-driven design. In this environment, there is no separate environment to

Evaluation Copy. Do not reproduce. For information visit www.cadcim.com

draw sketches; rather the sketching tools are available in the **Synchronous Part** environment itself. It includes direct model creation and modification through precision sketching, region selection, face selection, and handle selection.

Ordered Part

The **Ordered Part** environment of Solid Edge 2023 is used to create parametric and feature-based solids as well as surface models. You can draw sketches of models or features by invoking the sketching environment. Once the sketch is drawn, you can convert it into a solid model using simple but highly effective modeling tools. One of the major advantages of using Solid Edge is the availability of Command bar. The Command bar is displayed in the drawing window. In this environment, you can create a feature step by step by using the Command bar. You can also use the Command bar to easily go one or more steps backward to modify a parameter. You can also convert the features created in this environment to the synchronous features for editing them directly. The models created in the **Part** environment can also be used in other environments of Solid Edge to complete the model's life cycle, also known as the Product Life Cycle.

Assembly Environment

This environment of Solid Edge is used to create an assembly by assembling the components that were created in the **Synchronous/Ordered Part** environment. Both the synchronous and ordered tools are combined in this environment. This environment supports animation, rendering, piping, and wiring. Other visualization and presentation tools are also available in this environment. In addition to that, you can apply a relation between the faces of two different synchronous components in an assembly. For example, you can make the selected face of a component tangent with the target face of another component.

Draft Environment

This environment is used for the documentation of the parts or the assemblies in the form of drawing views. The drawing views can be generated or created. All the dimensions added to the component in the part environment during its creation can be displayed in the drawing views in this environment.

Sheet Metal Environment

This environment is used to create sheet metal components. If you are familiar with the part environment, then modeling in this environment becomes easy. This is because in addition to the sheet metal modeling tools, this environment works in a way similar to the part environment. To invoke this environment, start Solid Edge 2023; a welcome screen will be displayed. Choose the **New** command from the **Quick Access** toolbar; the **New** dialog box will be displayed. Choose the **iso metric sheet metal** option from the **New** dialog box; the Sheet Metal environment gets started with the ISO units. By default, the **Synchronous Sheet Metal** environment is invoked. However, you can switch to the **Ordered Sheet Metal** environment by selecting the **Ordered** radio button from the **Tools** tab.

Synchronous Sheet Metal

The **Synchronous Sheet Metal** environment is used to create and edit sheet metal components in a history-free approach. The procedure of selection of faces introduced in this environment allows you to model sheet metals directly. You can create a dimension-driven design of the sheet metal components in Solid Edge.

Evaluation Copy. Do not reproduce. For information visit www.cadcim.com

Ordered Sheet Metal

The **Ordered Sheet Metal** environment is used to create parametric and feature-based sheet metal components.

SYSTEM REQUIREMENTS FOR INSTALLING Solid Edge 2023

The preferred minimum system requirements for Solid Edge 2023 are as follows:

1. Windows 10 Enterprise or Professional (64-bit only) version 20H2 or later
2. Internet Explorer 11
3. 16 GB RAM minimum
4. Disk space for installation = 9 GB
5. Screen Resolution: 1920 x 1080 or higher
6. 65K colors
7. Microsoft Office 2019, 2021, or Microsoft Office 365 Business

IMPORTANT TERMS AND DEFINITIONS

Some important terms that are used in this textbook are discussed next.

Relationships

Relationships are the logical operations that are performed on a selected geometry to make it more accurate by defining its position and size with respect to the other geometry. There are two types of relationships available in Solid Edge and they are discussed next.

Geometry Relationships

These logical operations are performed on the basic sketched entities to relate them to the standard properties such as collinearity, concentricity, perpendicularity, and so on. Although Solid Edge automatically applies these relationships to the sketched entities at the time of drawing, you can also apply them manually. You can apply different types of geometry relationships, which are discussed next.

Connect

This relationship connects a point to another point or entity.

Concentric

This relationship forces two selected curves to share the same center point. The curves that can be made concentric are circles, arcs, and ellipses.

Horizontal/Vertical

This relationship forces the selected line segment or two points to become horizontal or vertical.

Collinear

This relationship forces two line segments to lie on the same line.

Evaluation Copy. Do not reproduce. For information visit www.cadcim.com

Parallel
This relationship is used to make two line segments parallel.

Perpendicular
This relationship makes a line segment perpendicular to another line segment or series of line segments.

Lock
This relationship is used to fix an element or a dimension such that it cannot be modified.

Tangent
This relationship is used to make the selected line segment or curve tangent to the selected line or curve.

Equal
This relationship forces the selected line segments to be of equal length. It also forces two curves to be of equal radius.

Symmetric
This relationship is used to force the selected sketched entities to become symmetrical about a sketched line segment, which may or may not be a center line.

Rigid Set
This relationship is used to group the selected sketched entities into a rigid set so that they behave as a single unit.

Feature Relationships (Only in Synchronous Part Environment)

The feature relationships are the relationships that are applied on a selected face to make it geometrically related to the target face. These relationships are used to modify the parts created in the **Synchronous Part** environment. These relationships are available in the **Face Relate** group of the **Home** tab in the **Ribbon** in the **Synchronous Part** environment. The following types of feature relationships can be applied between faces:

Concentric
This relationship makes the selected faces concentric with the target face.

Coplanar
This relationship makes the selected faces coplanar with the target face.

Parallel
This relationship enables you to make the selected faces parallel to the target face.

Perpendicular
This relationship helps you to make the selected faces perpendicular to the target face.

Tangent
This relationship makes the selected faces tangent with the target face.

Evaluation Copy. Do not reproduce. For information visit www.cadcim.com

Rigid
This relationship is used to make all the faces in the selection set rigid with respect to each other. This means, if either of the face is moved or rotated, then all the related faces will also move or rotate, thereby maintaining the distance and orientation between them.

Ground
This relationship grounds or constrains the selected face in the model space. As a result, the grounded faces can be neither moved nor rotated.

Symmetry
This relationship makes a selected face symmetric to a target face about a symmetry plane.

Equal
This relationship makes the radius of a selected cylindrical face equal to the radius of a target cylindrical face.

Aligned Holes
This relationship is used to make the axes of multiple cylindrical faces coplanar.

Offset
This relationship is used to offset a face with respect to another face.

Horizontal/Vertical
This relationship forces a horizontal/vertical face or keypoint to align with another horizontal/vertical face or keypoint.

Assembly Relationships
The assembly relationships are the logical operations that are performed on the components to assemble them at their respective working positions in an assembly. These relationships are applied to reduce the degrees of freedom of the components.

FlashFit
This relationship minimizes the efforts of applying various relationships like: Mate, Planar Align, and so on by automatically positioning the component wherever required.

Mate
This relationship is used to make the selected faces of different components coplanar. You can also specify some offset distance between the selected faces.

Planar Align
This relationship enables you to align a planar face with the other planar face.

Axial Align
This relationship enables you to make a cylindrical surface coaxial with the other cylindrical surface.

Evaluation Copy. Do not reproduce. For information visit www.cadcim.com

Insert
This relationship is used to mate the faces of two components that are axially symmetric and also to make their axes coaxial.

Connect
This relationship enables you to connect two keypoints, line, or a face on two different parts.

Angle
This relationship is used to place the selected faces of different components at some angle with respect to each other.

Tangent
This relationship is used to make the selected face of a component tangent to the cylindrical, circular, or conical faces of the other component.

Cam
This relationship applies the cam-follower relationship between a closed loop of tangent face and the follower face.

Parallel
The Parallel relationship is used to force two edges, axes, or an edge and an axis parallel to each other.

Gear
The Gear relationship allows you to apply rotation-rotation, rotation-linear, or a linear-linear relationship between two components.

Center-Plane
This relationship is used to align a component at an equal distance between the two faces of other component, planes, or key points.

Path
This relationship is used to apply a mate such that the part moves along a path.

Match Coordinate Systems
This relationship is used to match the coordinate system of one component/part with the coordinate system of another component/part.

Rigid Set
This relationship is used between two or more components to fix them such that they become rigid with respect to each other.

Ground
This relationship is used to fix a component at a specified location and orientation. Solid Edge automatically applies a ground relationship to the first part placed in an assembly.

Evaluation Copy. Do not reproduce. For information visit www.cadcim.com

Entity

An element of a geometry is called an entity. An entity can be an arc, line, circle, point, and so on.

Concept of a Profile and a Sketch

In Solid Edge, there are two methods of drawing a sketch. The first method is to draw a sketch in the sketching environment by invoking the **Sketch** tool from the **Home** tab. The second method is to invoke a feature creation tool such as **Extrude**, **Revolve**, and so on and then draw the sketch for the feature. The sketch drawn using the first method is called a Sketch and the sketch drawn using the second method is called a Profile. You will learn more about this in the later chapters of this book.



Note

*1. If you are working in the **Synchronous Part** environment, you cannot invoke a feature creation tool such as **Extrude** and **Revolve** if you do not have a sketch.*

*2. In the **Synchronous Part** environment, you can select the sketching tools without switching to another environment.*

Intent Zone

The intent zone is defined by a circular area that is divided into four quadrants. It is used while drawing an arc or a circle from a line or vice-versa. The quadrants define whether the element is perpendicular, tangent, or at some other orientation from the other element. This zone enables you to draw or modify various elements of a geometry within the same tool. For example, while drawing a line tangent to an arc, you can draw a tangent arc or a perpendicular arc by moving the cursor in the intent zone. The movement of the cursor in the intent zone determines the creation of a tangent or a perpendicular arc. The intent zone while drawing a tangent arc and a three point arc is shown in Figures 1-7 and 1-8, respectively.

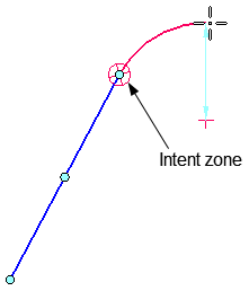

Figure 1-7 *Intent zone displayed while drawing a tangent arc*

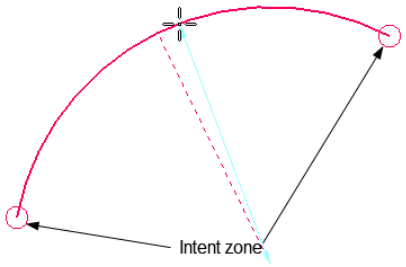

Figure 1-8 *Intent zone displayed while drawing a three point arc*

GETTING STARTED WITH Solid Edge 2023

After you have installed Solid Edge on your computer, double-click on the shortcut icon of Solid Edge 2023 on the desktop of your computer; the welcome screen will be displayed. In this screen, links for various environments will be displayed after you select the **New** command from the **Quick Access** toolbar. You can start a new document in the desired environment by clicking on the corresponding link in this area. As discussed earlier, the designing steps in Solid Edge are performed in different environment.

Evaluation Copy. Do not reproduce. For information visit www.cadcim.com

You can open the existing documents by choosing the **Browse** button from the **Open** area. The links for the recently used files are displayed in the **Recent Files** area. You can click on the link of the required document in this area to open that document. The welcome screen also displays the link for the step-by-step tutorials in the **Learn** area. The **Links** area contains the links for the home page and the components catalog page of Solid Edge. However, you can add or remove links by using the **Edit** button available at the top-right corner of the **Links** area. Choose the **ISO Metric Part** from the **New** area of the welcome screen; a new Solid Edge document in the **Synchronous Part** environment will be displayed, as shown in Figure 1-9.

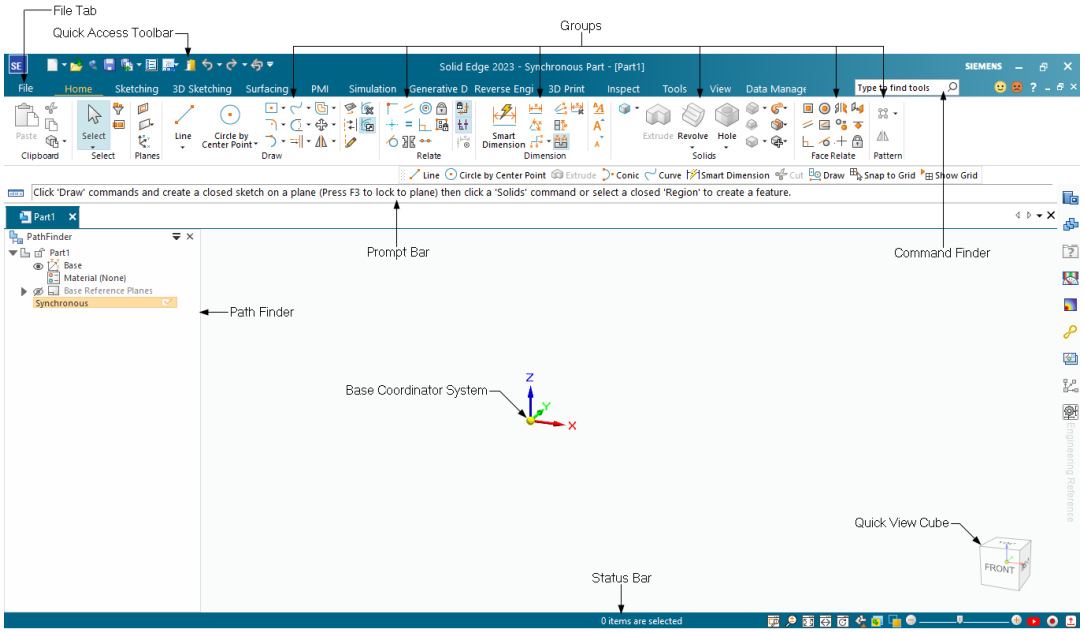

Figure 1-9 *New document in the* ***Synchronous Part*** *environment*

USER INTERFACE OF Solid Edge

Solid Edge provides you a **Ribbon** with different tabs and groups. There are different tabs and groups for different working environments. Every environment has the PathFinder and the prompt line that assist you in creating the design. Various components of the interface are discussed next.

Prompt Line

If you invoke a tool, the prompt line is displayed in the prompt bar. This line is very useful for creating a model because it provides you with the prompt sequences to use a tool.

PathFinder

The PathFinder, as shown in Figure 1-10, is on the left in the drawing area. It lists all the occurrences of features and sketches of a model in a chronicle sequence.

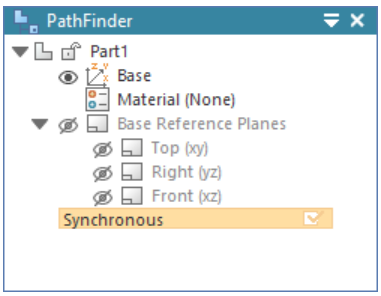

Figure 1-10 *The PathFinder*

Evaluation Copy. Do not reproduce. For information visit www.cadcim.com

Docking Window

The docking window is available on the right of the screen and it remains collapsed by default. These tabs can be used to activate the feature library, family of parts, and so on. The docking window expands when you move the cursor over the left or right pane of the screen. In case, any tab is missing in it, choose the **Panes** button from the **Show** group in the **View** tab; a flyout will be displayed with various options. Choose the required option; the tab corresponding to that option will be added to the docking window. The options available in the docking window are discussed later in this textbook.



Note

Remember that though the profiles of the features are not displayed in the PathFinder but the sketches are displayed. You will learn about the difference between sketches and profiles later in this textbook.

File Tab

The **File Tab** is available on the top left corner of the Solid Edge window. It is present in all environments. On choosing this option, the **File Tab** menu containing the options for creating, opening, saving, and managing documents will be displayed.

Quick Access Toolbar

The **Quick Access** toolbar is available on the top-left of the title bar of the Solid Edge window, refer to Figure 1-11. It provides you an access to the frequently used commands such as **New**, **Open**, **Undo**, **Redo**, **Save**, and **Print**. However, by default, only the **Save**, **Undo**, and **Redo** options are displayed in the **Quick Access** toolbar. To add commands such as **New**, **Open**, and so on, choose the black arrow on the right of the **Quick Access** toolbar; the **Customize** flyout will be displayed. Choose the required command from the flyout; the **Save Theme As** dialog box will be displayed if you have chosen the command to add for the first time. Enter the theme name in the **New theme name** edit box and the selected command will be added to the **Quick Access** toolbar. You can also deselect a command name from flyout to remove it from the **Quick Access** toolbar.



Figure 1-11 *The* ***Quick Access*** *toolbar*

You can also customize the **Quick Access** toolbar to add more commands to it. To do so, invoke the **Customize** flyout again and then choose the **Customize** option from it; the **Customize** dialog box will be displayed. Choose the **Quick Access** tab, if not chosen. In this dialog box, select the required option from the **Choose commands from** drop-down list; the corresponding menus will be available in a list box displayed below it. Invoke the required tool from the list box and then choose the **Add >>** button to add the tool to the **Quick Access** toolbar. Similarly, you can also remove commands by using the **Customize** dialog box. To do so, select the required command from the list box at the right in this dialog box; the **< < Remove** button will be activated. Choose the **Remove** button; the selected command will be removed from the **Quick Access** toolbar. Choose the **Close** button from the **Customize** dialog box; the **Customize** message box will be displayed. Choose the **Yes** button from the message box; the **Save Theme As** dialog box will be displayed. Enter the name of the theme in the **New theme name** edit box in the **Save Theme As** dialog box and choose the **OK** button.

Evaluation Copy. Do not reproduce. For information visit www.cadcim.com

To remove any tool directly from the **Quick Access** toolbar, right-click on the required tool; a shortcut menu will be displayed. Choose the **Remove from Quick Access Toolbar** option from the shortcut menu; the corresponding tool will be removed from the toolbar.

Ribbon

The **Ribbon** is available at the top of the Solid Edge window and contains all application tools. It is a collection of tabs. Each tab has different groups and each group is a collection of similar tools. You can increase the drawing area by minimizing the **Ribbon**. To do so, right-click on a tab in the **Ribbon** and choose the **Minimize the Ribbon** option from the shortcut menu displayed.

You can also add commands in a group of the tab in the **Ribbon**. To do so, invoke the **Customize** dialog box and choose the **Ribbon** tab from it. Select the **All Commands** option from the **Choose commands from** drop-down list; the corresponding tools will be displayed in the left list box below it. Invoke the required tool from the list box and then click on the required group of the tab (where you want to add the command) in the list box at the right side in the **Customize** dialog box. After selecting the required group in the tab, the **Add** button will be activated. Choose the **Add** button; the selected command will be added to the selected group in the tab of the **Ribbon**. Choose the **Close** button from the **Customize** dialog box; the **Customize** message box will be displayed. Choose the **Yes** button from the message box; the **Save Theme As** dialog box will be displayed. Enter the name of the theme in the **New theme name** edit box of the **Save Theme As** dialog box and choose the **OK** button.

Status Bar

The status bar is available at the bottom of the Solid Edge window. It enables you to quickly access all the view controls like **Zoom Area**, **Zoom**, **Fit**, **Pan**, **Rotate**, **Sketch View**, **View Orientation**, and **View Styles**. A slider on the right of the Status Bar controls the amount of zooming. Most importantly, it consists of the Command Finder that helps you to locate the required command.

Record



In Solid Edge, you can use the **Record** button (located at the bottom right corner) to record a video while creating models, assemblies, drawings, and so on. On choosing this button, the **Record Video** dialog box will be displayed, as shown in Figure 1-12. The options in this dialog box can be used to specify various settings such as area to record, audio settings, video compression settings, and so on. After specifying the required settings, choose the **Record** button or press Shift+F9 to record a video. To stop recording the video, choose the **Stop** button or press Shift+F10; the recorded video will be played in the default video player. To save the video, switch back to the Solid Edge window, and choose the **Save** button from the **Record Video** dialog box; the **Save Video** dialog box will be displayed. Specify the name and location of the file and choose the **Save** button in the **Save Video** dialog box. To play the recorded video, choose the **Play** button from the **Record Video** dialog box. Alternatively, you can play the video from the location where it is saved.

Upload to YouTube



This button is available at the bottom right corner of the drawing window and is used to upload a recorded video to YouTube. On choosing this button, the **Upload to YouTube** dialog box will be displayed, as shown in Figure 1-13. In the dialog box, you can sign in a YouTube account using the **Sign in** button. You can select the video to be uploaded by using the **Browse**

Evaluation Copy. Do not reproduce. For information visit www.cadcim.com

button. The other options in the **Video Information** area of this dialog box are the same as those available in the YouTube upload page. After entering all the details, choose the **Upload** button to upload the video.

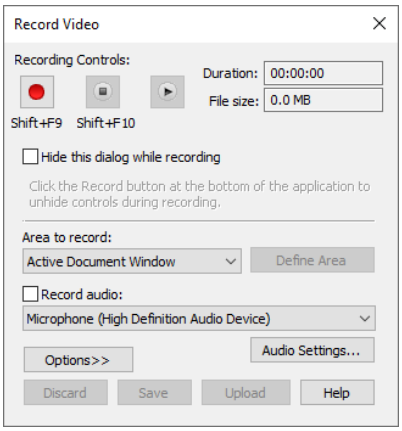

*Figure 1-12 The **Record Video** dialog box*

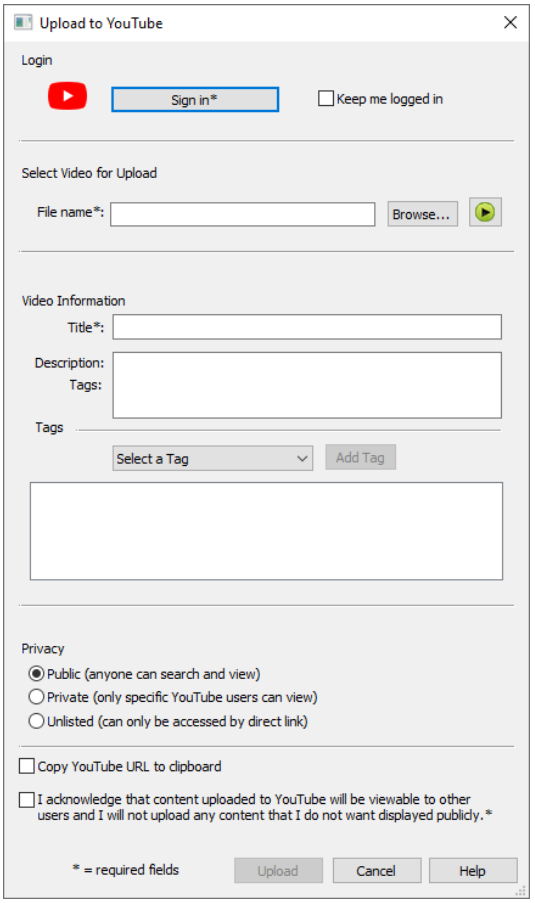

*Figure 1-13 The **Upload to YouTube** dialog box*

Command bar

The Command bar provides the command options for the active tool. It enables you to switch back and forth while creating a model, an assembly, or a drawing. It is available in all the environments of Solid Edge and contains different nodes/steps. The Command bar that is available for the **Extrude** tool is shown in Figure 1-14. However, the buttons displayed in the Command bar depend upon the tool invoked from the Part environment. For example, on invoking the **Extrude** tool, the nodes/steps displayed will have different options.

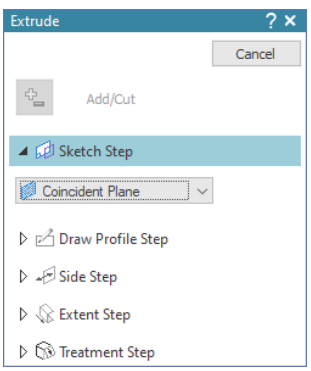

*Figure 1-14 The **Extrude** Command bar*

QuickPick

This tool enables you to select elements from the drawing window. This tool is used when the elements or the components are

Evaluation Copy. Do not reproduce. For information visit www.cadcim.com

overlapping and you need to make a selection. The following steps explain the procedure of using this tool:

1. Bring the cursor near the element or the component that you need to select. Now, pause the cursor, and when three dots appear close to it, right-click on the screen. On doing so, the **QuickPick** dialog box will appear with an entry of each possible selection, as shown in Figure 1-15.

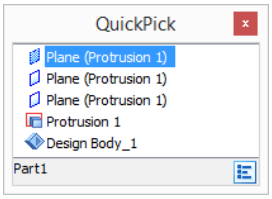

Figure 1-15 *The* ***QuickPick*** *dialog box*

2. In the **QuickPick** dialog box, each entry represents an element. As you move the cursor over the elements in this list, the corresponding components will get highlighted in the drawing window.

3. To exit the **QuickPick** dialog box, simply click on the screen.

Tip

You can use the Options button available at the bottom right corner in the ***QuickPick*** *dialog box to invoke the* ***QuickPick Options*** *dialog box. You can use the options in this dialog box to modify the* ***QuickPick*** *options.*

Part Environment Tabs

There are several tabs in the **Ribbon** that can be invoked in the Part environment. The tabs that are extensively used during the designing process in this environment are discussed next.

The View Tab

This tab is available in all the environments of Solid Edge. The **View** tab of the **Ribbon** is shown in Figure 1-16.

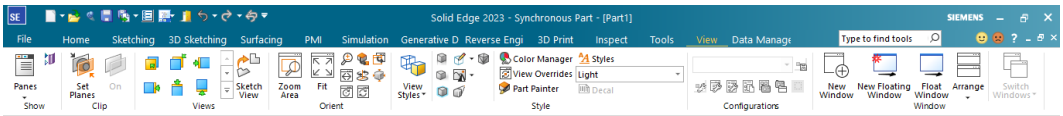

Figure 1-16 *The* ***View*** *tab in the Part environment*

The Home Tab

This tab consists of the modeling tools that are used to convert a sketch into a solid model. The **Home** tab along with all its tools is shown in Figure 1-17.

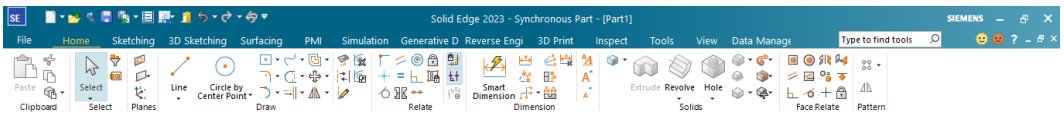

Figure 1-17 *The* ***Home*** *tab in the Part environment*

The Surfacing Tab

This tab contains the modeling tools that are used to create surface models. This tab is available only when you are in the Part environment. The **Surfacing** tab along with all its tools is shown in Figure 1-18.

Evaluation Copy. Do not reproduce. For information visit www.cadcim.com



*Figure 1-18 The **Surfacing** tab in the Part environment*

Assembly Environment Tabs

There are several tabs that can be invoked to create and manage assemblies in the **Assembly** environment of Solid Edge. One of these tabs is discussed next.

The Assemble Group

The **Assemble** group is available in the **Home** tab of the **Ribbon**. The tools in this tab are used to create and manage assemblies. The **Home** tab in the **Assembly** environment is shown in Figure 1-19.

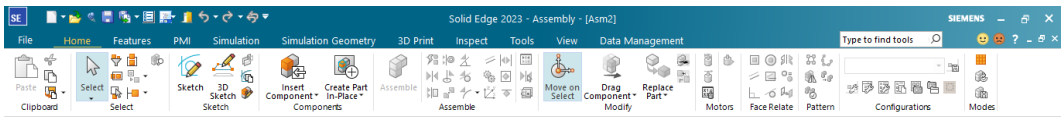

*Figure 1-19 The **Home** tab in the **Assembly** environment*

Draft Environment Tab

The **Ribbon** in the **Draft** environment provides you with various tools to generate and create drawing views. Various drafting tools available in the **Home** tab are shown in Figure 1-20.

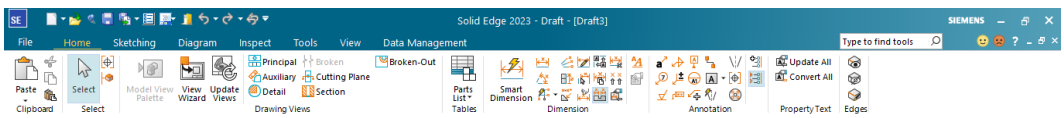

*Figure 1-20 The **Home** tab in the **Draft** environment*

Radial Menu

The Radial Menu has a set of tools arranged radially, as shown in Figure 1-21. To invoke a tool from the Radial Menu, press the right mouse button and drag the cursor; the Radial Menu will be displayed. Keeping the right mouse button pressed, move the cursor over the tool to be invoked and then release the mouse button; the tool will be invoked. You can add or remove the tools from the Radial Menu. To do so, right-click on the **Ribbon** and choose the **Customize the Ribbon** option from the shortcut menu displayed; the **Customize** dialog box will be displayed. Choose the **Radial Menu** tab. Next, select the category that contains the tool that you want to add to the Radial Menu from the **Choose commands from** drop-down list. On doing so, the categories and the commands are displayed in the list box. Next, drag and place the tool onto the Radial Menu image in the dialog



Figure 1-21 The Radial Menu in the Part environment

Evaluation Copy. Do not reproduce. For information visit www.cadcim.com

box; the tool will be displayed in the Radial Menu. To remove a tool from the Radial Menu, click on the tool in the Radial Menu image and drag it into the white space. Next, choose the **Close** button; the **Customize** message box will be displayed. Choose the **Yes** button from it to exit the **Customize** dialog box.

SIMULATION EXPRESS

Solid Edge provides you an analysis tool called **Simulation Express**. This tool is used to execute the linear static analysis and to calculate the displacement, strain, and stresses applied on a component with respect to the material, loading, and restraint conditions applied to a model. A component fails when the stress applied to it reaches a certain permissible limit. The Static Nodal displacement plot of the Master rod of the engine designed and analyzed by using the **Simulation Express** tool is shown in the Figure 1-22. Both the Femap and industry standard NX Nastran solvers are used in Solid Edge's **Simulation Express** tool.

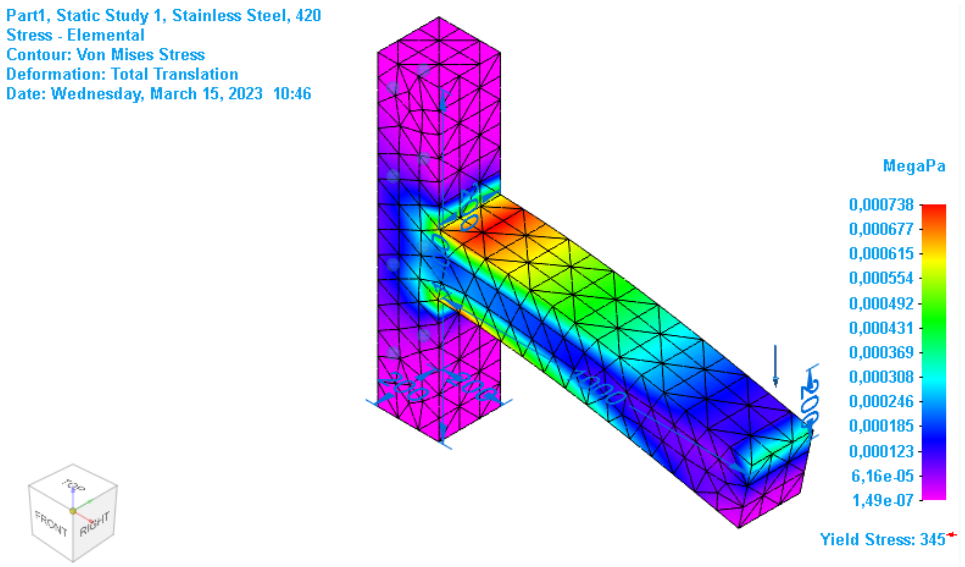

Figure 1-22 *The Master Rod analyzed using the* ***Simulation Express*** *tool*

USING INTELLISKETCH

The **IntelliSketch** is a dynamic drawing tool that allows you to draw a sketch with accuracy by specifying various relations like endpoint, midpoint, perpendicular, parallel, tangent, horizontal, vertical, and so on. The **IntelliSketch** shows the dynamic display of the relation while drawing a sketch. Moreover, while sketching a relationship indicator will be displayed at the cursor. Click when the indicator is displayed to apply the respective relation to the drawing. You can also apply a relation after drawing the sketch. Additionally, these relationships are maintained even when you modify the sketch. In the **Sketch** environment of the **Ordered Part** environment, the relations will be available in the **IntelliSketch** group of the **Home** tab whereas in the **Synchronous Part** environment, the relations will be available in the **IntelliSketch** group of the **Sketching** tab.

Evaluation Copy. Do not reproduce. For information visit www.cadcim.com

AUTOMATIC SAVING OPTION

In Solid Edge, you can set the option for saving the files automatically after a regular interval of time. While working on a design project, if the system crashes, you may lose the unsaved design data. If the option of automatic saving is on, your data is saved automatically after regular intervals. To set this option, choose **File Tab > Settings > Options**; the **Solid Edge Options** dialog box will be displayed. Choose the **Save** tab and select the **Automatically preserve documents by** check box. You can also select the **Prompting me to save all documents every** radio button and set the minutes in the spinner. You can also select the **Creating uniquely named backup copies of unsaved documents every** radio button to save uniquely named copies of the documents at a specified location. By default, the files will be saved in the default folder. You can change the default backup folder location by choosing the **File Locations** tab from the dialog box.

COLOR SCHEME IN Solid Edge

In Solid Edge, you can use various color schemes as the background color of the drawing window and for displaying the entities in it. Note that this book uses white as the background color. To change the background color, choose **File Tab > Settings > Options**; the **Solid Edge Options** dialog box will be displayed. Choose the **Colors** tab from this dialog box to display various colors, as shown in Figure 1-23.

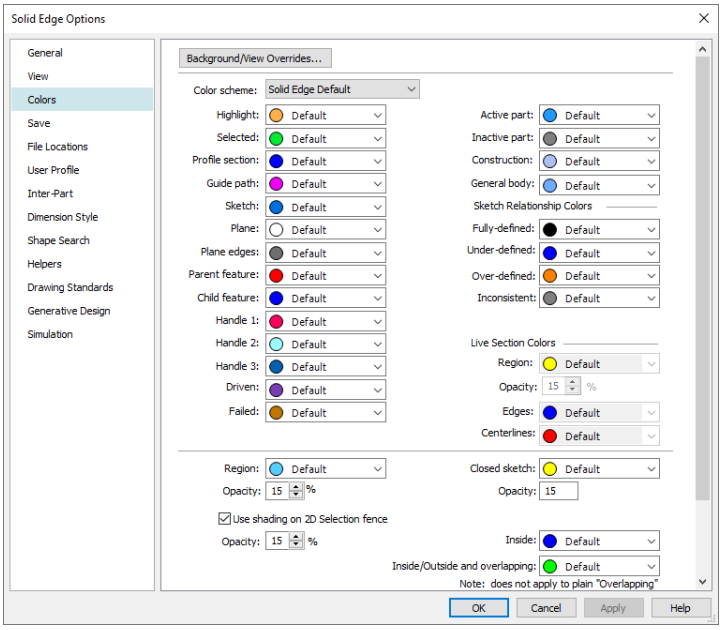

Figure 1-23 *The **Colors** tab of the **Solid Edge Options** dialog box*

To change the background color, choose the **Background/View Overrides** button from the dialog box; the **View Overrides** dialog box will be displayed with the **Background** tab chosen, as shown in Figure 1-24. Select the **White** color from the drop-down list; the background color will change to white. Next, choose the **OK** button from the **View Overrides** dialog box and then from the **Solid Edge Options** dialog box.

Evaluation Copy. Do not reproduce. For information visit www.cadcim.com

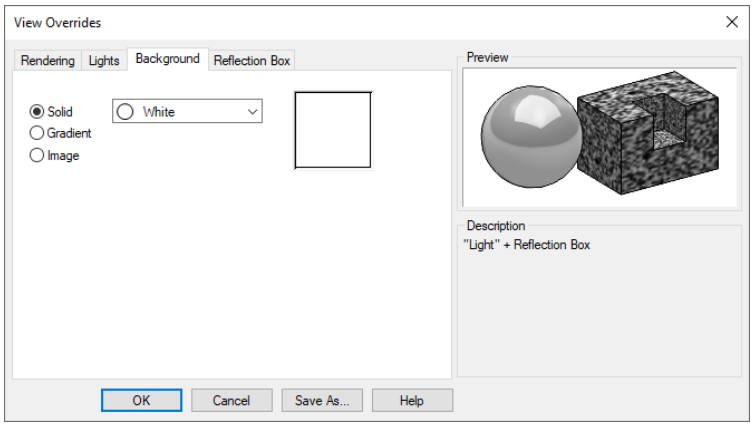

Figure 1-24 *The* ***View Overrides*** *dialog box*

To set the background color to default, invoke the **View Overrides** dialog box from the **Solid Edge Options** dialog box or you can also invoke the **View Overrides** dialog box by choosing the **View Overrides** tool from the **Style** group of the **View** tab; the **View Overrides** dialog box will be displayed. Choose the **Background** tab and select **Default** from the Color 1 drop-down list. Choose the **OK** button to exit this dialog box; the background color will change to default color.

Evaluation Copy. Do not reproduce. For information visit www.cadcim.com

Self-Evaluation Test

Answer the following questions and then compare them to those given at the end of this chapter:

1. The _____ dialog box is used to change the background color of the drawing window in Solid Edge.

2. The _____ relation forces two selected arcs, circles, a point and an arc, a point and a circle, or an arc and a circle to share the same center point.

3. The _____ relation is used to make two points, a point and a line, or a point and an arc coincident.

4. The _____ relation forces two selected lines to become equal in length.

5. The _____ lists all occurrences of features and sketches of a model in a chronological sequence.

6. The _____ relationship is used between two or more components to fix them such that they become rigid with respect to each other.

7. The **Ordered Part** environment of Solid Edge is a feature-based parametric environment in which you can create solid models. (T/F)

8. Any solid model created in Solid Edge is an integration of a number of features. (T/F)

9. The welcome screen of Solid Edge displays the link for step-by-step tutorials in the **Learn Solid Edge** area. (T/F)

10. In Solid Edge, the solid models that are not created by integrating a number of building blocks are called features. (T/F)

Evaluation Copy. Do not reproduce. For information visit www.cadcim.com

Answers to Self-Evaluation Test

1. View Overrides, **2.** Concentric, **3.** Coincident, **4.** Equal, **5.** PathFinder, **6.** Rigid Set, **7.** T, **8.** T, **9.** T, **10.** F

Evaluation Copy. Do not reproduce. For information visit www.cadcim.com