Project 4

Pneumatic Gripper Assembly

In this project, you will create components for a Pneumatic gripper assembly and then assemble them. You need to create all the components as separate part files. The views and dimensions of the components are shown in Figures P4-3 through P4-10.

You can also download the model files for your reference from *www.cadcim.com*. To download the files, use the following path: *Textbooks > CAD/CAM > SOLIDWORKS > SOLIDWORKS 2022 for Designers > Projects for Free Download > Project 4*

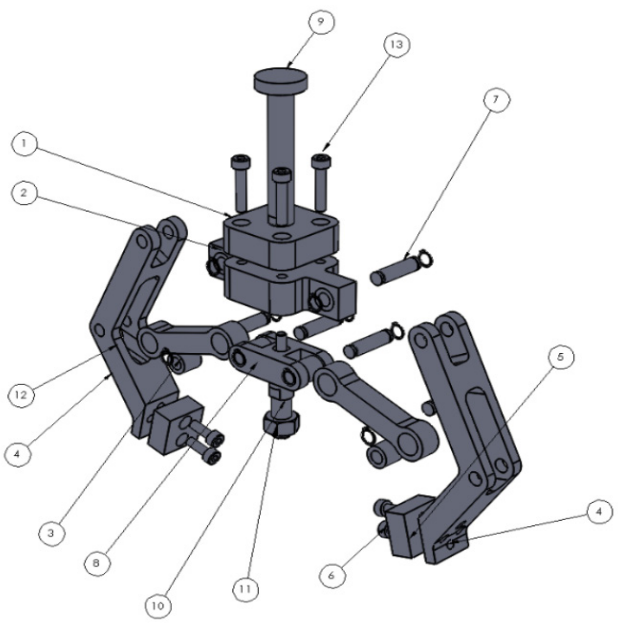

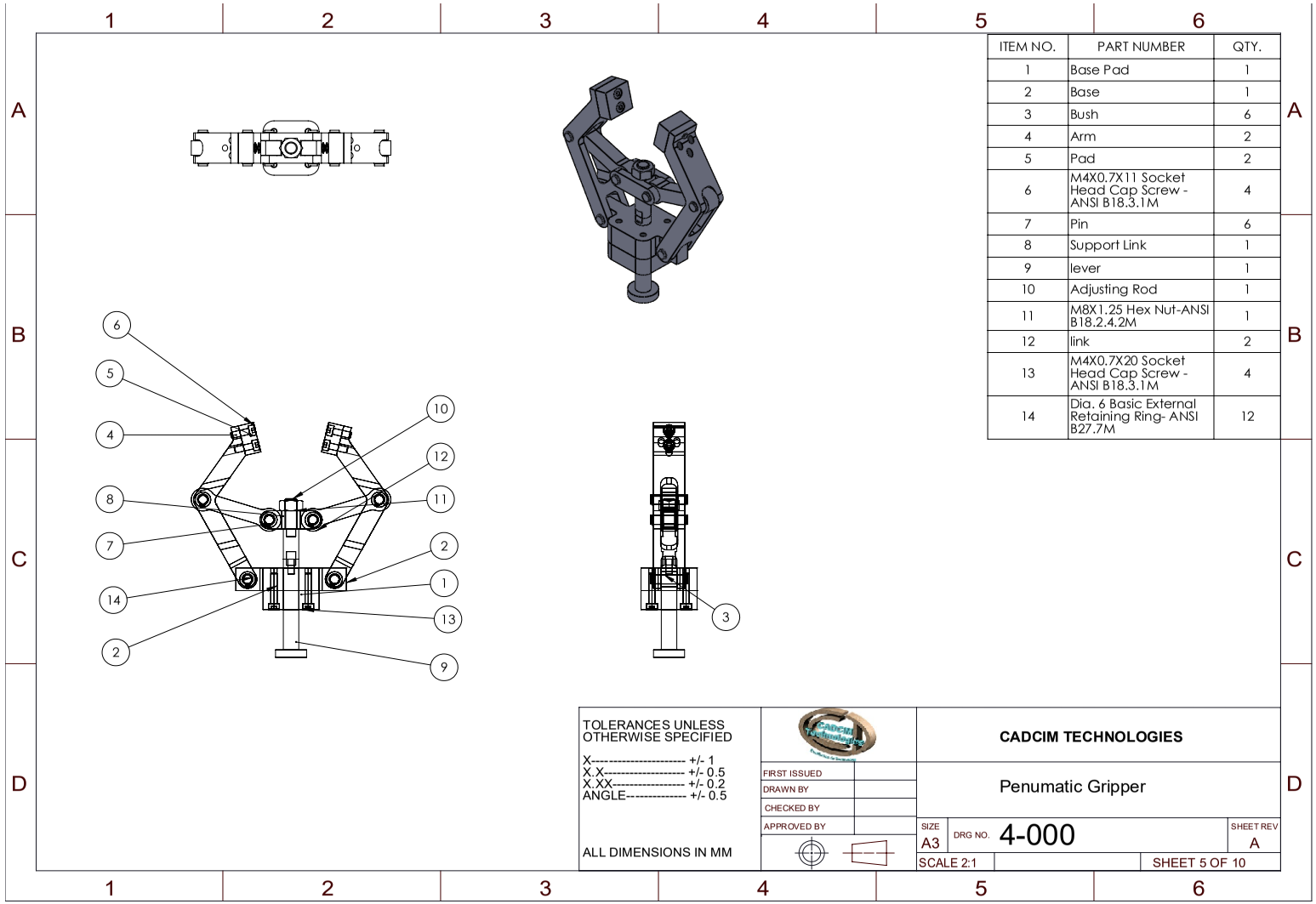

Figure P4-1 *The Pneumatic Gripper assembly*

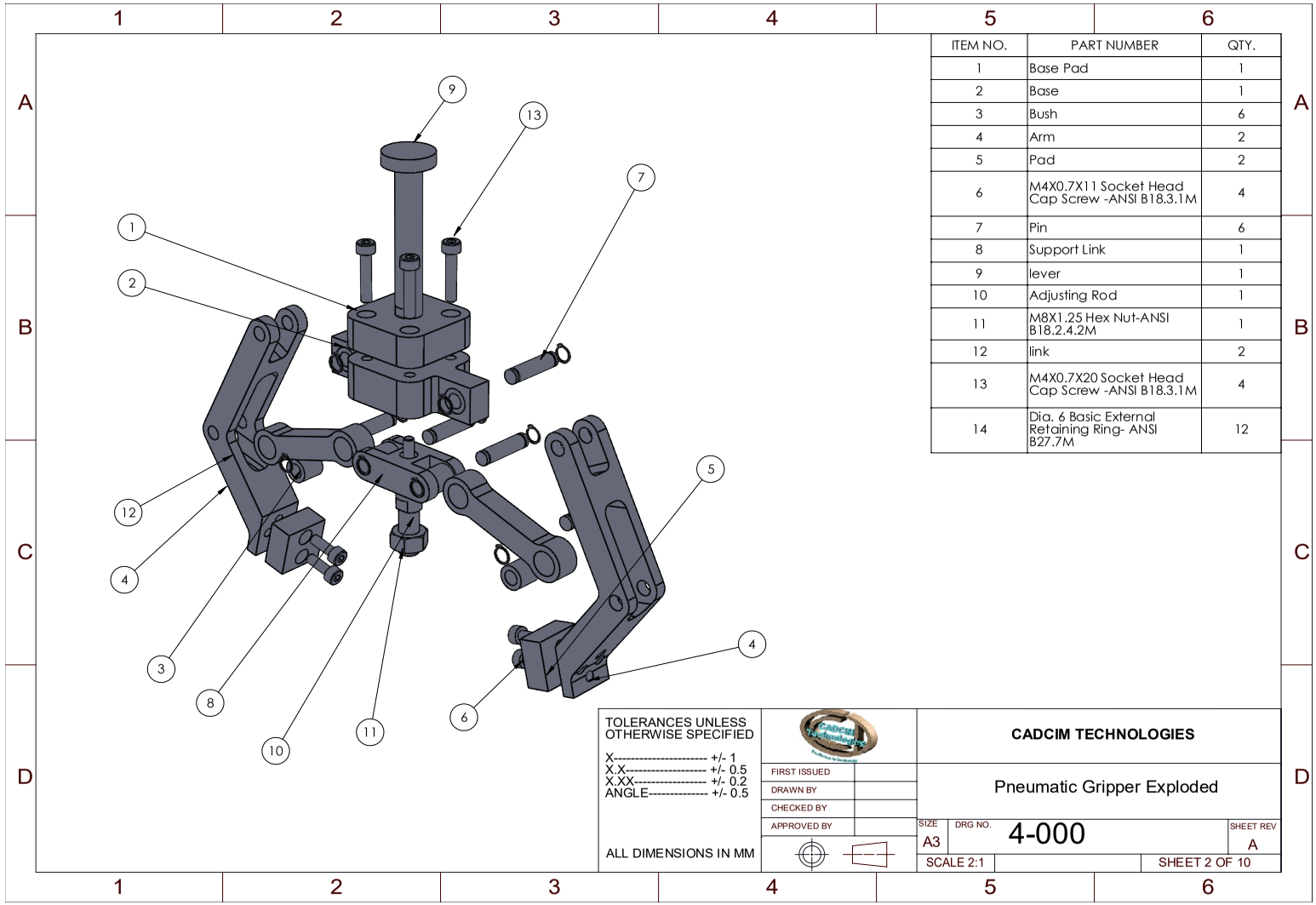

Figure P4-2 *The exploded view of Pneumatic Gripper assembly*

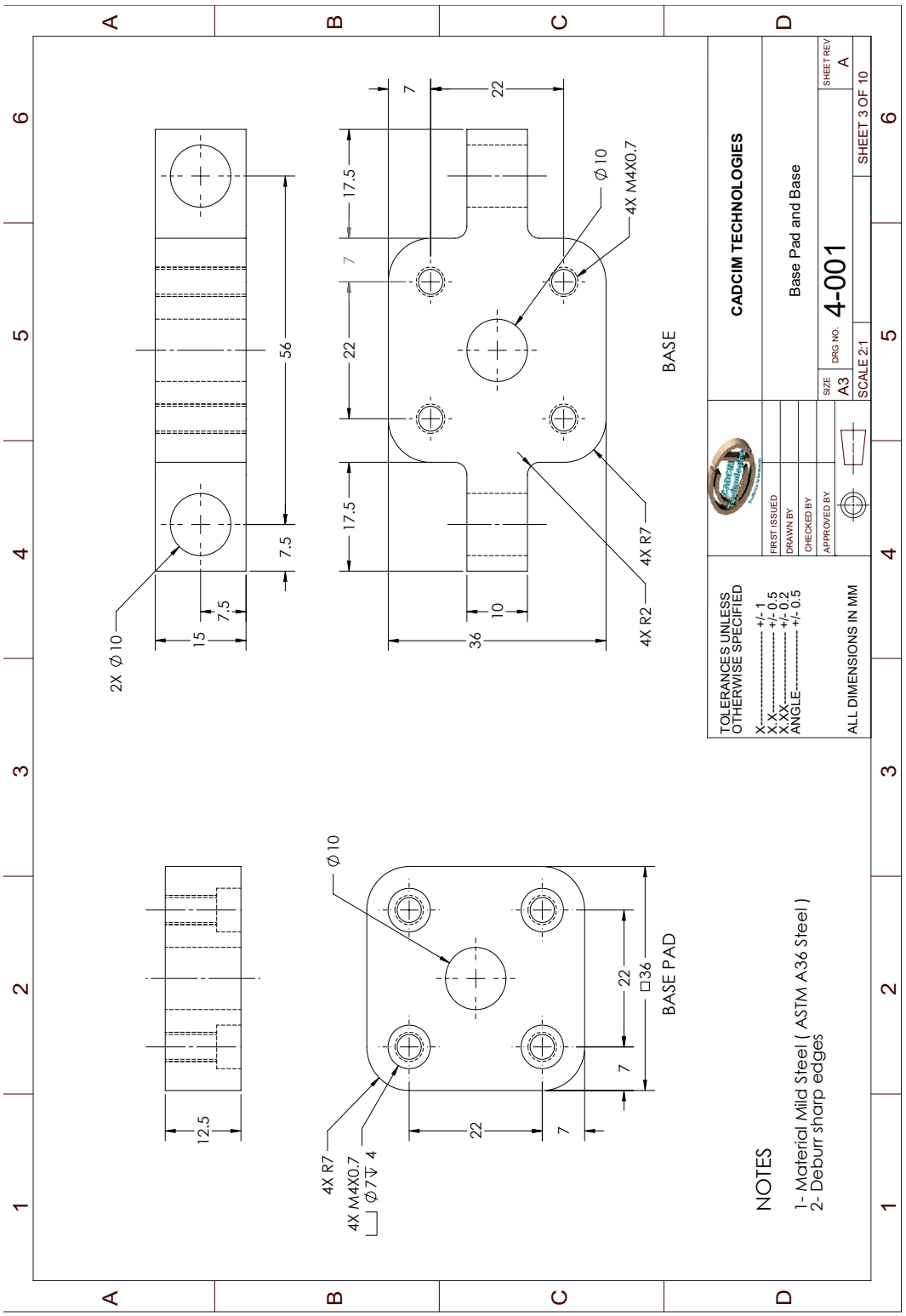

Figure P4-3 *Views and dimensions of Base Plate and Base*

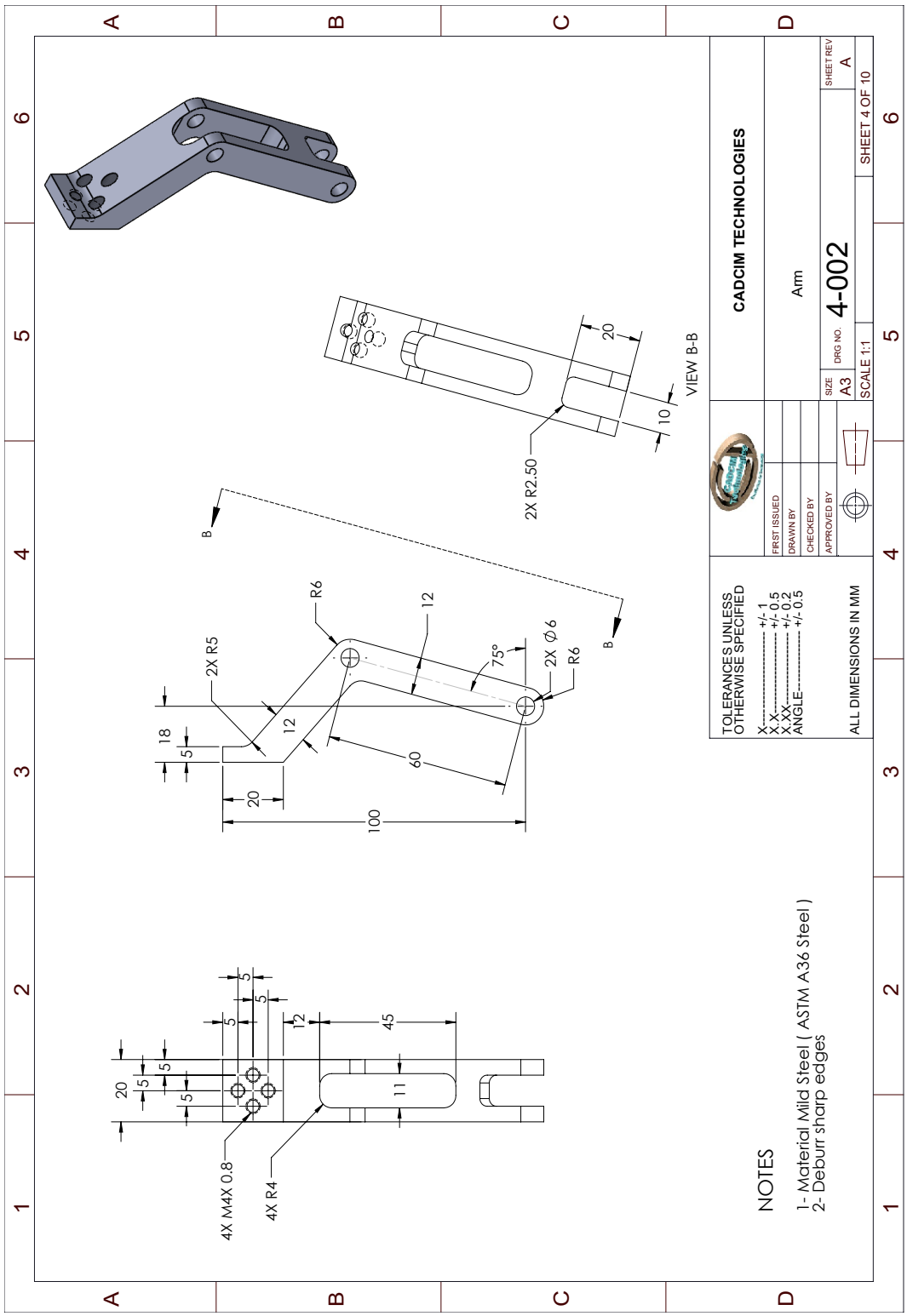

Figure P4-4 *Views and dimensions of Arm*

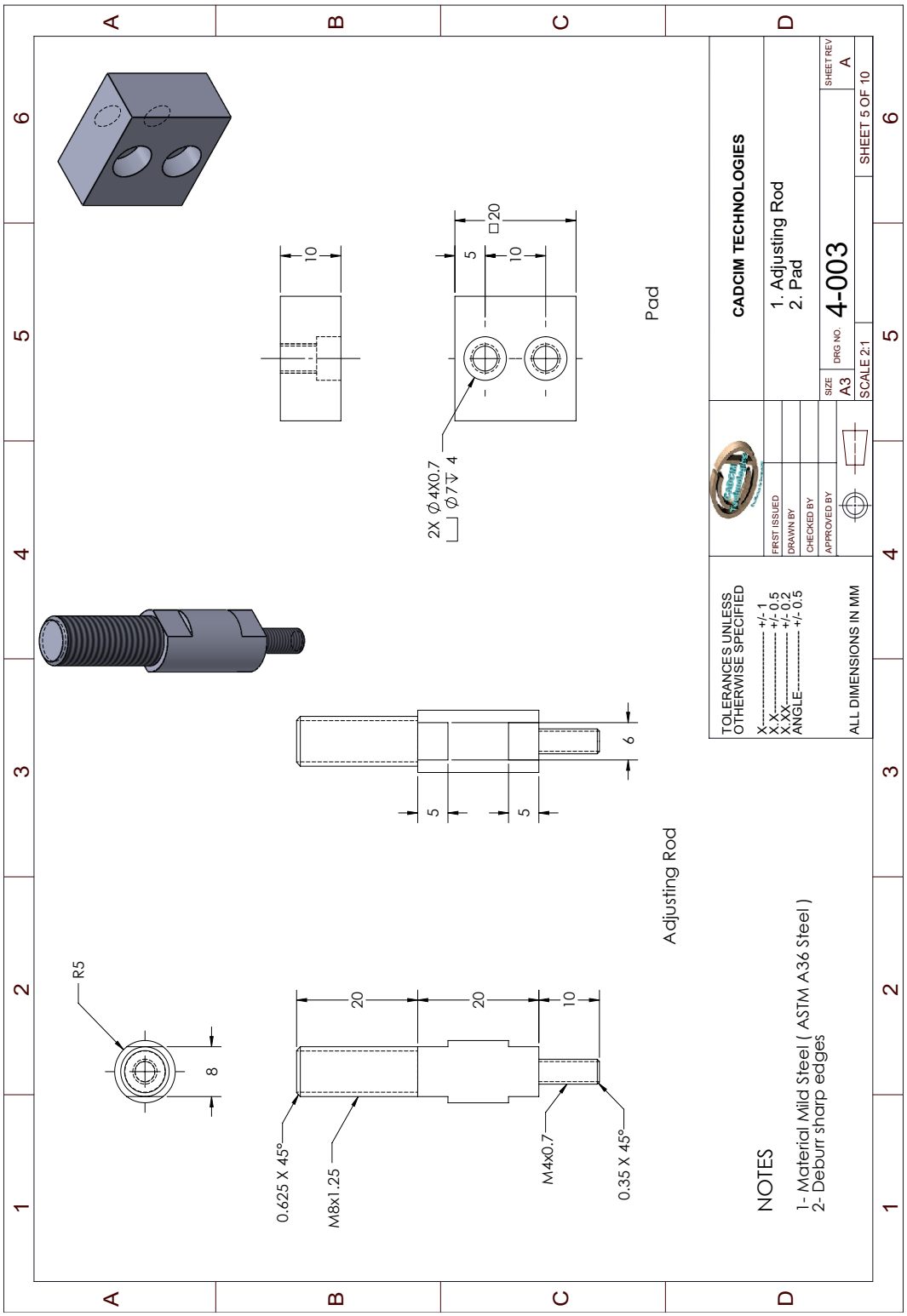

Figure P4-5 *Views and dimensions of Adjusting Rod and Pad*

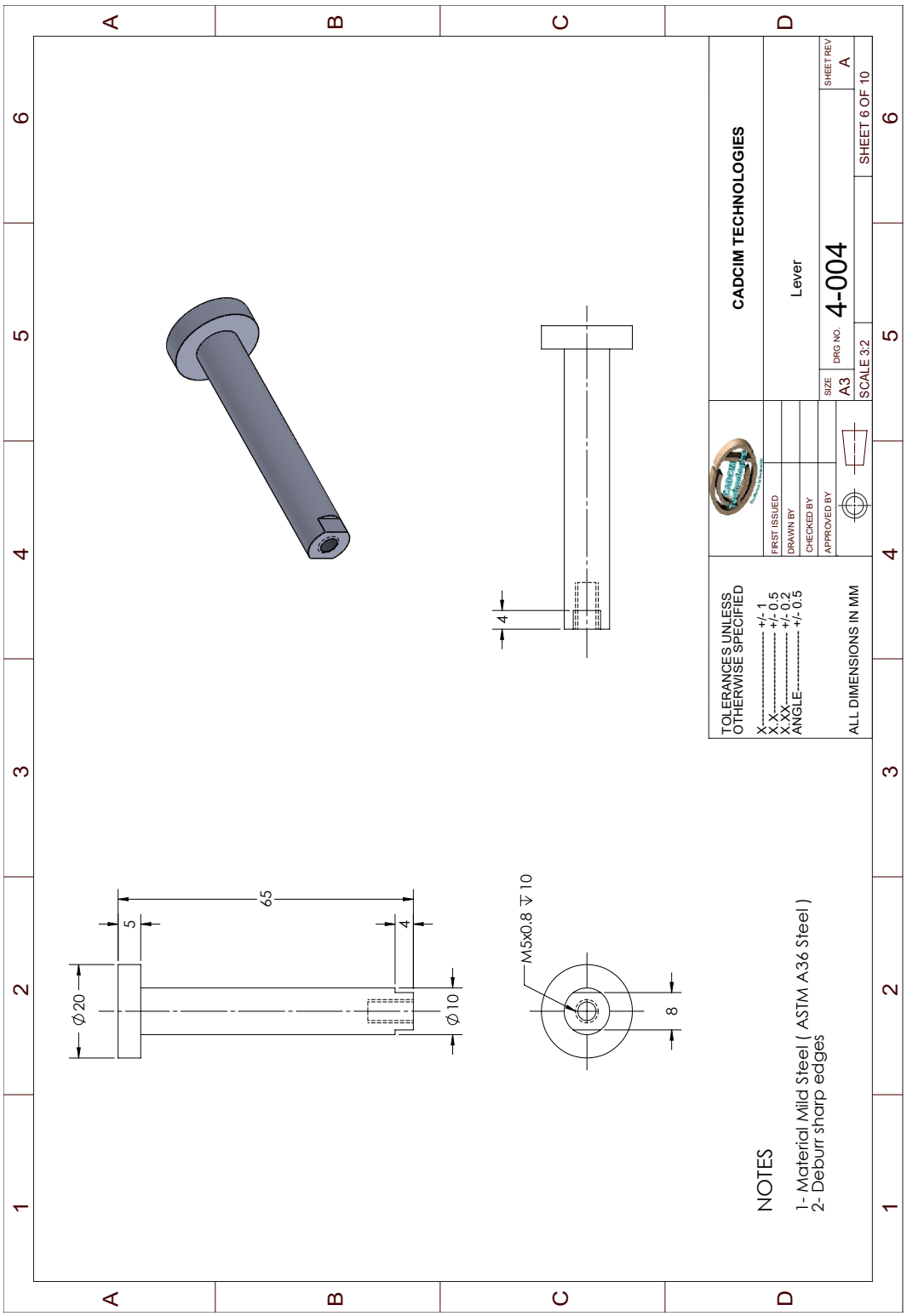

Figure P4-6 *Views and dimensions of Lever*

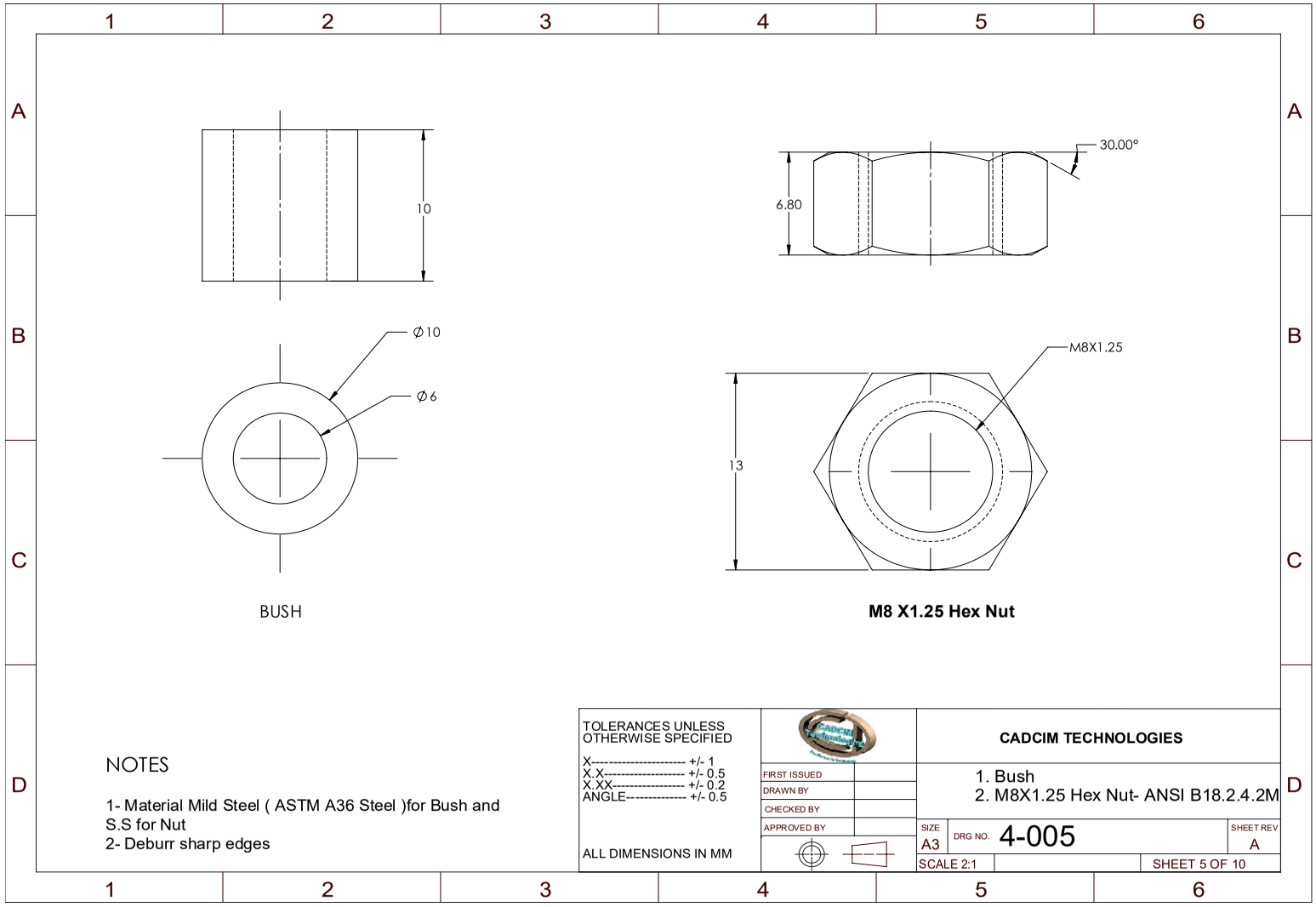

Figure P4-7 *Views and dimensions of Bush and Nut*

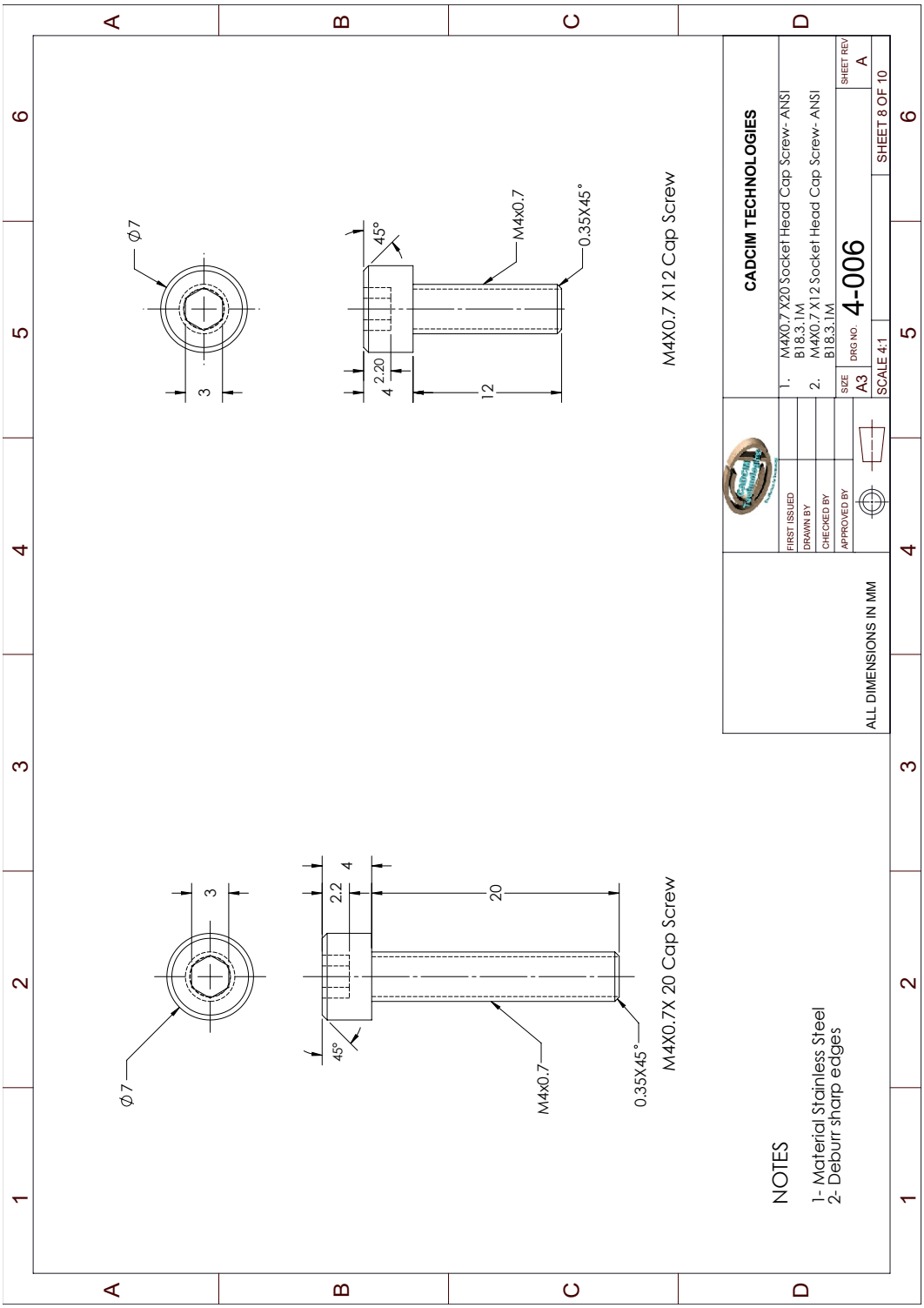

Figure P4-8 *Views and dimensions of Cap Screws*

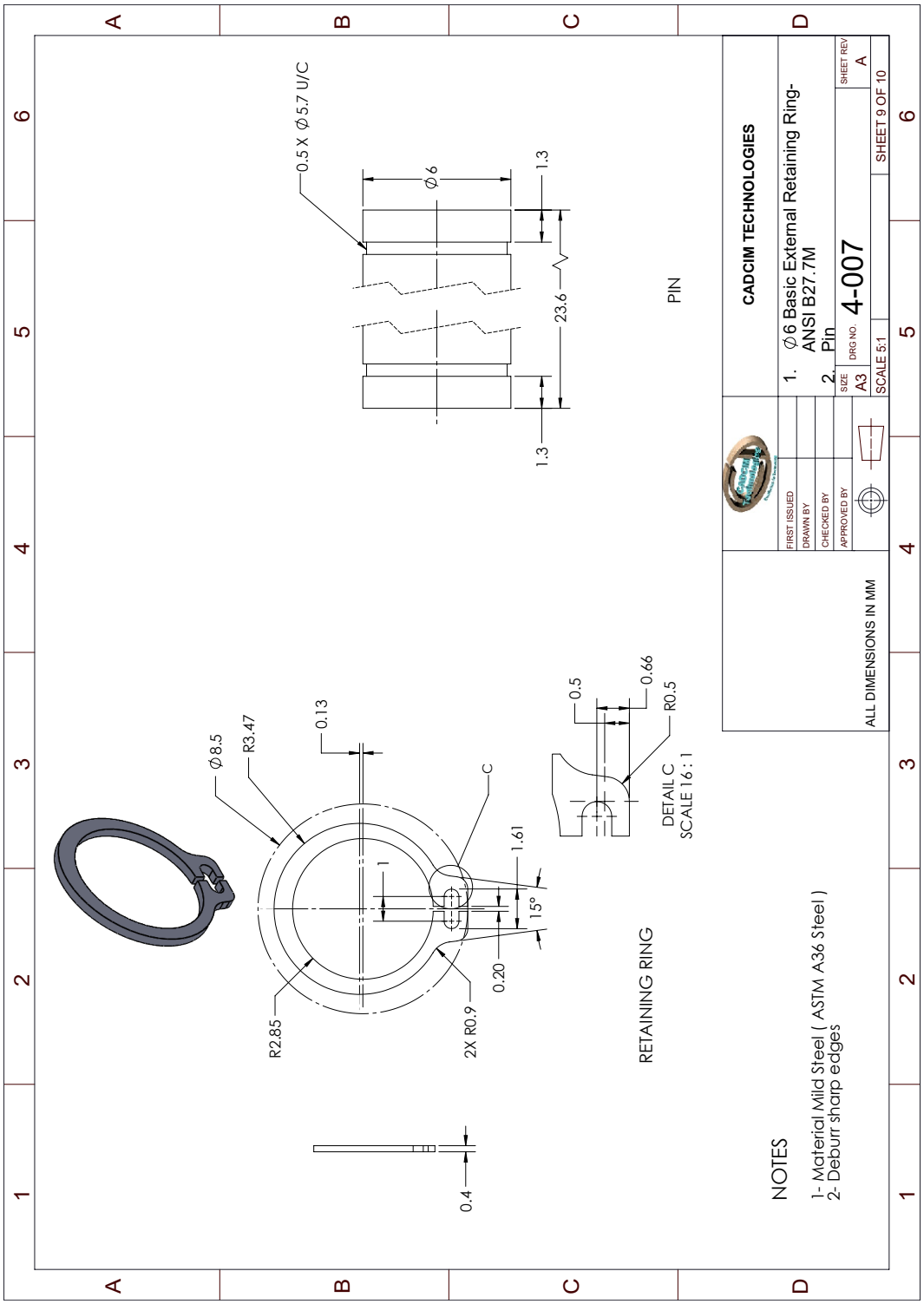

Figure P4-9 *Views and dimensions of Retaining Ring and Pin*

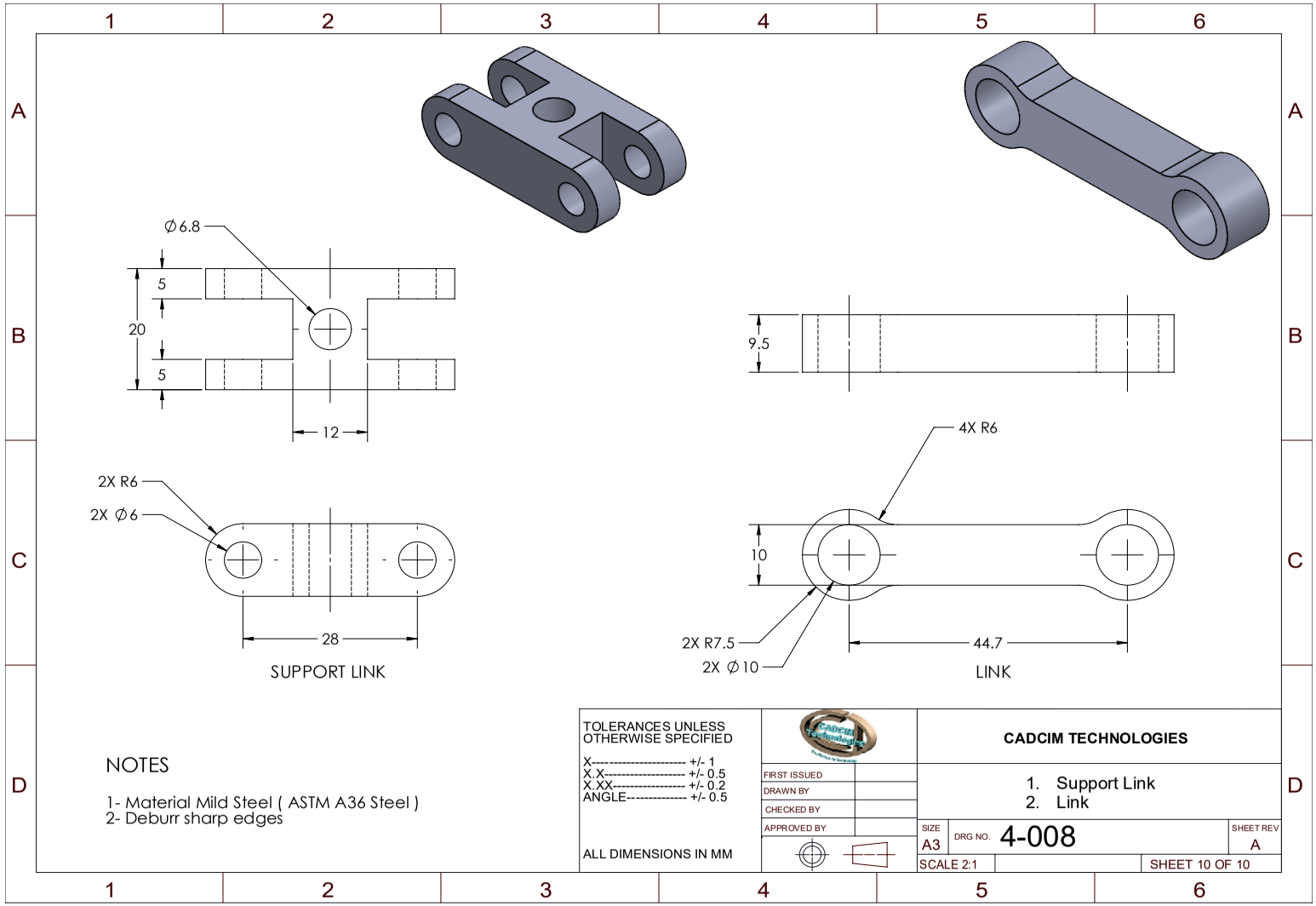

Figure P4-10 *Views and dimensions of Support Link and Link*

This page is intentionally left blank