Project 2

Wheel Assembly

In this project, you will create components for a Wheel assembly and then assemble them. You need to create all the components as separate part files. The views and dimensions of the components are shown in Figures P2-2 through P2-5.

You can also download the model files for your reference from *www.cadcim.com*. To download the files, use the following path: *Textbooks > CAD/CAM > SOLIDWORKS > SOLIDWORKS 2022 for Designers> Projects for Free Download > Project 2*

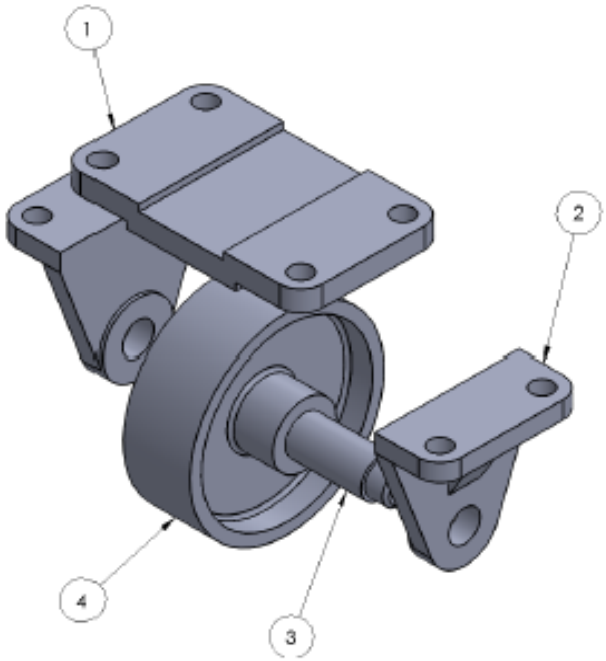

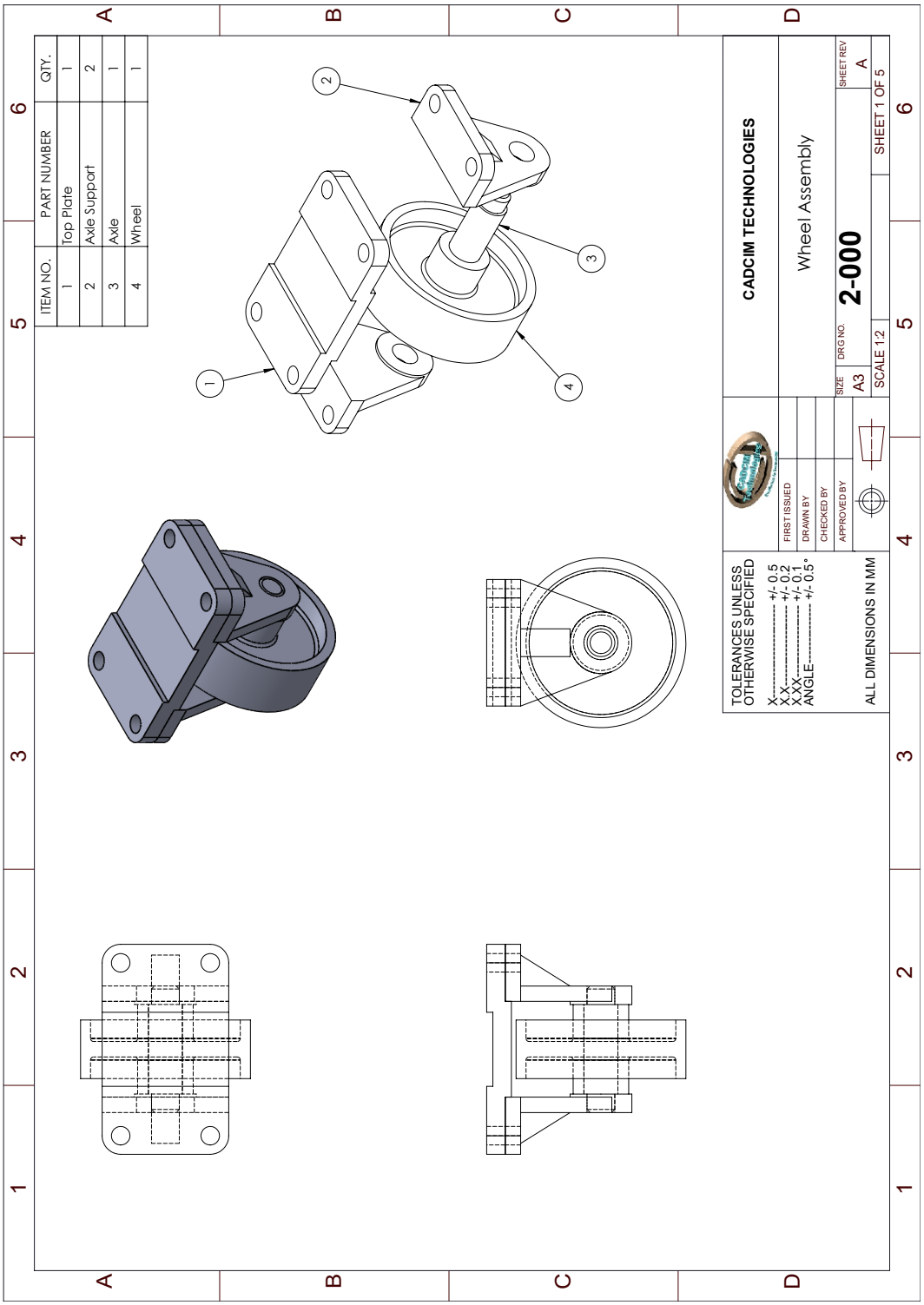

Figure P2-1 *The Wheel assembly*

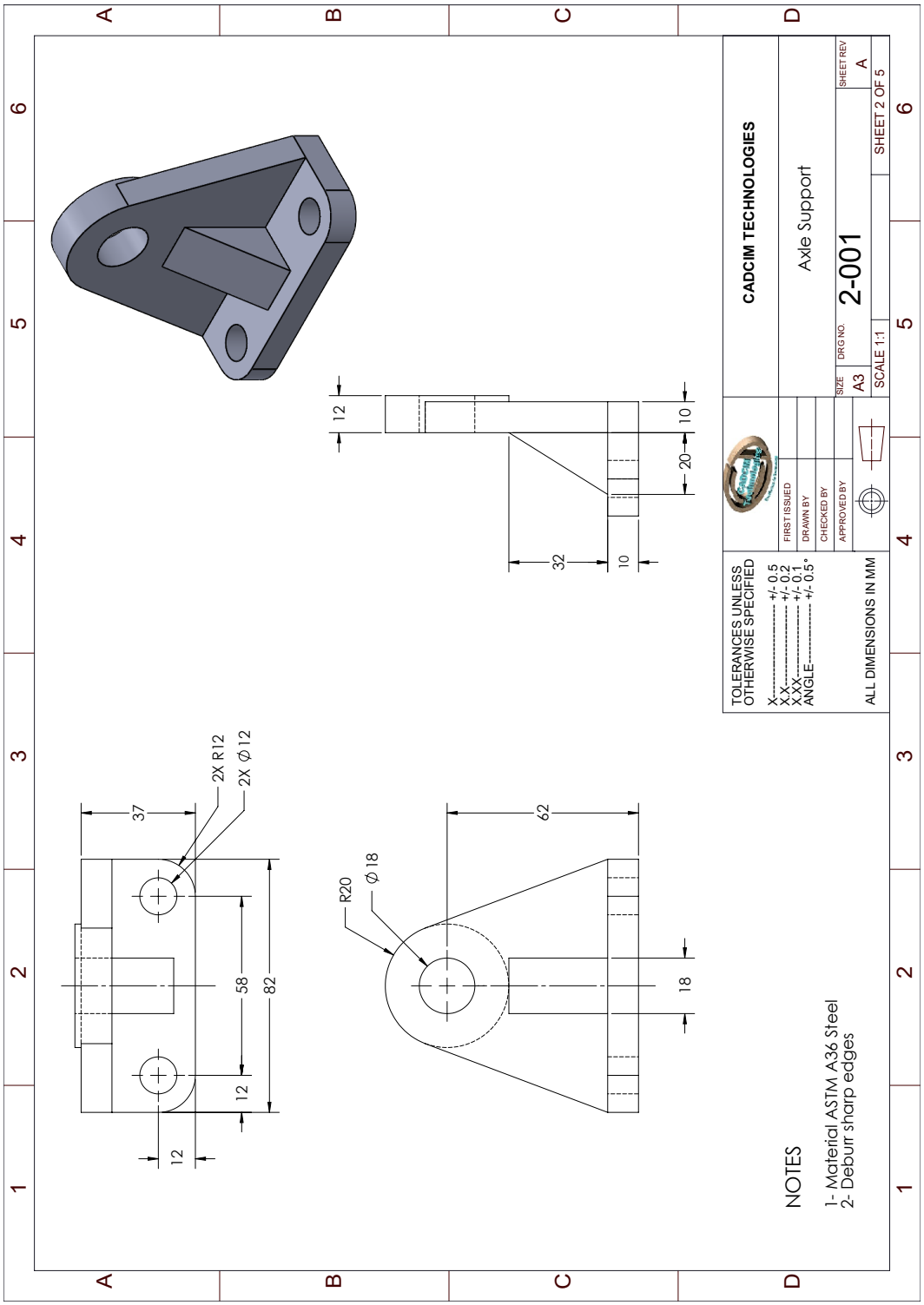

Figure P2-2 *Views and dimensions of Axle Support*

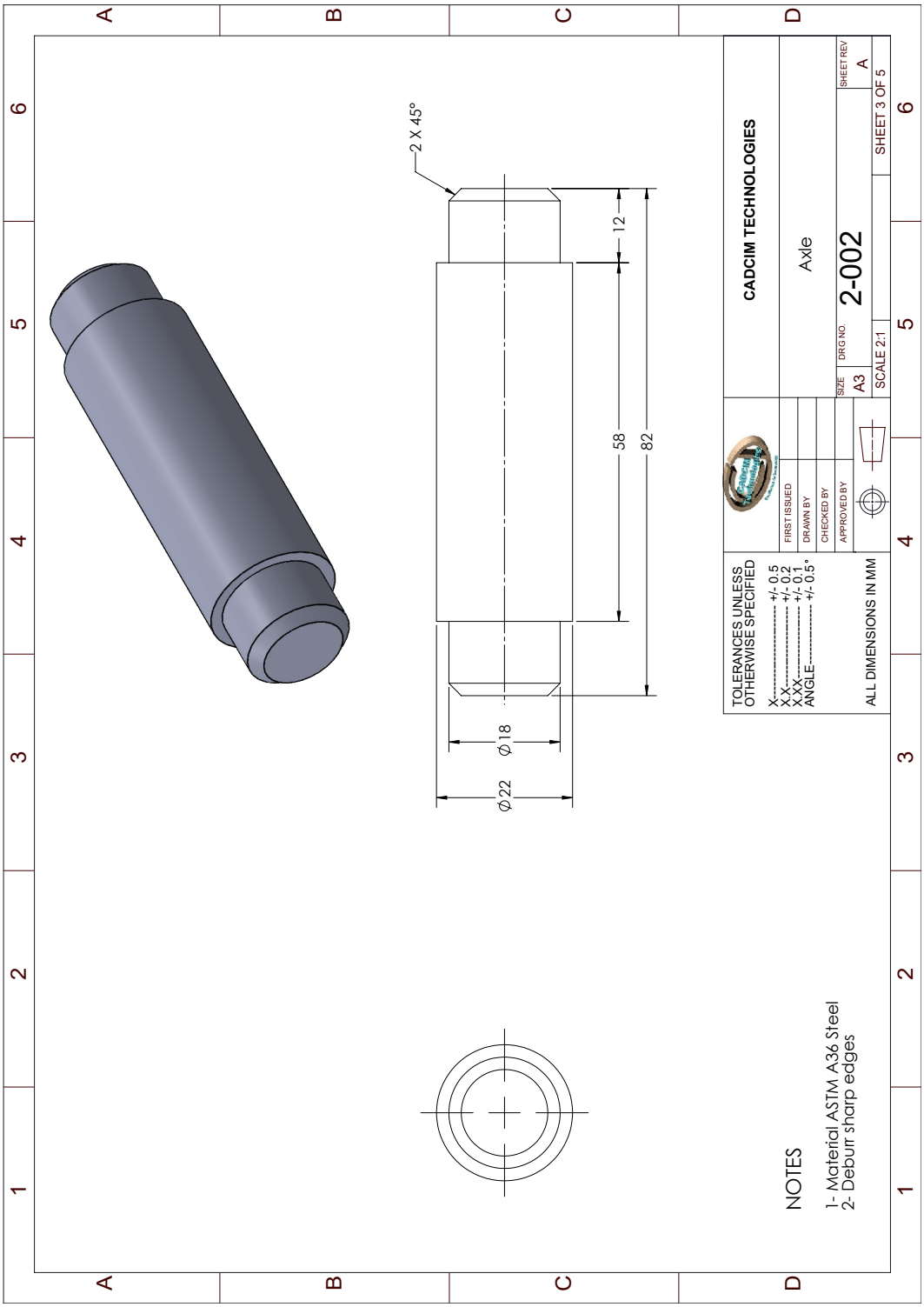

Figure P2-3 *Views and dimensions of Axle*

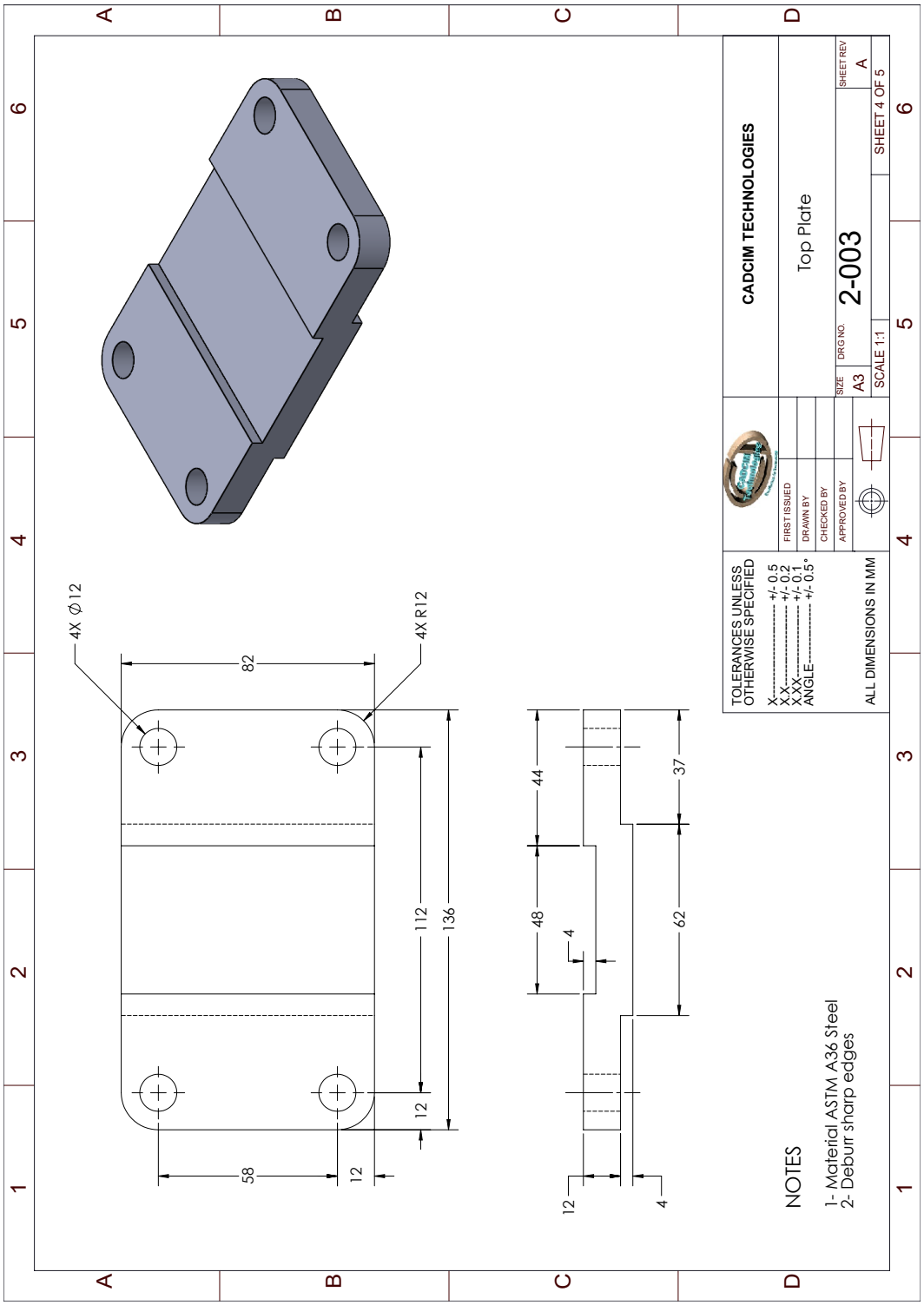

Figure P2-4 *Views and dimensions of Top Plate*

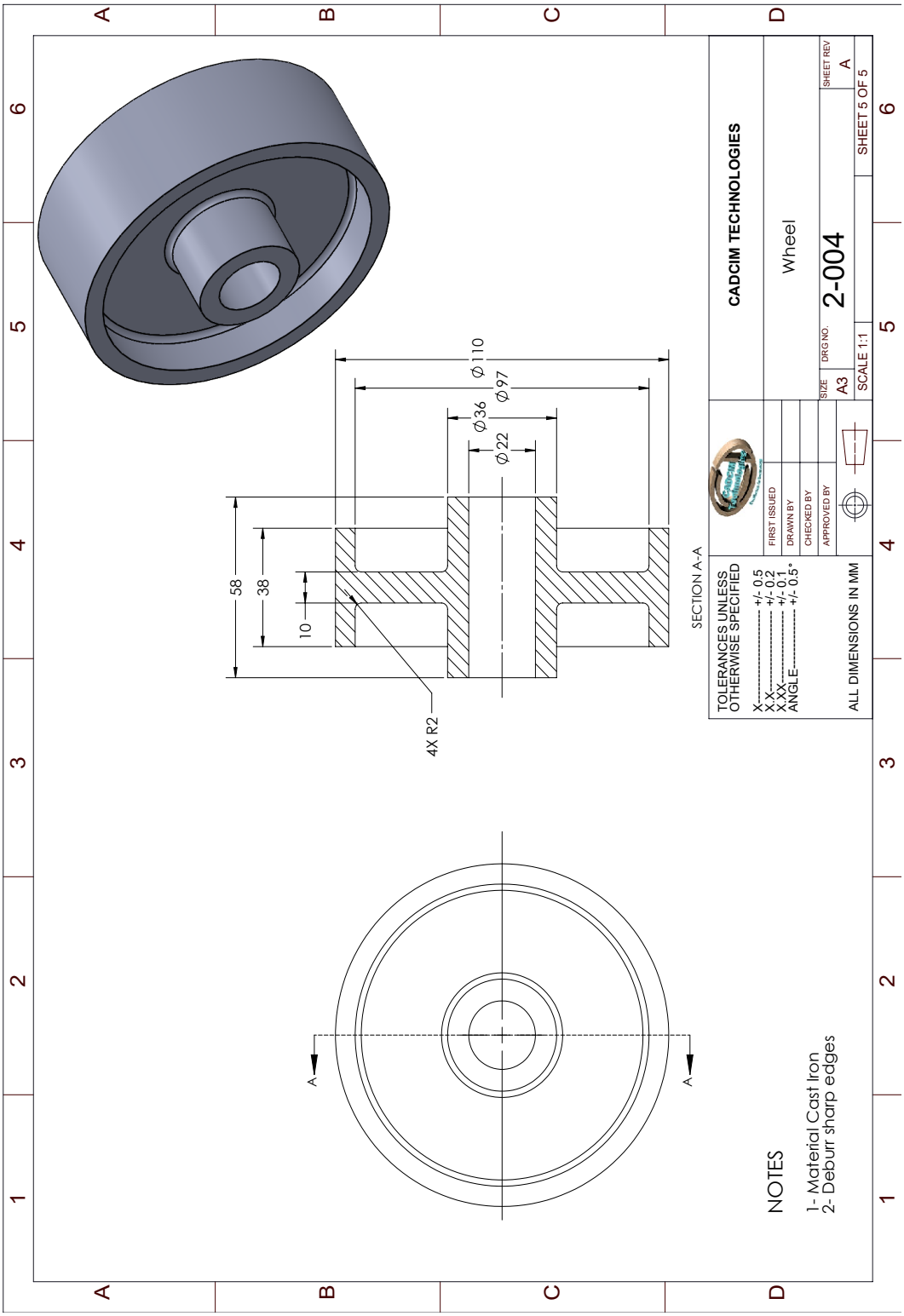

Figure P2-5 *Views and dimensions of Wheel*