Project 1

Car Jack Assembly

In this project, you will create components for a Car Jack assembly and then assemble them, refer to Figure P1-1. An exploded view of the assembly is shown in Figure P1-2. You need to create all the components as separate part files. The views and dimensions of the components are shown in Figures P1-3 through P1-18. **(Expected time: 3 hr 30 min)**

You can also download the model files for your reference from *www.cadcim.com*. To download the files, use the following path: *Textbooks > CAD/CAM > SOLIDWORKS > SOLIDWORKS 2022 for Designers> Projects for Free Download > Project 1*

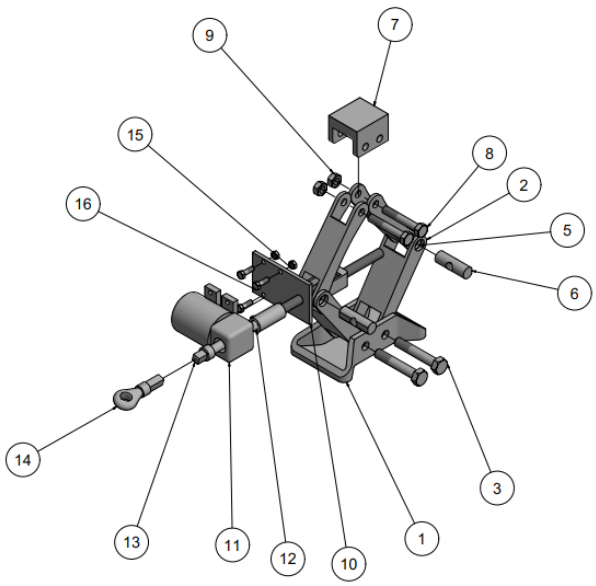

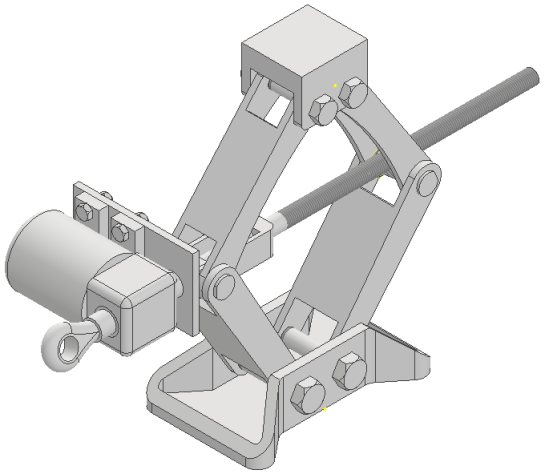

Figure P1-1 *The Car Jack assembly*

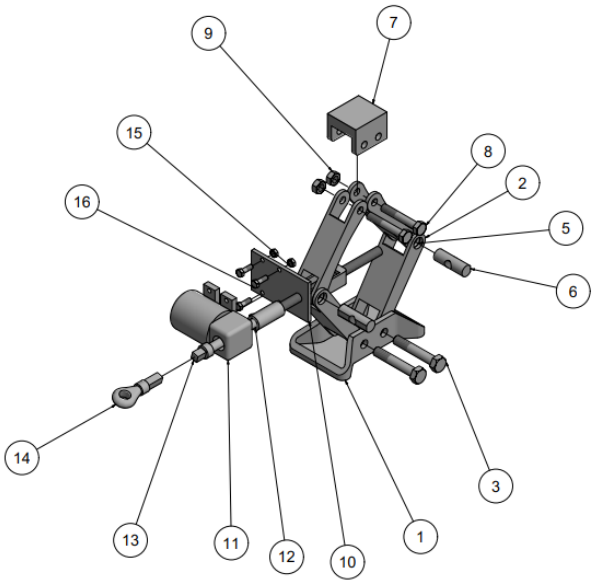

PARTS LIST		
ITEM	PART NUMBER	QTY
1	Jack Base	1
2	Jack Bottom leg	2
3	M12X1.75 Hex Bolt	2
4	M12X1.75 Nut	2
5	Jack upper leg	2
6	Jack Pin with thread	2
7	Jack Cap	1
8	M10X1.5 Hex Bolt	2
9	M10X1.5 Nut	2
10	Screw Base	1
11	Jack Motor Case	1
12	Jack Rotor	1
13	Jack Screw	1
14	Manual Screw	1
15	M6X1.0 Nut	4
16	M6X1.0 Hex Bolt	4

Figure P1-2 *The exploded view of Car Jack assembly*

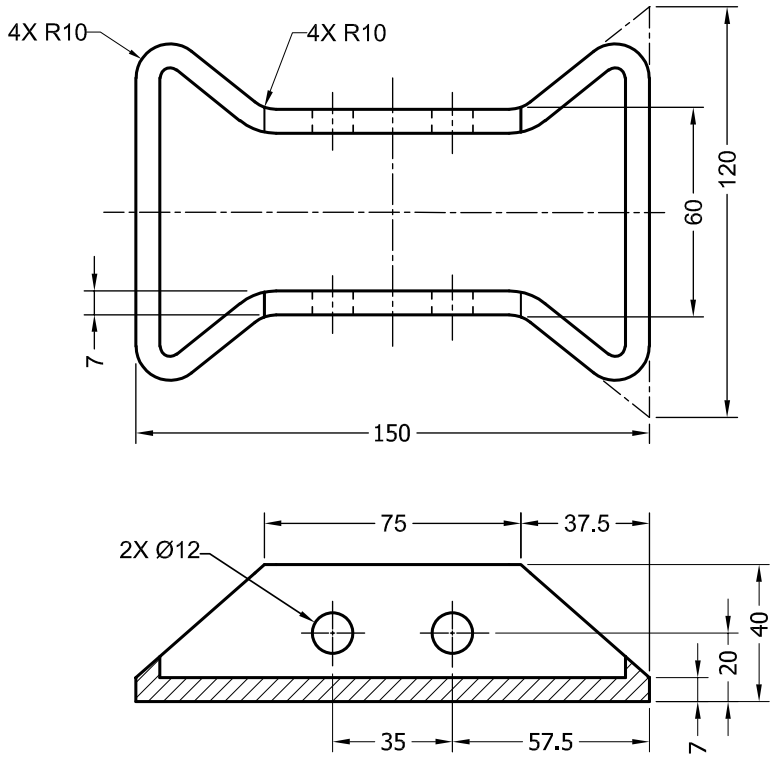

Figure P1-3 *Orthographic views and dimensions of Jack Base*

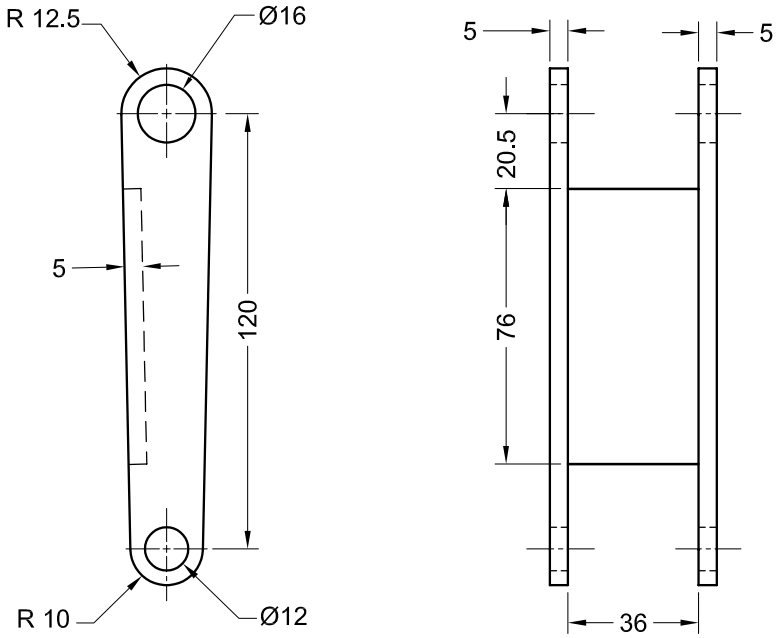

Figure P1-4 *Orthographic views and dimensions of Jack Bottom Leg*

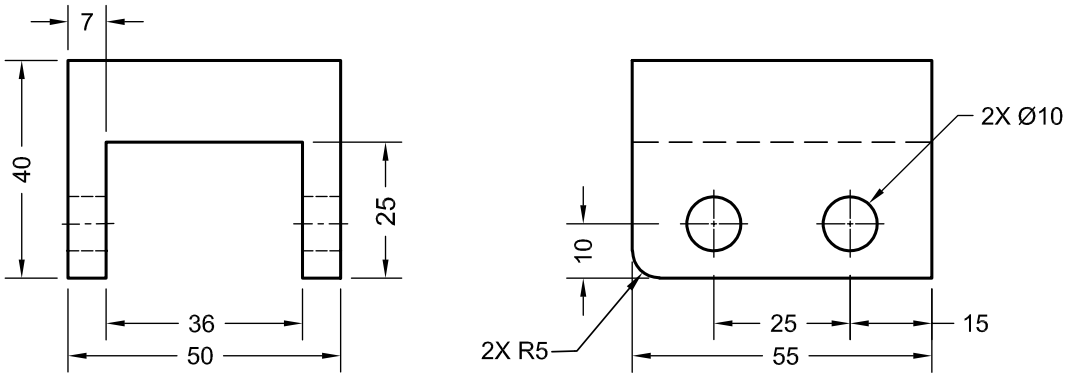

Figure P1-5 *Orthographic views and dimensions of Jack Cap*

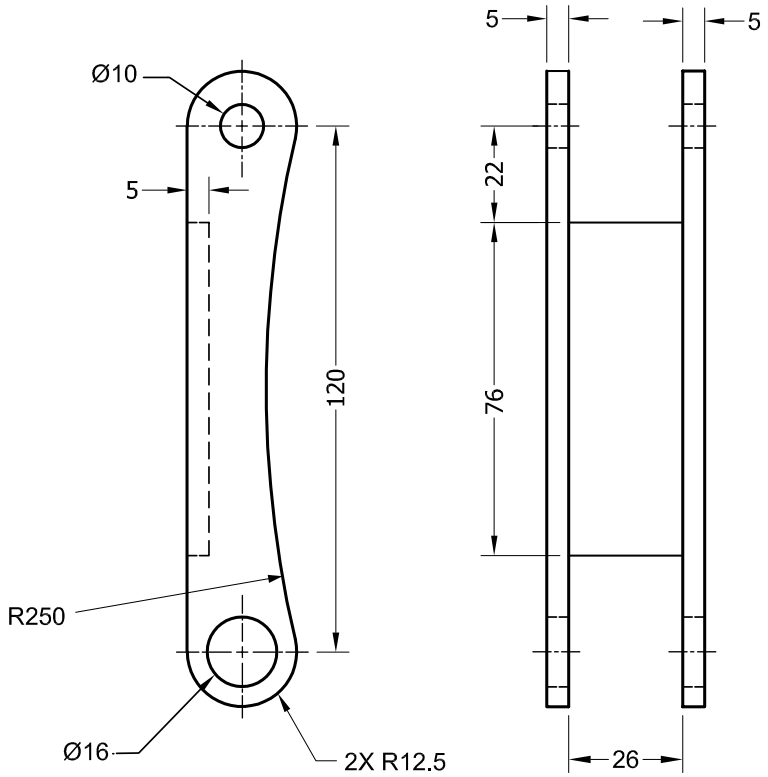

Figure P1-6 *Orthographic views and dimensions of Jack Upper Leg*

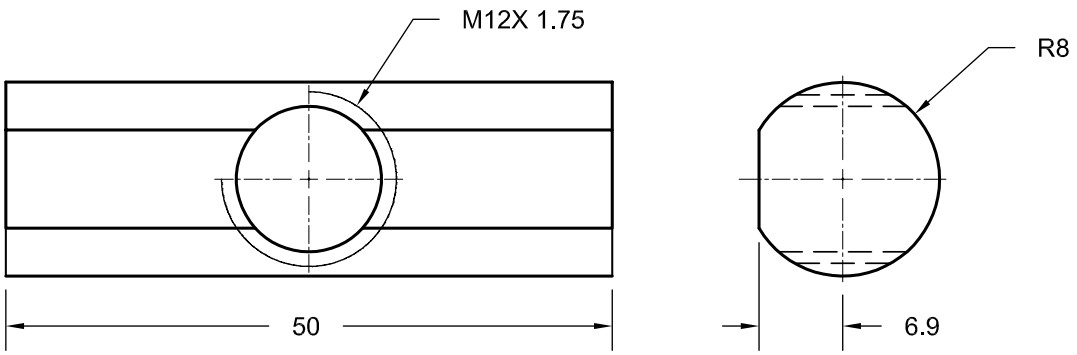

Figure P1-7 *Orthographic views and dimensions of Jack Pin with thread*

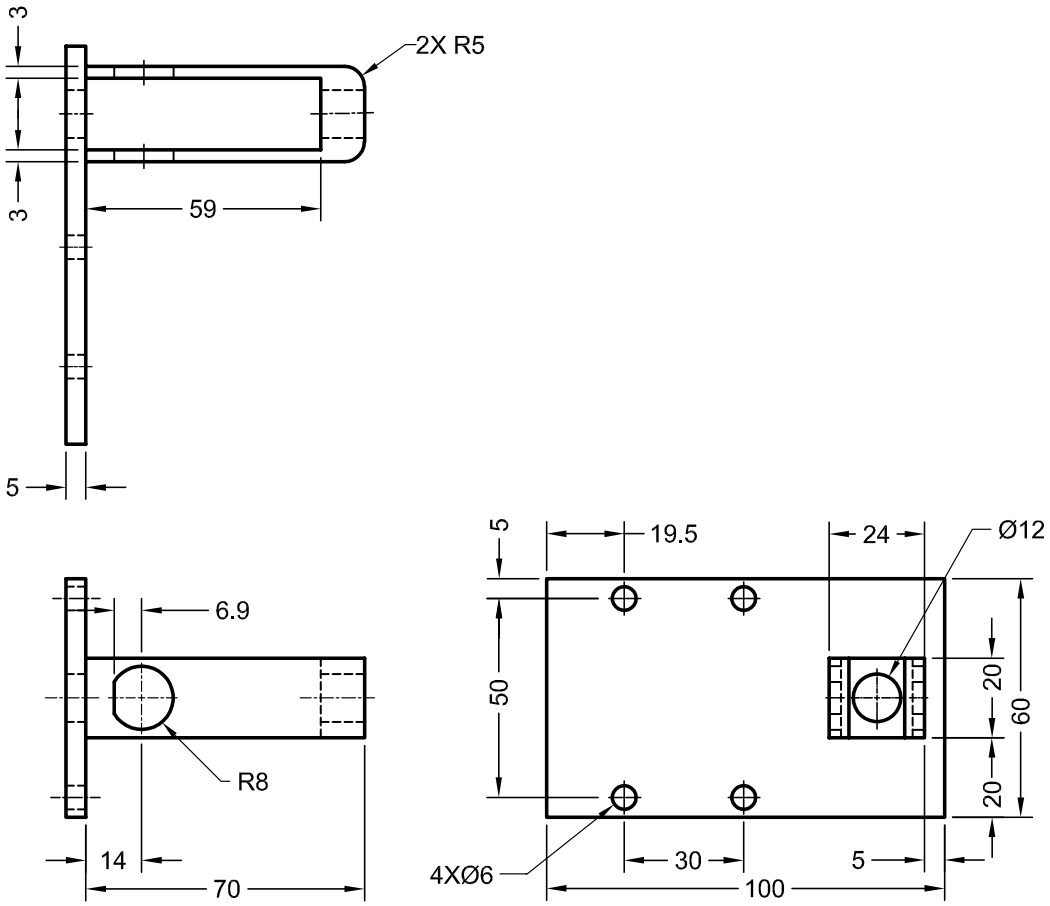

Figure P1-8 *Orthographic views and dimensions of Screw Base*

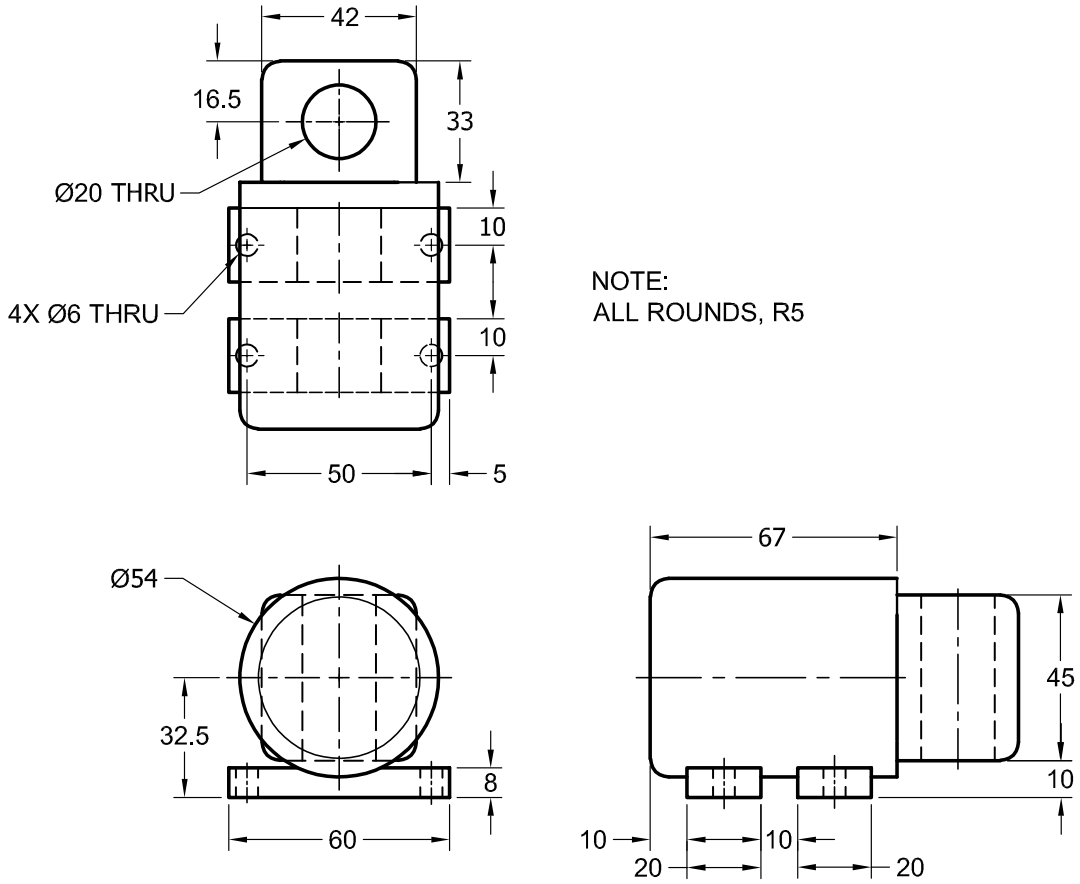

Figure P1-9 *Orthographic views and dimensions of Jack Motor Case*

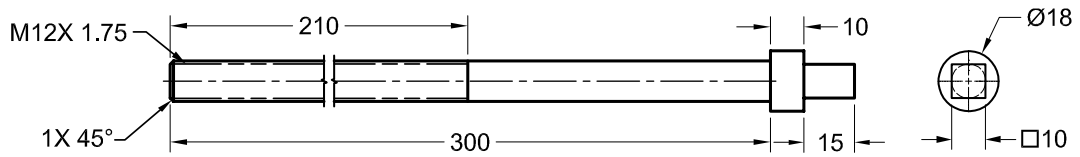

Figure P1-10 *Orthographic views and dimensions of Jack Screw*

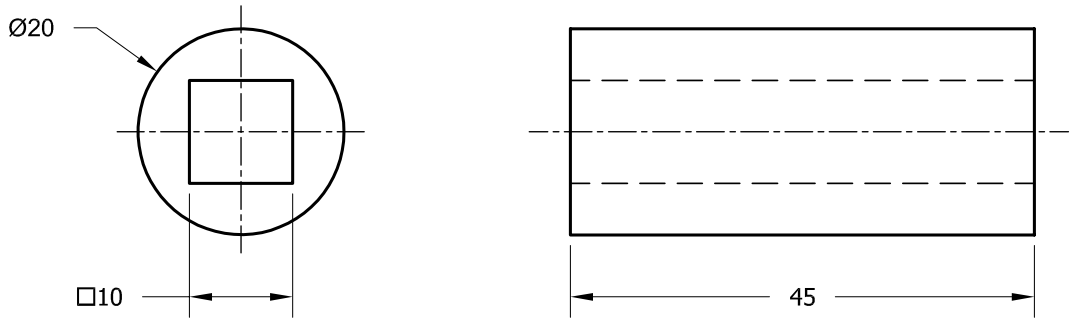

Figure P1-11 *Orthographic views and dimensions of Jack Rotor*

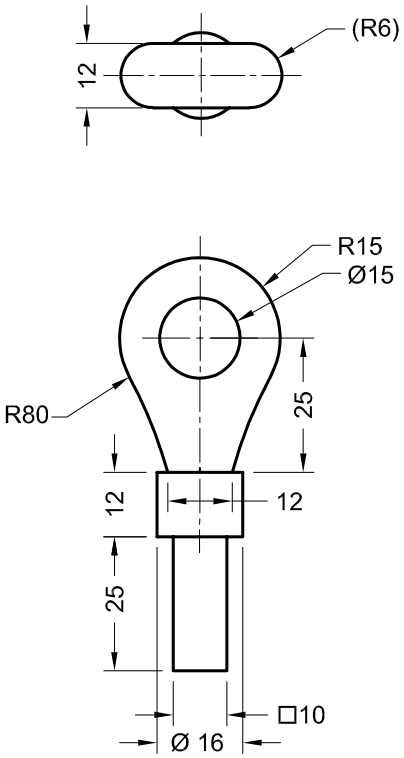

Figure P1-12 *Orthographic views and dimensions of Manual Screw*

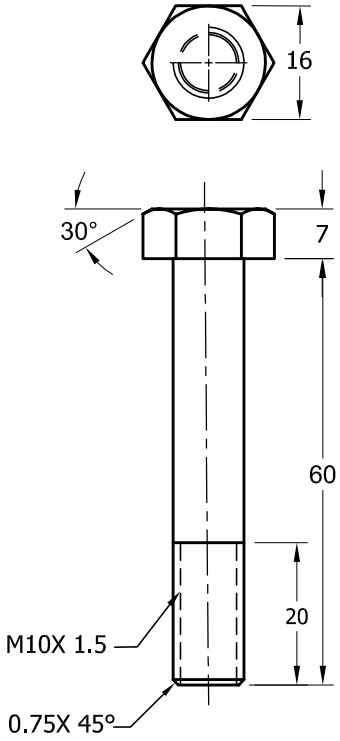

Figure P1-13 *Orthographic views and dimensions of the M10X 1.5 bolt*

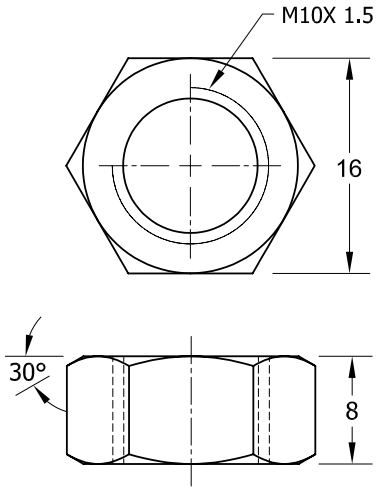

Figure P1-14 *Orthographic views and dimensions of the M10X 1.5 nut*

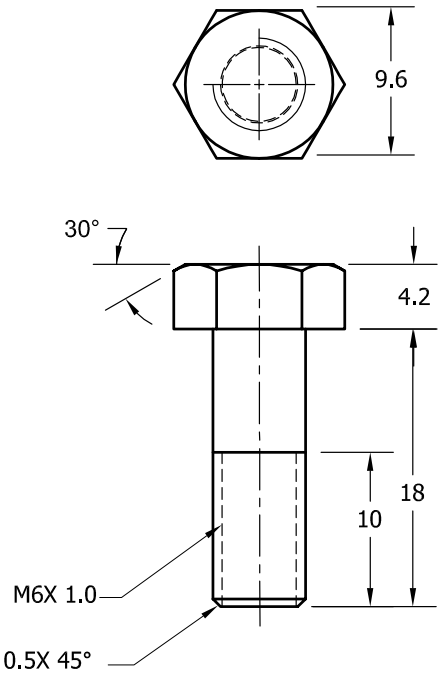

Figure P1-15 *Orthographic views and dimensions of the M6X 1.0 bolt*

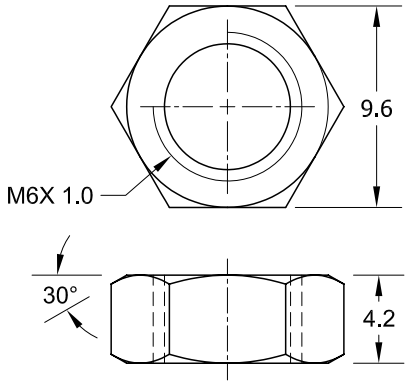

Figure P1-16 *Orthographic views and dimensions of the M6X 1.0 nut*

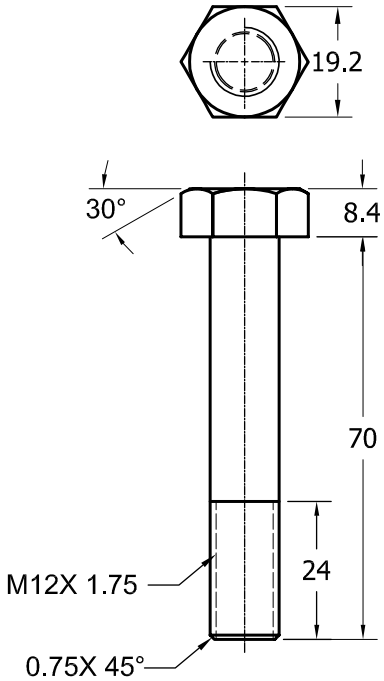

Figure P1-17 *Orthographic views and dimensions of the M12X 1.75 bolt*

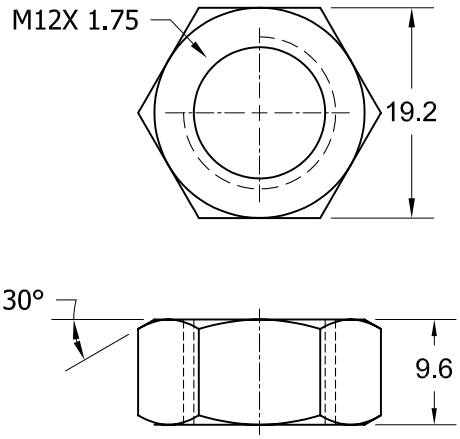

Figure P1-18 *Orthographic views and dimensions of the M12X 1.75 nut*