Chapter 2

Working with Blocks

Learning Objectives

After completing this chapter, you will be able to:

- *Use tools in the Blocks toolbar*
- *Save a sketch as a block in the Design Library*
- *Create mechanisms by using blocks*
- *Create parts from blocks*

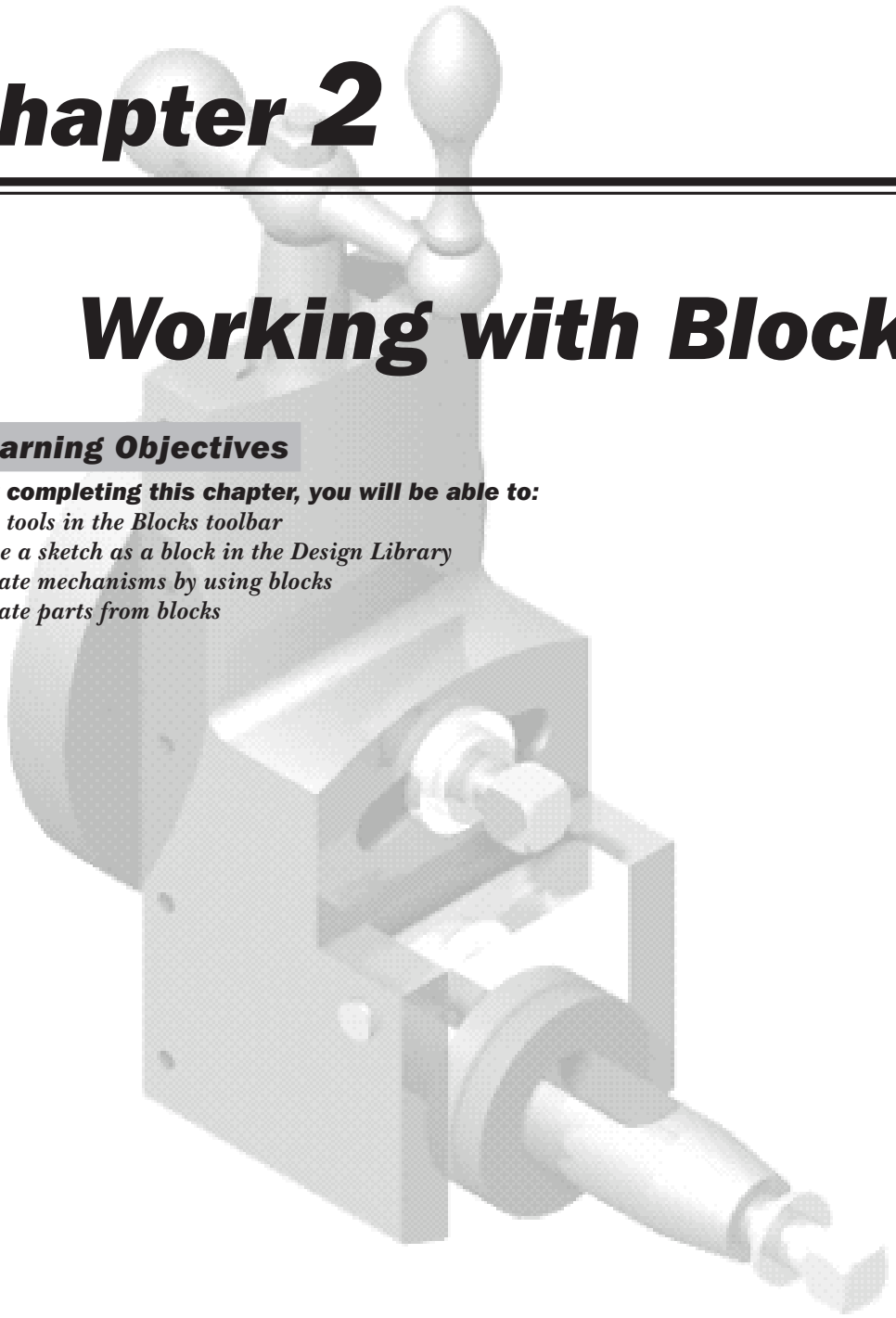

INTRODUCTION TO BLOCKS

A block is a set of entities grouped together as a single entity. The blocks are used to create complex mechanisms using sketches and check their functioning before developing them into a complex 3D model. You can create a block from a single entity or from a combination of multiple sketched entities. To create a block, first you need to draw an object and then convert it into a block by using the tools available in the **Blocks** toolbar. Tools available in this toolbar are also used to perform other operations such as edit, save, explode, rebuild, and so on. You can convert a block into a part in the Layout environment. In this chapter, you will learn to create a part and an assembly from the blocks.

Blocks Toolbar

The **Blocks** toolbar, as shown in Figure 2-1, is used to control the sketched entities of the blocks. You can perform different operations related to blocks such as create, edit, insert, save, and so on by using the **Blocks** toolbar. The tools in this toolbar are discussed next.

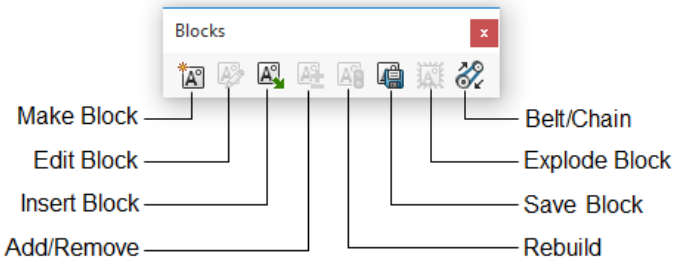

Figure 2-1 *The* ***Blocks*** *toolbar*

Make Block



The **Make Block** tool is used to convert the sketch entities into a block. Using this tool, you can make each entity of a sketch as a separate block that can be moved with respect to one another. In such a case, there will be a motion between the sketched entities. This tool will be available only when you invoke the Sketching environment. To create a block, select an entity from the sketch. Next, choose the **Make Block** button from the **Blocks** toolbar or choose **Tools > Blocks > Make** from the SOLIDWORKS menus; the **Make Block PropertyManager** will be displayed, as shown in Figure 2-2, and the name of the selected entity will be displayed in the selection box of the **Block Entities** rollout. The **Insertion Point** rollout of the **Make Block PropertyManager** is used to specify the location of the insertion point of the resulting block. When you insert a block later in a sketch, the cursor will snap the block at the specified insertion point. To specify the insertion point, expand the **Insertion Point** rollout; a manipulator will be displayed in the drawing area. Drag the manipulator and place it at the location where the insertion point is to be specified. When you move the manipulator to specify the insertion point in the drawing area, it will snap to the sketched entity and relations will be added between the insertion point and the sketched entity. Finally, choose the **OK** button; the sketched entity will be converted into a block. Similarly, convert other entities of the sketch into blocks.

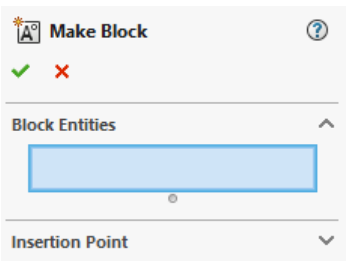

Figure 2-2 *The* ***Make Block PropertyManager***

Evaluation Copy. Do not reproduce. For information visit www.cadcim.com

Note

Although you can convert all entities of a sketch into a block, it is recommended to create each entity of the sketch as a separate block; else, there will be no motion between the sketched entities.

Save Block

The **Save Block** tool is used to save the current sketch as a block. In this case, the motion between the sketched entities will be frozen. To save a sketch as a block, draw a sketch and then save it by choosing the **Save Block** button from the **Blocks** toolbar. Alternatively, choose **Tools > Blocks > Save** from the SOLIDWORKS menus; the sketch will be saved as a block. The file extension of a block file is *.Sldblk* .

Insert Block

The **Insert Block** tool is used to insert the blocks into an active sketch. To insert a block after exiting from an active sketch, choose the **Insert Block** button from the **Blocks** toolbar; the **Edit Sketch PropertyManager** will be displayed, as shown in Figure 2-3. Also, you will be prompted to select a sketching plane or an existing sketch. Select the sketching plane from the drawing area or from the **FeatureManager Design Tree**; the **Insert Block PropertyManager** will be displayed, as shown in Figure 2-4. Note that if you are in the sketching environment, the **Insert Block PropertyManager** will be displayed directly. The options available in this PropertyManager are discussed next.

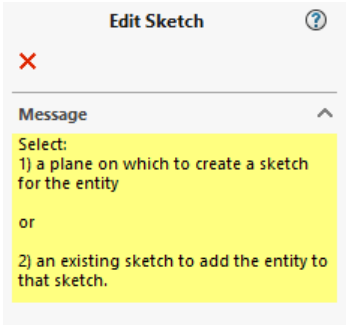

Figure 2-3** The **Edit Sketch PropertyManager

Blocks to Insert

The existing blocks of an active sketch are listed in the **Block List** selection box of the **Blocks to Insert** rollout. You can insert multiple copies of the existing blocks into an active sketch. To do so, select a block from the **Block List** selection box in the **Blocks to Insert** rollout; the selected block will be attached to the cursor. Next, click in the drawing area to insert it into the current sketch. Note that the block will still be attached to the cursor, which implies that you can insert multiple copies of that block by clicking repeatedly in the drawing area. You can also browse to the blocks by choosing the **Browse** button from the **Blocks to Insert** rollout. When you insert a block by browsing it from its location, the **Link to file** check box gets activated. Select this check box to link the block file to all the blocks that you have to place. The changes made in the original block will get reflected in all the blocks placed. Choose the **OK** button from the **Insert Block PropertyManager** to exit from it.

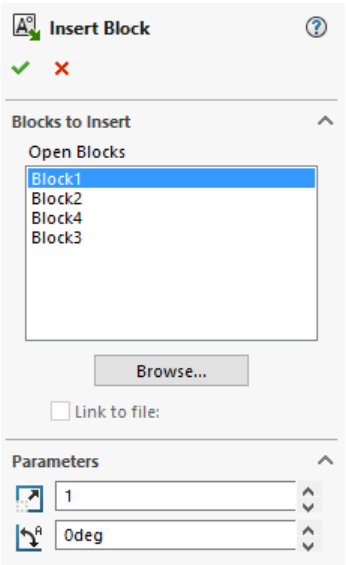

Figure 2-4** The **Insert Block PropertyManager

Parameters

In this rollout, the **Block Scale** and **Block Rotation** spinners are available. By default, 1 is displayed as the scale value in the **Block Scale** spinner. It indicates that the current scale

Evaluation Copy. Do not reproduce. For information visit www.cadcim.com

factor of the entity is 1. You can change the scale value of the block by using this spinner or by entering the scale value using the keyboard. The **Block Rotation** spinner is used to rotate the block by an angle or adjust the orientation of the block. The default angle value in the **Block Rotation** spinner is 0. You can change the default rotational angle value by using this spinner.

Edit Block

The **Edit Block** tool is used to add, remove, or modify the block entities, as well as change the existing relations and dimensions of the block entities. This tool is enabled in the **Blocks** toolbar only when you select a block from the drawing area. To edit a block, first ensure that the Sketching environment is activated. Then, click on the ▸ sign available on the left of **Sketch** in the **FeatureManager Design Tree** to expand the node and display the blocks, if they are not already displayed. Next, select the required block from the design tree and right-click; a shortcut menu will be displayed. Choose the **Edit Block** option from the shortcut menu. Alternatively, you can choose the **Edit Block** button from the **Blocks** toolbar. Now, you can edit the selected block as per your requirement. Once the changes are made, click on the block confirmation corner on the top right corner of the drawing area to exit from it.

Add/Remove

The **Add/Remove** tool is used to add or remove the sketch entities from a block. To add the sketch entities to a block by using the **Add/Remove** tool, select the required block from the drawing area or from the **FeatureManager Design Tree** and right-click; a shortcut menu will be displayed. Next, choose the **Edit Block** option from the shortcut menu; the **Add/Remove** button will be enabled in the **Blocks** toolbar. Choose the **Add/Remove** button to add or remove the sketched entities from the block; the **Add/Remove Entities PropertyManager** will be displayed, as shown in Figure 2-5. The names of the entities of the selected block will be displayed in the selection box of the **Block Entities** rollout. Select the required sketched entities from the drawing area to add them to the block. Note that the selected sketch entities will also be added to the selection box of the **Block Entities** rollout. Choose the **OK** button from the **Add/Remove Entities PropertyManager**; the selected sketch entities will be added to the block. To remove an entity from the selected block, invoke the **Add/Remove Entities PropertyManager** and then select the entity from the selection box of the **Block Entities** rollout. Next, press the DELETE key.

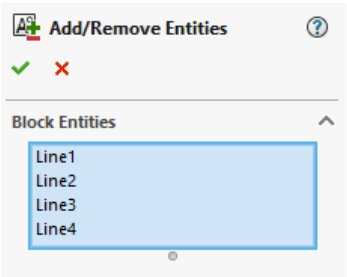

Figure 2-5** The **Add/Remove Entities PropertyManager

Rebuild

The **Rebuild** tool enables you to refresh or update the parent sketches after editing a block. If you have edited the position of a block by using the **Edit Block** tool, you will notice that the block no longer maintains relations with the other entities. To re-establish the relations, you need to choose the **Rebuild** button from the **Blocks** toolbar. Alternatively, choose **Tools > Blocks > Rebuild** from the SOLIDWORKS menus to re-establish or update the sketched entities.

Evaluation Copy. Do not reproduce. For information visit www.cadcim.com

Explode Block

The **Explode Block** tool is used to explode a selected block and dissolve it into the sketch entity. To explode a block, select the block from the **FeatureManager Design Tree**; the **Explode Block** button will be enabled in the **Blocks** toolbar. Choose the **Explode Block** button from the **Blocks** toolbar or choose **Tools > Blocks > Explode** from the SOLIDWORKS menus; the selected block will dissolve into the sketch. After dissolving a block, you can again turn it into a block by using the **Make Block** button, but a new name will be assigned to it.

Belt/Chain

The **Belt/Chain** tool is used to insert a belt between pulleys. This tool helps you to create the mechanisms such as multiple gear sets, cable and belt pulleys, chain sprocket system, and so on. A belt automatically creates the link motion of the pulleys based on their diameters. To add a belt/chain between pulleys, create sketches of the two or more pulleys in the drawing area and then convert them into separate blocks. The sketch of a pulley should be a circle or an arc only. Choose the **Belt/Chain** button from the **Blocks** toolbar or choose **Tools > Sketch Entities > Belt/Chain** from the SOLIDWORKS menus; the **Belt/Chain PropertyManage**r will be displayed, as shown in Figure 2-6, and you will be prompted to select a circle or an arc to define the belt members around which the belt will pass. The options available in this PropertyManager are discussed next.

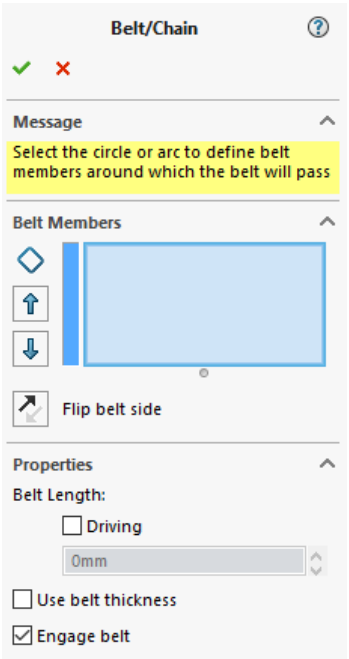

Figure 2-6 The Belt/Chain PropertyManager

Belt Members

The **Belt Members** rollout is used to display the name of the blocks that are selected to define belt members. Select the circular blocks from the drawing area to define the belt members. The selected blocks will be displayed in the **Pulley components** selection box of this rollout and the preview of the belt/chain mechanism will be displayed in the drawing area. You can also remove a selected block from the **Pulley components** selection box. To do so, select a block from the **Pulley components** selection box and invoke the shortcut menu. Next, choose the **Delete** option from the shortcut menu; the selected block will be removed from the selection box. Figure 2-7 shows the preview of the belt/chain mechanism after selecting the belt members.

The **Move Up** and **Move Down** buttons available on the left of the **Belt Members** rollout are used to change the order of the belt members. To move a particular block up in the selection area, select it and then choose the **Move Up** button. Similarly, the **Move Down** button is used to move the selected belt member down in the order. Using these buttons, you can arrange the sequence of the belt members in the selection area of the **Belt Members** rollout. You can also flip the side of the selected belt member on which the belt is placed, by choosing the **Flip belt side** button available in this rollout. Alternatively, you can flip the side of the belt member by clicking on the arrow of the belt member from the drawing area. Figure 2-8 shows the belt member whose side has to be flipped and Figure 2-9 shows the belt member after flipping the side.

Evaluation Copy. Do not reproduce. For information visit www.cadcim.com

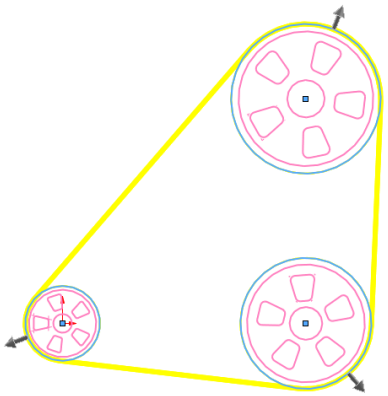

Figure 2-7 *Preview of the belt/chain mechanism*

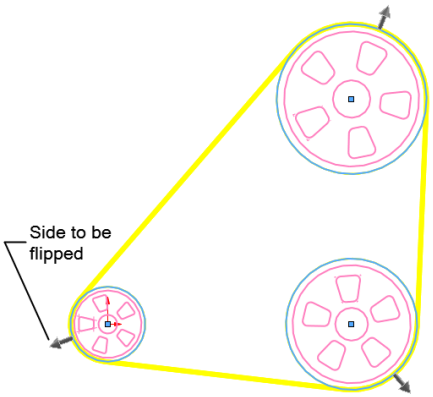

Figure 2-8 *The block entity before flipping the side*

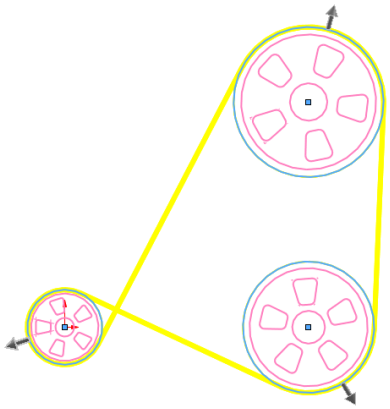

Figure 2-9 *The block entity after flipping the side*

Properties

By default, the **Driving** check box is clear in this rollout, and therefore, the driving length of the belt will be calculated automatically. Select the **Driving** check box to define the length of the belt as per your requirement; the length spinner will be activated. You can specify the driving length of the belt by using this spinner. To specify the thickness of the belt, select the **Use belt thickness** check box; the **Belt thickness** spinner will be displayed. You can specify the thickness of the belt in this spinner. The **Engage belt** check box is used to engage or disengage the belt mechanism. By default, this check box is selected and is used to engage the belt mechanism. To disengage the belt mechanism, clear this check box. Figure 2-10 shows the mechanism without specifying the belt thickness and Figure 2-11 shows the same mechanism after specifying the belt thickness.



Tip

If you draw spoke lines in the pulley, you can easily visualize the rotation of the pulley.

Evaluation Copy. Do not reproduce. For information visit www.cadcim.com

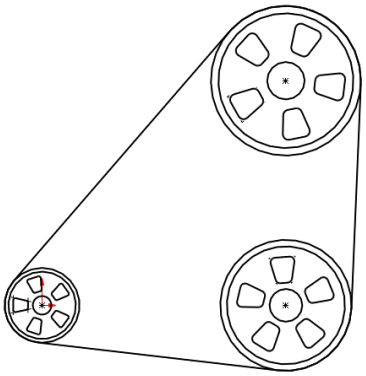

Figure 2-10 Mechanism without specifying the belt thickness

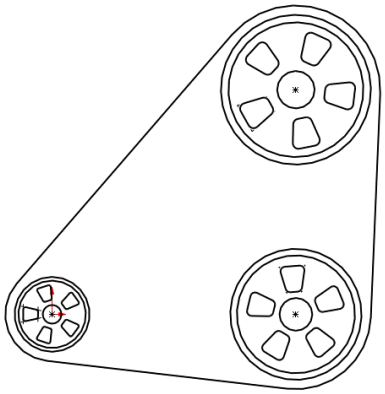

Figure 2-11 Mechanism after specifying the belt thickness

SAVING A SKETCH AS A BLOCK IN THE DESIGN LIBRARY

In SOLIDWORKS, you can directly save a sketch as a block in the **Design Library**. To do so, select the sketch from the **FeatureManager Design Tree** and then choose the **Design Library** tab from the task pane; the **Design Library** task pane will be invoked. Next, choose the **Add to Library** button from the **Design Library** task pane; the **Add to Library PropertyManager** will be displayed, as shown in Figure 2-12, and the name of the selected sketch will be displayed in the selection box available in the **Items to Add** rollout of the PropertyManager. Enter the file name in the **File name** edit box in the **Save To** rollout of the PropertyManager. Next, select the folder in which you want to save this file from the **Design Library folder** area. You can also create a new folder in the **Design Library folder** area by choosing the **Create New Folder** button from the **Design Library** task pane. The **Options** rollout in the **Add to Library PropertyManager** is used to view the file type or the extension of the file. Select the file type **SOLIDWORKS Blocks (*.sldblk)** from the **File type** drop-down list, if it is not selected. The **Enter Description** edit box in this rollout is used to enter the description of the block. This description will be displayed as a tooltip. After setting all the required parameters in the rollout, choose the **OK** button from the **Add to Library PropertyManager** to exit.

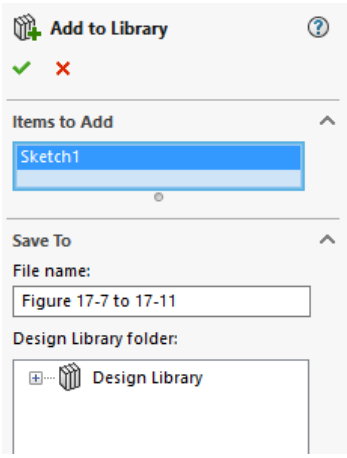

Figure 2-12 Partial view of the Add to Library PropertyManager

CREATING MECHANISMS BY USING BLOCKS

In SOLIDWORKS, you can create simple mechanisms by adding a suitable relation between the blocks. For example, the **Traction** relation is used to create mechanisms such as gear trains, rack and pinion, and so on. Similarly, you can create the cam and follower mechanism using the **Make Path** relation. The procedures to create these mechanisms are discussed next.

Evaluation Copy. Do not reproduce. For information visit www.cadcim.com

Creating the Rack and Pinion Mechanism

In SOLIDWORKS, you can create a rack and pinion mechanism by using the **Traction** relation. To do so, create two sketches, as shown in Figure 2-13, and convert them into two separate blocks. Next, select the circular block and then the vertical line of the other block by pressing the CTRL key; the **Properties PropertyManager** will be displayed, as shown in Figure 2-14. Note that the **Traction** button is available in the **Add Relations** rollout of the **Properties PropertyManager**. Choose this button and then click anywhere in the drawing area to exit from this PropertyManager. Similarly, apply other suitable constraints. Figure 2-15 shows the blocks before applying the **Traction** relation and Figure 2-16 shows the resultant blocks after applying the **Traction** relation. To check the linkage between these blocks, click on the vertical line of the block and drag it up or down in the drawing area. You will notice that the linear translation of one part results in a circular motion of the other part and vice-versa.

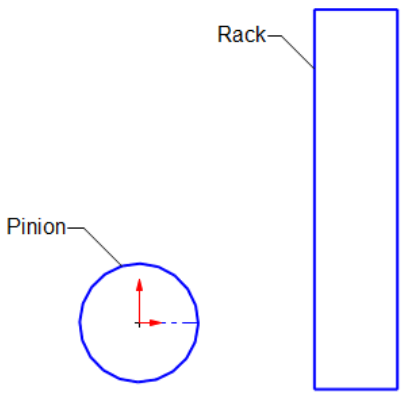

Figure 2-13 *Sketches to create blocks*

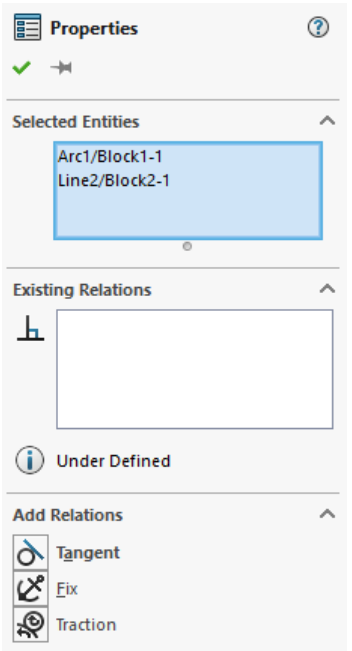

Figure 2-14 *The **Properties PropertyManager***

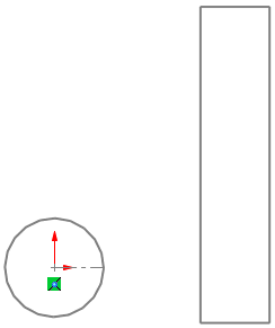

Figure 2-15 *The blocks before applying the **Traction** relation*

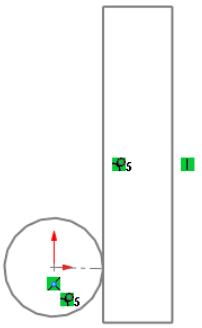

Figure 2-16 *The resultant blocks after applying the **Traction** relation*

Evaluation Copy. Do not reproduce. For information visit www.cadcim.com

Creating the Cam and Follower Mechanism

A cam is a rotating machine element which gives reciprocating or oscillating motion to another element known as follower. In SOLIDWORKS, you can create a cam and follower mechanism between two blocks by using the **Make Path** tool. To create a cam and follower mechanism, first you need to convert a cam profile into a single path by using the **Make Path** tool and then apply tangent relation between the cam and follower profiles. Note that the sketched entities of the cam profile to be converted as path should coincide with each other and form a single chain. The procedure to create a cam and follower mechanism is given below.

Create two sketches that represent a cam and a follower, as shown in Figure 2-17. Next, you need to convert the cam profile into a single path by using the **Make Path** tool. To do so, select the lower arc of the cam, as shown in Figure 2-18, and then choose **Tools > Sketch Tools > Make Path** from the SOLIDWORKS menus; the **Path Properties PropertyManager** will be displayed, as shown in Figure 2-19. In this PropertyManager, the selection box of the **Existing Relations** rollout displays the relations between the sketched entities that make up the path and the sketched entities with which the path interacts. Choose the **Edit Path** button from the **Definition** rollout of this PropertyManager; the **Path PropertyManager** will be displayed, as shown in Figure 2-20, and you will be prompted to select the entities that are coincident end to end and form a single chain. Note that the selected arc of the cam will be displayed in the **Selected Entities** rollout of the **Path PropertyManager**. Now, select the remaining sketched entities of the cam that have a tangent relation with each other from the drawing area to make a path. Choose the **OK** button to exit from the PropertyManager and then convert the sketches of cam and follower into separate blocks. Next, apply the relations, as shown in Figure 2-21. Figure 2-22 shows the cam and follower mechanism after applying the relations. To check the motion between the cam and the follower, click on the cam and drag it clockwise in the drawing area.

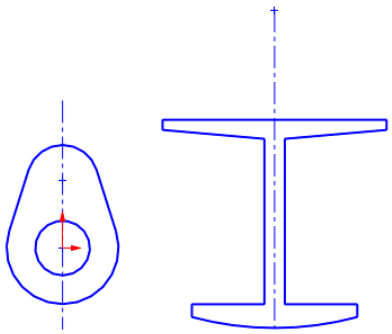

Figure 2-17 *Sketches of cam and follower*

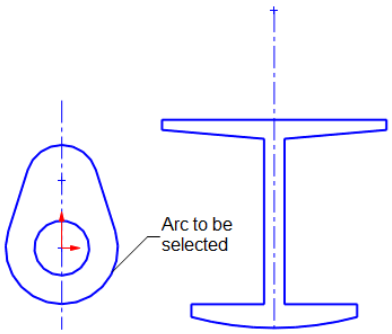

Figure 2-18 *The arc of the cam to be selected*

Evaluation Copy. Do not reproduce. For information visit www.cadcim.com

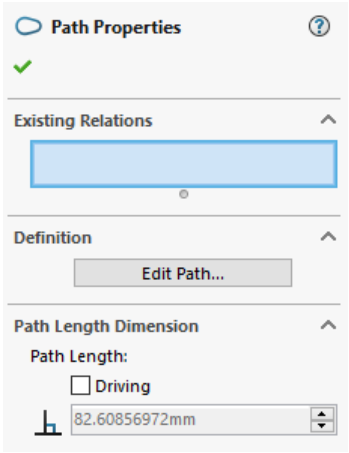

*Figure 2-19 The **Path Properties** PropertyManager*

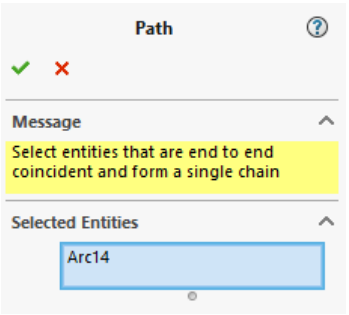

*Figure 2-20 The **Path** PropertyManager*

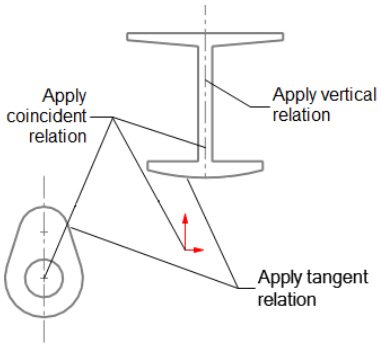

Figure 2-21 Entities to be selected for adding relations

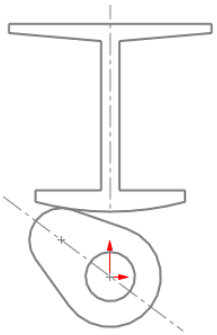

Figure 2-22 Cam and follower after applying the relation

APPLYING MOTION TO BLOCKS

In SOLIDWORKS, you can animate the mechanism created using blocks by applying motion to it. To do so, you need to create all the entities of the mechanism individually and then save them as separate blocks. Next, start a new SOLIDWORKS Assembly document by choosing the **Assembly** button from the **New SOLIDWORKS Document** dialog box; a new assembly session will be started and the **Begin Assembly PropertyManager** along with the **Open** dialog box will be invoked. Close the **Open** dialog box and then Choose the **Create Layout** button from the **Begin Assembly PropertyManager**; the Layout environment will be invoked. Insert all the blocks one by one in the drawing area by choosing the **Insert Block** button from the **Blocks** toolbar and apply the required relations between the blocks of the mechanism. After applying the required relation, choose the **Layout** button from the **Layout CommandManager** to exit from it. To add a motor, choose the **Motion Study 1** tab available at the lower left corner of the drawing area. Next, expand the **Expand MotionManager** rollout by clicking on the arrow at the lower-right corner of the drawing area if it is not expanded. In this MotionManager, the **Animation** option

Evaluation Copy. Do not reproduce. For information visit www.cadcim.com

is selected by default in the Type of Study drop-down list. Choose the **Motor** button from the **MotionManager** toolbar; the **Motor PropertyManager** will be displayed. Select the required motor from the **Motor Type** rollout and then specify the location of the motor in the **Motor Location** selection box of the **Component/Direction** rollout. After specifying all the required parameters, choose the **OK** button from the **Motor PropertyManager** to exit. To calculate the motion, choose the **Calculate** button from the **MotionManager** toolbar. Now, you can view the motion of the mechanism by choosing the **Play** button from the **MotionManager** toolbar.

To understand the process of applying motion to the blocks, consider the example of pulleys. In this example, in order to create a driver driven mechanism between three pulleys having diameters 10, 20, and 30, as well as to animate it, you need to draw three circles of diameters 10, 20, and 30 respectively in separate sketching environments and save them as block files. Make sure that you draw a centerline inside the circles to view the motion clearly. Next, open the Layout environment by choosing the **Create Layout** button from the **Begin Assembly PropertyManager**. Now, insert the circles which are saved as blocks, one by one into the drawing area by choosing the **Insert Block** button from the **Blocks** toolbar, as shown in Figure 2-23. Next, select the bigger and medium sized circles from the drawing area by pressing the CTRL key; the **Properties PropertyManager** will be displayed. Choose the **Traction** button from the **Add Relations** rollout of the PropertyManager to apply the **Traction** relation. Similarly, select the bigger and smaller circles from the drawing area and apply the **Traction** relation on them. Figure 2-24 shows the circles after applying the **Traction** relation on them. Finally, choose the **Layout** button from the **Layout CommandManager** to exit.

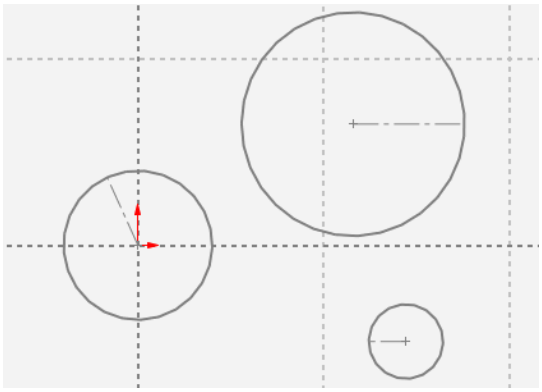

Figure 2-23 *Circles inserted in the drawing area*

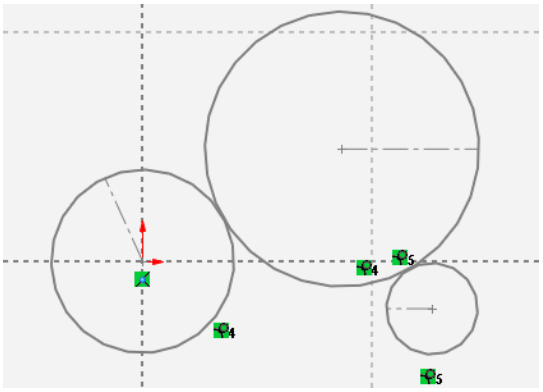

Figure 2-24 *Circles after applying the* ***Traction*** *relation*

Now, to animate these circles, choose the **Motion Study 1** tab, the **MotionManager** will be displayed. In the **MotionManager**, the **Animation** option is selected by default in the **Type of Study** drop-down list. Choose the **Motor** button from the **MotionManager** toolbar; the **Motor PropertyManager** will be displayed. By default, the **Rotary Motor** button is chosen in the **Motor Type** rollout of the PropertyManager. Now, you need to select the direction and location of the motor. Select any one of the circles to specify the location and direction of the motor from the drawing area. Choose the **OK** button from the PropertyManager to exit. To calculate the motion, choose the **Calculate** button from the **MotionManager** toolbar. Next, choose the **Play** button to view the motion between the three circles after applying the **Traction** relation.

Evaluation Copy. Do not reproduce. For information visit www.cadcim.com

Note

You can also create the sketches of the mechanism and convert them into separate blocks in the Layout environment itself.

CREATING PARTS FROM BLOCKS

As discussed earlier, you can create parts from the blocks. To create a part from a block, choose the **Make Part from Block** button from the **Layout CommandManager**; the **Make Part From Block PropertyManager** will be displayed, as shown in Figure 2-25. The options in this PropertyManager are discussed next.

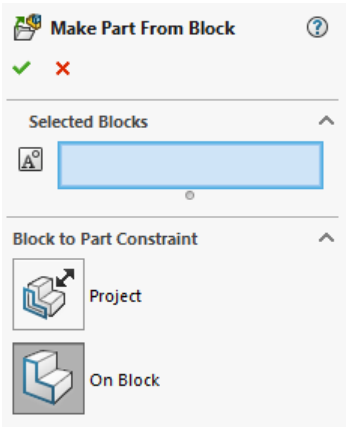

Figure 2-25** The **Make Part From Block PropertyManager

Selected Blocks

This rollout lists the blocks that will be selected for creating parts from the drawing area. Select a block from the drawing area; the selected block will be displayed in the selection box of **Selected Blocks** rollout. You can select more than one block from the drawing area.

Block to Part Constraint

In this rollout, there are two buttons: **Project** and **On Block**. These buttons are used to create parts from blocks. By default, the **On Block** button is chosen in this rollout. On choosing the **Project** button from the **Block to Part Constraint** rollout, you can create a part from the block. This part will be projected on the plane of the block in the Layout environment. You can drag this part in the drawing area, normal to the plane of the block and it will not be constrained to be coplanar with the plane of the block in the layout environment, but the part created by choosing the **On Block** button will be constrained to be coplanar with the plane of the block in the layout environment.

Select a block from the drawing area of the Layout environment; the selected block will be displayed in the selection box of the **Selected Blocks** rollout. Choose the **OK** button from the PropertyManager to confirm the selection. The selected block will be displayed as a part in the **FeatureManager Design Tree**. The part name will be the same as the block name. Note that the name of the part in the design tree will be covered by a square bracket, indicating that it is a virtual component. The virtual components are saved internally in the assembly file in which they are created. You can save these components into external files later on. Next, right-click on the part name or virtual component in the design tree; a shortcut menu will be displayed. Choose the **Open Part** button from the shortcut menu; the selected part will open in the **Part** environment. Now, you can convert it into a solid feature using the tools available in the **Features CommandManager**. Next, open the layout environment again by choosing **Window > name of the layout assembly** from the SOLIDWORKS menus.

Evaluation Copy. Do not reproduce. For information visit www.cadcim.com

TUTORIALS

Tutorial 1

In this tutorial, you will create a reciprocating mechanism by assembling different blocks, as shown in Figure 2-26. You will also convert the blocks of the reciprocating mechanism into parts. The final assembly of the mechanism after converting blocks into parts is shown in Figure 2-27. Figures 2-28 through 2-30 show different views of the parts of the mechanism with the required dimensions. **(Expected time: 45 min)**

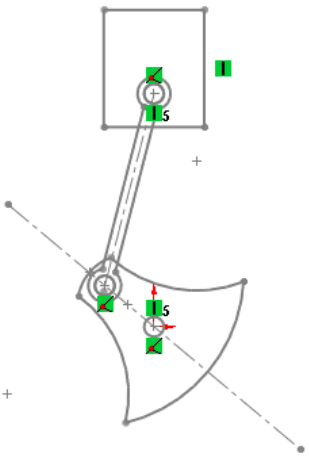

Figure 2-26 *Reciprocating mechanism created by assembling the blocks*

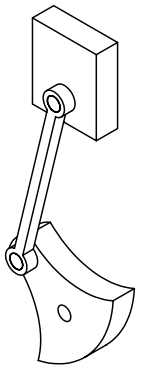

Figure 2-27 *Reciprocating mechanism after converting the blocks into parts*

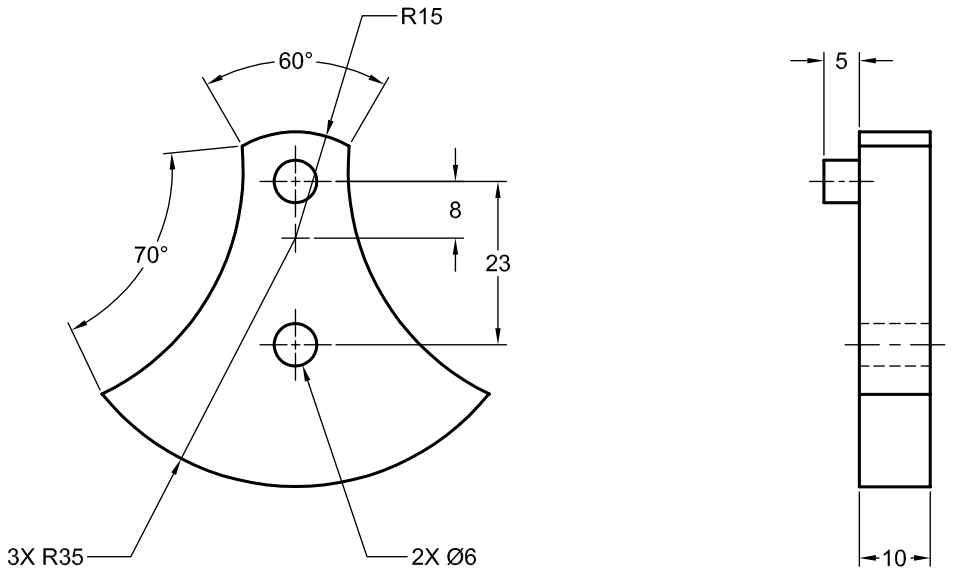

Figure 2-28 *The front and right views of the crank*

Evaluation Copy. Do not reproduce. For information visit www.cadcim.com

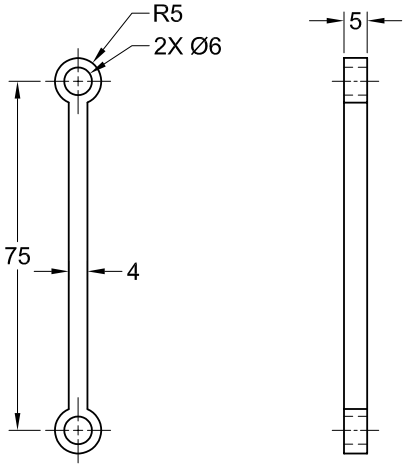

Figure 2-29 The front and side views of the piston rod

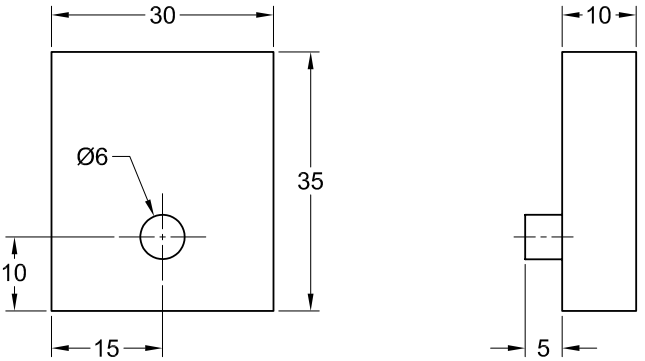

Figure 2-30 The front and side views of the piston tank

The following steps are required to complete this tutorial:

a. Create the sketches of the mechanism by using the sketch tools.
b. Save sketches as different block files.
c. Insert blocks into the Layout environment.
d. Apply relations between blocks.
e. Convert blocks into parts.
f. Save and close the document.

Creating the First Sketch of the Mechanism

1. Start a new SOLIDWORKS part document using the **New SOLIDWORKS Document** dialog box and invoke the sketching environment.

2. Draw the front view of the crank, refer to Figure 2-28, by using the tools in the **Sketch CommandManager**.

Saving the Sketch as a Block File

You need to save the sketch of the crank as a block file.

1. Choose the **Save Sketch as Block** button from the **Blocks** toolbar; the **Save As** dialog box is displayed. Enter **Crank** as the name of the sketch in the **File name** edit box. Browse to the required location and then choose the **Save** button to exit from it. Alternatively, choose **Tools > Blocks > Save** from the SOLIDWORKS menus to save the sketch as a block file.

2. Close the current sketching environment by choosing **File > Close** from the SOLIDWORKS menus; the **SOLIDWORKS** message window is displayed. Choose the **Don't Save** button from it.

Evaluation Copy. Do not reproduce. For information visit www.cadcim.com

Creating the other Sketches of the Mechanism and Saving them as Block Files

You need to create other sketches of the mechanism in different sketching environments and then save them as separate block files.

1. Start a new SOLIDWORKS part document by using the **New SOLIDWORKS Document** dialog box and invoke the sketching environment.

2. Draw the sketch of the front view of the piston rod, refer to Figure 2-29.

3. Select the sketch and save it as a block file by choosing the **Save Sketch as Block** button from the **Blocks** toolbar. Enter **Piston_rod** in the **File name** edit box of the **Save As** dialog box and then choose the **Save** button.

4. Similarly, draw the sketch of the piston tank, refer to Figure 2-30, and then save the sketch as a separate block file with the name **Piston_tank**.

Inserting Blocks in the Layout Environment

You need to insert blocks in the layout environment and then apply the required relation between them.

1. Start a new SOLIDWORKS Assembly environment by using the **New SOLIDWORKS Document** dialog box. Close the **Open** dialog box and then choose the **Create Layout** button from the **Begin Assembly PropertyManager**; the layout environment is invoked.

2. Choose the **Insert Block** button from the **Blocks** toolbar; the **Insert Block PropertyManager** is displayed.

3. Choose the **Browse** button from the **Blocks to Insert** rollout of the **Insert Block PropertyManager**; the **Open** dialog box is displayed.

4. Select **Crank** from the **Open** dialog box and then choose the **Open** button; the selected block is attached to the cursor.

5. Click anywhere in the drawing area to place the block and then right-click to display the shortcut menu. Choose **OK** from the shortcut menu.

6. Similarly, insert the **Piston_rod** and **Piston_tank** blocks in this layout environment. To change the current view orientation normal to the screen, choose the **View Orientation** button from the **View (Heads-Up)** toolbar; a flyout is displayed. Choose the **Normal To** button from the flyout. Figure 2-31 shows the blocks inserted in the layout environment.

Applying Relations to the Blocks

You need to apply relations to the blocks to assemble them and to view the motion of the mechanism.

Evaluation Copy. Do not reproduce. For information visit www.cadcim.com

1. Press and hold the CTRL key, and then select the center of the lower circle of the **Crank** and the origin, as shown in Figure 2-32; the **Properties PropertyManager** is displayed.

2. Choose the **Coincident** button from the **Add Relations** rollout of the **Properties PropertyManager**; the Coincident relation is applied between the selected points. Click anywhere in the drawing area to exit the **Properties PropertyManager**.

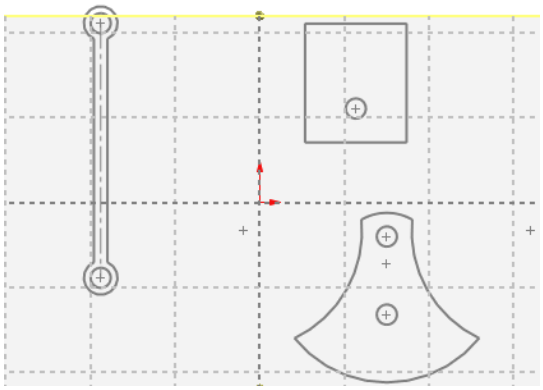

Figure 2-31 *Blocks after they are inserted in the layout environment*

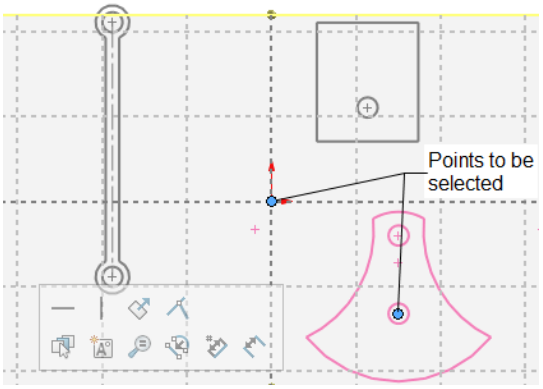

Figure 2-32 *Points to be selected to apply the relation*

3. Next, apply the relations, as shown in Figure 2-33. Figure 2-34 shows the blocks after applying the required relations. Now, the blocks act as a reciprocating mechanism.

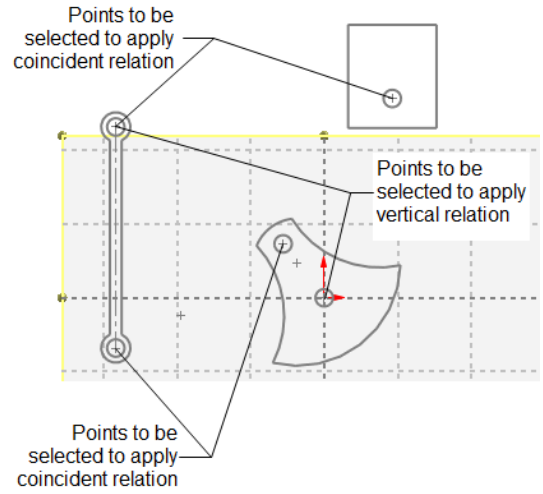

Figure 2-33 *Points selected to apply the relations*

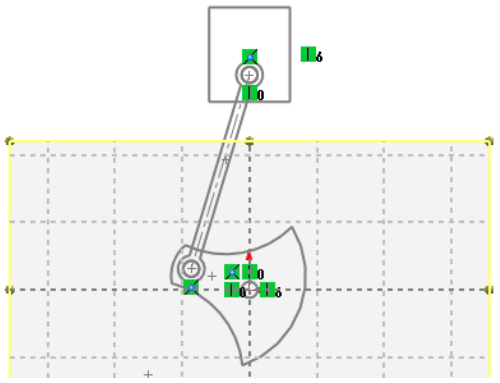

Figure 2-34 *Blocks after applying the required relations*

4. To view the motion of the mechanism, press and hold the left mouse button on the point, as shown in Figure 2-35, and then rotate the cursor in the clockwise direction.

Evaluation Copy. Do not reproduce. For information visit www.cadcim.com

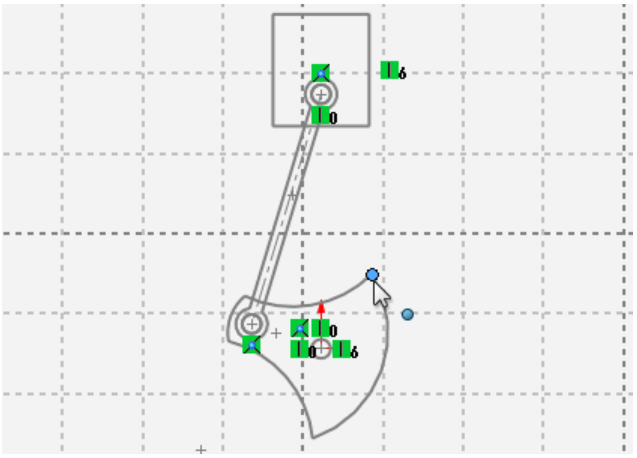

Figure 2-35 Point selected to view the motion of the mechanism

Converting Blocks into Parts

Now, you need to convert the blocks into parts to create a 3D mechanism.

1. Choose the **Make Part from Block** button from the **Layout CommandManager**; the **Make Part From Block PropertyManager** is displayed.

2. Select all the blocks from the drawing area; the names of the selected blocks are displayed in the **Selected Blocks** rollout of the PropertyManager. Make sure that the **On Block** button is chosen in the **Block to Part Constraint** rollout of **Make Part From Block PropertyManager**. Choose the **OK** button; all the blocks are displayed as parts in the **FeatureManager Design Tree** with the part symbol on their left.

3. Choose the **Rebuild** button from the Menu Bar to update the change.

4. Select the **Crank** block from the **FeatureManager Design Tree**; a pop-up toolbar is displayed. Choose the **Edit Part** button from the pop-up toolbar; the Part environment is invoked. Choose the **Features** tab from the **CommandManager**.

5. Next, choose the **Extruded Boss/Base** button from the **Feature CommandManage**r; the **Extrude PropertyManager** is displayed and you are prompted to select a sketching plane or an existing sketch. Select the sketch of the crank from the drawing area or from the **FeatureManager Design Tree**; its preview is displayed in the drawing area.

6. In the **Direction 1** rollout of the PropertyManager, the **Blind** option is selected by default in the **End Condition** drop-down list. Enter **10** mm in the **Depth** spinner of the **Direction 1** rollout and choose the **Reverse Direction** button to flip the direction of the extrusion. Make sure the **Thin Feature** rollout is not activated. Choose the **OK** button to exit the PropertyManager.

   Next, you need to extrude the upper hole of the **Crank**, refer to Figure 2-28.

Evaluation Copy. Do not reproduce. For information visit www.cadcim.com

7. Select the sketch of the previously extruded feature from the **FeatureManager Design Tree** and then choose the **Extruded Boss/Base** button from the **Features CommandManager**; the **Boss-Extrude PropertyManager** is displayed.

8. Expand the **Selected Contours** rollout in this PropertyManager. Move the cursor toward the upper hole of the **Crank** and then select it when it highlights in a different color, as shown in Figure 2-36.

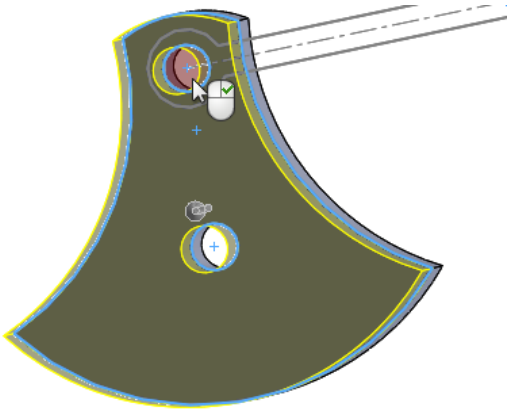

Figure 2-36 *Hole of the crank to be selected*

9. Enter **5** mm in the **Depth** spinner of the **Direction 1** rollout. Expand the **Direction 2** rollout and enter **10** mm in the **Depth** spinner. Choose the **OK** button to exit from it; the crank feature is displayed in the drawing area.

10. Click on the confirmation corner in the upper right of the drawing area. If the rebuild icon is available on the left of the **Crank** in the design tree. Choose the **Rebuild** button from the Menu Bar to rebuild the part.

11. Select the **Piston_rod** block from the **FeatureManager Design Tree**; a pop-up toolbar is displayed.

12. Choose the **Edit Part** button from the pop-up toolbar to invoke the Part environment. Choose the **Features** tab, if it is not already invoked.

13. Invoke the **Extrude PropertyManager**, select the sketch of the **Piston_rod** from the drawing area or from the **FeatureManager Design Tree** and enter **5** mm in the **Depth** spinner in the **Direction 1** rollout of the PropertyManager. Choose the **OK** button to exit from it.

14. Next, click on the confirmation corner in the upper right of the drawing area and then choose the **Rebuild** button from the Menu Bar.

15. Similarly, select the **Piston_tank** block from the **FeatureManager Design Tree** and invoke the Part environment.

Evaluation Copy. Do not reproduce. For information visit www.cadcim.com

16. Invoke the **Extrude PropertyManager** and select the sketch of the piston tank from the drawing area or from the **FeatureManager Design Tree**; its preview is displayed.

17. Enter **10** mm in the **Depth** spinner of the **Direction 1** rollout.

18. Choose the **Reverse Direction** button from the **Direction 1** rollout of the PropertyManager and then choose **OK**.

    Next, you need to create the shaft for the **Piston_tank**, refer to Figure 2-30.

19. Select the sketch of the **Piston_tank** from the **FeatureManager Design Tree** and then invoke the **Extrude PropertyManager**.

20. Expand the **Selected Contours** rollout of the PropertyManager and move the cursor toward the hole of the **Piston_tank**. Next, select it by using the left mouse button when it is highlighted in a different color.

21. Enter **5** mm in the **Depth** spinner of the **Direction 1** rollout. Next, expand the **Direction 2** rollout and enter **10** mm in the **Depth** spinner of this rollout. Now, choose **OK** from this PropertyManager and then exit by clicking on the confirmation corner available at the upper right of the drawing area.

22. Choose the **Rebuild** button from the Menu Bar to rebuild the part. Next, choose the **Visibility Off** button from the **View (Heads-Up)** toolbar; a flyout is displayed. Choose the **View Sketches** option to hide the sketches. Figure 2-37 shows the mechanism after hiding the sketches of the parts.



Figure 2-37 *Reciprocating mechanism after hiding the sketches*

Saving the Model

You can see that the name of the components in the **FeatureManager Design Tree** is enclosed in parenthesis. This indicates that these are virtual components and will be saved internally, if you choose the **Save** button. So, first you need to make them regular components and save externally.

1. Right-click on the **Crank** block and choose the **Save Part (in External File)** option from the shortcut menu displayed; the **Save As** dialog box will be displayed.

2. Choose the **Specify Path** button and browse to the location.

3. Similarly, save other components.

4. Choose the **Save** button from the Menu Bar and save the mechanism with the name *c02_tut01* at the location given below:
   \Documents\SOLIDWORKS\c02

5. Close the document by choosing **File > Close** from the SOLIDWORKS menus.

Evaluation Copy. Do not reproduce. For information visit www.cadcim.com

Tutorial 2

In this tutorial, you will convert 2D blocks into parts in the Layout environment and then assemble them to create a mechanism, as shown in Figure 2-38. Also, you will animate the mechanism by applying the rotary motor. Figures 2-39 through 2-42 show different views of the parts of the mechanism with required dimensions. **(Expected time: 45 min)**

Evaluation Copy. Do not reproduce. For information visit www.cadcim.com

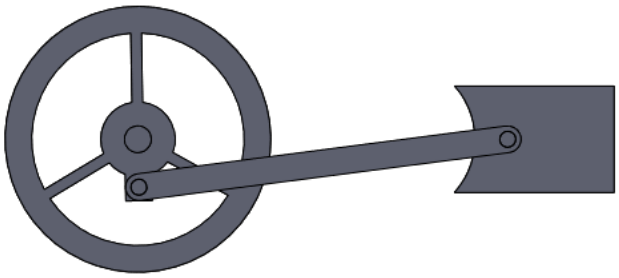

Figure 2-38 *Mechanism created by assembling the parts*

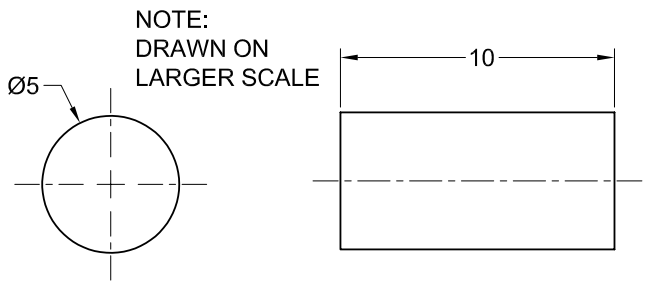

Figure 2-39 *The front and side views of the Shaft*

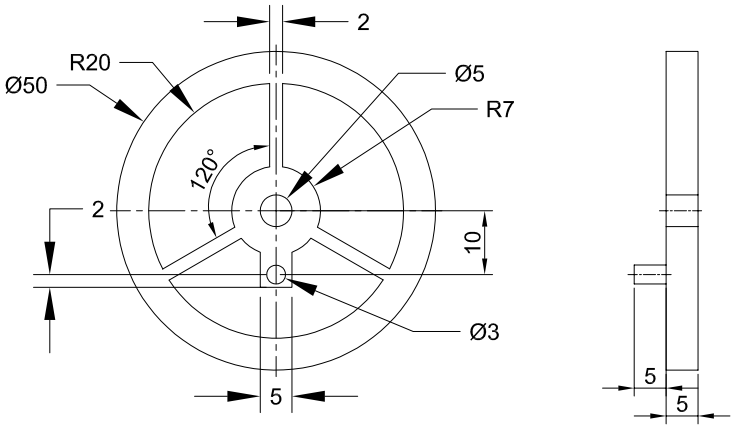

Figure 2-40 *The front view of the Wheel*

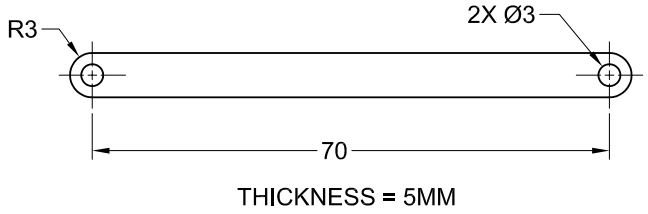

Figure 2-41 *The front view of the Connecting rod*

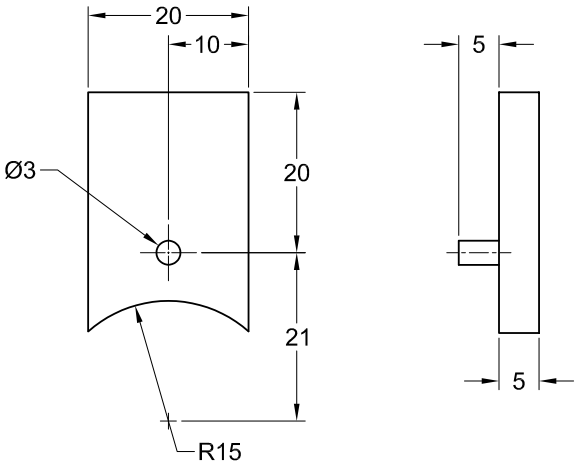

Figure 2-42 *The front and side views of the Slider*

The following steps are required to complete this tutorial:

a. Create the sketches of the mechanism by using the sketch tools and save them as different block files.
b. Insert blocks into the layout environment.
c. Convert blocks into parts.
d. Assemble parts.
e. Animate the mechanism by applying the rotary motor.
f. Save the mechanism and then close the document.

Creating the Sketches of the Mechanism and Saving them as Block Files

1. Start a new SOLIDWORKS part document by using the **New SOLIDWORKS Document** dialog box and invoke the sketching environment.

2. Draw the sketch of the front view of the Shaft by using the tools in the **Sketch CommandManager**. For dimensions of the shaft, refer to Figure 2-39. Save the sketch of the Shaft as a block file in the *c02* folder by choosing the **Save Block** button in the **Blocks** toolbar.

Evaluation Copy. Do not reproduce. For information visit www.cadcim.com

3. Similarly, create the sketches of the Wheel, Connecting rod, and Slider in a separate sketching environment. For dimensions of the sketches, refer to Figures 2-40 through 2-42. Save all the sketches as separate block files in the *c02* folder.

Inserting all Blocks in the Layout Environment

After you have saved all sketches as separate block files, you need to place these blocks one by one in the layout environment to convert them into parts.

1. Start a new Assembly document by choosing the **Assembly** button from the **New SOLIDWORKS Document** dialog box. Close the **Open** dialog box and then choose the **Create Layout** button from the **Begin Assembly PropertyManager**; the layout environment is invoked.

2. Choose the **View Orientation** button from the **View (Heads-Up)** toolbar; a flyout is displayed. Choose the **Normal To** button from the flyout to change the orientation of the plane normal to the screen.

3. Choose the **Insert Block** button from the **Blocks** toolbar and insert the Shaft, Wheel, Connecting rod, and Slider in the layout environment, as shown in Figure 2-43.

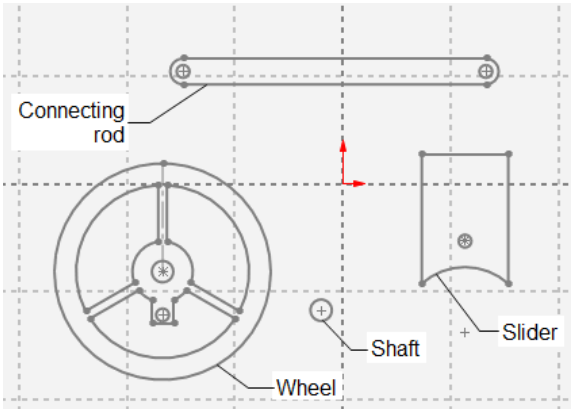

Figure 2-43 *The blocks inserted in the Layout environment*

Converting Blocks into Parts

Now, you need to convert all the blocks into parts to create a 3D mechanism.

1. Choose the **Make Part from Block** button from the **Layout CommandManager**; the **Make Part From Block PropertyManager** is displayed.

2. Select all the blocks from the drawing area or from the **FeatureManager Design Tree**; the names of the selected blocks are displayed in the **Selected Blocks** selection box. Choose the **OK** button from the PropertyManager; all blocks are displayed with the part symbol on the left in the **FeatureManager Design Tree**.

3. Choose the **Rebuild** button from the Menu Bar to update the change.

Evaluation Copy. Do not reproduce. For information visit www.cadcim.com

4. Select **Shaft** from the **FeatureManager Design Tree** and right-click; a pop-up toolbar is displayed. Choose the **Edit Part** button from this toolbar; the Part environment is invoked.

5. Choose the **Features** tab from the CommandManager.

6. Choose the **Extruded Boss/Base** button from the **Features CommandManager**; the **Extrude PropertyManager** is displayed and you are prompted to select the sketch.

7. Select the sketch of the **Shaft** from the drawing area; the preview of the shaft is displayed.

8. Enter **10** mm in the **Depth** spinner of the **Direction 1** rollout and then choose the **Reverse Direction** button. Next, choose the **OK** button to exit from the PropertyManager.

9. Click on the confirmation corner available in the upper right corner of the screen.

10. Similarly, select the Wheel from the **FeatureManager Design Tree** and right-click; a pop-up toolbar is displayed. Invoke the Part environment by choosing the **Edit Part** button from the pop-up toolbar.

11. Invoke the **Extrude PropertyManager** by choosing the **Extruded Boss/Base** button from the **Feature CommandManager**.

12. Select the sketch of Wheel from the drawing area or from the **FeatureManager Design Tree**; its preview is displayed. Enter **5** mm in the **Depth** spinner and choose the **Reverse Direction** button in the **Direction 1** rollout of the PropertyManager. Choose the **OK** button.

13. Click on the ▸ sign available on the left of the **Boss-Extrude** feature of the Wheel in the **FeatureManager Design Tree**; the sketch of the extrude feature is displayed.

14. Select the sketch of the extrude feature from the **FeatureManager Design Tree** and invoke the **Boss-Extrude PropertyManager**.

15. Expand the **Selected Contours** rollout in the PropertyManager. Zoom the wheel feature and select the area of the Wheel to be extruded, as shown in Figure 2-44.

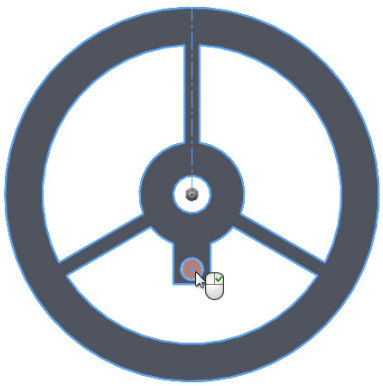

Figure 2-44 *The area selected to be extruded*

Evaluation Copy. Do not reproduce. For information visit www.cadcim.com

16. Enter **10** mm in the **Depth** spinner of the **Direction 1** rollout and extrude it by using the **Mid Plane** option. Click on the confirmation corner to exit from it.

17. Select the Connecting rod from the **FeatureManager Design Tree** and right-click; a pop-up toolbar is displayed. Invoke the Part environment by choosing the **Edit Part** button from the pop-up toolbar.

18. Invoke the **Extrude PropertyManager** and select the sketch of the Connecting rod from the design tree. Enter **5** mm in the **Depth** spinner of the **Direction 1** rollout and then choose the **OK** button to from the **Boss-Extrude PropertyManager**. Next, click on the confirmation corner.

19. Select the Slider from the **FeatureManager Design Tree** and invoke the Part environment by choosing the **Edit Part** button from the pop-up toolbar displayed.

20. Invoke the **Extrude PropertyManager** and select the sketch of the slider from the drawing area; its preview is displayed.

21. Enter **5** mm in the **Depth** spinner of the **Direction 1** rollout and choose the **Reverse Direction** button in the PropertyManager. Next, choose the **OK** button to exit.

22. Click on the ▸ sign available on the left of the **Boss-Extrude** feature of the slider in the design tree; the sketch of the extrude feature is displayed.

23. Select the sketch of the extrude feature from the design tree and invoke the **Boss-Extrude PropertyManager**. Next, expand the **Selected Contours** rollout and select the area enclosed by the hole of diameter 3 mm in the Slider; its preview is displayed.

24. Enter **10** mm in the **Depth** spinner of the **Direction 1** rollout and extrude it using the **Mid Plane** option. Finally, choose the **OK** button to exit from the PropertyManager.

25. Click on the confirmation corner to exit from the Part environment. Figure 2-45 shows the blocks after they have been converted into parts.

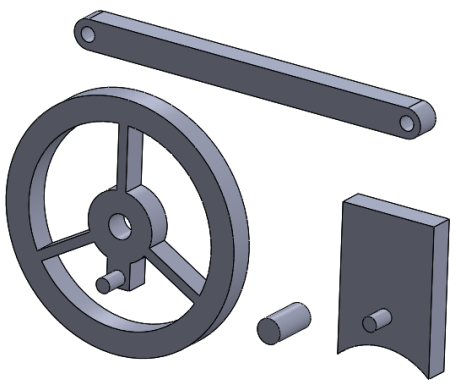

Figure 2-45 *Blocks after being converted into parts*

Evaluation Copy. Do not reproduce. For information visit www.cadcim.com

Assembling the Parts

Once all parts have been created, you need to assemble them in the Assembly environment using the mate relations.

1. Choose the **Assembly** tab from the **CommandManager**; the **Assembly CommandManager** is displayed.

   First, you need to assemble the Wheel with the Shaft. Therefore, you need to fix the Shaft.

2. Select the Shaft from the drawing area and right-click; a shortcut menu is displayed. Choose the **Fix** option from the shortcut menu; the Shaft gets fixed. Now, you cannot move or rotate it.

3. Invoke the **Mate PropertyManager** and apply the **Concentric** mate between the innermost circular face of the Wheel and the Shaft, refer to Figure 2-46. Choose the **Add/Finish Mate** button from the **Mate** pop-up toolbar.

4. Apply the **Concentric** mate between the left-most inner circular face of the **Connecting rod** and the cylindrical face of the handle on the Wheel, refer to Figure 2-46. Choose the **Add/Finish Mate** button from the **Mate** pop-up toolbar.

5. Similarly, apply the **Concentric** mate between the cylindrical face of the handle on the Slider and the other circular face of the Connecting rod, refer to Figure 2-46. Choose the **Add/Finish Mate** button from the **Mate** pop-up toolbar.

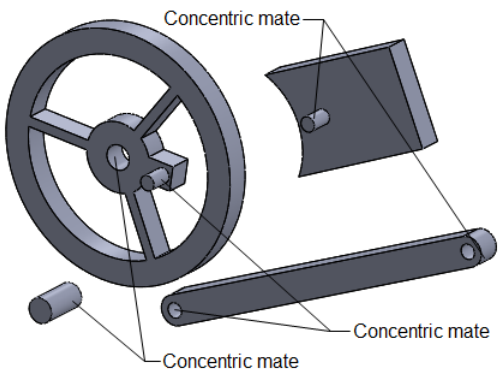

Figure 2-46 *Parts faces selected to apply the mates*

6. Next, apply the **Coincident** mate between the horizontal planes of the Shaft and the Slider, refer to Figure 2-47. Next, exit from the **Mate PropertyManager**. Figure 2-48 shows the final assembly of the mechanism.

Evaluation Copy. Do not reproduce. For information visit www.cadcim.com

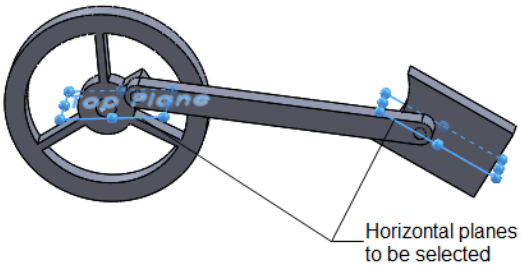

Figure 2-47 The planes to be selected

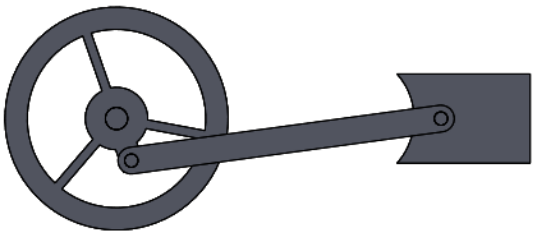

Figure 2-48 The final mechanism

Applying Motion to the Mechanism

Next, you need to apply motion to the mechanism to check its working.

1. Choose the **Motion Study 1** tab available at the lower left corner of the drawing area; the **MotionManager** is displayed.

2. Choose the **Motor** button from the **MotionManager** toolbar; the **Motor PropertyManager** is displayed.

3. The **Rotary Motor** is selected by default in this PropertyManager. Select the front face of the Wheel as reference for specifying the direction of rotation; the selected face is displayed in the **Motor Direction** selection box of the **Component / Direction** rollout of the PropertyManager. You can flip the direction of the rotation of the motor, if required, by choosing the **Reverse Direction** button from the **Component / Direction** rollout.

4. Choose the **OK** button from the **Motor PropertyManager** to exit.

5. Choose the **Calculate** button from the **MotionManager** toolbar to calculate the motion of the mechanism.

6. Choose the **Play** button from the **MotionManager** toolbar to view the motion of the mechanism and then choose the **Stop** button to stop the motion of the mechanism.

7. Finally, choose the **Rebuild** button from the Menu Bar.

Saving the Model

1. Choose the **Save** button from the Menu Bar; the **Save Modified Documents** dialog box is displayed.

2. Ensure that all the check boxes in the file name column are selected. Next, choose the **Save All** button; the **Save As** dialog box is displayed.

Evaluation Copy. Do not reproduce. For information visit www.cadcim.com

3. Browse to the location, enter **c02_tut02** as the file name and choose the **Save** button; the **SOLIDWORKS** message box is displayed.

4. Choose the **OK** button from this message box; the **Save As** dialog box is displayed again.

5. Select the **Save externally (specify paths)** radio button and choose the **OK** button; the assembly is saved.

6. Close the document by choosing **File > Close** from the SOLIDWORKS menus.

Self-Evaluation Test

Answer the following questions and then compare them to those given at the end of this chapter:

1. In SOLIDWORKS, the _____ button in the **Blocks** toolbar is used to make each entity of a sketch as a separate block.

2. The _____ check box in the **Belt/Chain PropertyManager** is selected to specify the thickness of the belt.

3. Choose the _____ button in the **Definition** rollout of the **Path Properties PropertyManager** to invoke the **Path PropertyManager**.

4. The _____ button in the **Blocks** toolbar is used to edit a block.

5. The _____ button in the **Belt Members** rollout of the **Belt/Chain PropertyManager** is used to flip the side of a selected belt member.

6. The **Traction** relation is used to create a driver-driven mechanism. (T/F)

7. In SOLIDWORKS, you can save a sketch directly as a block in the **Design Library**. (T/F)

8. In SOLIDWORKS, you cannot animate a mechanism created out of blocks by applying motor to it. (T/F)

9. You cannot change the order of the belt members that are selected in the selection area of the **Belt Members** rollout. (T/F)

10. The **Insert Block** tool is used to insert the blocks into an active sketch. (T/F)

Evaluation Copy. Do not reproduce. For information visit www.cadcim.com

Review Questions

Answer the following questions:

1. Which of the following buttons in the **Blocks** toolbar is used to add or remove the sketch entities?

   (a) **Edit Block** (b) **Make Block**
   (c) **Add/Remove** (d) **Explode Block**

2. Which of the following tools is used to make each entity of a sketch as a separate block?

   (a) **Save Blocks** (b) **Make Block**
   (c) **Edit Block** (d) **Add/Remove**

3. Which of the following tools is used to dissolve a block into a sketched entity?

   (a) **Belt/Chain** (b) **Rebuild**
   (c) **Add/Remove** (d) **Explode Block**

4. The _____ tool helps you to create a path of sketched entities that are coincident end to end and form a single chain.

5. The _____ button in the **Make Part From Block PropertyManager** is used to create a part that is constrained to be coplanar with the plane of the block in the Layout environment.

6. The _____ button is used to invoke the **Make Part From Block PropertyManager**.

7. While inserting a block in an active sketch, you can change its scale value by using the _____ spinner.

8. To refresh or update the sketches, choose the _____ button from the **Blocks** toolbar.

9. To create a part from the block, you need to invoke the _____ **PropertyManager**.

10. The **Belt/Chain** tool is used to insert a belt between_____.

EXERCISE

Exercise 1

Create a mechanism by assembling the blocks, as shown in Figure 2-49, and then convert the blocks of the mechanism into parts. Figure 2-50 shows the mechanism after converting blocks into parts. Figures 2-51 through 2-54 show different views of parts of the mechanism with required dimensions. **(Expected time: 45 min)**

Evaluation Copy. Do not reproduce. For information visit www.cadcim.com

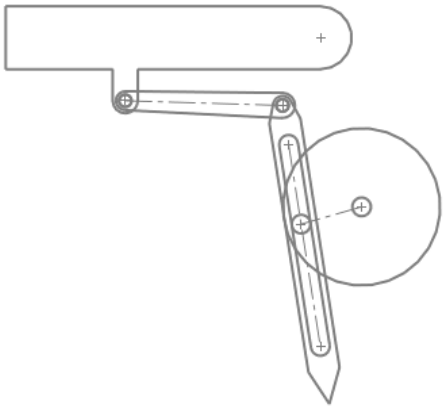

Figure 2-49 *Mechanism created by assembling the blocks*

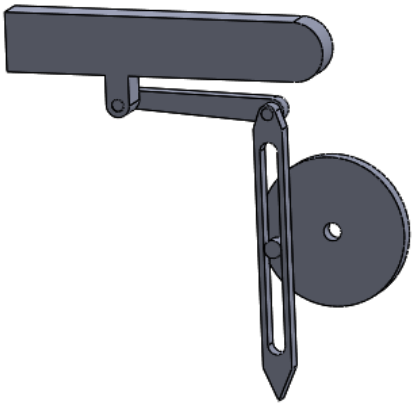

Figure 2-50 *Mechanism after converting the blocks into parts*

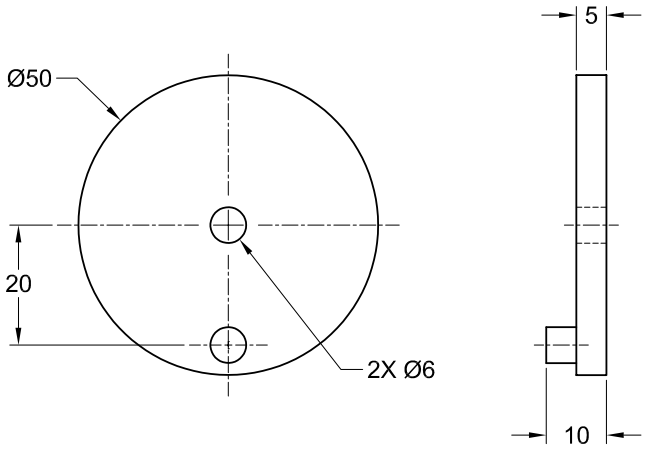

Figure 2-51 *The front and side views of the Wheel*

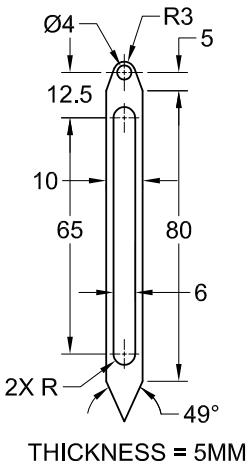

Figure 2-52 *The front view of the Connecting rod1*

Evaluation Copy. Do not reproduce. For information visit www.cadcim.com

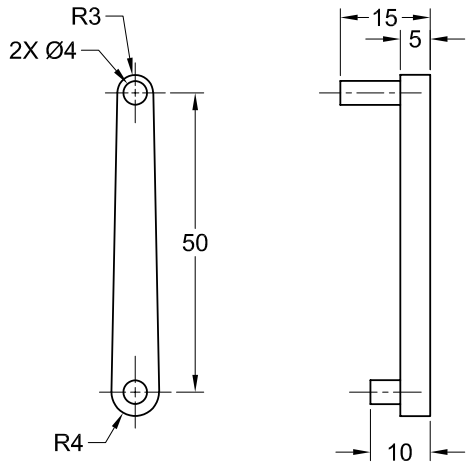

Figure 2-53 *The front and side views of the Connecting rod2*

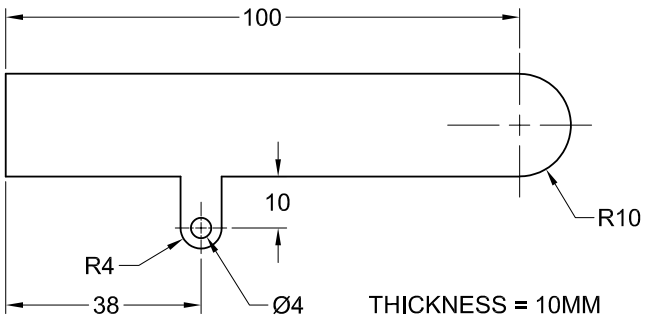

Figure 2-54 *The top view of the Ram*

Evaluation Copy. Do not reproduce. For information visit www.cadcim.com

Answers to Self-Evaluation Test

1. Make Block, **2. Use belt thickness**, **3. Edit Path**, **4. Edit Block**, **5. Flip belt side**, **6.** T, **7.** T, **8.** F, **9.** F, **10.** T