Chapter 17

Introduction to Generative Shape Design

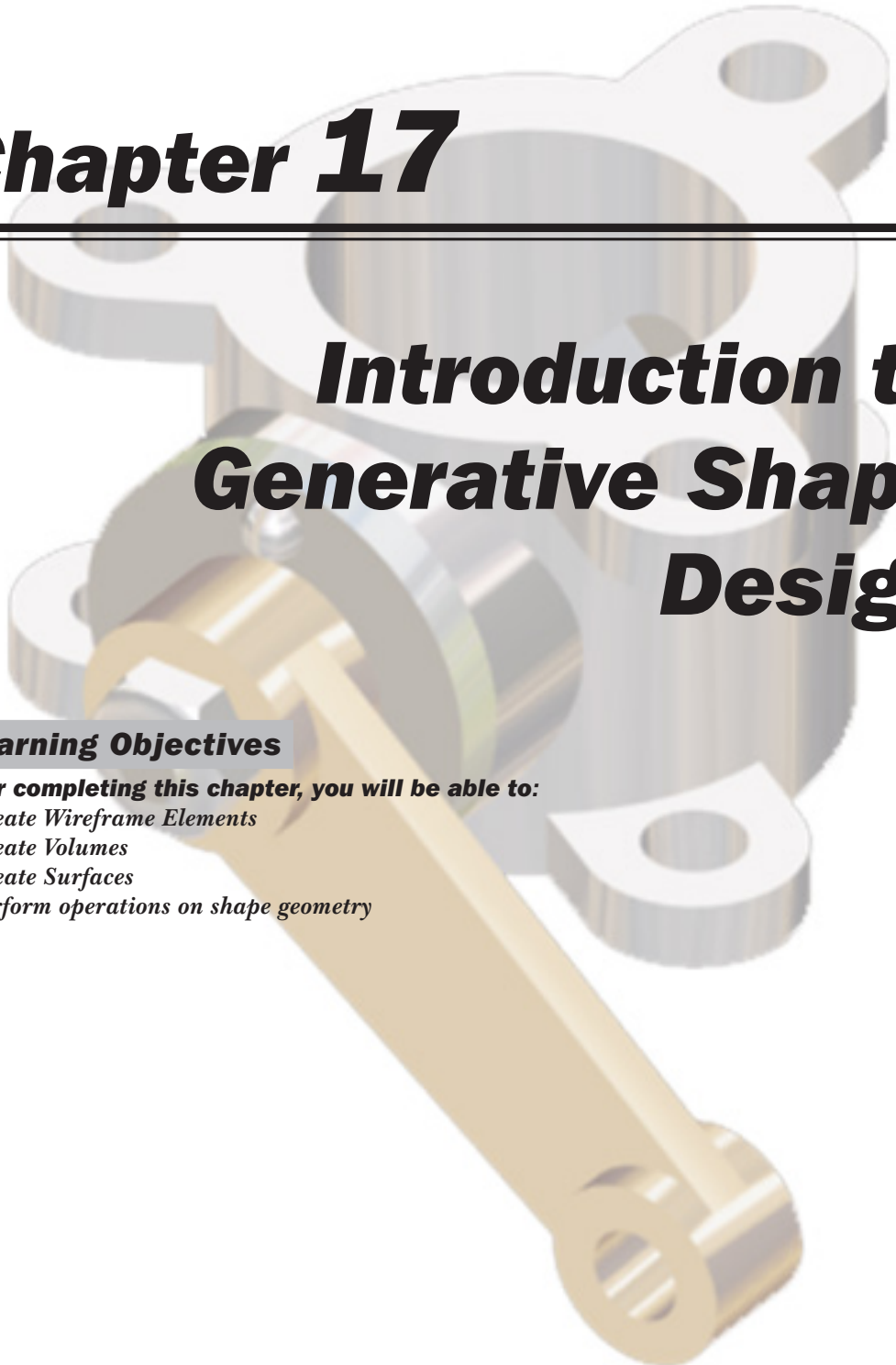

Learning Objectives

After completing this chapter, you will be able to:

- *Create Wireframe Elements*
- *Create Volumes*
- *Create Surfaces*
- *Perform operations on shape geometry*

THE GENERATIVE SHAPE DESIGN WORKBENCH

The Generative Shape Design workbench allows you to quickly model both simple and complex shapes using wireframe and surface features. Because of its wide range of functional sets, it provides a large set of tools for creating and editing shape designs. CATIA V5-Generative Shape Design is a complete surfacing tool for novice and advanced shape designers. Due to its interoperability with other products such as **Part Design** and **FreeStyle Shaper and Optimizer**, it meets the requirements of solid-based hybrid modeling.

In this chapter, you will learn about wireframe, surface, and solid geometry modeling tools to fully capture the design intent.

CREATING WIREFRAME ELEMENTS

Start a new session of CATIA V5 and close the new product file, which is opened by default. Next, choose **Generative Shape Design** from **Start > Shape** in the menu bar to start a new file in the **Generative Shape Design** workbench. On invoking the **Generative Shape Design** workbench, the **Wireframe** toolbar is displayed, as shown in Figure 17-1. The tools in this toolbar are used to create wireframe geometries and curves. These geometries and curves play a major role in creating surfaces. The tools for constructing wireframe geometries are **Line**, **Polyline**, **Circle**, **Spline**, **Helix**, and so on. Some of these tools are discussed in Chapter 10.



Figure 17-1 *The **Wireframe** toolbar*

Creating a Corner

Menubar:	Insert > Wireframe > Corner
Toolbar:	Wireframe > Circle-Conic sub-toolbar > Corner



In the **Generative Shape Design** workbench, the **Corner** tool is used to create an arc of specific radius, which is tangent continuous with two elements. The elements can be wireframe lines or curves, sketch lines or curves, solid edges, surface boundaries, and edges. To create a corner, choose the **Corner** tool from the **Circle-Conic** sub-toolbar of the **Wireframe** toolbar, refer to Figure 17-2; the **Corner Definition** dialog box will be displayed, as shown in Figure 17-3. In this dialog box, the **Corner On Support** option is selected by default in the **Corner Type** drop-down list. Select the **3D Corner** option from the **Corner Type** drop-down list if you want to create a corner between two 3D curves. After selecting the corner type, you need to select a curve or a point as the first element. Select a curve as the first element from the graphics window; the selection will get displayed in the **Element 1** selection box. Next, you will be prompted to select the second curve. Select the second curve in the **Element 2** selection box and preview will be displayed. The **Corner On Vertex** check box is used to remove sharp corners of the selected curve. After selecting this check box, you need to select a point or a curve in the **Element 1** selection box. The **Element 2** selection box, **Trim element 1** check box, and **Trim element 2** check box are disabled when you select the **Corner on Vertex** check box. The **Trim element 1** and **Trim element 2** check boxes are used to trim the referencing curves from the point of tangency. You can also create curves by choosing any one of the options from the contextual menu which is displayed when you right-click in the corresponding selection box in the **Corner Definition** dialog box. The **Support** selection box is used to select the surface on

which the fillet corner is to be placed in case of a non coplanar curve. In this case, the selected elements must lie on the surface. In case there are more than one solution, the corner closest to the selected point will be created. Choose the **Next Solution** button from the **Corner Definition** dialog box to get the desired solution and choose **OK** to create the corner, as shown in Figures 17-4 and 17-5.

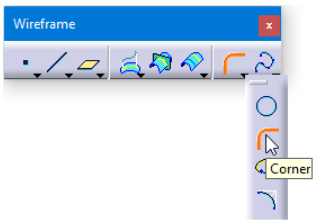

Figure 17-2 *The* ***Circle-Conic*** *sub-toolbar*

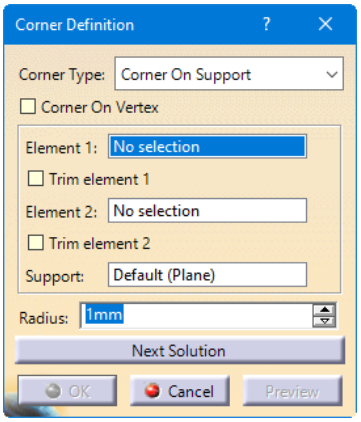

Figure 17-3 *The* ***Corner Definition*** *dialog box*

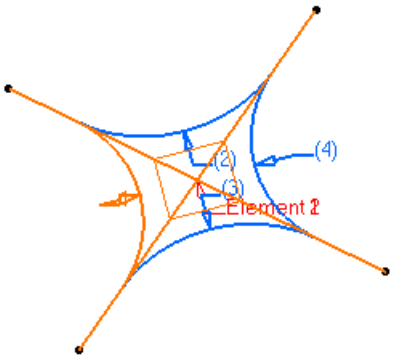

Figure 17-4 *Corner created between two planar elements*

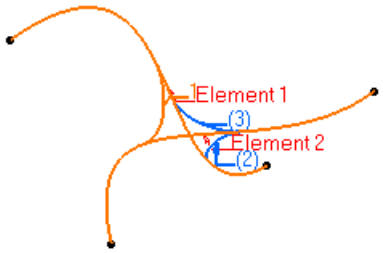

Figure 17-5 *3D corner created between two non-planar elements*

Note

1. If selected elements are coplanar, the corresponding support plane gets selected by default.

2. If selected elements are non coplanar elements then you can select any surface as support geometry.

Creating a Connect Curve

Menubar:	Insert > Wireframe > Connect Curve
Toolbar:	Wireframe > Circle-Conic sub-toolbar > Connect Curve

The **Connect Curve** tool is used to connect two points or two curves with a curve. You can specify tangency and curvature constrains of the connect curve with reference curves. You can also control the transition of the connected curve by specifying the tension factor for the connected curve.

To create a connect curve, choose the **Connect Curve** tool from the **Circle-Conic** sub-toolbar of the **Wireframe** toolbar; the **Connect Curve Definition** dialog box will be displayed, as shown in Figure 17-6. By default, **Normal** is selected in the **Connect type** drop-down list and you will be prompted to select the first point. You can also select the **Base Curve** option from the **Connect type** drop-down list and select a reference curve in the **Base Curve** selection box, if you want to create a connect curve with same orientation as the selected base curve. Now, select a predefined point. Alternatively, you can right-click in the **Point** selection box to create a new point using the options available in the contextual menu. After selecting the first point, you will be prompted to select the first curve. Select the curve in the **Curve** selection box; you will be prompted to select the second point. Select the second point in the **Point** selection box in the **Second Curve** area; you will be prompted to select the second curve, refer to Figure 17-7. Select the second curve in the **Curve** selection box under the **Second Curve** area; the connect curve will be created between the elements. Note that if the selected points are the end points of the reference curves, the curve will be selected by default in the **Curve** selection box. You can apply continuity between the end points of the connect curve by using the options available in the **Continuity** drop-down list. You can also specify a factor of tension in the **Tension** spinner in the **First Curve** and **Second Curve** areas. Select the **Reverse Direction** button to reverse the direction of the connect curve at the tangent end. Choose the **Trim elements** check box to trim the reference curves from the point of tangency.

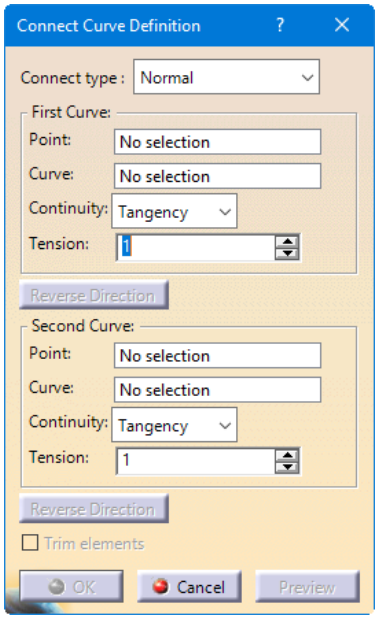

Figure 17-6 *The* ***Connect Curve Definition*** *dialog box*

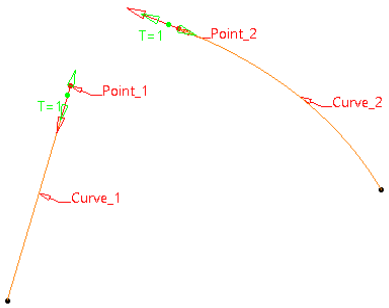

Figure 17-7 *Curves selected to create the connect curve*

Creating a Conic Curve

Menubar:	Insert > Wireframe > Conic
Toolbar:	Wireframe > Circle-Conic sub-toolbar > Conic

The **Conic** tool is used to create conic-type curves such as parabolas, ellipses, or hyperbolas. To create a conic curve, choose the **Conic** tool from the **Circle-Conic** sub-toolbar of the **Wireframe** toolbar; the **Conic Definition** dialog box will be displayed, as shown in Figure 17-8. The options in this dialog box are discussed next.

Support

In this selection box, you can select a plane or planar surface as support geometry on which the curve is to be placed. You can also use the options from the contextual menu by right-clicking in the **Support** selection box to create a new plane or a planar surface.

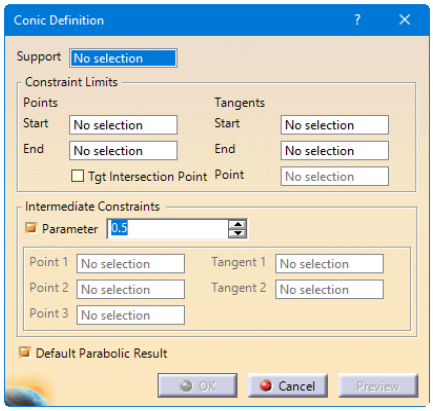

Figure 17-8 *The* ***Conic Definition*** *dialog box*

Constraint Limits

In the **Constraint Limits** area, you can specify the start and end points for the conic curve in the **Start** and **End** selection boxes under the **Points** option. Next, you need to define the tangency definitions for the corresponding start and end points in the **Start** and **End** selection boxes under the **Tangents** option. Usually, the tangent of the start and end points is defined by a line. If you select the **Tgt Intersection Point** check box, the **Point** selection box gets activated and the **Start** and **End** selection boxes get deactivated. Now, choose a point to define an intersection point of the start and end tangents.

Intermediate Constraints

The **Intermediate Constraints** area in the **Conic Definition** dialog box is used to define the conic parameter between the start and end points of the conic curve. Select the **Parameter** check box and enter a value between 0 to 1. The value in the **Parameter** spinner will determine whether the resulting curve will be a parabola, ellipse or hyperbola. If the **Parameter** check box is not selected, then you can select guide points for the conic curve using the **Point 1**, **Point 2**, and **Point 3** selection boxes. These points have to be selected in a logical order so that the curve passes through the start point, then through Point 1, Point 2, Point 3 and then the end point. Note that it is not necessary to specify all three points for the resulting curve. If you have selected only two points using the **Point 1** and **Point 2** selection boxes then you can assign tangency constraints to the points using the **Tangent 1** and **Tangent 2** selection boxes. By default, the **Default Parabolic Result** check box is already selected. You can clear the **Default Parabolic Result** check box if you do not want the resulting conic curve to be parabolic.



Note

Conic curves are defined by five constraints: start and end points, start and end tangents, passing points or a parameter. The elements necessary to define these curves are two points, start and end tangents, and a parameter; two points, start and end tangents, and a passing point, two points, a tangent intersection point, and a parameter; two points, a tangent intersection point, and a passing point; four points and a tangent; or five points.

Creating a Spiral Curve

Menubar:	Insert > Wireframe > Spiral
Toolbar:	Wireframe > Curves sub-toolbar > Spiral



The **Spiral** tool is used to create spiral curves with the help of center point and support surface or plane. To create a spiral curve, choose the **Spiral** tool from the **Curves** sub-toolbar of the **Wireframe** toolbar; the **Spiral Curve Definition** dialog box will be displayed, as shown in Figure 17-9.

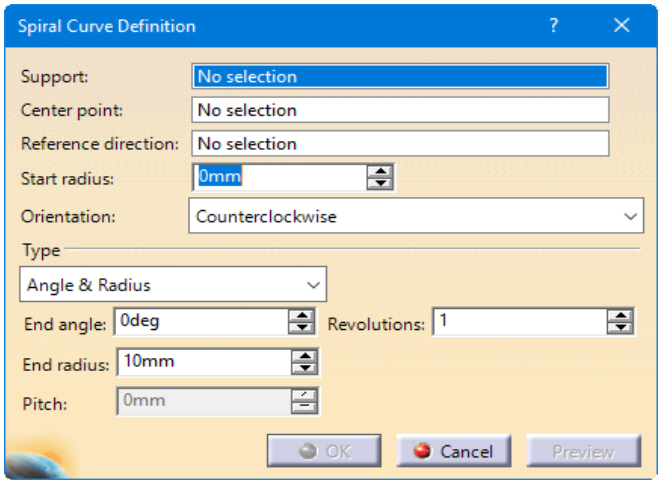

***Figure 17-9** The **Spiral Curve Definition** dialog box*

Select a plane or planar surface as support for spiral curve from the graphics window; the selection will get displayed in the **Support** selection box. Next, select a point to define the center of the spiral in the **Center point** selection box. Select a straight line, edge boundary, or plane in the **Reference direction** selection box. The start point of the spiral curve will lie in the reference direction selected. Next, you need to specify a value for the start radius in the **Start radius** edit box. Note that the starting point of the spiral will be positioned in the reference direction at a distance from the center point that is defined as the start radius of the spiral curve. Select the orientation of the spiral as **Clockwise** or **Counterclockwise** from the **Orientation** drop-down list. The options in the **Type** area are used to define the end angle, end radius, pitch and number of revolutions for the resulting spiral. Next, choose the **OK** button to generate the spiral curve.

Creating a Spine Curve

Menubar: Insert > Wireframe > Spine
Toolbar: Wireframe > Curves sub-toolbar > Spine



The **Spine** tool is used to create spines and curves which are normal to a series of ordered planes or planar curves. These spines are useful for controlling the swept and lofted surfaces. With the help of a spine, you can orient the swept profile normal to the spine.

Choose the **Spine** tool from the **Curves** sub-toolbar; the **Spine Curve Definition** dialog box will be displayed, as shown in Figure 17-10. Also you will be prompted to select a plane, curve or a start point.

Select the planes, planar sections, and non-planar sections in a logical order under the **Section/Plane** selection area and choose the **OK** button to create the spine curve, refer to Figure 17-11. However, if you want to specify the starting point of the spine, select a point, vertex or extremity using the **Start point** selection box, the resulting spine will originate from the selected point. To create a spine using guide curves, click in the **Guide** selection area and successively select two or more guiding curves; the preview of the resulting spine is immediately displayed in the geometry area.

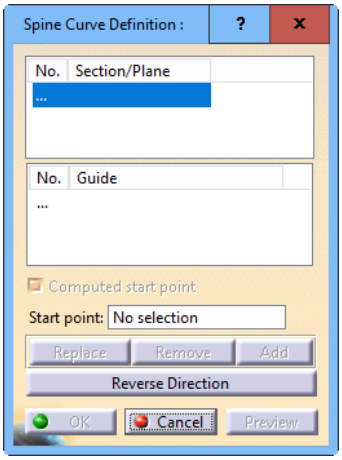

Figure 17-10 *The* ***Spine Curve Definition*** *dialog box*

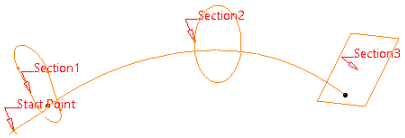

Figure 17-11 *The Spine Curve created using planar sections and planes with a start point*

Creating an Isoparametric Curve

Menubar: Insert > Wireframe > Isoparametric Curve
Toolbar: Wireframe > Curves sub-toolbar > Isoparametric Curve



The **Isoparametric Curve** tool is used to create curves that are associated with a support surface and are isoparametric in nature. Whenever the support surface is modified or updated, the isoparametric curve also gets updated itself. Choose the **Isoparametric curve** tool from the **Curve** sub-toolbar; the **Isoparametric curve** dialog box will be displayed, as shown in Figure 17-12. Select a surface from the graphics window; the selection will get displayed in the **Support** selection box. Next, you will be prompted to select a point. You can select a point by clicking at the desired location on the support surface or you can create a point using the point button available next to the **Point** selection box. After selecting the point, a curve with a manipulator upon the surface will be displayed, as shown in Figure 17-13. By default, line is selected in the **Direction** selection box but you can also create a line for direction reference by using the **Line** button next to the **Direction** selection box. Choose the **Swaps Curve Direction** button if you want to swap U and V parameter values of the curve, refer to Figure 17-14. In case you are selecting multiple joined surfaces as support geometry, the **SwappedCells** selection box will display the cells where the isoparametric propagation direction has been swapped from the nearest isoparametric propagation direction to the farthest isoparametric propagation direction, as shown in Figure 17-15.

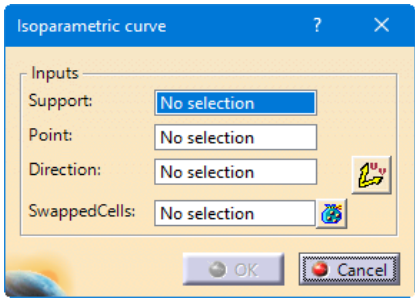

Figure 17-12 *The* ***Isoparametric curve*** *definition dialog box*

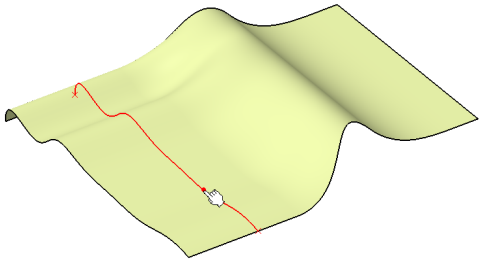

Figure 17-13 The isoparametric curve created on the surface

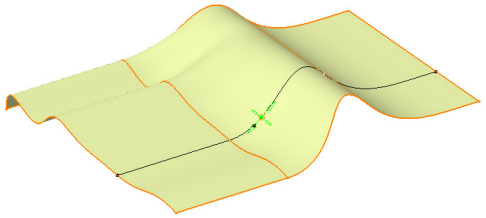

*Figure 17-14 The isoparametric curve created using the **Swaps UV Direction** option*

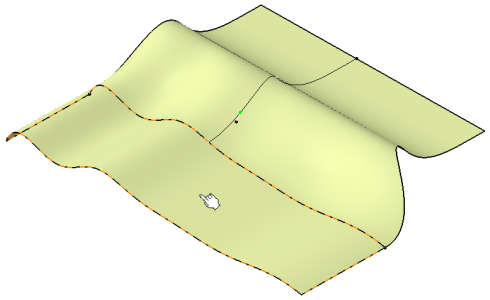

*Figure 17-15 The isoparametric curve created using the **SwappedCells** option*

Note

In Figure 17-15, the isoparametric propagation direction has been swapped from the nearest isoparametric propagation direction to the farthest isoparametric propagation direction in the selected cell.

Creating a Parallel Curve

Menubar:	Insert > Wireframe > Parallel Curve
Toolbar:	Wireframe > Curve Offsets sub-toolbar > Parallel Curve

The **Parallel Curve** tool is used to create curves that are parallel to the referencing elements such as curves and edges. The created parallel curve follows the selected support surface. The distance between the curves can be defined by a value, a law, or with reference to a selected point or vertex. Choose the **Parallel Curve** tool from the **Curve Offsets** sub-toolbar of the **Wireframe** toolbar; the **Parallel Curve Definition** dialog box will be displayed, as shown in Figure 17-16.

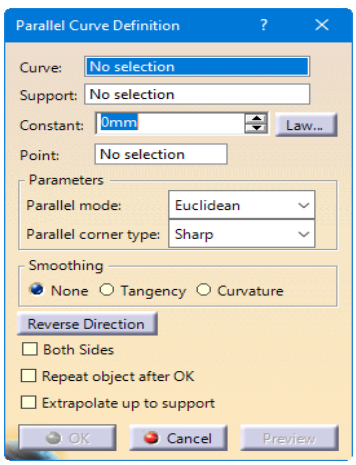

*Figure 17-16 The **Parallel Curve Definition** dialog box*

To create a parallel curve, select a reference curve from which the parallel distance will be measured. Next, select the support surface in the **Support** selection box. Enter an offset value in the **Constant** edit box. The offset behavior along the guide curve can also be specified by a law defined using the

Law button next to the **Constant** edit box. If you want the curve to pass through a selected point then select the point in the **Point** selection box; the **Constant** edit box will get disabled and the curve will be generated passing through the selected point. In the **Parameters** area, you can select the **Euclidean** or **Geodesic** option in the **Parallel mode** drop-down list. In the Euclidean mode, the shortest path between the parallel curve and the reference curve is measured while in the Geodesic mode, the offset distance is measured along the support surface, as shown in Figure 17-17 and 17-18. If you select the **Euclidean** option in the **Parallel mode** drop-down list, you can select the **Sharp** or **Round** option from the **Parallel corner type** drop-down list. Next, you can define smoothing parameters in the **Smoothing** area of the **Parallel Curve Definition** dialog box. If you select the **None** radio button, the resulting curve will not be smoothened. While selecting the **Tangency** radio button, the tangent continuity will be improved and on selecting the **Curvature** radio button, the curvature continuity will be improved. The **Deviation** edit box and the **3D Smoothing** check box in the **Smoothing** area will become available on selecting the **Tangency** or the **Curvature** radio button, as shown in Figure 17-19. Select the **3D Smoothing** check box for the better continuity of the resultant curve.

Choose the **Reverse Direction** button from the graphics area to reverse the direction of the generated curve. Alternatively, you can also click the arrow on the reference curve from the geometry area to reverse the direction of the curve. If you choose the **Both Sides** check box, parallel curves will be created at the same time on both sides of the reference curve.

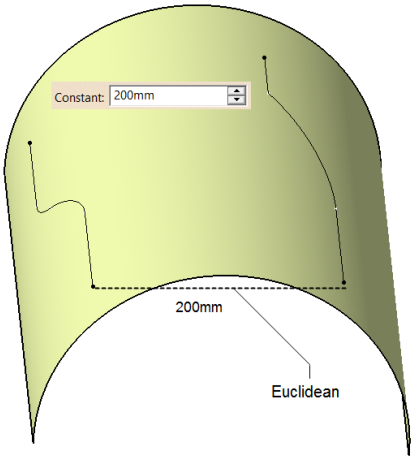

Figure 17-17 *The distance measured in the Euclidean mode*

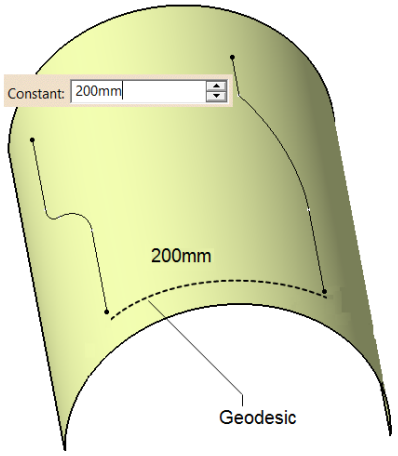

Figure 17-18 *The distance measured in the Geodesic mode*

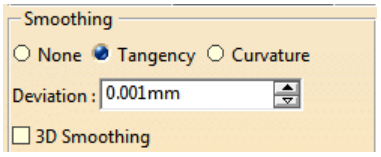

Figure 17-19 *The* ***Deviation*** *edit box*

Creating a Rolling Offset

Menubar: Insert > Wireframe > Rolling Offset
Toolbar: Wireframe > Curve Offsets sub-toolbar > Rolling Offset



The **Rolling Offset** tool is used to create a rolling curve at an offset distance from a reference curve. Choose the **Rolling Offset** tool from the **Curve Offsets** sub-toolbar of the **Wireframe** toolbar; the **Rolling Offset Definition** dialog box will be displayed, as shown in Figure 17-20. After invoking the dialog box, you are prompted to select curves for rolling offset. Select the curves from the graphics window; the selection will get displayed in the **Curves** selection box. Next, you will be prompted to select the support surface. Note that you can select multiple items at a time by clicking on the button next to the **Curves** selection box. Next, select a surface as support geometry in the **Support** selection box. If the reference curve is located on a planar surface then the support geometry is automatically selected, and if the reference curve is located on a non-planar surface, you will have to manually select the surface as the support geometry. Next, specify an offset value in the **Offset** edit box and choose the **OK** button to complete the definition of the rolling offset curve, as shown in Figure 17-21.

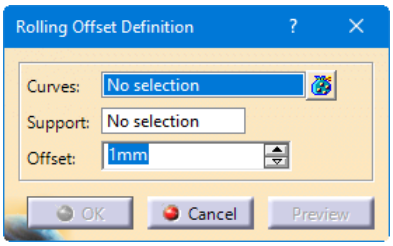

***Figure 17-20** The **Rolling Offset Definition** dialog box*

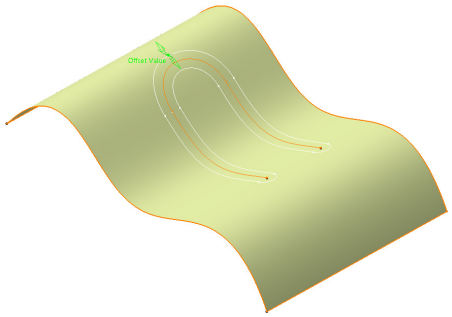

***Figure 17-21** The **Rolling Offset** curve created upon a surface*

Creating a 3D Curve Offset

Menubar: Insert > Wireframe > 3D Curve Offset
Toolbar: Wireframe > Curve Offsets sub-toolbar > 3D Curve Offset



The **3D Curve Offset** tool is used to create parallel curves in a defined direction. The parallel curve is created in a specified direction on the basis of tangent continuous curves, boundaries, or edges. Choose the **3D Curve Offset** tool from the **Curve Offsets** sub-toolbar of the **Wireframe** toolbar; the **3D Curve Offset Definition** dialog box will be displayed, as shown in Figure 17-22.

Select a reference curve using the **Curve** selection box; you will be prompted to select the pulling direction. Select a plane or a line as the reference direction in the **Pulling direction** selection box or right-click in the **Pulling direction** selection box to invoke the contextual menu for creating a direction reference. The direction of offset will be aligned to the selected direction. Next, enter a value for the offset in the **Offset** edit box and choose the **Preview** button. Choose the **Reverse direction** button if the curve is not displayed in the desired direction after selecting the **Preview** button. In the **3D corner parameters** area, you can define the parameters for the radius and tension for the generated curve. If the offset value is larger than the curve radius,

the generated curve may obtain a sharp corner as a result. You can enter a value in the **Radius** field to remove the corner to improve the curve propagation, refer to Figure 17-23. Enter a value in the **Tension** edit box to specify the tangency effect with neighboring curves at the location of radius transition.

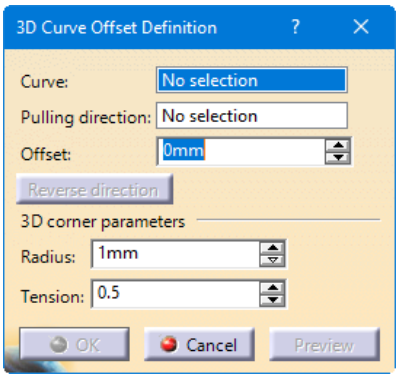

Figure 17-22 *The **3D Curve Offset Definition** dialog box*

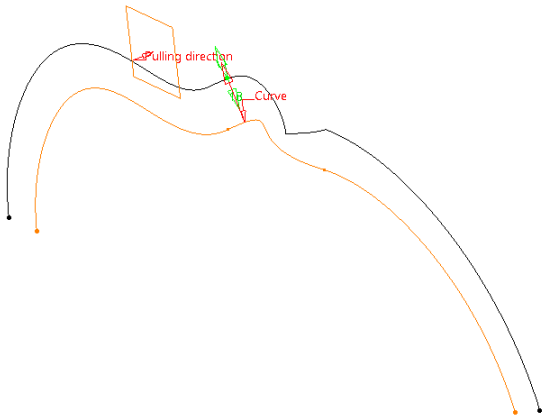

Figure 17-23 *The 3D curve offset created with radius and tension factor specified*

Creating a Combine Curve

Menubar: Insert > Wireframe > Combine
Toolbar: Wireframe > Project-Combine sub-toolbar > Combine

The combine curve is an intersection curve between the extrusion of the selected curves in virtual perpendicular directions. To create a combine curve, choose the **Combine** tool from the **Project-Combine** sub-toolbar, the **Combine Definition** dialog box will be displayed, as shown in Figure 17-24. Also, you will be prompted to select the curves to combine. Select the curves in the **Curve1** and **Curve2** selection box and choose the **OK** button to create the combine curve. By default, **Normal** is selected in the **Combine type** drop-down list. If you select **Along directions** in the **Combine type** drop-down list, you need to specify the directions for each curve in the **Direction1** and **Direction2** selection boxes. The combination of two curves is shown in Figure 17-25.

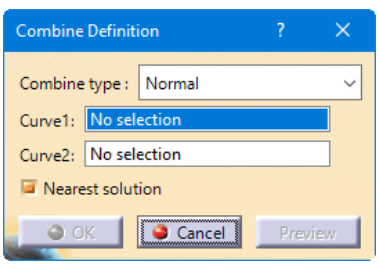

Figure 17-24 *The **Combine Definition** dialog box*

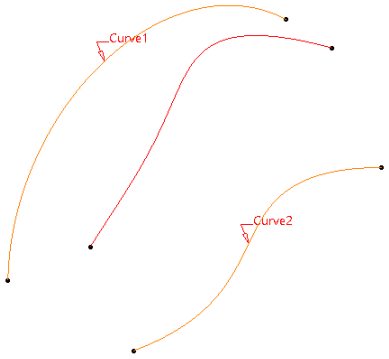

Figure 17-25 *The Combine curve created from curve 1 and curve 2*

Creating a Reflect Line

Menubar:	Insert > Wireframe > ReflectLine
Toolbar:	Wireframe > Project-Combine sub-toolbar > ReflectLine



Reflection lines and curves can be used to create guide curves or silhouettes and to check surface quality. Choose the **ReflectLine** tool from the **Project-Combine** sub-toolbar of the **Wireframe** toolbar; the **Reflect Line Definition** dialog box is displayed, as shown in Figure 17-26. Also, you are prompted to select the support to build the reflect line.

In the **Type** area of the **Reflect Line Definition** dialog box, the **Cylindrical** radio button is selected by default. Cylindrical lines tend to reflect curves with a light source at infinite distance whereas Conical lines tend to reflect curves with a point light source located at a finite distance. Select a surface in the **Support** selection box; you will prompted to select the reflect line direction. Next, select a direction reference using the **Direction** selection box. Specify the value of angle in the **Angle** edit box. By default, the **Normal** radio button is selected in the **Angle Reference** area. If you want the reflect line to be tangent to the support and the selected direction, choose the **Tangent** radio button and choose the **OK** button to create the reflect line, as shown in Figure 17-27.

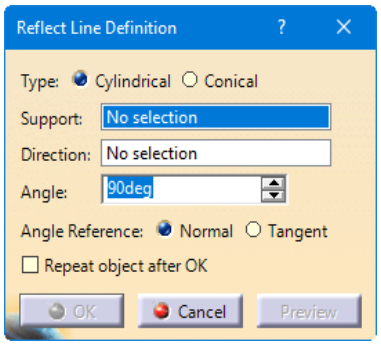

Figure 17-26 *The* ***Reflect Line Definition*** *dialog box*

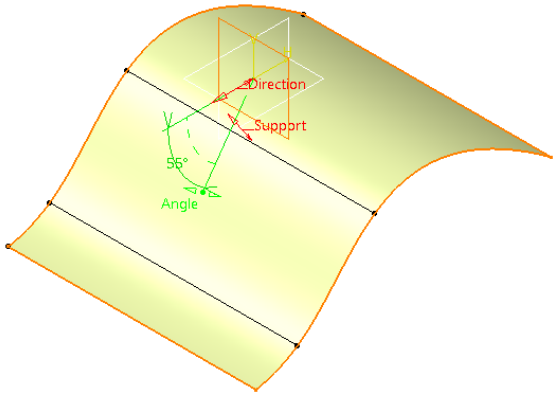

Figure 17-27 *The Cylindrical type reflect lines created upon a surface*

Note that if you select the **Conical** radio button from the **Type** area, the **Direction** selection box will change into the **Origin** selection box and you need to select a point as the origin of the light source. If the resulting feature is divided into sub-elements, choose the **OK** button; the **Multi-Result Management** dialog box will appear, as shown in Figure 17-28. You can use this dialog box to decide which sub-element is to be kept. When you choose the **OK** button in the **Multi-Result Management** dialog box, the **Near/Far Definition** dialog box appears, as shown in Figure 17-29. In this dialog box, select the **Near** radio button to create an entity nearest to the reference element or the **Far** radio button to create an entity farthest from the reference element. Next, select the element that is made up from several elements. Choose a reference element whose position is either close or far from the sub-element that you want to create and choose the **OK** button to create the element.

Note

*The **Near/Far Definition** dialog box is automatically displayed when a non-connex element is detected at the time of creation. You can directly choose the element to be created from the dialog box.*

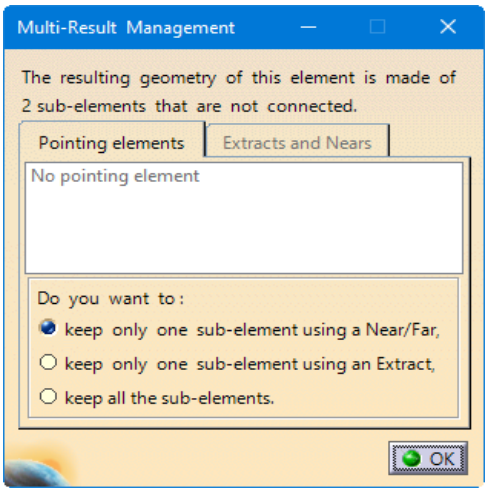

***Figure 17-28** The **Multi-Result Management** dialog box*

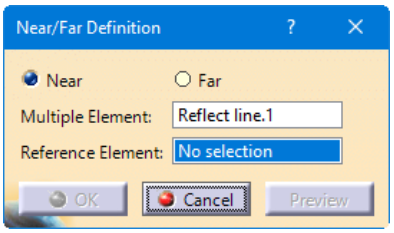

***Figure 17-29** The **Near/Far Definition** dialog box*

Creating Silhouette

Menubar:	Insert > Wireframe > Silhouette
Toolbar:	Wireframe > Project-Combine sub-toolbar > Silhouette

Silhouette is a 3D wireframe curve. The silhouette command computes reflect lines and extracts edges that define the contour and removes non-visible areas of the contour. Select **Silhouette** in the **Project-Combine** sub-toolbar in the **Wireframe** toolbar, the **Silhouette Definition** dialog box will be displayed, as shown in Figure 17-30.

In this dialog box, select the type of silhouette to be created under the **Type** area. Cylindrical type of silhouette is created by an infinite light source while Conical type of silhouette is created with the help of a finite point light source. On invoking the dialog box, you will be prompted to select a support. Select the support geometry in the **Elements** selection box. Note that you can select multiple items at a time by clicking on the button next to the **Elements** selection box. Next, select a point, axis or a plane in the **Direction** selection box. Note that if you select the **Cylindrical** radio button in the **Type** area, you need to select an axis or plane as the direction. If you select **Conical** from the **Type** area, you need to select a point in the **Origin** selection box. In case of cylindrical silhouette, select a planar element in the **Projection plane** selection box; the filtered silhouettes will be projected on this plane. In case of a cylindrical silhouette, select the **1D** or **2D** radio button from the **Result** area to create the desired silhouette. Select the options in the **Result filters** area to obtain the desired result. Selecting the **External** check box will create the external silhouette edges. You can select the **Internal** check box to create the internal silhouette edges. To create the silhouette edges other than internal and external ones, choose the **Inner** check box in the **Result filters** area. Next, choose the **OK** button to create the silhouette, as shown in Figure 17-31.

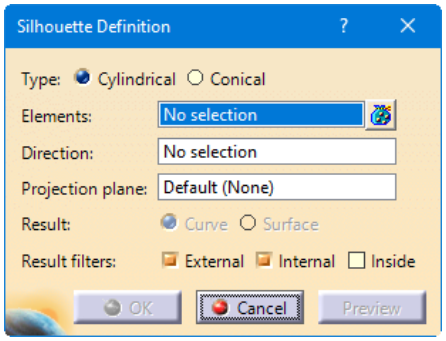

*Figure 17-30 The **Silhouette Definition** dialog box*

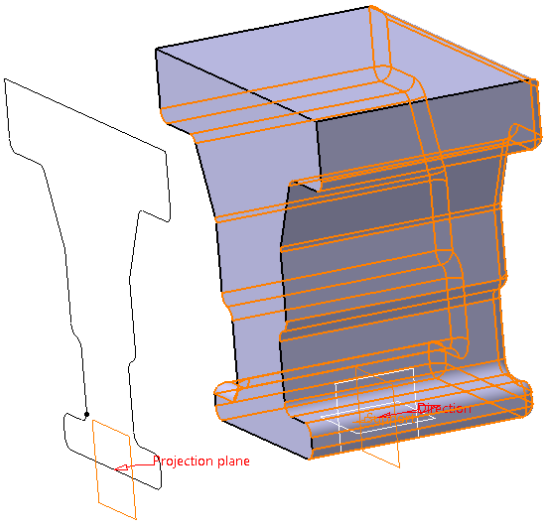

*Figure 17-31 The **Cylindrical Silhouette** created on a plane*

CREATING VOLUMES

The volume tools are available in the **Generative Shape Design** workbench. These tools allow you to use some of the part design features without changing workbenches. Any volumetric feature can be modified into another volumetric feature with the help of modification and transformation features. This gives the user a better flexibility to integrate solid modelling with surface features. The methods for creating volumes are discussed next.

Creating a Volume Extrude

Menubar:	Insert > Volumes > Volume Extrude
Toolbar:	Volumes > Volume Extrude



The **Volume Extrude** tool is used to create a volume by extruding a closed planar profile or surface. Choose the **Volume Extrude** tool from the **Volumes** toolbar; the **Extruded Volume Definition** dialog box will be displayed, as shown in Figure 17-32. Select the profile to be extruded from the graphics window; the selection will get displayed in the **Profile** selection box. Next, specify the direction of extrusion in the **Direction** selection box. You can select a line to take its orientation as the extrusion direction or a plane to take its normal as extrusion direction. After selecting the direction reference, you need to specify the extrusion limits. Set the extrusion limits by selecting the options from the **Type** drop-down lists under the **Limit 1** and **Limit 2** areas. If you select **Dimension** in the **Type** drop-down list, you need to define the value of extrusion in the **Dimension** spinner. If you select **Up-to element** in the **Type** drop-down list, you need to select a geometry as the limit of extrusion. The geometry can be a point, a plane, or a surface. Note that the dimension values can also be specified with the **Up-to element** option, as shown in Figure 17-33. Next, choose the **OK** button from this dialog box to complete the feature.

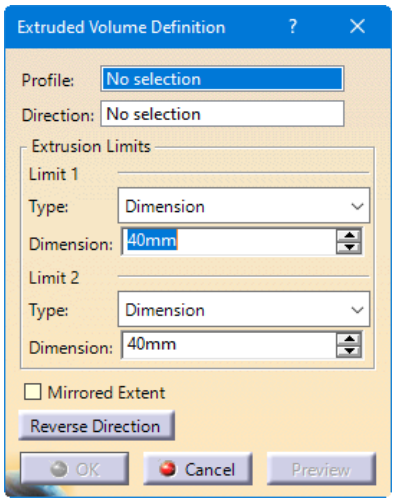

Figure 17-32 *The* ***Extruded Volume Definition*** *dialog box with limits selected as* ***Dimension***

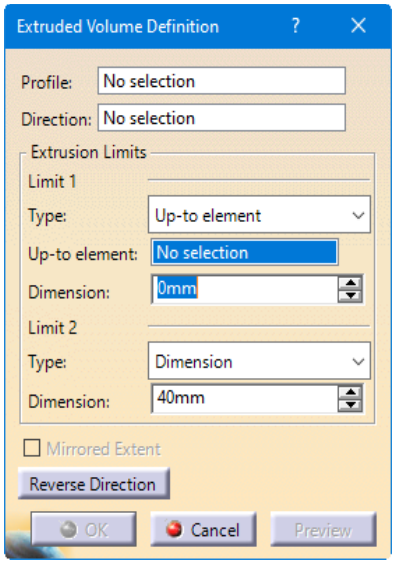

Figure 17-33 *The* ***Extruded Volume Definition*** *dialog box with limits selected as* ***Up-to element***

Creating a Volume Revolve

Menubar: Insert > Volumes > Volume Revolve
Toolbar: Volumes > Volume Revolve



The **Volume Revolve** tool is used to create a volume by revolving a non self-intersecting closed planar profile, a surface, or a sketch about an axis. Choose the **Volume Revolve** tool from the **Volumes** toolbar, the **Revolve Volume Definition** dialog box will be displayed, as shown in Figure 17-34. Select the profile, surface, or sketch to be revolved; you will be prompted to select a line as a revolution axis. Next, select an axis of revolution in the **Revolution axis** selection box. Now, select required option from the **Type** drop-down list. By default, the **Dimension** option is selected in the **Type** drop-down list and you will be prompted to specify the angular limit value. Specify the required angular limit values in the **Angle 1** and **Angle 2** spinners in the **Limit 1** and **Limit 2** area respectively. You can also use graphic handles to define angular limits. If you select the **Up-to element** option from the **Type** drop-down list; the **Up-to element** selection box will be displayed under this drop-down list and you will be prompted to specify a surface, a point or a plane to limit the revolution. Specify the required limit. Next, choose the **OK** button to complete the feature.

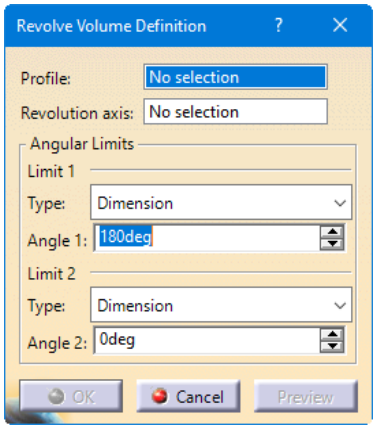

Figure 17-34 *The* ***Revolve Volume Definition*** *dialog box*

Creating the Multi-Sections Volume

Menubar: Insert > Volumes > Multi-Sections Volume
Toolbar: Volumes > Multi-Sections Volume

The **Multi-Sections Volume** tool is used to create a multi-sections volume by sweeping one or more closed section curves along an automatically computed or user-defined spine. The volume can be made to follow one or more guide curves. Choose the **Multi-Sections Volume** tool from the **Volumes** toolbar; the **Multi-Sections Volume Definition** dialog box will be displayed, as shown in Figure 17-35.

Select one or more planar curves in the curve selection area. A closing point can be selected for closed section curves. Next, select the continuity type for each support surface. By default, the continuity is set to Tangent. You can select one or more guide curves in the **Guides** tab of the **Multi-Sections Volume Definition** dialog box. Note that the guide curves must intersect each section curve and must be point continuous. You can define smoothing parameters in the **Smooth parameters** area. Select the **Angular correction** option to smooth the lofting along the reference guide curves. This may be needed when small discontinuities are detected with respect to the spine tangency or the reference guide curve's normal. Specify a deviation value to smooth the loft by deviating it from the guide curve. Next, choose **OK** to create the multi-sections volume.

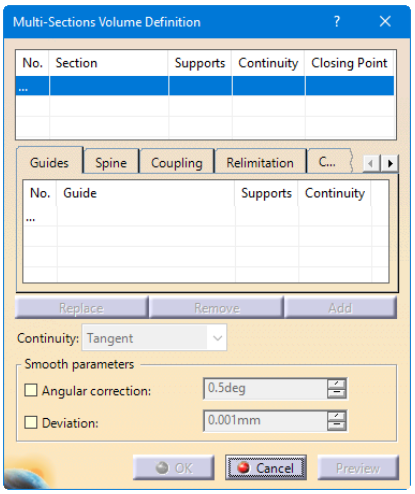

***Figure 17-35** The **Multi-Sections Volume Definition** dialog box*

Note

*For further information about the other tabs and options in the **Multi-Sections Volume Definition** dialog box, refer to Chapter 9.*

Creating a Volume Sweep

Menubar: Insert > Volumes > Volume Sweep
Toolbar: Volumes > Volume Sweep

The **Volume Sweep** tool is used to create the swept volumes that use an explicit or an implicit circular or linear profile. The swept volumes are created by sweeping a closed profile having spines normal to the profile plane while considering user-defined parameters such as guide curves and reference elements. Choose this tool from the **Volumes** toolbar; the **Swept Volume Definition** dialog box will be displayed, as shown in Figure 17-36. The options in this dialog box are discussed next.

Profile Type

In this area, three buttons corresponding to three profile types are available, **Explicit**, **Line** and **Circle**. These buttons are discussed next.

Explicit

Choose this button to create swept surfaces using explicit user-defined profile. In the **Subtype** drop-down list, three options are available which are discussed next.

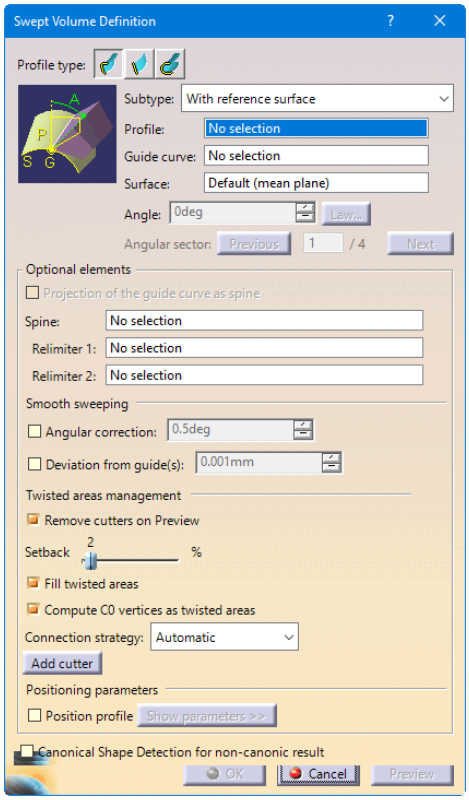

Figure 17-36 *The* ***Swept Volume Definition*** *dialog box*

With reference surface: By default, this option is selected in the **Subtype** drop-down list. Select a profile with the help of the **Profile** selection box. Next, you need to select a guide curve in the **Guide curve** selection box. Choose the **Preview** button to view the swept volume, as shown in Figure 17-37. You can also select a surface to control the position of the profile during sweep. By default, the reference surface is the mean plane of the spine.

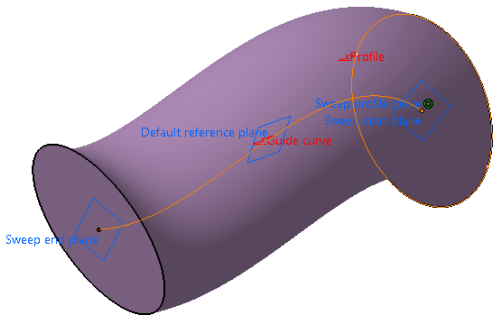

Figure ***17-37*** *The swept volume created using the* ***With reference surface*** *option*

With two guide curves: When you select the **With two guide curves** option in subtype drop-down list, the options in the **Swept Volume Definition** dialog box will get modified accordingly, refer to Figure 17-38. Select the profile to be swept. Next, you need to select the guide curves using the **Guide curve 1** and **Guide curve 2** selection boxes. Choose **Preview** to view the swept volume, as displayed

in Figure 17-39. By default, the anchor point is calculated by itself but you can also specify anchor points for each guide separately. These anchor points are intersection points between the guides and the profile's plane or the profile itself through which the guiding curves will pass.

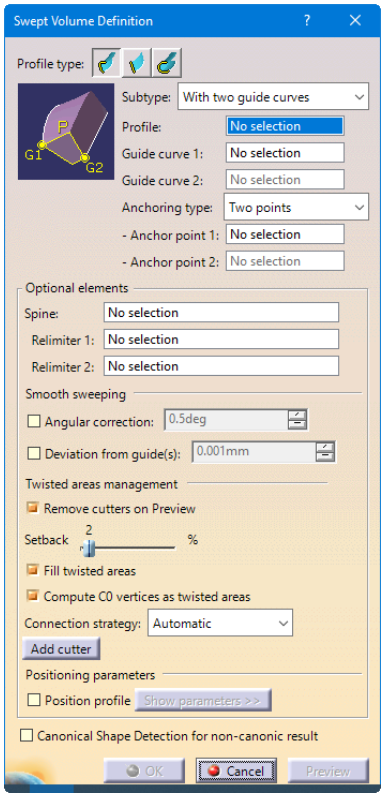

Figure 17-38 *The* ***Swept Volume Definition*** *dialog box on selecting the* ***With two guide curves*** *option*

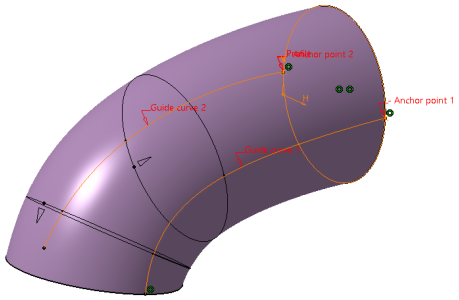

Figure 17-39 *The swept volume created using the* ***With two guide curves*** *option*

You can select the **Two points** or **Point and direction** option in the **Anchoring type** drop-down list. If you select **Two points** then you need to select anchor points on the profile that will match the **Guide curve 1** and **Guide curve 2** respectively. In case the profile is an open profile, these points are optional and the end points of the profile are used as anchoring. If you select the **Point and direction** option in the **Anchoring type** drop-down list, you need to select an anchor point on the profile which will match the Guide curve 1 and anchor direction.

With pulling direction: On selecting this option, a modified **Swept Volume Definition** dialog box will be displayed, as shown in Figure 17-40. This option is equivalent to the **With reference surface** option with a reference plane normal to the pulling direction. In this dialog box, select the profile that is to be swept from the **Profile** selection box. Next, select a guide curve in the **Guide curve** selection box and a direction reference in the **Direction** selection box and choose **OK** to create the sweep volume, as shown in Figure 17-41.

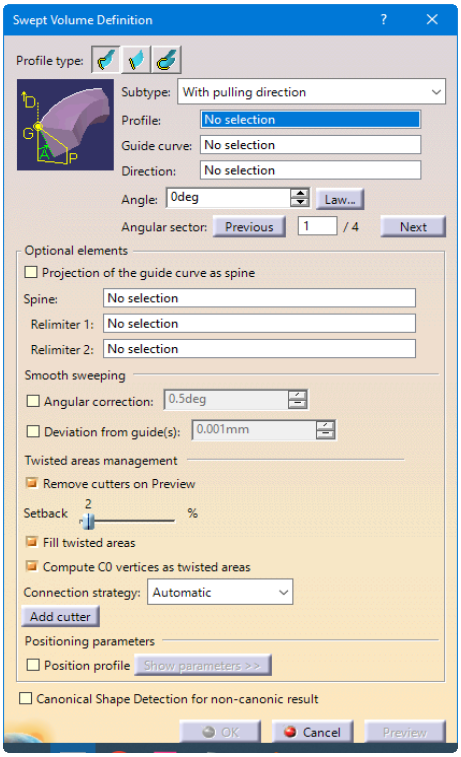

Figure 17-40 *The* ***Swept Volume Definition*** *dialog box displayed on selecting the* ***With pulling direction*** *option*

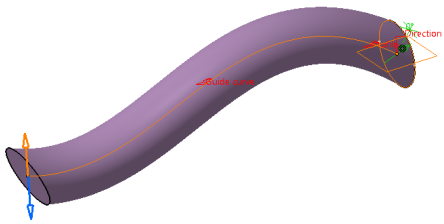

Figure 17-41 *The swept volume created using the* ***With pulling direction*** *option*

Line (Linear Profile)

This type of profile is used to create swept volumes with a draft in a specified direction. Choose the **Line** button in the **Profile type** area if not already chosen; the **Swept Volume Definition** dialog box will be displayed, as shown in Figure 17-42. In this dialog box, **With draft direction** is selected as the default subtype. Now, select a closed planar curve or any surface (planar or non planar) as the guide curve in the **Guide** selection box and a direction reference (a line, a plane, or a component) in the **Draft direction** selection box. In the Draft computation mode, select the **Square** or **Cone** radio button to specify the draft method. The Square mode uses a plane normal to the draft direction as the reference surface and the projection of the guide curve onto this plane is used as the spine. In the Cone mode, envelope of cones are defined along a given curve. You can specify an angular definition for the sweep. In the **Wholly defined** tab, the angular value varies during the whole sweeping operation. In the **G1-Constant** tab, a different draft value for every G1 section can be specified. In the **Location values** tab, angular values can be defined at specified points located on the curve. You can also choose the **Next** or **Previous** button in the **Angular sector** area to preview the four solutions based on the values given for the angle and length, refer to Figure 17-43.

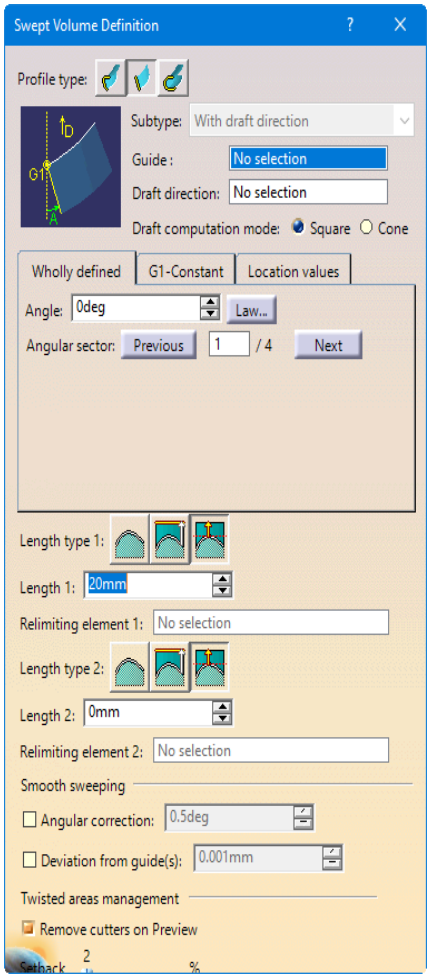

Figure 17-42 *The* ***Swept Volume Definition*** *dialog box with the* ***With draft direction*** *option selected*

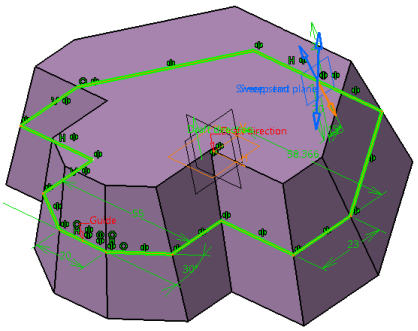

Figure 17-43 *The sweep created using xy plane as draft direction and 15 deg as draft angle*

If required, you can define relimiters (points or planes) in order to longitudinally reduce the domain of the sweep, refer to Figure 17-44.

In the **Smooth sweeping** area, you can choose the **Angular correction** and the **Deviation from guide(s)** check boxes and specify a correction and deviation value next to their respective edit boxes.

In the **Twisted areas management** area, on selecting the **Remove cutters on Preview** check box, the twisted areas will be removed from the swept volume.



Note

The ***Location values*** *tab is only activated in the square computation mode and will work only for G1 curves.*

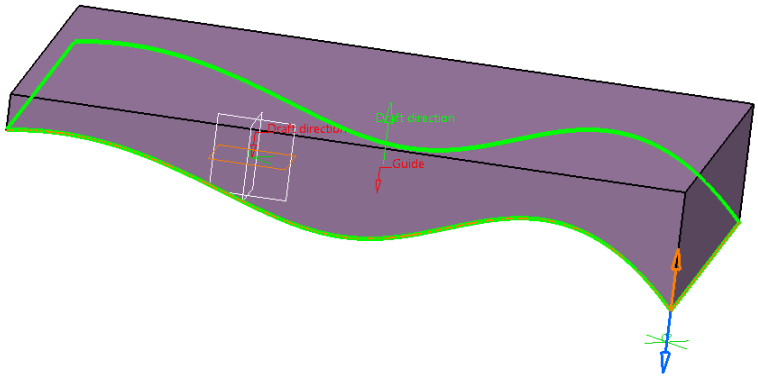

Figure 17-44 *The sweep created using the* ***From curve*** *option*

Circle (Circular Profile)

The **Circle** profile type creates swept volumes using implicit circular profiles. Choose the **Circle** button from the **Profile type** area of the **Swept Volume Definition** dialog box; the **Swept Volume Definition** dialog box will be displayed, as shown in Figure 17-45. In this dialog box, two options are available in the **Subtype** drop-down, **Center and reference curve** and **Center and radius**.

For the Center and reference curve subtype, select a center curve and a reference curve with the help of their respective selection boxes. You may also specify a fixed radius if required. Choose **OK** to create the swept volume, as shown in Figures 17-46 and 17-47.

For the Center and radius subtype, select a center curve in the **Center curve** selection box. Specify a radius value and choose **OK** to create the swept volume. The swept volume created using the **Center and radius** subtype is shown in Figure 17-48.

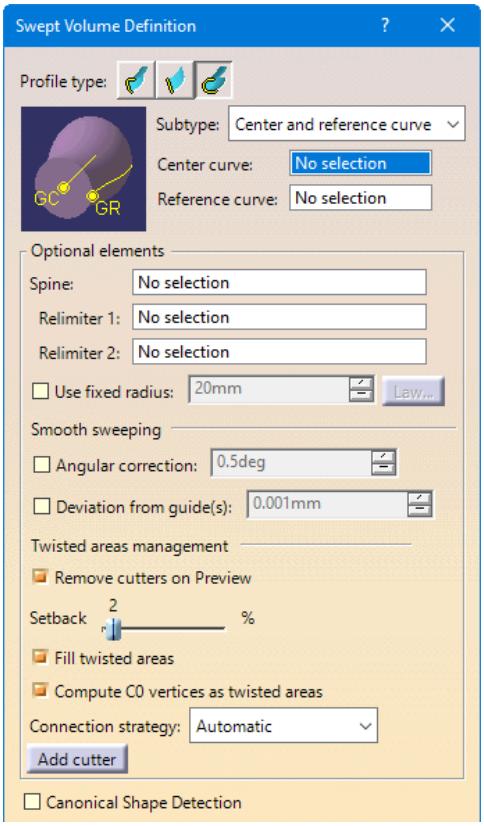

Figure 17-45 *The* ***Swept Volume Definition*** *dialog box with the* ***Circle*** *button selected*

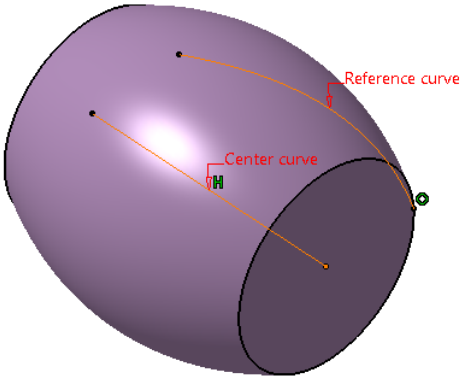

Figure 17-46 *The swept volume created using the* ***Center and reference curve*** *subtype with no fixed radius*

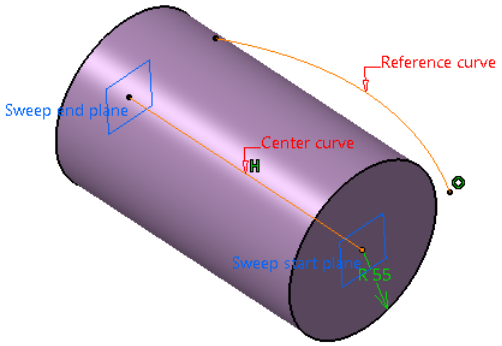

Figure 17-47 *The swept volume created using the* ***Center and reference curve*** *subtype with fixed radius of 55mm*

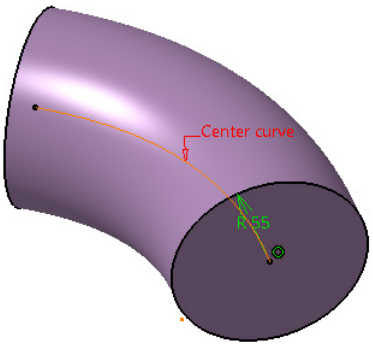

Figure 17-48 *The swept volume created using the* ***Center and radius*** *subtype*

CREATING SURFACES

The **Generative Shape Design** workbench has some additional tools compared to the **Wireframe and Surface Design** workbench. The **Surfaces** toolbar in the **Generative Shape Design** workbench is shown in Figure 17-49. The tools in this toolbar are used to create rich and complex surface geometries. The methods to create surfaces using these tools are discussed next.

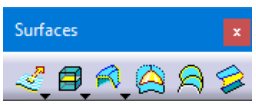

Figure 17-49 *The* ***Surfaces*** *toolbar*

Creating Variable Offset Surfaces

Menubar:	Insert > Surfaces > Variable Offset
Toolbar:	Surfaces > Offsets sub-toolbar > Variable Offset



The **Variable Offset** tool is used to create a variable surface that is offset between other offset surfaces. Using this tool, you can create variable and constant offset surfaces in one operation. To do so, choose the **Variable Offset** tool from the **Offsets** sub-toolbar in the **Surfaces** toolbar; the **Variable Offset Definition** dialog box will be displayed, as shown in Figure 17-50. Next, select a base surface in the **Base Surface** selection box. If the base surface

was created using multiple surfaces then you can select the sub-parts of the surface in the **Parameters** tab. Next, specify the offset type from the **Offset** drop-down list and a value in the spinner next to it. The **Offset** drop-down list has two options, **Variable** and **Constant**. If the sub-part to offset is an element, such as a line, curve, or edge, then the **Constant (Border)** and **Constant (Inner)** options will also be available in the **Offset** drop-down list. You can use the **Add Before** or **Add After** radio button to add a surface before or after the selected surface. You can choose the **Replace** radio button to replace the selected surface by another surface. You can select the **Offset law type** using the **Linear** or **S type** radio button. By default, the **S type radio button** is selected in this field. You can choose the **Reverse Direction** button to reverse the direction of the offset surface. Choose the **OK** button to complete the feature, as shown in Figure 17-51.

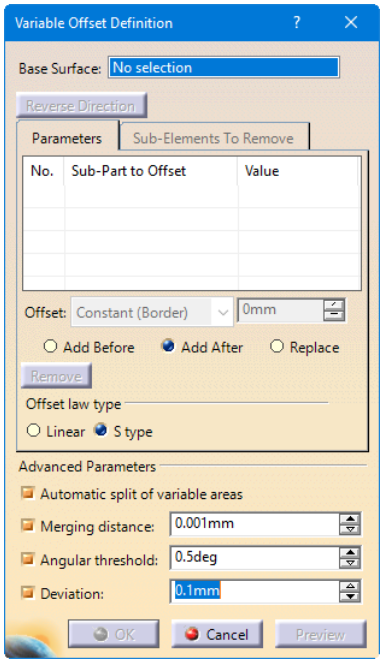

***Figure 17-50** The **Variable Offset Definition** dialog box*

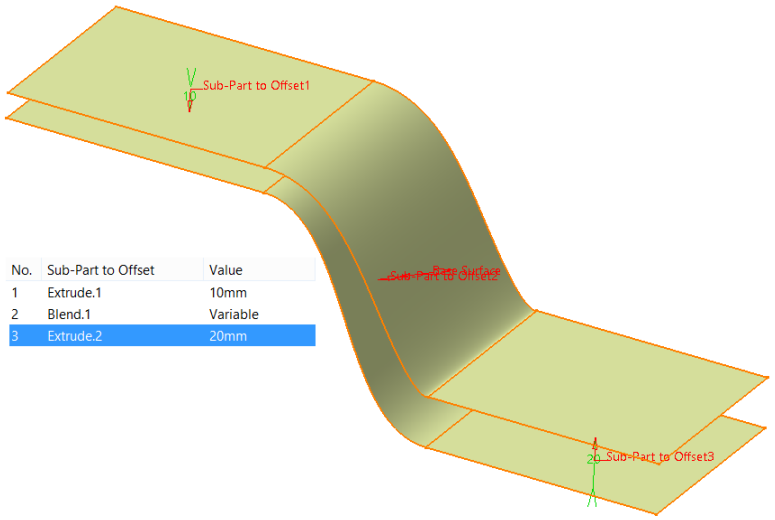

Figure 17-51 *The* ***Variable Offset*** *created*

In case, the offset encounters a problem while creating a variable surface, a warning dialog box will appear and the sub-elements of the offset surface will display warnings with flag notes to remove sub-elements, as shown in Figures 17-52 and 17-53. If you move the cursor over a flag note, a message giving an accurate diagnosis is displayed. The elements with warnings will be displayed under the **Sub-Elements To Remove** tab of the **Variable Offset Definition** dialog box, as shown in Figure 17-54.

You can also create an offset surface whose sub-elements may have several constant values. For this, you need to choose the **Constant** option with an offset value for each sub-part in the **Offset** drop-down list. The resulting offset surfaces will automatically get connected to each other.

You can also define the advance parameters like Automatic split of variable areas, Merging diatances, Angular Threshold and Deviation in the Advanced Parameters area.

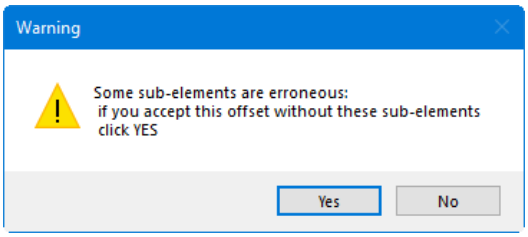

Figure 17-52 *The erroneous* ***Warning*** *box*

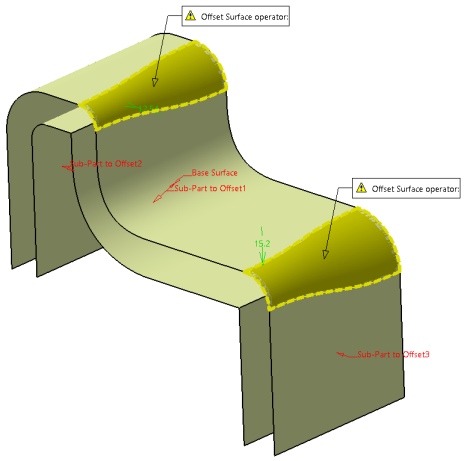

Figure 17-53 The variable offset displaying warning flag notes

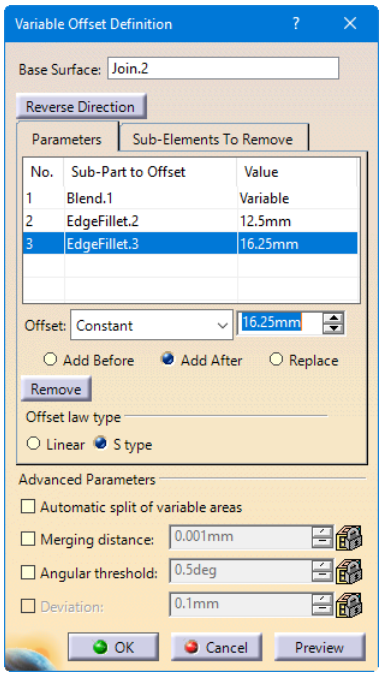

*Figure 17-54 The **Sub-Elements To Remove** tab displaying sub-elements with warning*

Creating Rough Offset Surfaces

Menubar: Insert > Surfaces > Rough Offset
Toolbar: Surfaces > Offsets sub-toolbar > Rough Offset



The **Rough Offset** tool creates an offset surface which approximates the initial surface to keep its main characteristics. To create a rough offset surface, choose the **Rough Offset** tool from the **Offsets** sub-toolbar in the **Surfaces** toolbar; the **Rough Offset Surface Definition** dialog box will be displayed, as shown in Figure 17-55. Select a reference surface that is to be offset in the **Surface** selection box; an arrow upon the selected surface indicating the proposed direction of the offset will be displayed. Click on it if you want to reverse the direction. Next, you need to specify an offset distance in the **Offset** edit box. Set an approximation tolerance by specifying a value in the **Deviation** spinner. The default value is 1mm and the minimum acceptable value is 0.2mm. Note that the offset value must be larger than the deviation value. Choose the **Preview** button; the **Update in progress** window will be displayed, as shown in Figure 17-56. As the topology updating gets finished, the preview of the offset surface will be displayed. In some cases, when the deviation exceeds its maximum value, the **Deviation Analysis** check box will become active. When you select the **Deviation Analysis** check box to display and analyze the deviation at specific points, the **Deviation Analysis** color scale appears in the geometry area, as shown in Figure 17-57.

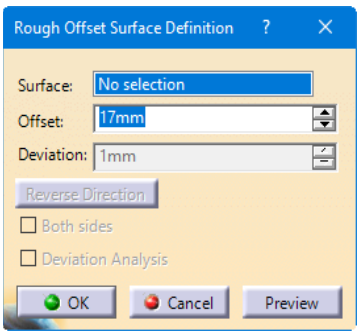

*Figure 17-55 The **Rough Offset Definition** dialog box*

Choose the **OK** button to create the surface and the resulting rough offset, refer to Figures 17-58 and 17-59.

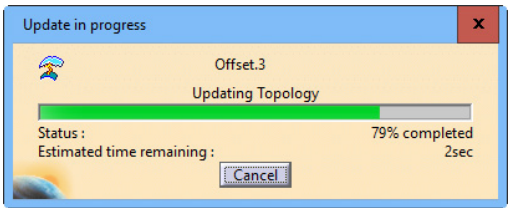

Figure 17-56 *The* ***Update in progress*** *window*

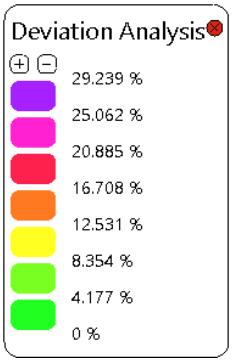

Figure 17-57 *The* ***Deviation Analysis color*** *scale*

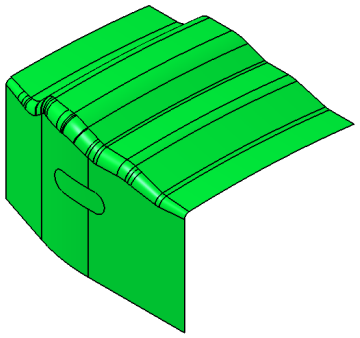

Figure 17-58 *The surface to be offset*

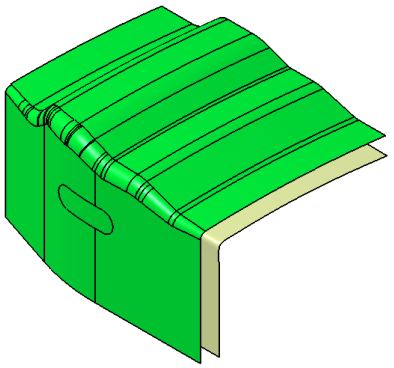

Figure 17-59 *The resulting* ***Rough Offset*** *surface*

Creating Mid Surfaces

Menubar: Insert > Surfaces > Mid Surface
Toolbar: Surfaces > Offsets sub-toolbar > Mid Surface



The **Mid Surface** tool is used to create a mid surface from a pair of faces that are offset from each other. To create a mid surface, choose the **Mid Surface** tool from the **Offsets** sub-toolbar in the **Surfaces** toolbar; the **Mid Surface Definition** dialog box will be displayed, as shown in Figure 17-60. Also, you will be prompted to select a volume feature, a body, or a solid feature. Select a solid feature, a volume feature, or a body that contains a pair of faces with the help of the **Support** selection box. Next, select the **Face Pairs** option in the **Creation Mode** drop-down list and select one or more pairs of faces from which the mid-surface will be extracted. Note that a face can belong to more than one pair. Within a pair, faces are ordered as the Main Side and the Other Side and are always offset from each other. When you select the main side, the **Mid Surface** tool automatically selects the other side and generates a mid surface according to the specified offset ratio. Next, you need to specify a value in the **Offset ratio** spinner. The value of the offset ratio should be between 0 and 1. Choose **OK** to generate the mid surface, as shown in Figures 17-61 to 17-63.

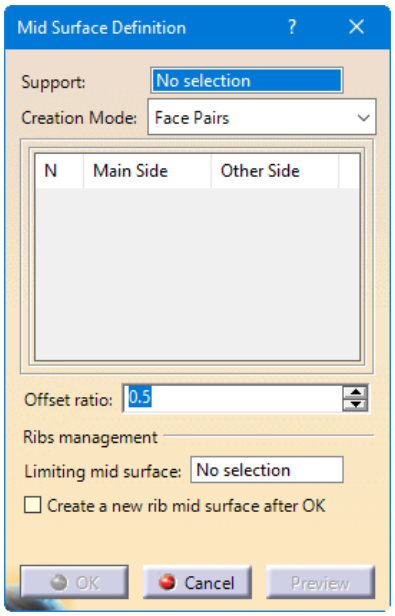

***Figure 17-60** The **Mid Surface Definition** dialog box*

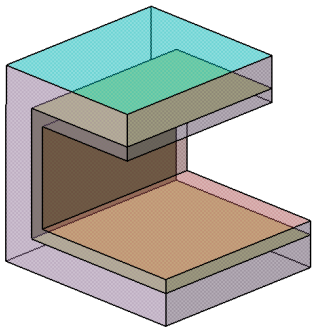

***Figure 17-61** The **Mid Surface** with offset ratio=0.3*

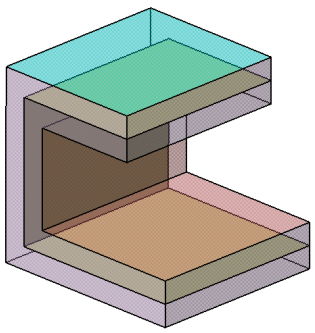

***Figure 17-62** The **Mid Surface** with offset ratio=0.5*

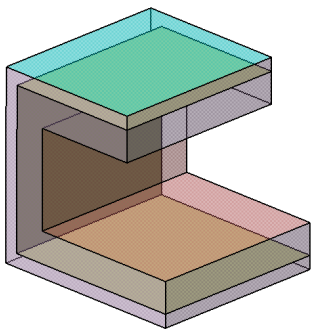

***Figure 17-63** The **Mid Surface** with offset ratio=0.7*

You can create a mid surface by selecting a set of faces and setting an offset ratio. This is useful for complex models which may not contain parallel faces to form a pair. To create a mid surface from a set of faces, select the **Faces to offset** option in the **Creation Mode** drop-down list; the **Mid Surface Definition** dialog box will be displayed, as shown in Figure 17-64. Select a volume feature, a body, or a solid feature in the **Support** selection box. Next, select one or more faces

in the **Faces to Offset** selection box. Choose **Manual** or **Automatic** from the **Computation Mode** drop-down list and specify an offset distance in the **Offset** edit box and choose **Preview** to preview the result.

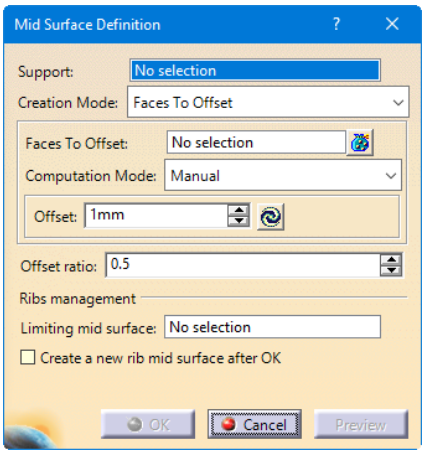

Figure 17-64 *The* ***Mid Surface Definition*** *dialog box with the* ***Faces To Offset*** *option selected*

To create a mid surface if you select the **Automatic** option in the **Creation Mode** drop-down list, the **Mid Surface Definition** dialog box will be displayed, as shown in Figure 17-65. Next, you need to specify a thickness threshold in the **Thickness Threshold** for the resulting surface. This thickness threshold acts as maximum distance for the selection of pairs of faces to create the mid surface. By default, the **Automatic Thickness Threshold** check box is selected which calculates the default thickness threshold value. On clearing this check box, the **Thickness Threshold** spinner gets activated. You can specify the value of thickness threshold in this spinner.

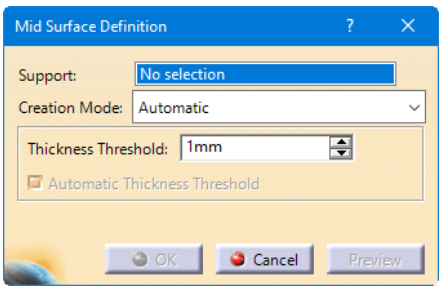

Figure 17-65 *The* ***Mid Surface Definition*** *dialog box with the* ***Automatic*** *option selected*

You can manage the mid-surface creation of ribs using an existing connex mid-surface. To do so, choose the **Create a new rib mid surface after OK** radio button from the **Ribs management** area and choose **OK**; the **Mid Surface Definition** dialog box appears again with **Mid Surface.1** selected in the **Limiting mid surface** selection box. In the **Face Pairs** area, select a pair of faces to form the rib. During the mid-surface creation of ribs, offset ratio is set to 0.5 by default. Choose the **OK** button to complete the feature.

Creating Adaptive Swept Surfaces

Menubar: Insert > Surfaces > Adaptive Sweep
Toolbar: Surfaces > Sweeps sub-toolbar > Adaptive Sweep



Adaptive surface is a surface which can adapt the changing dimensions of the parent profile. The dimensions applied on the sketched profile affect the resulting swept surface. You can vary the cross-section of the sweep along the guide curve by defining the user sections. The user-section inherits the constrains of the parent sketch and allows you to modify them independently. To create an adaptive sweep, choose the **Adaptive Sweep** tool from the **Sweeps** sub-toolbar in the **Surfaces** toolbar; the **Adaptive Sweep Definition** dialog box is displayed, as shown in Figure 17-66. Select a guide curve in the **Guiding Curve** selection box. If no guiding curve already exists, right-click in the **Guiding curve** selection field to invoke the contextual menu for creating a guide curve. You can select a spine with the help of the **Spine** selection box. By default, the spine is selected as the guiding curve. Selection of reference surface is optional. The reference surface is the surface on which the guide curve lies and is used to define the axis system in which the swept surface will be created. Next, select a sketch to be swept along the guiding curve in the **Sketch** selection box. As you select the sketch, an axis system is displayed defining the plane on which the first section is created. Select the end point of the guiding curve to create another section. You may also drag the axis system along the guiding curve by using the drag handles in the graphics area. Right-click on the manipulator to display the contextual menu. The options in the contextual menu are discussed next.

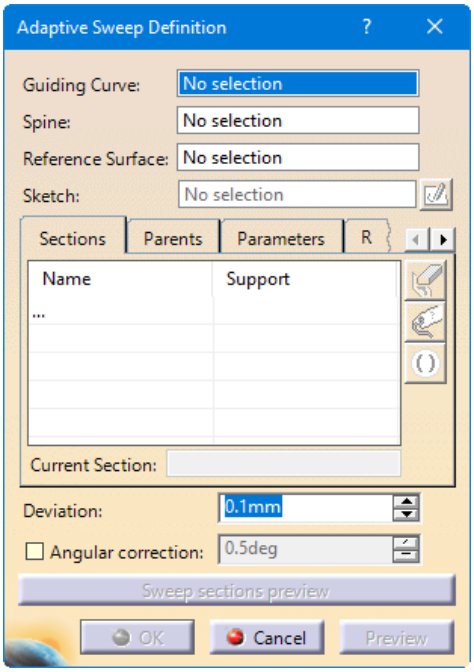

Figure 17-66 *The* ***Adaptive Sweep Definition*** *dialog box*

Create a section here
Choose this option to create a section at the manipulator's place. The section is created at a point on the guide curve with the corresponding ratio.

Use interpolated manipulator
Move the manipulator along the guide curve to visualize the section parameters.

Show all sections' constraints
This option allows you to visualize all the sections with their constraints.

The **Sections** tab of the **Adaptive Sweep Definition** dialog box displays the sections created along the guiding curve.

 Choose this button to remove the current section.

 Choose this button to rename the current section.

 Choose this button to activate or deactivate the current section.

Specify a value of deviation in the **Deviation** spinner. Decreasing the value of deviation increases the precision. Select the **Angular correction** check box to specify a value for the angular correction. Specifying angular correction may be necessary when small discontinuities are detected with respect to the spine. By default, the value of angular correction is 0.5 degree. In the **Adaptive Sweep Definition** dialog box, choose the **Parents** tab to display the elements which are creating the sweep. You can update or replace the parent by selecting the parents and choosing the  button at the top right corner of the **Parents** tab. Choose the **Parameters** tab to display and redefine the constraints on a given section. Select a section using the **Current Section** drop-down list; the constraints will be displayed with their respective values. Choose the **Relimitation** tab to limit the swept surface at specified location and choose the **OK** button to complete the feature, as shown in Figure 17-67.

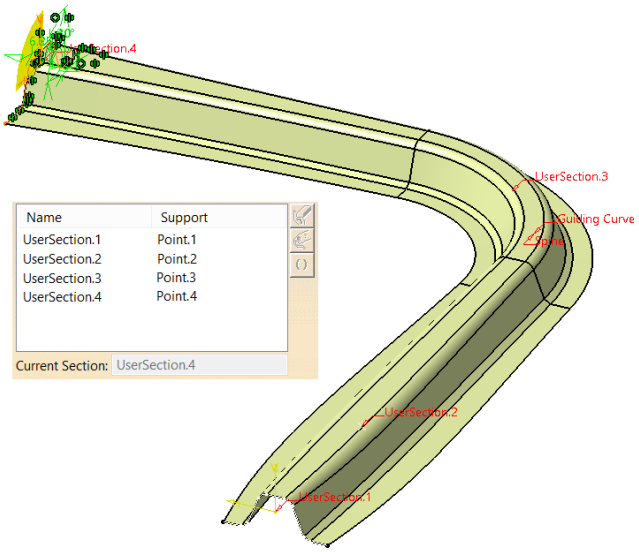

Figure 17-67 *The adaptive sweep created using four user sections*

In case, you want to exit the **Adaptive Sweep** after creating the sketches using the **Create Sketch** contextual menu, with the sketches retained, choose the **To cancel the command but keep the sketch, use:**  button in the **Adaptive Sweep definition** dialog box.



Tip

*It is advised to create the input sketch while the **Adaptive Sweep** tool is active in order to benefit from the automatic positioning of the sketch. This will improve the robustness of the adaptive sweep.*

PERFORMING OPERATIONS ON SHAPE GEOMETRY

The **Operations** toolbar belongs to the **Wireframe and Surface Design** and **Generative Shape Design** workbenches.

The operations offer functions for connecting, extending, trimming, filleting, translating, revolving, scaling and mirroring of surfaces, volumes, and wireframe geometries. The scope of operations offered by the **Wireframe and Surface Design** workbench is smaller than that offered by the **Generative Shape Design** workbench. Some of the tools in the **Operations** toolbar are discussed next.

Creating the Shape Fillet

Menubar: Insert > Operations > Shape Fillet
Toolbar: Operations > Fillets sub-toolbar > Shape Fillet



The **Shape Fillet** tool is used to create fillet surfaces with constant radius between two support surfaces. To do so, choose this tool from the **Fillets** sub-toolbar in the **Operations** toolbar; the **Fillet Definition** dialog box will be displayed, as shown in Figure 17-68. By default, the **BiTangent Fillet** option is selected in the **Fillet type** drop-down list. Next, select a surface as the first support and then select the second surface as the second support. As you select the surfaces, an arrow will be displayed on each surface indicating the location of the fillet, as shown in Figure 17-69. Specify the value of fillet in the **Radius** spinner. If you select the **Chordal** radio button, the **Radius** edit box changes into the **Length** edit box. Next, select the **Conic parameter** check box, if you need to vary the section of the fillet. If the value of parameter is 0.5, the resulting curve will be a parabola. For the value between 0 to 0.5, the resulting curve will be an arc of ellipse. For the value between 0.5 to 1, the resulting curve will be a hyperbola. In the **Extremities** drop-down list, four options are available which are discussed next.

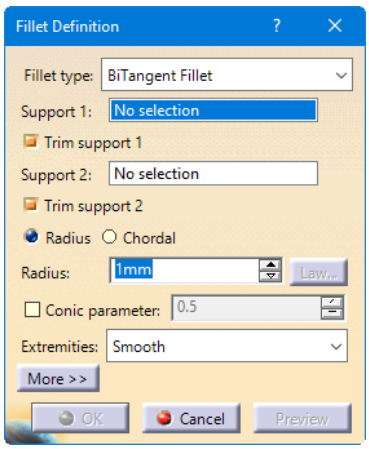

Figure 17-68 *The **Fillet Definition** dialog box*

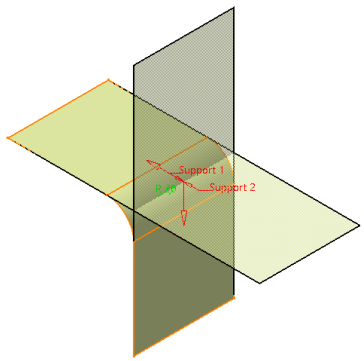

Figure 17-69 *The fillet applied between two surfaces*

Smooth

This option is used to apply a tangency constraint at the connection point between the fillet surface and the support surface. This will create a smooth connection between the support surface and the fillet surface, as shown in Figure 17-70.

Straight

On selecting this option, the tangency constraint will not be applied at the connection point between the support surface and the fillet surface. This will generate a sharp angle at the connection point, as shown in Figure 17-71.

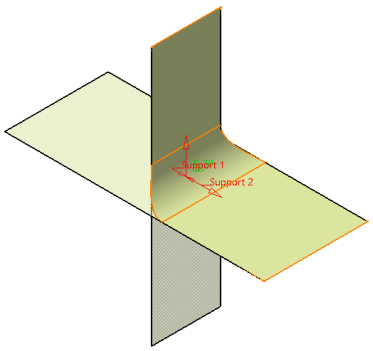

Figure 17-70 *Fillet applied using the* ***Smooth*** *option*

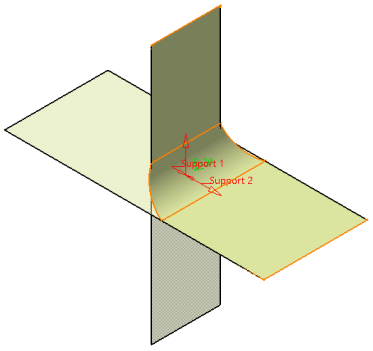

Figure 17-71 *Fillet applied using the* ***Straight*** *option*

Maximum

On selecting this option, the fillet surface is limited by the longest selected support's edge, as shown in Figure 17-72.

Minimum

On selecting this option, the fillet surface is limited by the shortest selected support's edge, as shown in Figure 17-73.

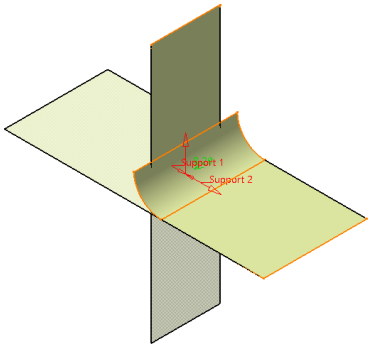

Figure 17-72 *The fillet applied using the* ***Maximum*** *option*

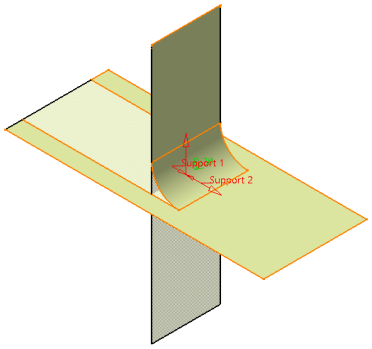

Figure 17-73 *The fillet applied using the* ***Minimum*** *option*

Choose the **More** button to display additional options available in the **Fillet Definition** dialog box. You can choose a guide curve for the fillet boundary with the help of the **Hold Curve** selection box. If a radius propagation is defined with Hold Curve, a spine has to be defined. You can limit the fillet by defining points for limiting the fillet geometry using the **Law Relimiter 1** and **Law Relimiter 2** selection boxes. Note that a law has to be defined for applying relimiter to fillet geometry.

If you are creating a fillet with multi-ribbons, the **Update Error** message box might be displayed with a message to process each ribbon in a separate operation, as shown in Figure 17-74. Choose **OK** in the message box; the solutions will be displayed in red color in the graphics area, as shown in Figure 17-75. In the **Faces to keep** field, select the face(s) you want to keep to create the shape fillet, refer to Figure 17-76. Choose **OK** to complete the feature, as shown in Figure 17-77.

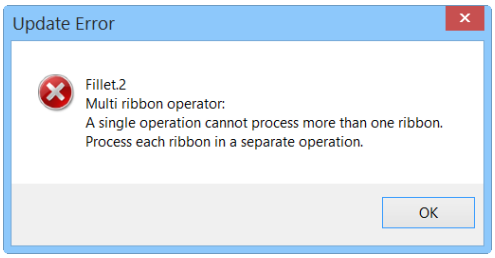

Figure 17-74 *The* ***Update Error*** *message box*

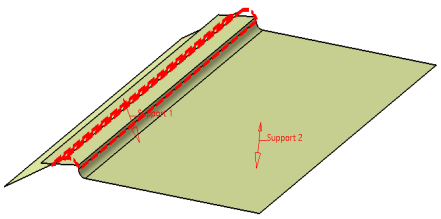

Figure 17-75 *The possible solutions shown in red color*

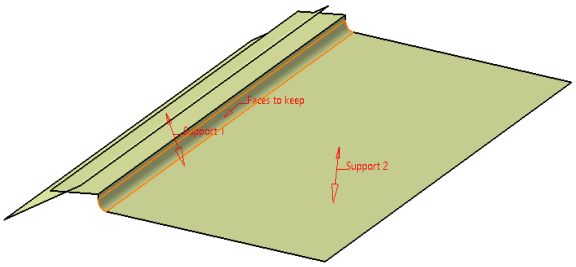

Figure 17-76 *Selecting faces to keep for multi-ribbon fillet*

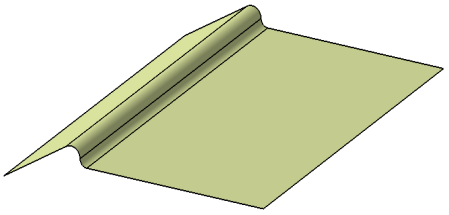

Figure 17-77 *The multi-ribbon fillet created*

Creating the Edge Fillet

Menubar:	Insert > Operations > Edge Fillet
Toolbar:	Operations > Fillets sub-toolbar > Edge Fillet

The edge fillet operation in the **Generative Shape Design** workbench can be used to fillet edges with a constant radius for a surface or volume element. A constant radius fillet is obtained by rolling a sphere over the selected edge. Note that all the edges must belong to one single surface. To create a fillet between two edges, choose the **Edge Fillet** tool from the **Fillets** sub-tool bar in the **Operations** toolbar; the **Edge Fillet Definition** dialog box will be displayed, as shown in Figure 17-78.

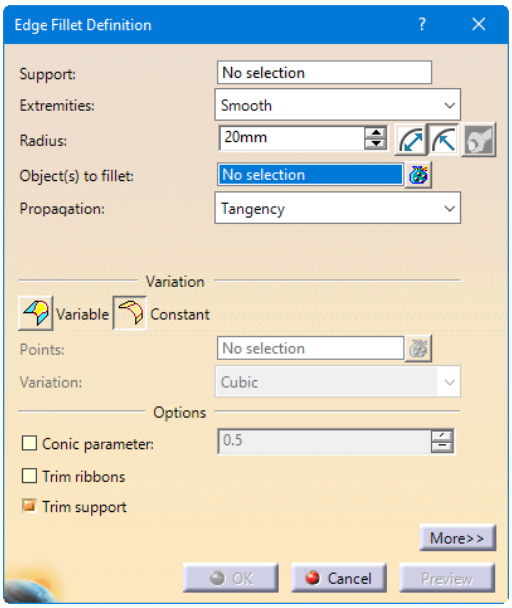

***Figure 17-78** The **Edge Fillet Definition** dialog box*

In this dialog box, select the edges to be filleted in the **Object(s) to fillet** selection box. Note that on selecting an edge, the geometry will be automatically selected from the **Support** selection box. Next, select the desired type of extremity for the fillet in the **Extremities** drop-down list. Specify a value for the fillet radius in the **Radius** spinner; a preview of the fillet will be displayed as shown in Figure 17-79. Next, you need to choose the Propagation type from the **Propagation** drop-down list. There are two options available in the **Propagation** drop-down list.

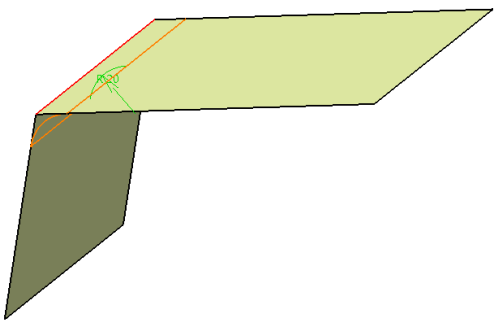

***Figure 17-79** Preview of the fillet applied*

Tangency

This option is used to create a fillet that is propagated up to the first edge that is not continuous in tangency.

Minimal

This option is used to create a fillet that is propagated up to the first geometric limitation.

In the **Variation** field, select the points where you want to vary the fillet geometry. Select the points in the **Points** selection box. The values for the fillet at the selected points can be defined only by double-clicking on the value in the graphics area, as shown in Figure 17-80.

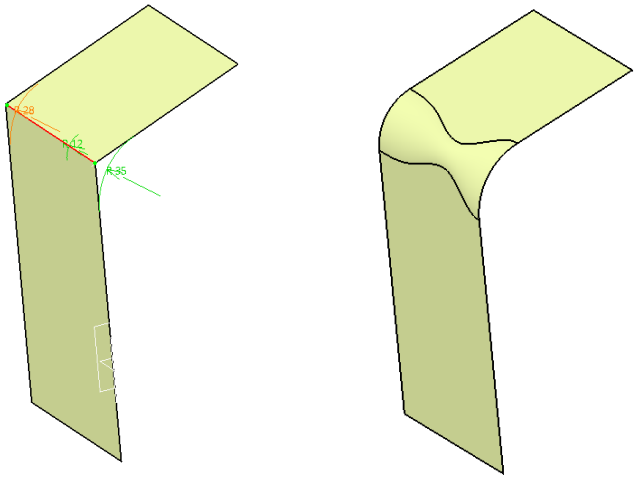

Figure 17-80 *Variable radius fillet applied to the selected edge*

Select the **Conic parameter** check box in the **Options** area to vary the section of the fillet. If the value of the parameter is 0.5, the resulting profile will be a parabola. For the value between 0 to 0.5, the resulting profile will be an elliptical arc. If the value is between 0.5 to 1, the resulting profile will be a hyperbola. Select the **Trim support** check box to relimit the support elements and assemble them to the fillet, if it is not selected by default. Choose **OK** to create the fillet feature, the fillet is applied to the edge, as shown in Figure 17-81. You may also need to indicate the edges that should not be filleted. But if the radius is too large, you will not be able select the boundary edges that you want to keep. Once you have selected the edges to be filleted, select **More>>** to expand the dialog box, then select the edges you want to keep in the **Edge(s) to keep** field. The edges selected are displayed pink in the graphics area.

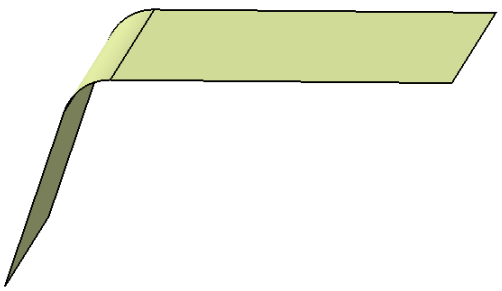

Figure 17-81 *Fillet applied to the selected edge*

If the **Conic parameter** check box is selected in the **Options** area, the **Edge(s) to keep** display box will be disabled. Similarly, if the **Edge(s) to keep** field is selected, the **Conic parameter** check box will be disabled.

You can limit the resulting fillet by using the **Limiting element(s)** selection box. These elements can either be surfaces, planes, or points on edges. You can select one or more limiting elements. Limiting element can also be defined by selecting a point on one of the selected edges to be filleted. Click on the arrow to retain opposite side of the fillet or to inverse it. Next, choose the **OK** button to create the limited fillet, as shown in Figure 17-82.

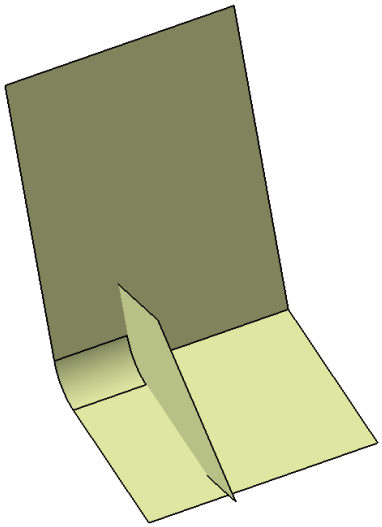

Figure 17-82 *Fillet created with a limited boundary*

TUTORIALS

Tutorial 1

In this tutorial, you will create the model using various tools available in the **Generative Shape Design** workbench. The model to be created is shown in Figure 17-83 and its views and dimensions are shown in Figure 17-84. **(Expected time: 1hr)**

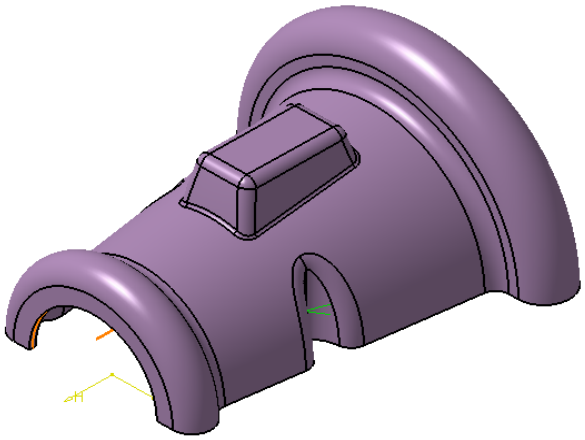

Figure 17-83 *Model for Tutorial 1*

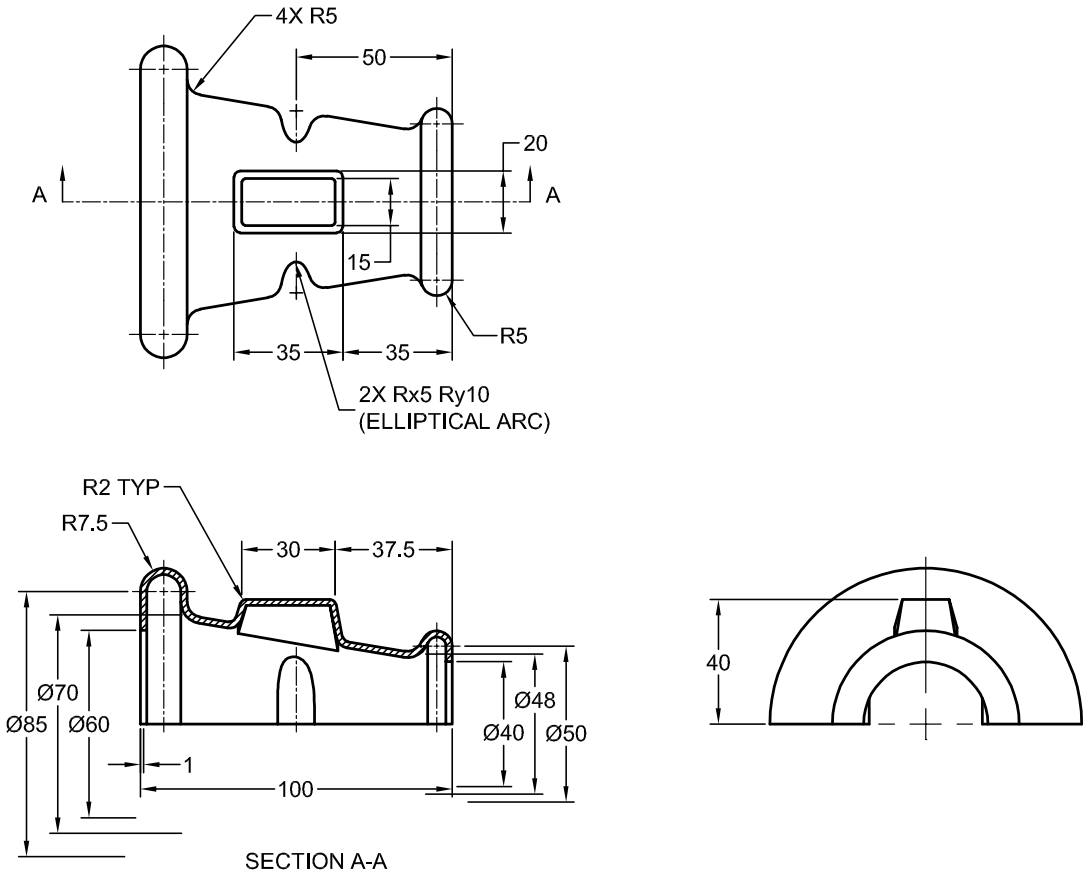

Figure 17-84 *Views and dimensions of the model for Tutorial 1*

The following steps are required to complete this tutorial:

a. Create the base surface of the model by revolving the sketch using the **Revolve** tool through 170 degrees.
b. Create the second surface feature.
c. Trim the extruded surface using the **Trim** tool.
d. Add fillet to the trimmed base surface.
e. Create a plane at an offset distance of 40 mm from the xy plane.
f. Create a multi-sections surface.
g. Trim the base feature using the lofted feature and create a fill surface on the top of the lofted feature.
h. Join all surfaces together and add remaining fillets to the surface model.
i. Add thickness to the surface.

Creating the Base Surface

To create this model, first you need to create the base surface. The base surface will be created by revolving a sketch created on the xy plane.

1. Start a new file in the **Generative Shape Design** workbench by choosing **Shape > Generative Shape Design** from the Start menu.

2. Invoke the sketcher environment using the xy plane as the sketching plane and create the sketch of the base surface, as shown in Figure 17-85.

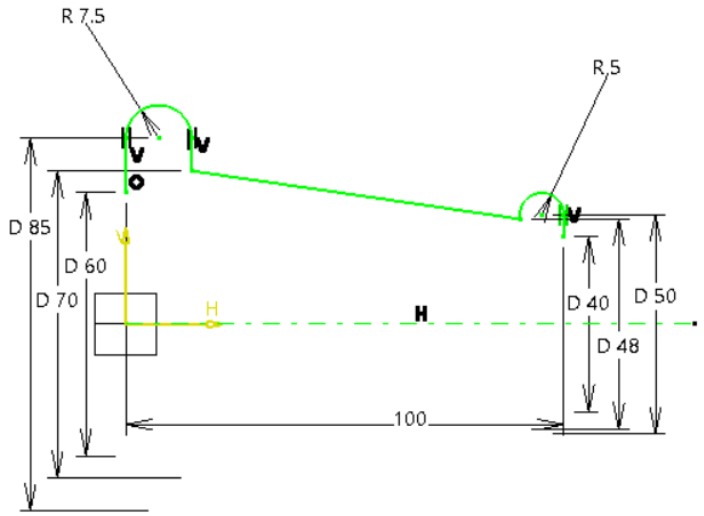

Figure 17-85 *Sketch of the base surface*

3. Exit the sketch workbench and choose the **Revolve** tool from the **Extrude-Revolution** sub-toolbar in the **Surfaces** toolbar; the **Revolution Surface Definition** dialog box is displayed.

4. Select the sketch using the **Profile** selection box and then select the horizontal axis from the **Revolution axis** selection box. Next, specify the value of angle in the **Angle 1** spinner in the **Angular Limits** area as **180**.

5. Choose the **OK** button from the **Revolution Surface Definition** dialog box. Figure 17-86 shows the resulting revolved base feature.

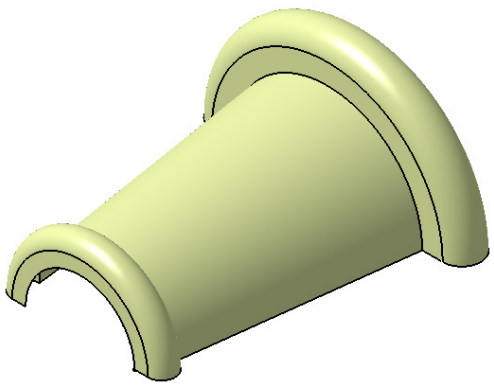

Figure 17-86 *Revolved base surface*

Creating the Second Surface Feature

The second surface feature is an extruded surface. This surface will be created by extruding a sketch created on the xy plane.

1. Select the xy plane as the sketching plane and invoke the sketch workbench.

2. Create the sketch of the second surface feature, as shown in Figure 17-87.

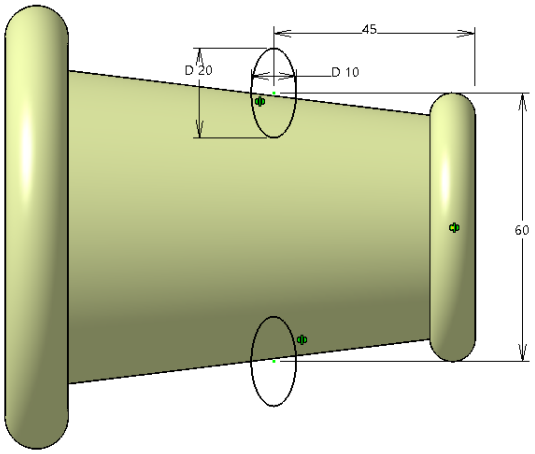

Figure 17-87 *Sketch of the second surface feature*

3. Next, exit the sketcher workbench and choose the **Extrude** tool from the **Surfaces** toolbar; the **Extruded Surface Definition** dialog box is displayed.

4. Select the sketch in the **Profile** selection box if not selected by default and select the xy plane as the direction of extrusion.

5. Set **40** in the **Dimension** spinner of the **Limit1** area and choose the **OK** button from the **Extruded Surface Definition** dialog box; the **Multi-Result Management** dialog box is displayed. Choose **OK**; the **Near/Far Definition** dialog box is displayed. Choose the **Cancel** button to complete the feature.

The surface created after extruding the sketch is shown in Figure 17-88.

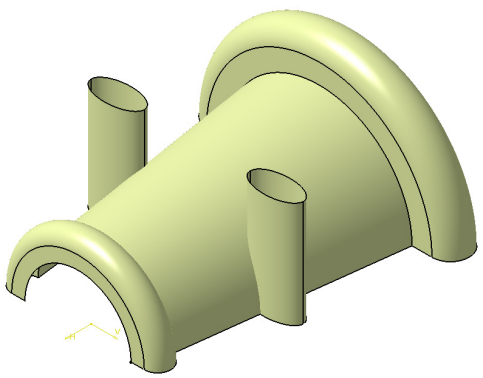

Figure 17-88 *Extruded surface*

Trimming the Base Surface Using the Extruded Surface

Next, you need to trim the unwanted portions from the base surface by using the extruded surface.

1. Choose the **Trim** tool from the **Trim-Split** sub-toolbar in the **Operations** toolbar; the **Trim Definition** dialog box is invoked.

2. Select the base and extruded surfaces from the drawing area; the name of the selected surfaces displayed in the **Trimmed elements** selection box. The element to be trimmed becomes translucent. Next, choose the **Other side/ Previous element** button to retain desired side of the surface. Refer to Figure 17-89.

3. Choose the **OK** button from the **Trim Definition** dialog box. The model after trimming the base surface is displayed in Figure 17-90.

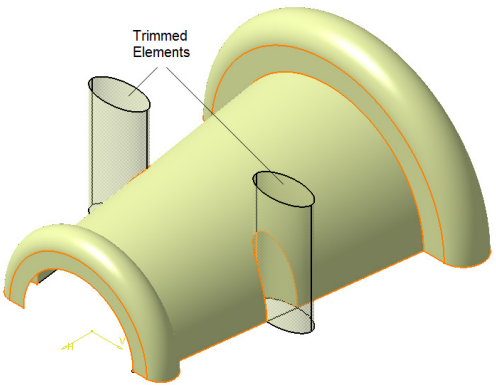

Figure 17-89 *Surfaces selected for trimming*

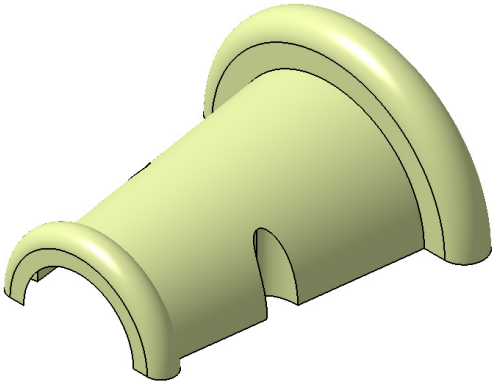

Figure 17-90 *Model after trimming the base surface*

Filleting the Edges of the Trimmed Surface

Next, you need to fillet the edges created at the intersection of the base surface and the extruded surfaces.

1. Choose the **Edge Fillet** tool from the **Fillets** sub-toolbar in the **Operations** toolbar; the **Edge Fillet Definition** dialog box is displayed.

2. Select the edges to fillet, as shown in Figure 17-91.

3. Set **5** in the **Radius** spinner and then choose the **OK** button from the **Edge Fillet Definition** dialog box. Figure 17-92 shows the model after adding the fillet.

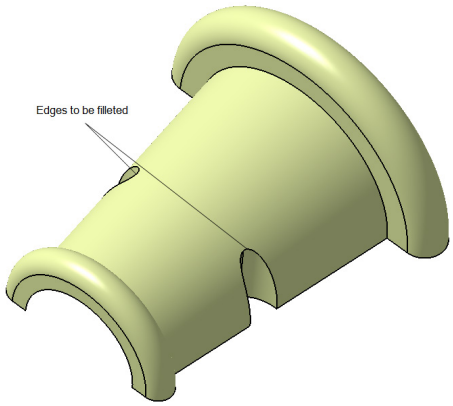

Figure 17-91 *Edges to be filleted*

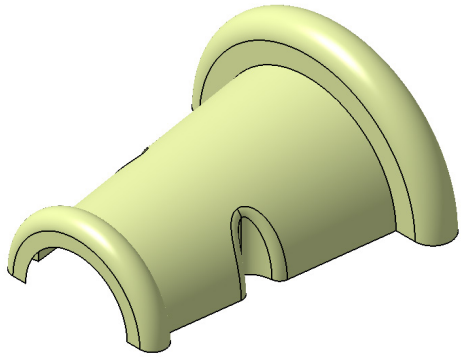

Figure 17-92 *Resultant fillet feature*

Creating the Lofted Surface

Next, you need to create a lofted surface. The lofted surface will be created between two curves. The first curve is to be created on the xy plane and projected on the surface. The next curve is to be created on an offset plane.

1. Create a plane at an offset distance of 40 mm from the xy plane and then invoke the sketch workbench using the newly created plane as the sketching plane.

2. Create the sketch, as shown in Figure 17-93, and exit the sketch workbench.

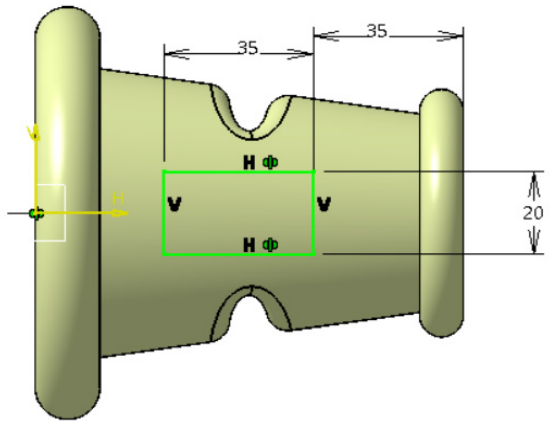

Figure 17-93 *Sketch to create the projected curve*

Next, you need to project this sketch on the base surface.

3. Choose the **Projection** tool from the **Wireframe** toolbar; the **Projection Definition** dialog box is displayed.

4. Select the **Along a direction** option from the **Projection type** drop-down list.

5. Select the sketch using the **Projected** selection box and then select the base surface in the **Support** selection box.

6. Select xy plane as the projection direction in the **Direction** selection box. Choose the **OK** button from the **Projection Definition** dialog box; the projected curve is created on the surface.

   Next, you need to create the second curve for creating the loft surface.

7. Invoke the sketch workbench with the newly created plane as the sketching plane and then create the sketch, as shown in Figure 17-94, and exit the sketching environment. If required, you can hide the first sketch after projection for the ease of creating the second sketch.

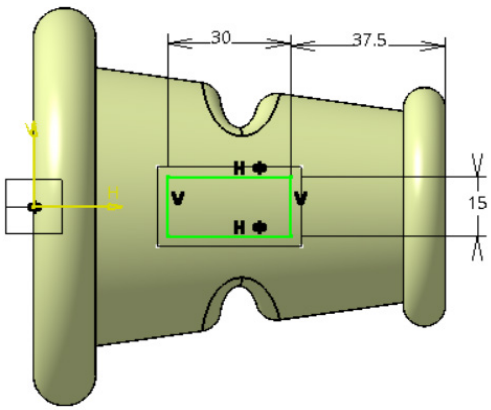

Figure 17-94 *First sketch for the loft surface*

8. Choose the **Multi-Sections Surface** tool from the **Surfaces** toolbar; the **Multi-Sections Surface Definition** dialog box is displayed.

9. Select the sections, as shown in Figure 17-95, and choose the **OK** button from the **Multi-Sections Surface Definition** dialog box. Figure 17-96 shows the model after creating the lofted surface.

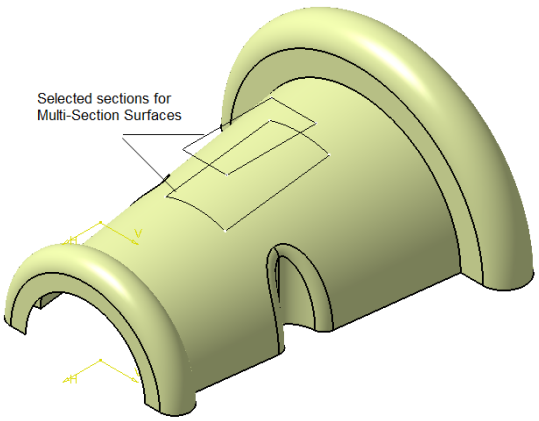

Figure 17-95 *Sections selected for multi-section surfaces*

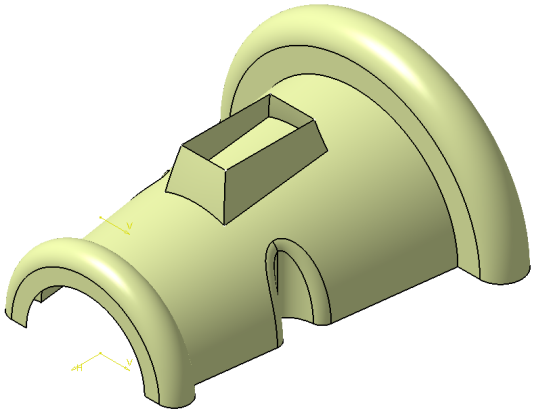

Figure 17-96 *Resultant lofted surface*

Trimming the Base Surface Using the Lofted Surface

Next, you need to trim the base surface by using the lofted surface.

1. Choose the **Trim** tool from the **Trim-Split** sub-toolbar in the **Operations** toolbar to invoke the **Trim Definition** dialog box.

2. Select the lofted surface and the base surface using the **Trimmed elements** selection box. Choose the **Other side / next element** or **Other side / previous element** button to retain the desired side of the trimmed surface if required.

3. Choose the **OK** button from the **Trim Definition** dialog box and hide the sketches you created for the loft feature.

4. Select the sketches and the projection you created for the loft feature and choose **Hide/Show** from the shortcut menu to hide the selected sketches. Figure 17-97 shows the model after the base feature has been trimmed by using the lofted surface.

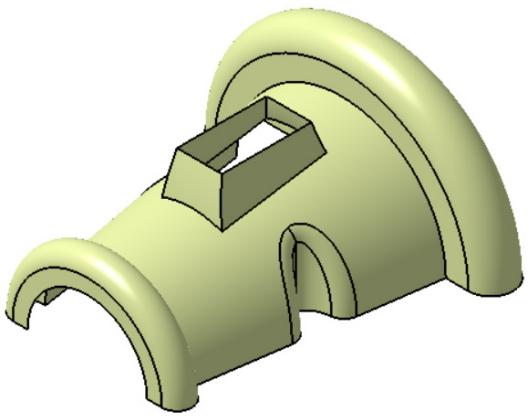

Figure 17-97 *Model after trimming the base surface*

Creating the Fill Surface

Next, you need to create the fill surface by using the top edges of the lofted surface.

1. Choose the **Fill** tool from the **Surfaces** toolbar; the **Fill Surface Definition** dialog box is displayed.

2. Select the edges, as shown in Figure 17-98, to create the fill surface; the selected edges display a flag note for the closed counter in the graphics area.

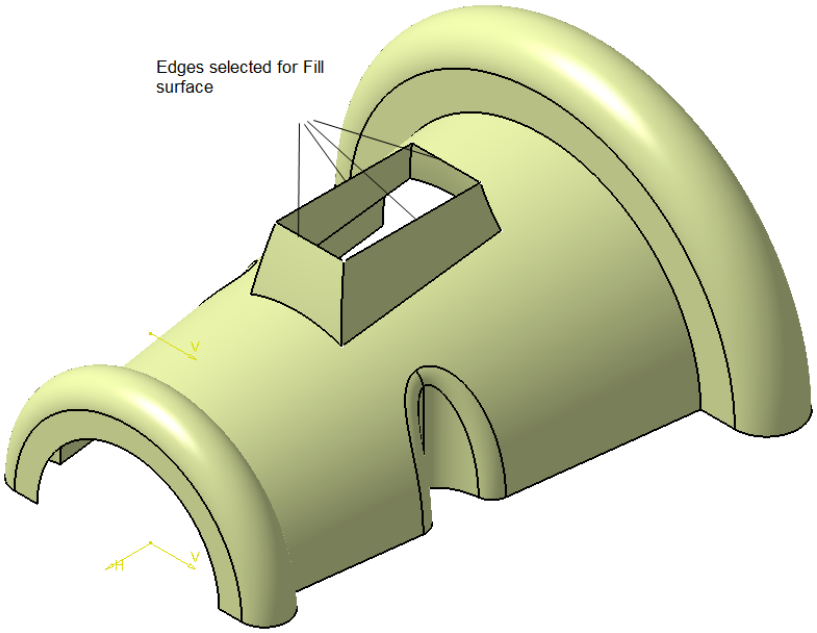

Figure 17-98 *Edges selected to create the fill surface*

3. Choose the **OK** button from the **Fill Surface Definition** dialog box to create the fill surface, as shown in Figure 17-99.

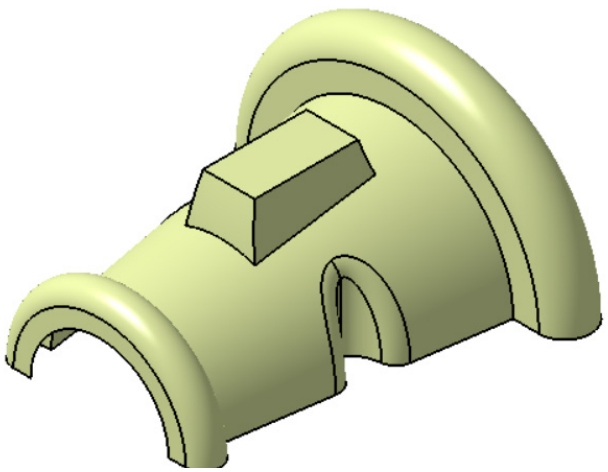

Figure 17-99 *Resultant fill surface*

Joining and Filleting the remaining Surfaces

Next, you need to join the lofted surface and the fill surface together by using the **Join** tool to create fillets on the edges. Note that if you want to add wall thickness to the surface model created using multiple surfaces, you need to join all the surfaces first.

1. Choose the **Join** tool from the **Join-Healing** sub-toolbar in the **Operations** toolbar; the **Join Definition** dialog box is displayed.

2. Select the lofted surface and the fill surface from the drawing area; the names of the selected surfaces are displayed in the **Elements To Join** selection box.

3. Next, choose the **OK** button from the **Join Definition** dialog box; the selected surfaces are joined.

4. Choose the **Edge Fillet** tool from the **Operations** toolbar and add the required fillets to the model. For dimensions of the fillets, refer to Figure 17-84. The final surface model after adding the fillets is shown in Figure 17-100

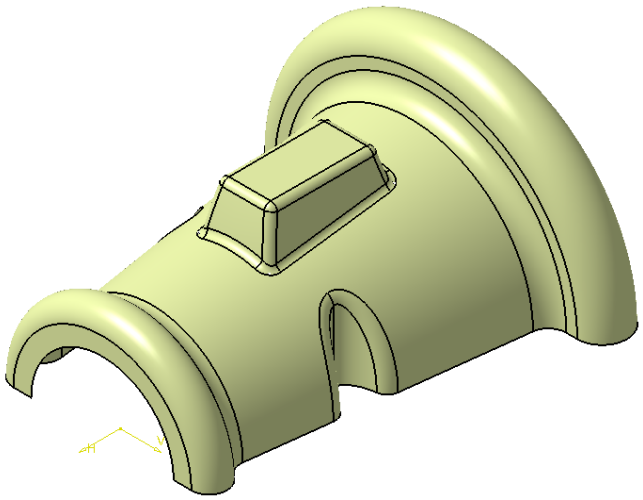

Figure 17-100 *Final surface model*

Adding Thickness to the Surface Model

Next, you need to add thickness to the surface model.

1. Choose the **Thick Surface** tool from the **Volumes** toolbar to invoke the **ThickSurface Definition** dialog box.

2. Select the surface model and then set **1** in the **First Offset** spinner.

3. Choose the **OK** button from the **ThickSurface Definition** dialog box.

If required you can hide the sketches used for creating features of the model. Figure 17-101 shows the rotated view of the final model after thickening the surface.

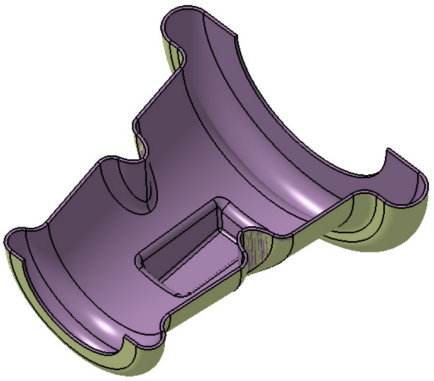

Figure 17-101 *The rotated view of the final model after thickening the surface*

Tutorial 2

In this tutorial, you will create the model shown in Figure 17-102 in the **Generative Shape Design** workbench. Its orthographic views are shown in Figure 17-103.

(Expected time: 45 min)

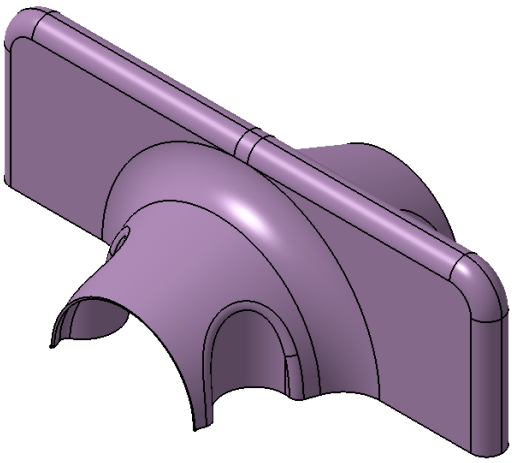

Figure 17-102 *Model for Tutorial 2*

The following steps are required to complete this tutorial:

a. Create the base feature on the zx plane by using the extruded surface tool.
b. Create the second feature using the **Multi-Sections Surface** tool and mirror it about the yz plane.
c. Create the third feature by using the **Fill** tool.
d. Create a cut feature on the lofted surface and trim it with base surface.
e. Trim the base feature and join all surfaces of the model.
f. Add the fillet and thickness feature to the surface edges.

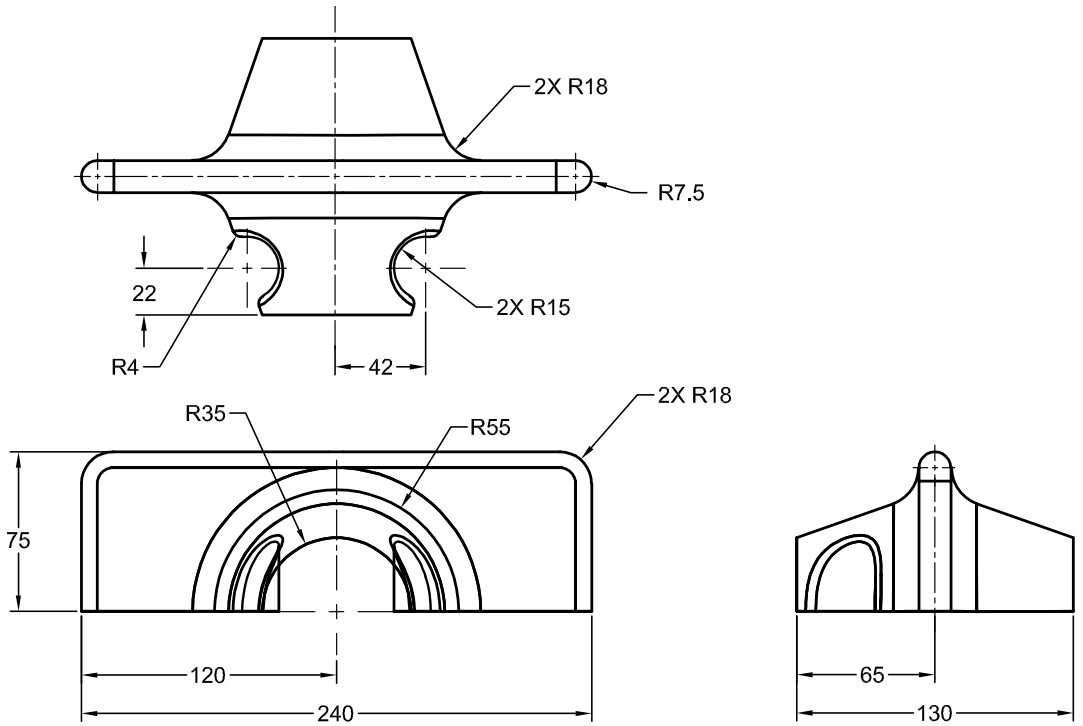

Figure 17-103 *Top, front, and right side views of the surface model*

Creating the Base Feature

The base feature is an extruded surface whose profile will be drawn on the zx plane.

1. Start CATIA part document in the **Generative Shape Design** workbench.

2. Invoke the sketcher environment using the zx plane as the sketching plane and create the sketch of the base surface, as shown in Figure 17-104.

3. Exit sketch workbench and choose the **Extrude** tool from the **Surfaces** toolbar; the **Extruded Surface Definition** dialog box is displayed.

4. In the **Profile** selection box, select the sketch and while retaining the default direction enter **120** as the value in the **Dimension** spinner in the **Limit 1** area. Choose the **Mirrored Extent** check box to extrude the sketch symmetrically to a depth of 240 mm.

5. Choose the **OK** button from the **Extruded Surface Definition** dialog box. Figure 17-105 shows the resulting extruded base feature.

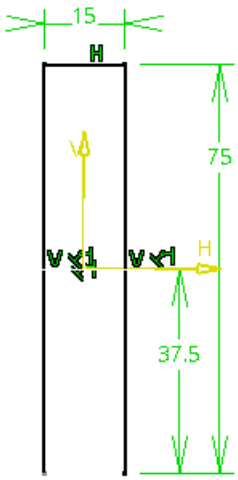

Figure 17-104 *Sketch of the base surface*

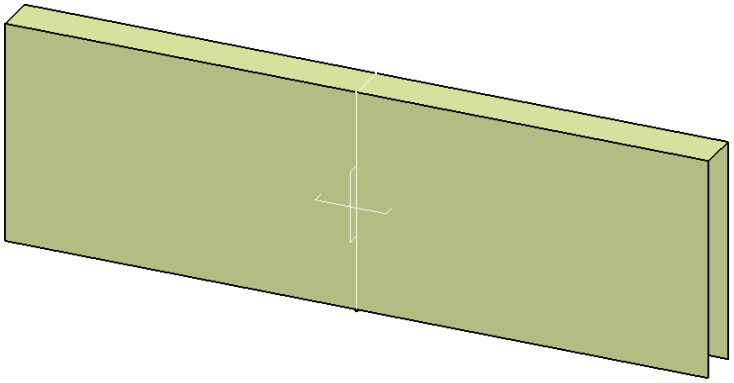

Figure 17-105 *Extruded base surface*

Creating the Second Surface Feature

Now, you need to create the multi-sections surface.

1. Create a sketch on the front face of the extruded surface and a second sketch on an offset plane created at an offset distance of 65 mm from the front plane. Refer to Figure 17-103 for dimensions.

2. After drawing the sketches, as shown in Figure 17-106, choose the **Multi-Sections Surface** tool from the **Surfaces** toolbar. Select both of the sketches to create a lofted surface, as shown in Figure 17-107.

3. Select the lofted surface and choose the **Symmetry** tool from the **Operations** toolbar. Now, select the yz plane as reference and choose **OK** to create the mirrored surface, refer to Figure 17-108.

The lofted surface and the extruded base surface has to be trimmed so that they can be used as a single surface body.

4. Choose the **Trim** tool from the **Operations** toolbar; the **Trim Definition** dialog box is displayed. Select the extruded and lofted surface and specify the side of the surfaces to be trimmed.

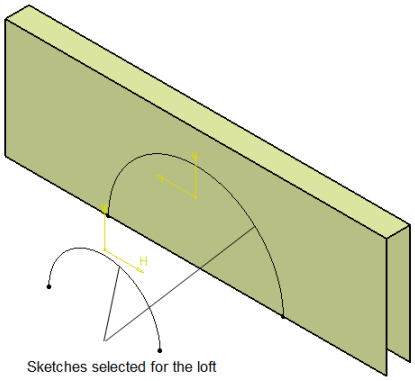

Figure 17-106 *Two sketches selected for multi-sections surface*

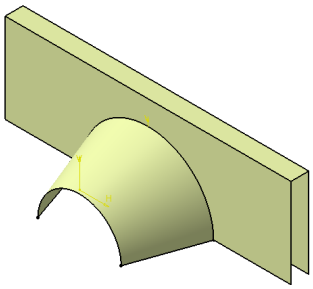

Figure 17-107 *Multi-sections surface created*

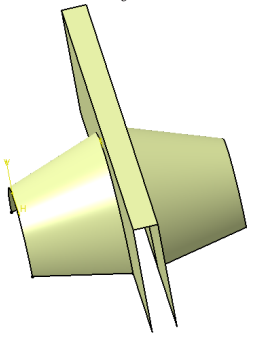

Figure 17-108 *Mirror surface created*

Creating the Fill Surfaces

Next, you need to create the fill surface to close the ends of the extruded surface.

1. Choose the **Line** tool from the **Wireframe** toolbar. Select the open end points of the base surface. Choose **OK** to create a line, refer to Figure 17-109. Similarly create another line on the other side.

2. Choose the **Fill** tool from the **Surfaces** toolbar. Select the edges of the surface and the line that you created in the previous step; a flag note in the geometry area displays **Closed Counter**.

3. Choose **OK** to complete the definition of the fill surface and repeat the process on the other side of the extruded surface. Similarly create another fill surface on the other side.

4. Choose the **Join** tool to merge the fill surface with the base surface. The resultant surface is displayed in Figure 17-110.

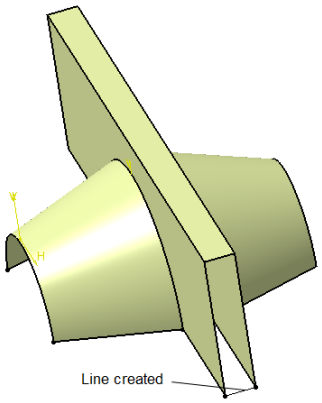

Figure 17-109 Line created for Fill surface

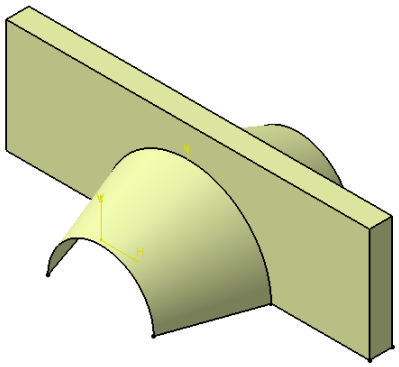

Figure 17-110 Fill surface created

Creating a Cut Feature on the Lofted Feature

In this step, you need to create the extruded surfaces. These surfaces will be used for trimming the lofted surface.

1. Select xy plane and draw the sketch for the extruded surface. For dimensions, refer to Figure 17-103.

2. Choose the **Extrude** tool from the **Surfaces** toolbar; the **Extruded Surface Definition** dialog box is displayed. Select the sketches using the **Profile** selection box, keeping the direction as default in the **Direction** selection box. Enter **40** in the **Dimension** spinner under the **Limit1 Type** drop-down list and enter **0** in the **Dimension** spinner under the **Limit2 Type** drop-down list and choose the **OK** button; the **Multi-Result Management** dialog box is displayed. Select the **keep all the sub elements** option from this dialog box and choose the **OK** button . Figure 17-111 shows the extruded surfaces.

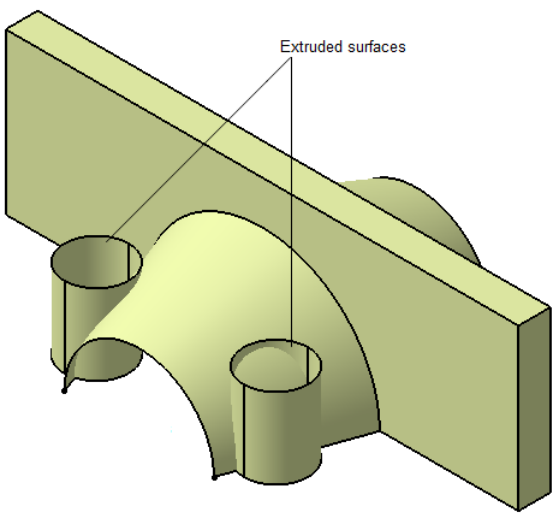

Figure 17-111 The extruded surfaces

Trimming and Joining the Surfaces

1. Choose the **Trim** tool from the **Operations** toolbar; the **Trim Definition** dialog box is displayed.

2. Select the extruded and lofted surface using the **Trimmed elements** selection box and if required, choose the **Other side/ next element** button to keep the desired side of surface.

3. Choose the **OK** button from the **Trim Definition** dialog box. The model after trimming the base surface is displayed in Figure 17-112.

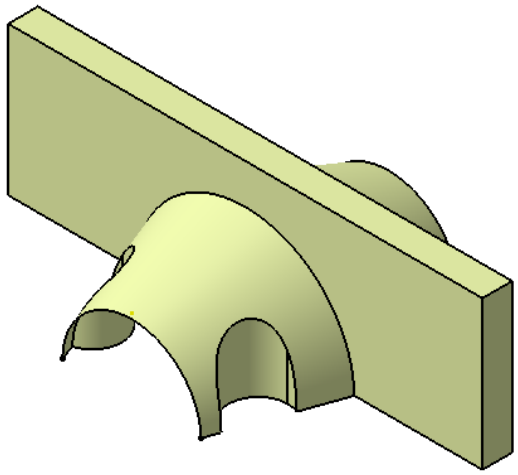

Figure 17-112 *The model after trimming*

Adding the Fillet and Thick Feature

1. Choose the **Edge Fillet** tool from the **Operations** toolbar, the **Edge Fillet Definition** dialog box is displayed.

2. Select the edges of the surface model and apply fillet to the selected edges, for dimensions refer to Figure 17-103. The model after applying fillet to the selected edges is shown in Figure 17-113.

3. Choose the **Thick Surface** tool from the **Volumes** toolbar; the **Thick Surface Definition** dialog box is displayed.

4. Specify **1** in **First Offset** spinner and select the surface under the **Objects to offset** selection box and choose the **OK** button.

   The rotated view of the model after applying thickness is shown in Figure 17-114.

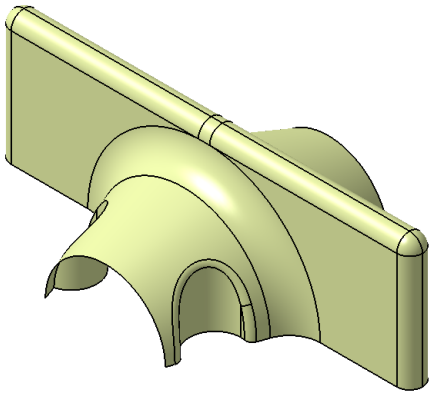

Figure 17-113 *The final surface model after applying fillet*

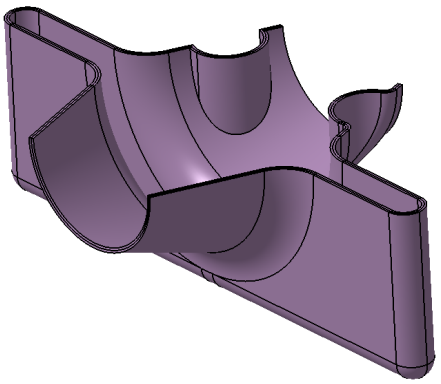

Figure 17-114 *The rotated view of the model after applying thick feature*

Self-Evaluation Test

Answer the following questions and then compare them to those given at the end of this chapter:

1. The **3D Curve Offset** tool is used to create _____in a defined direction.

2. If the offset value is larger than the offset distance, the generated curve results into a _____ corner.

3. _____type of profile is used to create swept surfaces with draft direction.

4. The **Conic** tool is used to create conic-type curves such as_____.

5. Silhouette is a _____ curve.

6. _____ lines are curves that can be used to create guide curves or silhouettes.

7. The **Spine** tool cannot be used to create curves that pass at right angles through planes or section planes. (T/F)

8. The **Corner** tool is used to create an arc of specific radius which is continuously tangent with two elements. (T/F)

9. The **Connect Curve** tool is used to connect two points or two curves with a curve. (T/F)

10. The **Swap UV** button allows you to change the values for the U and V parameters of the curve. (T/F)

Review Questions

Answer the following questions:

1. Which of the following tools is only available in CATIA V5 **Generative Shape Design** workbench?

   (a) **Extrude** (b) **Edge Fillet**
   (c) **Revolve** (d) **Sweep**

2. If the support surface is modified or updated, the isoparametric curve gets_____ itself.

3. The tools in the **Volumes** toolbar allows you to use some of the _____ functionality without changing workbenches.

4. Minimum acceptable value for creating a rough offset is _____mm.

5. The Variable offset surface is an offset surface between the _____.

6. The _____ tool is used to extend the boundaries of an existing surface.

7. The _____ tool is used to create a law between two curves.

8. You can select a point, vertex, or extremity as the starting point of the spine. (T/F)

9. The **Mid Surface** tool is used to create a surface between two parallel faces of a solid model. (T/F)

10. Using the **Join** tool, you can join multiple surfaces together. (T/F)

EXERCISES

Exercise 1

In this exercise, create the model of binoculars shown in Figure 17-115. First, create a closed surface model and join all the surfaces together and then solidify it. The views and dimensions of the model are shown in Figure 17-116. **(Expected time: 1.5 hr)**

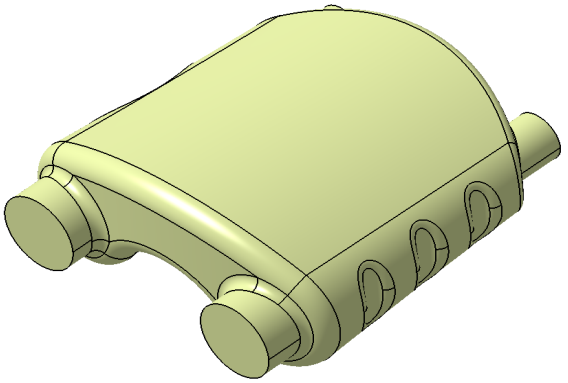

Figure 17-115 *Model for Exercise 1*

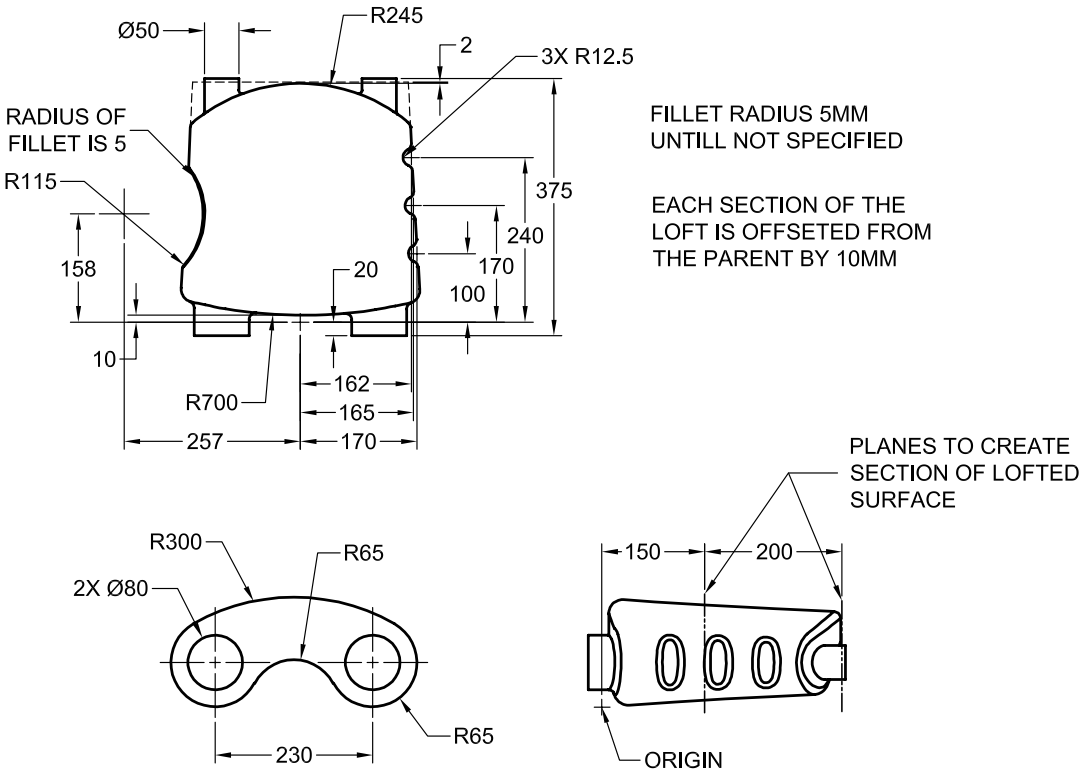

Figure 17-116 *Views and dimensions of the model for Exercise 1*

Answers to Self-Evaluation Test

1. parallel curves, **2**. sharp, **3**. Linear, **4**. Parabolas, Ellipses or Hyperbolas, **5**. 3D wireframe, **6**. Reflection, **7**. F, **8**. T, **9**. T, **10**. F