Table of Contents

Dedication iii
Preface xix

Chapter 1: Introduction to NX

Introduction to NX 1-2
System Requirements 1-4
Getting Started with NX 1-4
Important Terms and Definitions 1-6
Understanding the Functions of the Mouse Buttons 1-10
Quick Access Toolbar 1-11
Ribbon 1-14
Status Bar 1-18
Hot Keys 1-19
Color Scheme 1-19
Dialog Boxes in NX 1-19
Selecting Objects 1-20
Deselecting Objects 1-21
Self-Evaluation Test 1-21

Chapter 2: Drawing Sketches for Solid Models

Introduction 2-2
Starting NX 2-2
Starting a New Document in NX 2-3
Invoking Different NX Environments 2-6
Creating Three Fixed Datum Planes (XC-YC, YC-ZC, XC-ZC) 2-7
Displaying the WCS (Work Coordinate System) 2-8
Creating Sketches 2-9
    Creating Sketches in the Sketching Environment 2-9
    Creating Sketches in the Modeling Environment 2-13
Sketching Tools 2-13
    Drawing Sketches Using the Profile Tool 2-14
    Using Help Lines to Locate Points 2-16
    Drawing Individual Lines 2-17
    Drawing Arcs 2-17
    Drawing Circles 2-19
    Drawing Rectangles 2-20
    Placing Points 2-21
    Drawing Ellipses or Elliptical Arcs 2-25
    Drawing Conics 2-27

Evaluation Copy. Do not reproduce. For information visit www.cadcim.com

Drawing Studio Splines 2-27
Filleting Sketched Entities 2-29
The Drawing Display Tools 2-31
Fitting Entities in the Current Display 2-31
Zooming an Area 2-31
Dynamic Zooming 2-32
Panning Drawings 2-32
Fitting View to Selection 2-32
Restoring the Original Orientation of the Sketching Plane 2-33
Setting Selection Filters in the Sketch in Task Environment 2-33
Selecting Objects 2-34
Deselecting Objects 2-35
Using Snap Point Options While Sketching 2-35
Deleting Sketched Entities 2-36
Dimensioning Sketches 2-36
Limiting editable curves to a region of a sketch 2-41
Exiting the Sketch Environment 2-42
Creating Base Features by Extruding 2-42
Invoking the drafting environment in the current part file 2-43
Tutorial 1 2-44
Tutorial 2 2-50
Tutorial 3 2-57
Self-Evaluation Test 2-62
Review Questions 2-63
Exercise 1 2-64
Exercise 2 2-64

Chapter 3: Adding Geometric and Dimensional Constraints to Sketches

Constraining Sketches 3-2
Concept of Constrained Sketches 3-2
Under-Constrain 3-2
Fully-Constrain 3-2
Over-Constrain 3-2
Dimensioning Sketches 3-3
Applying Dimensions by Using the Rapid Dimension Tool 3-4
Applying Linear Dimensions 3-4
Applying Radial Dimensions 3-7
Applying Angular Dimensions 3-8
Applying Perimeter Dimensions 3-8
Geometric Constraints 3-9
Applying Additional Constraints Individually 3-9
Applying Symmetry Constraint 3-12
Converting a Sketch Entity or Dimension into a Reference Entity or Reference Dimension 3-12
Creating Alignment Constraints 3-13
Tutorial 1 3-14

Evaluation Copy. Do not reproduce. For information visit www.cadcim.com

Tutorial 2 3-19
Tutorial 3 3-22
Self-Evaluation Test 3-26
Review Questions 3-26
Exercise 1 3-27
Exercise 2 3-28

Chapter 4: Editing, Extruding, and Revolving Sketches

Editing Sketches 4-2
Trimming Sketched Entities 4-2
Extending Sketched Entities 4-3
Creating a Corner between Sketched Entities 4-4
Moving Sketched Entities by Using the Move Curve Tool 4-5
Offsetting Sketched Entities by Using Offset Move Curve 4-11
Modifying Entities by Using the Resize Curve Tool 4-12
Modifying Chamfer in Sketched Entities by Using Resize Chamfer Curve Tool 4-13
Deleting Sketched Entities by Using Delete Curve Tool 4-14
Offsetting Sketched Entities 4-15
Mirroring Sketched Entities 4-17
Creating a Linear Sketch Pattern 4-18
Creating a Circular Sketch Pattern 4-19
Creating a General Sketch Pattern 4-19
Trim Associative Curve 4-20
Scale Curve 4-21
Editing Sketched Entities by Dragging 4-23
Exiting the Sketch Environment 4-24
Changing the View of the Sketch 4-24
Creating Base Features by Extruding 4-24
Extrude Dialog Box Options 4-25
Creating Solid Revolved Bodies 4-31
Transforming 3D Objects 4-36
Copying, Moving, and Rotating Objects 4-38
Hiding Entities 4-45
Showing Hidden Entities 4-45
Hiding All Entities Using a Single Tool 4-46
Rotating the View of a Model in 3D Space 4-46
Setting Display Modes 4-47
Tutorial 1 4-47
Tutorial 2 4-50
Tutorial 3 4-54
Self-Evaluation Test 4-57
Review Questions 4-58
Exercise 1 4-59
Exercise 2 4-59

Evaluation Copy. Do not reproduce. For information visit www.cadcim.com

Chapter 5: Working with Datum Planes, Coordinate Systems, and Datum Axes

Additional Sketching and Reference Planes 5-2
Types of Datum Planes 5-3
Creating Datum Coordinate Systems 5-9
Creating Fixed and Relative Datum Axes 5-13
Other Extrusion Options 5-16
    Specifying the Boolean Operation 5-16
    Other Extrusion Termination Options 5-19
Projecting External Elements 5-21
Tutorial 1 5-23
Tutorial 2 5-28
Tutorial 3 5-32
Self-Evaluation Test 5-36
Review Questions 5-37
Exercise 1 5-38
Exercise 2 5-39
Exercise 3 5-41

Chapter 6: Advanced Modeling Tools-I

Advanced Modeling Tools 6-2
Creating Holes by Using the Hole Tool 6-2
    Creating Custom Holes 6-2
    Creating Drill Size Hole 6-4
    Creating Screw Clearance Hole 6-4
    Creating Threaded Hole 6-5
    Creating Hole Series 6-6
Creating Grooves 6-6
    Creating Rectangular Grooves 6-7
    Creating Ball End Grooves 6-9
    Creating U Grooves 6-10
Creating Slots 6-11
    Creating Rectangular Slots 6-12
    Creating Ball-End Slots 6-14
    Creating U-Slots 6-15
    Creating T-Slots 6-17
    Creating Dove-Tail Slots 6-18
Creating Ribs 6-20
Creating Chamfers 6-23
    Creating a Chamfer Feature Using the Symmetric Method 6-23
    Creating a Chamfer Feature Using the Asymmetric Method 6-25
    Creating a Chamfer Feature Using the Offset and Angle Method 6-25
Creating an Edge Blend 6-26
Tutorial 1 6-32
Tutorial 2 6-38
Self-Evaluation Test 6-45

Evaluation Copy. Do not reproduce. For information visit www.cadcim.com

Review Questions 6-46
Exercise 1 6-47
Exercise 2 6-48
Exercise 3 6-49

Chapter 7: Advanced Modeling Tools-II

Advanced Modeling Tools 7-2
Pattern Feature Tool Enhanced 7-2
Creating a Linear Pattern 7-2
Creating a Circular Pattern 7-7
Creating a Polygon Pattern 7-10
Creating a Spiral Pattern 7-11
Creating a Pattern Along a Curve 7-12
Creating a General Pattern 7-14
Creating a Reference Pattern 7-14
Creating Patterns by Defining Boundary 7-15
Creating a Fill Pattern 7-16
Mirror Feature Tool 7-18
Mirror Face Tool 7-19
Mirror Geometry Tool 7-20
Sweeping Sketches Along the Guide Curves 7-20
Creating Swept Features 7-22
Creating Tubes or Cables 7-25
Creating Threads Enhanced 7-26
Creating Symbolic Threads 7-27
Creating Detailed Threads 7-31
Creating Shell Features 7-30
Editing Features 7-33
Editing a Hole Feature 7-33
Editing the Positioning of a Groove Feature 7-33
Editing the Parameters of Features 7-34
Editing the Parameters of Features with Rollback 7-34
Editing Sketches of the Sketch-based Features 7-34
Reordering Features 7-34
Creating Drafts 7-35
Creating Lattice 7-37
Measuring Objects 7-40
Tutorial 1 7-42
Tutorial 2 7-47
Tutorial 3 7-50
Tutorial 4 7-55
Tutorial 5 7-61
Self-Evaluation Test 7-65
Review Questions 7-66
Exercise 1 7-67
Exercise 2 7-67
Exercise 3 7-68

Evaluation Copy. Do not reproduce. For information visit www.cadcim.com

Chapter 8: Assembly Modeling-I

The Assembly Environment 8-2
Invoking the Assembly Environment 8-2
Invoking the Assembly Environment Using the New Dialog Box 8-2
Invoking the Assembly Environment in the Current Part File 8-2
Types of Assembly Design Approaches 8-3
Creating Bottom-up Assemblies 8-3
Placing Components in the Assembly Environment Enhanced 8-4
Changing the Reference Set of a Component 8-6
Applying Assembly Constraints to Components Enhanced 8-7
Applying Joints to Components in Assembly 8-16
Points to Remember while Assembling Components 8-17
Creating a Pattern Component in an Assembly 8-17
Replacing a Component in an Assembly 8-19
Moving a Component in an Assembly 8-20
Mirroring a Component in an Assembly 8-24
Modifying a Component in the Assembly File 8-27
Tutorial 1 8-28
Tutorial 2 8-41
Self-Evaluation Test 8-54
Review Questions 8-55
Exercise 1 8-56
Exercise 2 8-62
Exercise 3 8-66
Exercise 4 8-69

Chapter 9: Assembly Modeling-II

The Top-down Assembly Design Approach 9-2
Creating Components Using the Top-down Assembly Design Approach 9-2
Creating Subassemblies 9-4
Editing Assembly Constraints 9-5
Checking the Interference between the Components of an Assembly 9-5
Checking Interference Using the Simple Interference Tool 9-5
Checking Interference Between the Assembly Components 9-7
Checking Interference and Clearance, and Analyzing Cross-sections of Components Using the View Section Tool 9-12
Creating Exploded Views of an Assembly Enhanced 9-17
Digital Mock Up Application (DMU) 9-20
Tutorial 1 9-22
Tutorial 2 9-26
Tutorial 3 9-31
Tutorial 4 9-40
Self-Evaluation Test 9-47
Review Questions 9-47

Evaluation Copy. Do not reproduce. For information visit www.cadcim.com

Exercise 1 9-48
Exercise 2 9-53
Exercise 3 9-60

Chapter 10: Surface Modeling

Introduction to Surface Modeling 10-2
Invoking the Shape Studio Environment 10-2
Creating an Extruded Surface 10-2
Creating a Revolved Surface 10-3
Creating a Combined Surface 10-4
Creating a Surface Using the Through Curves Tool 10-6
Creating a Surface Using the Through Curve Mesh Tool 10-8
Creating a Surface Using the Four Point Surface Tool 10-9
Creating Planar Surfaces from 2D Sketches and Edges of Solid or Surface 10-10
Editing Surface Using the X-Form Tool 10-11
Creating an N-Sided Surface 10-12
Creating a Silhouette Flange Surface 10-15
Extending a Surface Using the Law Extension Tool 10-20
Creating a Surface Offset Using the Offset Surface Tool 10-24
Trimming and Extending a Surface Using the Trim and Extend Tool 10-24
Trimming a Sheet by Using the Trimmed Sheet Tool 10-26
Creating a Surface Using the Studio Surface Tool 10-28
Creating a Surface between Two Walls Using the Styled Blend Tool 10-31
Creating Surfaces Using the Styled Sweep Tool 10-36
Sewing Individual Surfaces into a Single Surface 10-37
Adding Thickness to a Surface 10-38
Adding a Draft 10-39
Tutorial 1 10-40
Tutorial 2 10-46
Self-Evaluation Test 10-54
Review Questions 10-55
Exercise 1 10-55
Exercise 2 10-57

Chapter 11: Advanced Surface Modeling

Creating Curves from Bodies 11-2
Creating Intersection Curves 11-2
Creating Section Curves 11-3
Creating Isoparametric Curves 11-8
Projecting Curves 11-10
Advanced Surface Modeling Tools 11-14
Creating Emboss Body on a Sheet or Solid Body 11-14
Creating Face Blend Features 11-15
Creating Bridge Surface Features 11-21
Tutorial 1 11-23
Tutorial 2 11-35
Tutorial 3 11-43

Evaluation Copy. Do not reproduce. For information visit www.cadcim.com

Self-Evaluation Test 11-56
Review Questions 11-56
Exercise 1 11-57
Exercise 2 11-58

Chapter 12: Generating, Editing, and Dimensioning the Drawing Views

The Drafting Environment 12-2
Invoking the Drafting Environment 12-2
Invoking the Drafting Environment Using the Drawing Template from the New Dialog Box 12-2
Invoking the Drafting Environment in the Current Part File 12-3
Editing the Drawing Sheet Parameters in the Drafting Environment 12-6
Types of Drawing Views in NX 12-6
Base View 12-6
Projected View 12-6
Detail View 12-6
Section View 12-6
Auxiliary View 12-7
Half-Section View 12-7
Revolved Section View 12-7
Break-Out Section View 12-7
Broken View 12-7
Generating Drawing Views 12-7
Generating Views Using the View Creation Wizard Tool 12-7
Generating the Base View 12-12
Generating the Orthographic Drawing Views Using the Projected View Tool 12-14
Generating the Detail View Using the Detail View Tool 12-16
Creating a Section Line 12-19
Generating Section Views Using the Section View Tool 12-20
Generating the Break-Out Section View 12-25
Generating the Broken View 12-27
Manipulating the Drawing Views 12-29
Moving the Drawing Views Using the Move/Copy View Tool 12-29
Aligning the Drawing Views Using the Align View Tool 12-30
View Boundary 12-33
Section in View Tool 12-33
Inserting a Drawing Sheet Using the New Sheet Tool 12-35
Modifying the Properties of the Generated Drawing View 12-35
Modifying the Scale Value of the Drawing View 12-35
Adding Dimensions to the Drawing Views 12-37
Generating Exploded Views of an Assembly 12-42
Creating Parts List and Associative Balloons 12-42
Creating a Parts List for an Assembly 12-42
Creating Associative Balloons 12-43
Creating a Tabular Note (Title Block) 12-44
Adding Multiline Text to a Drawing Sheet 12-46

Evaluation Copy. Do not reproduce. For information visit www.cadcim.com

Printing Tools 12-46
Print 12-47
Plot 12-47
Tutorial 1 12-48
Tutorial 2 12-54
Tutorial 3 12-58
Self-Evaluation Test 12-63
Review Questions 12-64
Exercise 1 12-65
Exercise 2 12-65

Chapter 13: Synchronous Modeling

Introduction 13-2
Synchronous Modeling Tools 13-2
Move 13-2
Move Edge 13-5
Pull Face 13-7
Offset Region 13-8
Offset Edge 13-10
Replace Face 13-11
Resize Blend 13-12
Reorder Blends 13-13
Resize Chamfer 13-14
Label Chamfer 13-14
Label Notch Blend 13-15
Radiate Face 13-15
Delete Face 13-16
Copy Face 13-18
Cut Face 13-20
Paste Face 13-20
Mirror Face 13-21
Pattern Face 13-22
Make Coplanar 13-23
Make Coaxial 13-24
Make Tangent 13-26
Make Symmetric 13-27
Make Parallel 13-28
Make Perpendicular 13-30
Make Offset 13-31
Linear Dimension 13-32
Angular Dimension 13-34
Radial Dimension 13-36
Group Face 13-37
Edit Cross Section 13-38
Tutorial 1 13-38
Tutorial 2 13-44
Self-Evaluation Test 13-52

Evaluation Copy. Do not reproduce. For information visit www.cadcim.com

Review Questions 13-52
Exercise 1 13-53
Exercise 2 13-54

Chapter 14: Sheet Metal Design

The Sheet Metal Module 14-2
Setting the Sheet Metal Part Properties 14-4
Creating the Base Feature 14-8
Adding Flanges to a Sheet Metal Part 14-9
Creating Contour Flanges 14-16
Creating Lofted Flanges 14-17
Adding a Jog to the Sheet 14-18
Bending the Sheet Metal Part 14-19
Unbending the Sheet Metal Part 14-19
Rebending the Sheet Metal Part 14-20
Filleting or Chamfering Corners 14-20
Closing the Corners of a Sheet Metal Part 14-21
Creating Dimples in a Sheet Metal Part 14-25
Creating Louvers in a Sheet Metal Part 14-27
Creating Drawn Cutouts in a Sheet Metal Part 14-29
Creating Beads in a Sheet Metal Part 14-29
Adding Gussets to a Sheet Metal part 14-33
Adding Hems 14-36
Creating a Sheet Metal Part Using Solid Body 14-39
Converting a Solid Part into a Sheet Metal Part 14-39
Ripping the Corners of a Solid Part 14-40
Creating the Flat Pattern of a Sheet Metal Part 14-41
    Creating the Flat Pattern 14-41
    Creating the Flat Solid 14-42
    Exporting a Flat Pattern 14-43
Renewing Features 14-43
Tutorial 1 14-45
Tutorial 2 14-55
Self-Evaluation Test 14-61
Review Questions 14-62
Exercise 1 14-63
Exercise 2 14-64

Evaluation Copy. Do not reproduce. For information visit www.cadcim.com

CHAPTERS AVAILABLE FOR FREE DOWNLOAD

In this textbook, two chapters have been given for free download. You can download these chapters from our website *www.cadcim.com*. To download these chapters, use the following path: *Textbooks > CAD/CAM > Siemens > Siemens NX > Siemens NX 2023 for Designers, 15th Edition > Chapters for Free Download* and then click on the chapter name that you want to download.

Chapter 15: Introduction to Injection Mold Design

Introduction to Injection Mold Design 15-2
Invoking the Mold Environment 15-2
Various Methods For Creating Mold Design 15-4
- Manual Method 15-4
- Semi Automatic 15-4
- Automatic 15-4

Analysis of Part 15-4
- Mold Design Validation 15-5
- Check Wall Thickness 15-6
- Easy Fill Advanced 15-7

Mold Wizard 15-15
- Initialize Project 15-15
- Mold CSYS 15-16
- Shrinkage 15-17
- Check Regions 15-18
- Patch Surface 15-19
- Define Regions 15-20
- Design Parting Surface 15-20
- Edit Parting and Patch Surface 15-21
- Workpiece 15-21
- Cavity Layout 15-22
- Define Cavity and Core 15-25
- Mold Base Library 15-26
- Standard Part Library 15-26
- Design Fill 15-27
- Runner 15-28
- Slider and Lifter Library 15-29
- Slider and Lifter Library 15-30
- Design Ejector Pin 15-31
- Ejector Pin Post Processing 15-33
- Sub Insert Library 15-33
- Pocket 15-34
- View Manager 15-34
- Cooling 15-35
- Assembly Drawings 15-39
- Component Drawing 15-40

Tutorial 1 15-41
Self-Evaluation Test 15-76
Review Questions 15-77
Exercise 1 15-78

Evaluation Copy. Do not reproduce. For information visit www.cadcim.com

Chapter 16: Concepts of Geometric Dimensioning and Tolerancing

History of Tolerances and Allowances 16-2
Methods of Tolerancing 16-2
    Limit Dimensioning 16-3
    Plus and Minus Tolerancing 16-4
Geometric Tolerances 16-4
Form Tolerances 16-10
Profile Tolerances 16-19
Orientation Tolerances 16-22
Location Tolerances 16-25
Runout Tolerances 16-29
Fits 16-33
    Hole Basis System 16-33
    Shaft Basis System 16-34
Standards of Fits 16-39
    Standard Inch Fits 16-39
    Standard Metric Fits 16-42
Tutorial 1 16-46
Self-Evaluation Test 16-52
Review Questions 16-53
Exercise 1 16-53

Evaluation Copy. Do not reproduce. For information visit www.cadcim.com

PROJECTS AVAILABLE FOR FREE DOWNLOAD

In this textbook, four projects are available for free download. You can download these projects from our website **www.cadcim.com**. To download these projects, follow the path: *Textbooks > CAD/CAM > Siemens > Siemens NX > Siemens NX 2023 for Designers, 15th Edition > Projects for free download* and then click on the project name that you want to download.

Note

For additional projects, visit **www.cadcim.com** and follow the path: *Textbooks > CAD/CAM > others > Parametric Solid Modeling Projects> Parametric Solid Modeling Projects.*

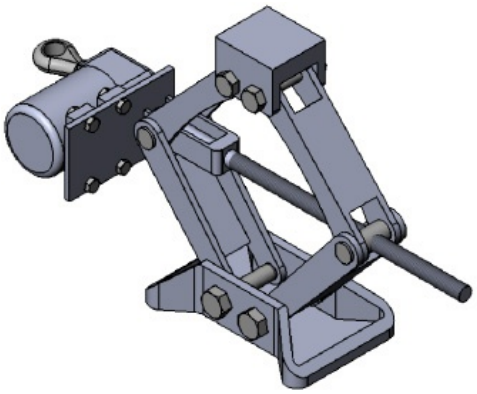

Project 1: *Car Jack Assembly*

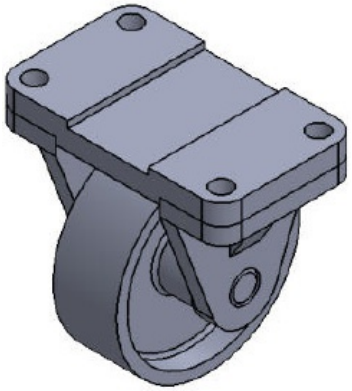

Project 2: *Wheel Assembly*

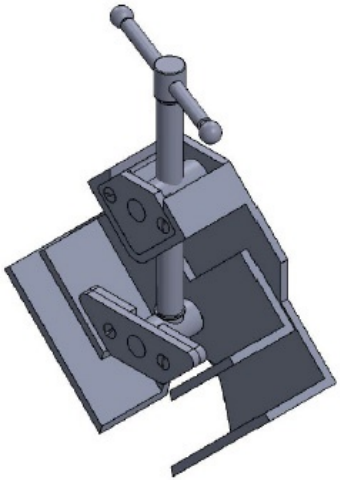

Project 3: *Angle Clamp Assembly*

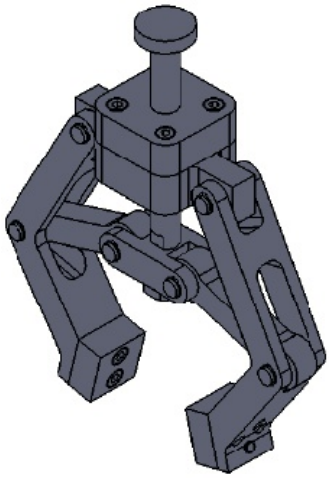

Project 4: *Pneumatic Gripper Assembly*

Evaluation Copy. Do not reproduce. For information visit www.cadcim.com