Chapter 3

Adding Geometric and Dimensional Constraints to Sketches

Learning Objectives

After completing this chapter, you will be able to:

- *Understand the concept of under-constrained, fully-constrained, and over-constrained sketches*
- *Understand different types of dimensions*
- *Measure the distance value between entities in a sketch*
- *Measure the angle between entities*
- *Understand different types of geometric constraints*
- *Configure settings for applying constraints automatically while sketching*
- *Force additional geometric constraints to sketches*
- *View and delete geometric constraints from sketches*
- *Animate a fully-constrained sketch*

CONSTRAINING SKETCHES

In the previous chapter, you learned to draw sketches and add basic dimensions to them. You must have noticed that the dimensions are updated when you drag the sketched entities. Therefore, these dimensions do not constrain the sketch. In this chapter, you will learn to completely constrain the sketches to restrict their degrees of freedom and make them stable. The stability ensures that the size, shape, and location of the sketches do not change unexpectedly with respect to the surrounding. Therefore, it is always recommended to constrain the sketches. The geometrical constraints are applied first, some of which get automatically applied while drawing. After applying the remaining geometrical constraints, you need to add dimensional constraints using dimension tools. You will learn more about dimension tools later in this chapter.

CONCEPT OF CONSTRAINED SKETCHES

After drawing and applying the constraints, the sketch can attain any one of the following three stages:

1. Under-Constrain
2. Fully-Constrain
3. Over-Constrain

These stages are described next.

Under-Constrain

An under-constrained sketch is the one in which all the degrees of freedom of each entity are not completely defined using the geometric and dimensional constraints. The elements of the sketch that are displayed in light brown color are under-constrained, as shown in Figure 3-1. You need to apply additional constraints to them in order to constrain their degree of freedom. The under-constrained sketches tend to change their position, size, or shape unexpectedly. Therefore, it is necessary to fully define the sketched elements.

Fully-Constrain

The fully-constrained sketch is the one in which all degrees of freedom of each element are defined using the geometric and dimensional constraints. As a result, the sketch cannot change its position, shape, or size unexpectedly. These dimensions can change only if they are modified deliberately by the user. The elements of a fully-constrained sketch are displayed in black color. Figure 3-2 shows a fully-constrained sketch.

Over-Constrain

An over-constrained sketch is the one in which some additional constraints are applied. When you attempt to assign dimensions to a line that has already been dimensioned, an alert message box will appear, informing you that the dimension cannot be modified as the sketch is over-defined or over-constrained, as illustrated in Figure 3-3. It is always recommended to delete additional constraints and make the sketch fully-constrained before exiting the sketching environment.

Evaluation Copy. Do not reproduce. For information visit www.cadcim.com



Figure 3-1 *An under-constrained sketch*

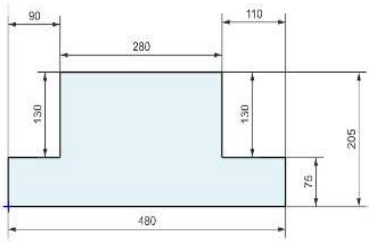

Figure 3-2 *A fully-constrained sketch*

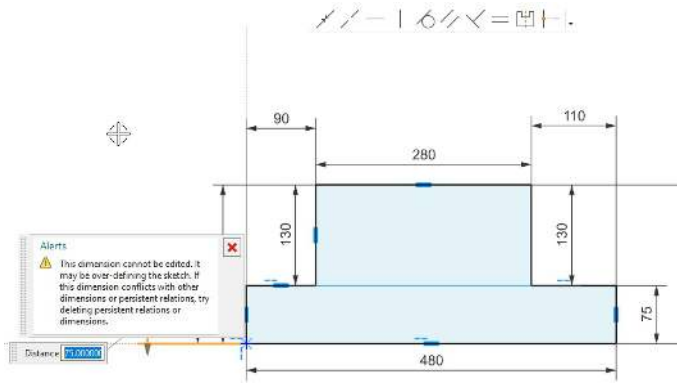

Figure 3-3 *The* ***Alerts*** *message box of over-constrained sketch*

While applying the geometric and dimensional constraints, the status area in the Status Bar displays the number of constraints needed to fully constrain the sketch. After fully constraining the sketch, a message will be displayed in the status area of the **Status Bar** that the sketch is fully constrained.

DIMENSIONING SKETCHES

After creating a sketch, you need to apply different types of dimensions (dimensional constraints) to it as the first four dimensioning tools available in the **Dimensions** drop-down have already been discussed in Chapter 2. The purpose of dimensioning is to control the size of the sketch and to place it with reference to some other entity. You need to lock the dimensions to fully constrain the sketch. Also, sometimes you may need to add additional dimensions to the sketch to fully constrain it. In NX, you can apply the dimensions by using the tools grouped together in the **Solve** group of the **Home** tab in the sketching environment. You can click on the **Group Options** arrow at the bottom of the **Solve** group to display a flyout and then choose the required tools to add them in the group. Figure 3-4 shows the **Solve** group with all the tools. The dimensioning tools available in this group are listed below:

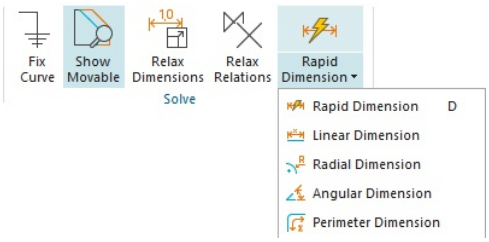

Figure 3-4 *The* ***Solve*** *group*

1. Rapid Dimension
2. Linear Dimension
3. Radial Dimension
4. Angular Dimension
5. Perimeter Dimension

Evaluation Copy. Do not reproduce. For information visit www.cadcim.com

Applying Dimensions by Using the Rapid Dimension Tool

Ribbon: Home > Solve > Dimension drop-down *(Customize to Add)*
Menu: Insert > Dimensions > Rapid

The **Rapid Dimension** tool is used to apply dimensions depending upon the entity selected. For example, if you select an arc, the radial dimension will be applied. Similarly, if you select a circle, the diameter dimension will be applied and if you select a line, the linear dimension will be applied. Note that if you select an inclined line and move the cursor parallel to that line; an aligned dimension will be applied. If you move the cursor vertically upward or downward, a horizontal dimension will be applied. Similarly, if you move the cursor horizontally right or left, a vertical dimension will be applied.

It is recommended that you use this tool to apply different types of dimensions as it saves the time required for selecting various dimensioning tools. To apply rapid dimensions, choose the **Rapid Dimension** tool from the **Solve** group of the **Home** tab; the **Rapid Dimension** dialog box will be displayed and you will be prompted to select the object to be dimensioned. Now the dimension will be applied based on the selection procedure adopted while selecting objects. Figure 3-5 shows the radial and linear dimensions created by using the tool.

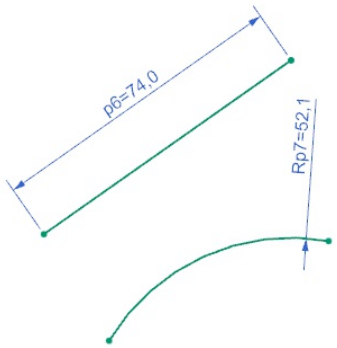

Figure 3-5 *The radial and linear dimensions created by using the* ***Rapid Dimension*** *tool*

Applying Linear Dimensions

Ribbon: Home > Solve > Dimension drop-down *(Customize to Add)*
Menu: Insert > Dimensions > Linear

The **Linear Dimension** tool is used to apply horizontal, vertical, or aligned dimension to a selected line or between two points. The points can be the endpoints of a line or arc, or the center points of two circles, arcs, ellipses, or parabola, or any set of points that can be identified. To apply linear dimension to a sketch, choose the **Linear Dimension** tool from the **Dimension** group of the **Home** tab; the **Linear Dimension** dialog box will be displayed, as shown in Figure 3-6.

Evaluation Copy. Do not reproduce. For information visit www.cadcim.com

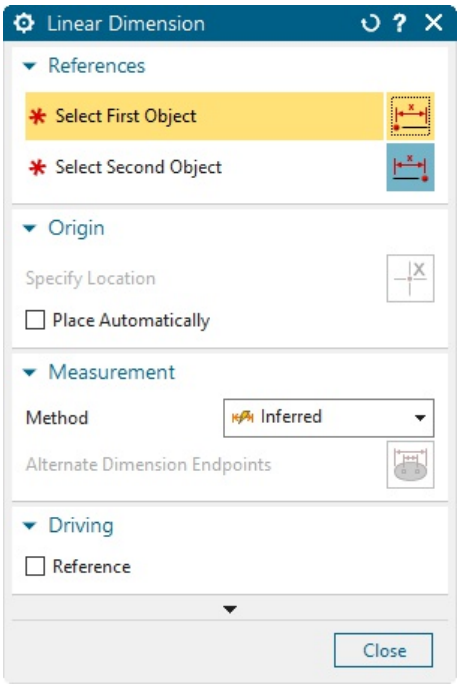

***Figure 3-6** The **Linear Dimension** dialog box*

The options in this dialog box are discussed next.

References Rollout

The options in this rollout are used to select the object to be dimensioned. Using the options in this rollout, you can select points or linear entities for applying the dimension.

Origin Rollout

This rollout is used to define the position of the dimension text. You can place the dimension at the required location. Place the dimension above or below (in case of horizontal) and left or right (in case of vertical) of the selected object by clicking on the desired place inside the drawing window. On placing the dimension, an edit box will be displayed. Enter the required value in this edit box and then press Enter. Next, press Esc to exit the dialog box. Figure 3-7 shows the horizontal, vertical, and aligned dimensions applied to a line. The **Place Automatically** check box is used to place the dimension automatically according to the object.

Evaluation Copy. Do not reproduce. For information visit www.cadcim.com

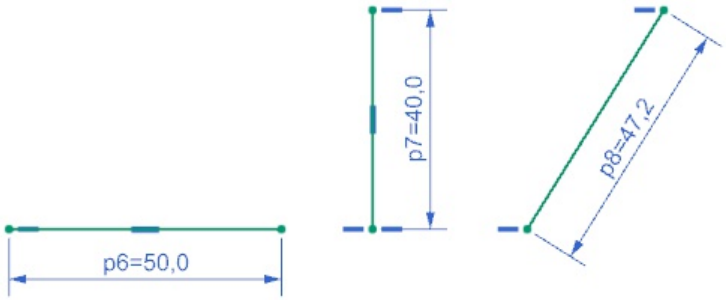

Figure 3-7 *The linear dimension created for a horizontal line, vertical line, and an inclined line*

Measurement Rollout

The options available in the **Method** drop-down list of this rollout are discussed next.

Inferred

This option is used to apply dimensions between entities based on the entities selected for dimensioning and the placement point.

Horizontal

This option is used to apply horizontal dimension between entities. Note that if you select an entity that has a slant angle and you select the Horizontal option then horizontal dimension will be applied to that entity.

Vertical

This option is used to apply vertical dimension between entities. Even if you select an entity that has a slant angle, a vertical dimension will be applied.

Point-to-Point

This option is used to apply dimension between two points. You can select a set of points or a linear entity for applying dimension by using this option. Note that on selecting a linear entity, the dimension between its end points will be applied, depending upon the entity selected, refer to Figure 3-7.

Perpendicular

This option is used to create the perpendicular dimension between a linear object and a point. It is mandatory that any one of the objects selected is a linear object.

Cylindrical

This option is used to apply dimension between cylindrical sections of objects.

Driving Rollout

In the **Driving** rollout, the **Reference** check box is used to convert a dimension into a reference dimension instead of a driving dimension and the **Expression** check box which used for driving dimensions.

Evaluation Copy. Do not reproduce. For information visit www.cadcim.com



Note

If you create a redundant dimension, NX may inform you that the sketch is over-constrained. When you convert a dimension into a reference dimension, the sketch will no longer be over-constrained.

Settings Rollout

There are two buttons in this rollout and they are discussed next.

Settings



This button is used to change the style of the dimensions that are being applied.

Select Dimension to Inherit



This button allows you to apply the style setting of an existing dimension to the dimensions being applied.

The **Enable Dimension Scene Dialogs** check box allows you to select access handles directly on different parts of the dimension to edit dimension settings.

Applying Radial Dimensions

Ribbon:	Home > Solve > Dimension drop-down *(Customize to Add)*
Menu:	Insert > Dimensions > Radial



The **Radial Dimension** tool is used to apply the radial dimension to an arc or diametral dimension to a circle. To apply radial dimension, choose the **Radial Dimension** tool from the **More Gallery** of the **Solve** group of the **Home** tab, refer to Figure 3-4; the **Radial Dimension** dialog box will be displayed and you will be prompted to select an arc or circle to be dimensioned. Select the object to be dimensioned and then place the dimension. On placing the dimension, double-click on the dimension to edit its value. Next, press Esc to exit the **Radial Dimension** dialog box. You can also select the type of dimension to be applied from the **Method** drop-down list in the **Measurement** rollout. In this drop-down list, the **Radial** option is used to define the radius and the **Diametral** option is used to define the diameter dimensions. However, if you select the **Inferred** option from the drop-down list, radius dimensions will be applied to arcs and diameter dimensions will be applied to circles automatically. Figure 3-8 shows the diametral dimension applied to a circle and Figure 3-9 shows the radial dimension applied to an arc. Rest of the options in the **Radial Dimension** dialog box are same as those discussed in the **Linear Dimension** dialog box.

Evaluation Copy. Do not reproduce. For information visit www.cadcim.com

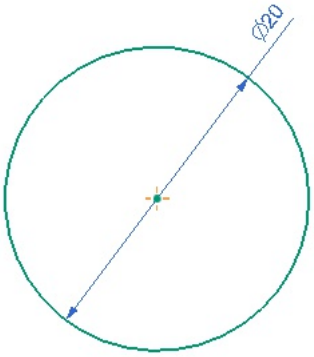

Figure 3-8 The diametral dimension applied to a circle

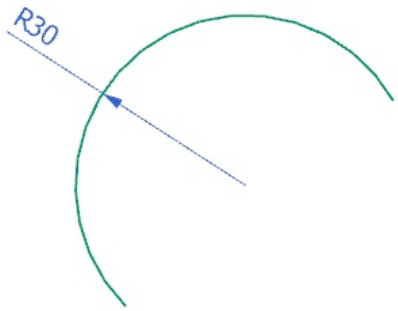

Figure 3-9 The radial dimension applied to an arc

Applying Angular Dimensions

Ribbon:	Home > Solve > Dimension Drop-Down >Angular Dimension
Menu:	Insert > Dimensions > Angular



The **Angular Dimension** tool is used to apply angular dimension between entities. Whenever an angular dimension is applied using the **Angular Dimension** tool, the angle is always measured in the counterclockwise direction.

To apply angular dimension, choose the **Angular Dimension** tool from the **Solve** group of the **Home** tab, refer to Figure 3-4; the **Angular Dimension** dialog box will be displayed and you will be prompted to select an object to be dimensioned. Select the entities between which the angular dimension needs to be applied and then place the dimension. Figure 3-10 shows different types of angular dimensions applied to a sketch. Rest of the options in the **Angular Dimension** dialog box are same as discussed earlier in **Linear Dimension** dialog box.

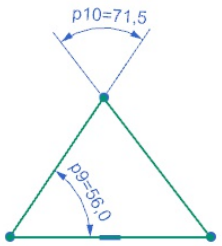

Figure 3-10 Angular dimensions applied between the entities

Applying Perimeter Dimensions

Ribbon:	Home > Solve > Dimensions Drop-down > Perimeter Dimension
Menu:	Insert > Dimensions > Perimeter

The **Perimeter Dimension** tool is used to apply the circumferential or perimeter dimension. After applying the perimeter dimension, all the dimensions of the selected objects are locked. To apply the perimeter dimension, choose the **Perimeter Dimension** tool from the **Dimensions** drop-down of the **Solve** group of the **Home** tab; the **Perimeter Dimension** dialog box will be displayed. Select the object and then choose the **OK** button from this dialog box; the perimeter dimension will be applied to the selected object. Note that this dimension will not be displayed in the drawing window.

You can also apply the perimeter dimension to a closed sketch. To do so, invoke the **Perimeter Dimension** dialog box and then select all the entities of the closed sketch one by one. Next, choose the **OK** button from the **Perimeter Dimension** dialog box; the dimension will be applied

Evaluation Copy. Do not reproduce. For information visit www.cadcim.com

to the sketch. Now, if you modify the dimension of any one of the entities, the dimension of other entities will also be modified such that the total perimeter of the sketch remains the same.

GEOMETRIC CONSTRAINTS

Geometric constraints are the logical operations that are performed on the sketched entities to relate them to the other sketched entities using the standard properties such as collinearity, concentricity, tangency, and so on. These constraints reduce the degrees of freedom of the sketched entities and make the sketch more stable so that it does not change its shape and location unexpectedly at any stage of the design. All geometric constraints have separate symbols associated with them. These symbols can be seen on the sketched entities when the constraints are applied to them. In the sketching environment of NX, you can add various types of geometric constraints. Some of these constraints are added automatically while sketching. Additionally, you can add more constraints to the sketch manually.

Applying Additional Constraints Individually



In NX, you can apply additional constraints manually by using the **Sketch Scene Bar** available in the Workspace window as shown in Figure 3-11. To apply a constraint, select the entities and then select the required constraint from the **Sketch Scene Ba**r option. Various constraints that can be applied to the sketched entities in NX are discussed next.

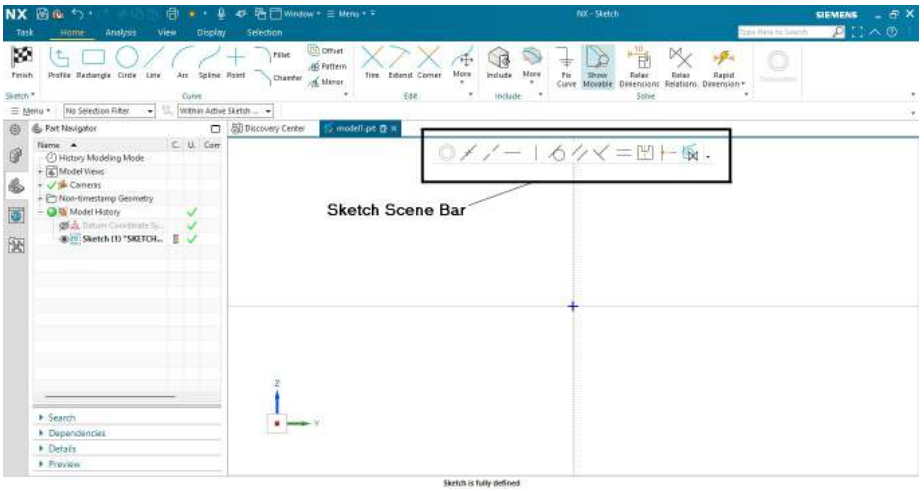

Figure 3-11 *The* ***Sketch Scene Bar*** *options*

Make Coincident



The Coincident constraint forces two or more keypoints to share the same location. The keypoints that can be used to apply this constraint include the endpoints, center points, control points of splines, and so on. To apply this constraint in Sketching environment choose the **Make Coincident** button from the **Sketch Scene Bar** option. Next, select the keypoints of the sketched entities that are to be made coincident. Figure 3-12 shows the endpoints of the two lines selected to be made coincident and Figure 3-13 shows the sketch after applying the constraint.

Evaluation Copy. Do not reproduce. For information visit www.cadcim.com

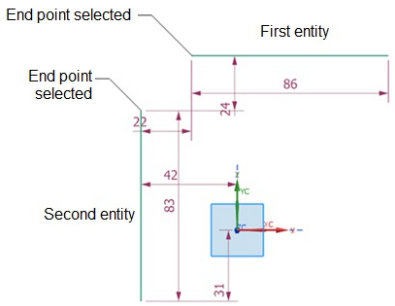

Figure 3-12 The endpoints of the first and second entities selected

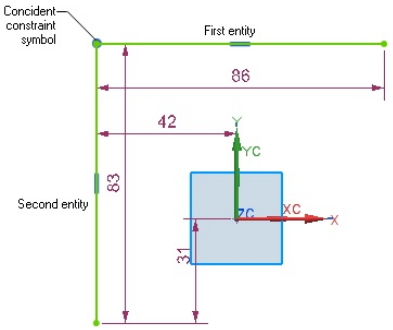

Figure 3-13 The sketch after applying the Coincident constraint

Make Horizontal

The Horizontal constraint forces the selected line segment to become horizontal, irrespective of its original orientation. To apply this constraint in sketching environment, choose the **Make Horizontal** button from the **Sketch Scene Bar** option and then select the entity; the selected line segment will be forced to become horizontal.

Make Vertical

The Vertical constraint is similar to the Horizontal constraint with the only difference that this constraint will force the selected line to become vertical.

Make Midpoint Aligned

This constraint forces the selected point to be placed in line with the midpoint of the selected line or curve. Note that this constraint is available only when the selected curve is an open entity such as a line segment or an arc. Also, it is important to note that you need to select the curve anywhere other than at its endpoints.

Make Parallel

The Parallel constraint forces a set of selected line segments or ellipse axes to become parallel to each other. To apply this constraint in sketching environment, choose the **Make Parallel** button from the **Sketch Scene Bar** option; you will be prompted to select the objects to constrain. Select the set of line segments or ellipses; the selected line segments or axes of the ellipse will become parallel to each other. Figure 3-14 shows two line segments before and after applying this constraint.

Make Perpendicular

The Perpendicular constraint forces a set of selected line segments or ellipse axes to become normal to each other. Figure 3-15 shows two line segments before and after applying this constraint.

Evaluation Copy. Do not reproduce. For information visit www.cadcim.com

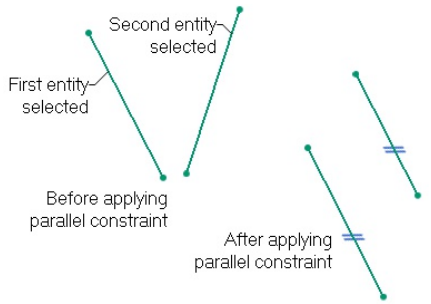

Figure 3-14 *Applying the Parallel constraint*

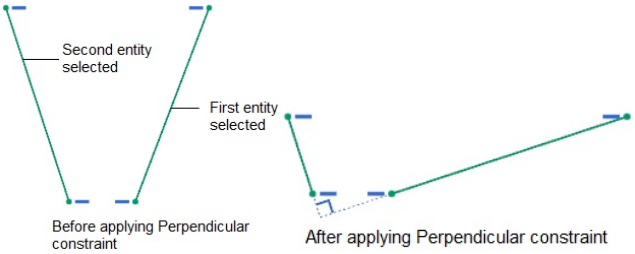

Figure 3-15 *Sketch before and after applying the Perpendicular constraint*

Make Tangent

The Tangent constraint forces the selected line segment or curve to become tangent to another curve. To apply this constraint in sketching environment, choose the **Make Tangent** button from the **Sketch Scene Bar** option you will be prompted to select the entities to be constrained. Select a line and a curve or select two curves; the selected line or curve will become tangent to the other selected curve. Figures 3-16 and 3-17 show the use of the Tangent constraint.

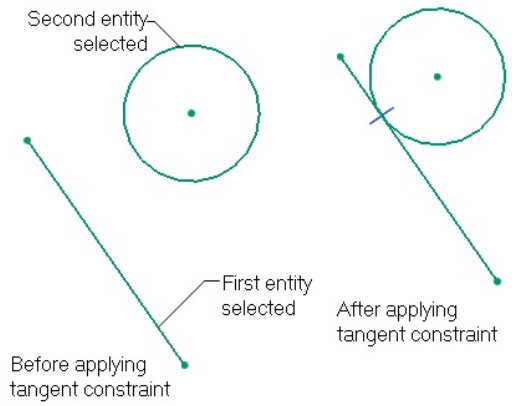

Figure 3-16 *Sketch before and after applying the Tangent constraint*

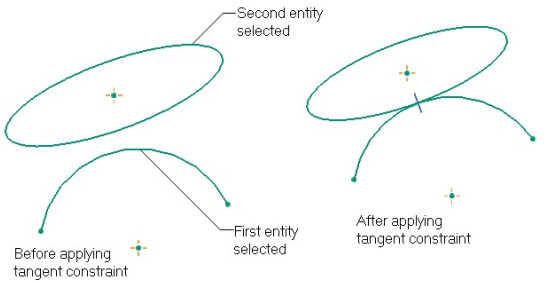

Figure 3-17 *Sketch before and after applying the Tangent constraint*

Note

In NX, you can move a geometry or a curve that has a persistent relation by using the ***Relax Relation*** *option available in the* ***Solve*** *group of the* ***Home*** *Tab.*

Make Equal

This constraint forces the selected curves to become equal in radius or length.

Evaluation Copy. Do not reproduce. For information visit www.cadcim.com

Make Collinear



This constraint forces the selected line segments to lie along the same line.

Make Uniform Scale



The Uniform Scale constraint ensures that if you modify the distance between the endpoints of a spline, the entire spline will be scaled uniformly. This option appears only when you select the **Create Persistent Relations** option from the **Sketch Scene Bar**.

Make Point On String



The Point On String constraint is used to place selected keypoints on a projected curve or line. As a result, the selected point always lies on the projected curve.

Make Perpendicular to String



This constraint is used to create a perpendicular constraint between a sketch curve and a recipe curve.



Make Tangent to String

This constraint is used to create a tangent constraint between a sketch curve and a recipe curve.



Note

The curves that are associatively projected to the sketch are called Recipe Curves.

Applying Symmetry Constraint



In NX, you can make two selected entities symmetric about a line by using the **Make Symmetric** tool. To make two entities symmetric, invoke the **Make Symmetric** tool from the **Sketch Scene Bar**; the **Make Symmetric** dialog box will be displayed and you will be prompted to select the first object to move. Select the first object; you will be prompted to select the second object to that will remain stationary. Select the second object; you will be prompted to select a line or plane as the centerline. After selecting the centerline, you will notice that the selected objects have become symmetric about the centerline. Also, the selected centerline has converted into a reference element. This is because the **Convert Symmetry Line to Reference** check box is selected by default in the dialog box. Next, choose the **Close** button; the **Make Symmetric** dialog box will be closed.

Converting a Sketch Entity or Dimension into a Reference Entity or Reference Dimension



The **Convert To/From Reference** option is used to convert or retain the reference property of a sketched entity or a dimension. Generally, reference elements are created for assigning the axis of revolution or for applying dimensions with reference to an entity. To convert any of these sketched entities or dimensions into a reference element, choose the **Convert To/From Reference** option from the shortcut menu displayed on selecting the the sketched entity. Select the **Convert to Reference** option from the shortcut menu refer to Figure 3-18.

Evaluation Copy. Do not reproduce. For information visit www.cadcim.com



Figure 3-18 *Reference Geometry option in the shorcut menu*

Creating Alignment Constraints

In NX, you can control the creation of alignment constraints (horizontal or vertical). In the releases prior to NX 12.0, if an entity was placed into the sketch after snapping the existing point of the sketched entity horizontally or vertically, the respective constraint would be applied between the entities by default. NX 12 onwards, these alignment constraints will not be applied by default. However, you can control the application of these alignment constraints before you start a file. To do so, choose **Menu > File > Utilities > Customer Defaults** from the Welcome screen of NX; the **Customer Defaults** dialog box will be displayed, refer to Figure 3-19.



Note

*The **Customer Defaults** dialog box can be invoked only in the Modeling environment of NX.*

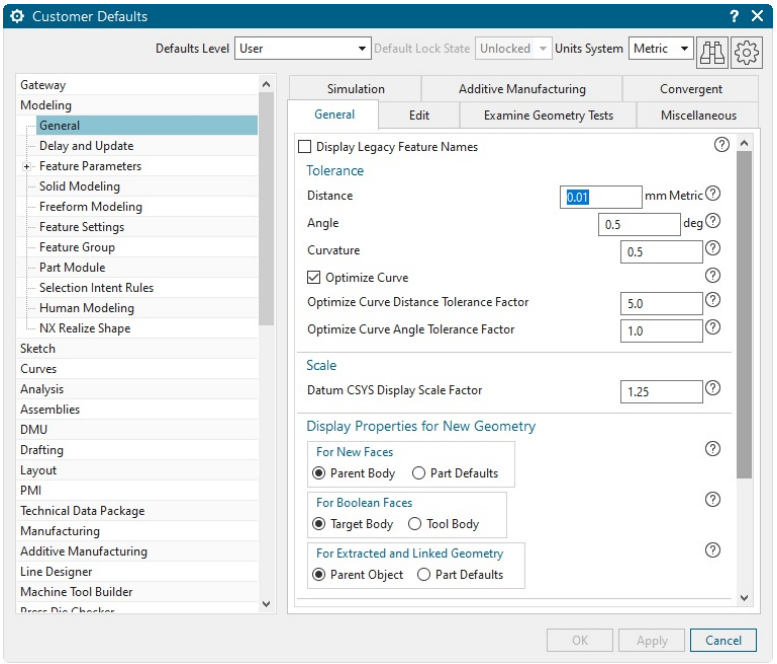

Figure 3-19 *The **Customer Defaults** dialog box*

In this dialog box, expand the **Sketch** node from the list box available at the left by clicking on it. Choose the **Inferred Constraints and Dimensions (Legacy)** sub-node; the options related it to it will be displayed on the right. Next, select the **Create Alignment Constraints(Legacy)** check box available under the **Constraints** tab.

Evaluation Copy. Do not reproduce. For information visit www.cadcim.com

After selecting this check box, the alignment constraints will be applied between entities while sketching. Figure 3-20 shows a sketch in which the right circle is placed horizontally after snapping the mid point of the left circle; the horizontal alignment constraint is applied between the centers. Notice that no alignment constraint is applied as the **Create Alignment Constraints (Legacy)** check box is cleared in the **Customer Defaults** dialog box, refer to Figure 3-21.

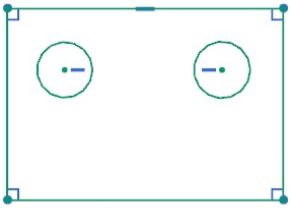

Figure 3-20 *Sketch after selecting the* ***Create Alignment Constraints*** *check box*

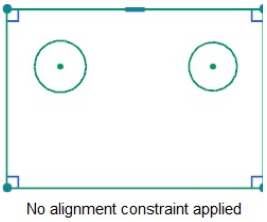

Figure 3-21 *Sketch after the* ***Create Alignment Constraints*** *check box is cleared*



Note

To reflect the changes made in the ***Customer Defaults*** *dialog box, you need to restart the NX session.*

TUTORIALS

From this chapter onward, you will use constraints and parametric dimensions to complete the model.

Tutorial 1

In this tutorial, you will draw the profile of the model shown in Figure 3-22. The profile is shown in Figure 3-23. The profile should be symmetric about the origin. Also, you will use the parametric dimensions to complete the sketch. **(Expected time: 30 min)**

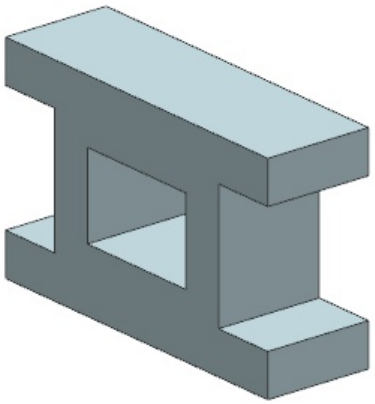

Figure 3-22 *Model for Tutorial 1*

Evaluation Copy. Do not reproduce. For information visit www.cadcim.com

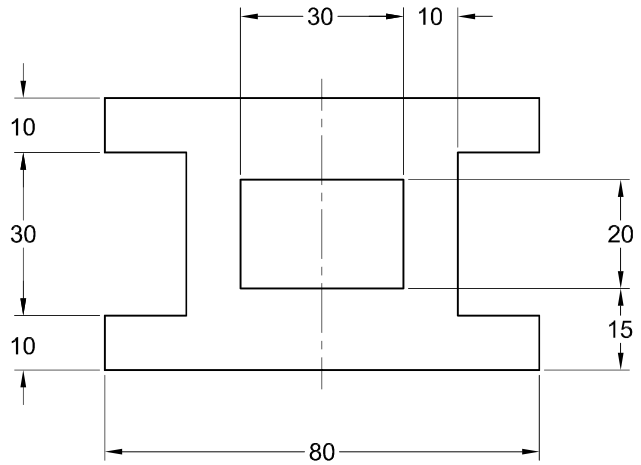

Figure 3-23 *Sketch for Tutorial 1*

The following steps are required to complete this tutorial:

a. Start a new file.
b. Draw the outer profile of the sketch using the **Profile** tool.
c. Add the geometric constraints to the outer loop and modify its dimensional constraints.
d. Draw a rectangle inside the outer loop using the **Rectangle** tool.
e. Add dimensions to the rectangle to complete the sketch.
f. Save the sketch and close the file.

Starting a New File and Invoking the Sketch Environment

1. Start a new file by using the **Model** template. To do so, choose the **New** button from the **File** tab of the **Ribbon**; the **New** dialog box is displayed. Next, select the **Model** template from the **Templates** rollout, and then enter **c03tut1** as the name of the document in the **Name** text box.

2. Choose the button on the right of the **Folder** text box; the **Choose Directory** dialog box is displayed. Next, browse to *C:\NX\c03* and then choose the **OK** button ; the new file is started in the Modeling environment.

3. Choose the **Sketch** tool from the **Construction** group; the **Create Sketch** dialog box is displayed. Select the XC-ZC plane as the sketching plane and choose the **OK** button from the dialog box.

Drawing the Outer Loop and Adding Sketch Constraints

If the sketch consists of more than one closed loop, it is recommended that you first draw the outer loop and then add all the required constraints and dimensions to it. This makes it easier to draw and dimension the inner loops. Next, you need to draw the inner loop.

Evaluation Copy. Do not reproduce. For information visit www.cadcim.com

1. Choose the **Profile** tool from the **Curve** group of the **Home** tab; you are prompted to select the first point of the line or press and drag the left mouse button to begin with the arc creation.

2. Draw the sketch around the origin following the sequence shown in Figure 3-24. The sketch is unsymmetrical at this stage. But after adding the constraints and modifying the dimensions, it will become symmetrical. You can use the help lines to draw the sketch. For your reference, the sequence in which the lines are needed to be drawn in the sketch are indicated by numbers.

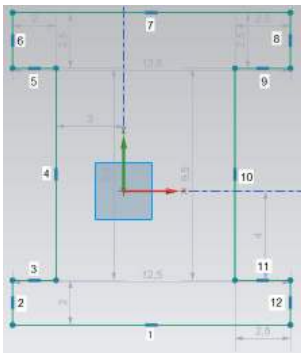

Figure 3-24 *The outer loop of the profile and the sequence in which lines have to be drawn*

Next, you need to apply the geometric constraints and modify dimensions. But before you do that, it is recommended that you turn on the display of constraints if not already on.

3. Choose the Geometric Constraints tools from the **Sketch Scene Bar** option from the workspace.

4. Choose the **Make Equal** option from the **Sketch Scene Bar**; the **Make Equal dialog box is displayed,** choose the **Equal Length** radio button and then select lines 1 and 7. The symbol for the equal length constraint is displayed on both the sketch members indicating that this constraint is applied between the two selected entities, then click on the **OK** button in the **Make Equal** dialog box.

5. Similarly, apply the equal length constraint between lines 8 and 6, 6 and 2, 2 and 12, 12 and 8, 3 and 11, 9 and 5, and 10 and 4. Next, exit the dialog box.

Now, you need to make this sketch symmetric about horizontal and vertical datum axes.

6. Choose the **Make Symmetric** tool from the **Sketch Scene Bar**; the **Make Symmetric** dialog box is displayed and you are prompted to select the first object to apply symmetry.

7. Select line 2; you are prompted to select the second object. Select line 12; you are prompted to select the centerline.

8. Select the vertical axis as the centerline; lines 2 and 12 become symmetric about vertical axis.

Evaluation Copy. Do not reproduce. For information visit www.cadcim.com

9. Similarly, make lines 1 and 7 symmetric about the horizontal axis. Next, choose the **Close** button from the **Make Symmetric** dialog box to close it. The sketch after applying constraints to all these entities is shown in Figure 3-25.

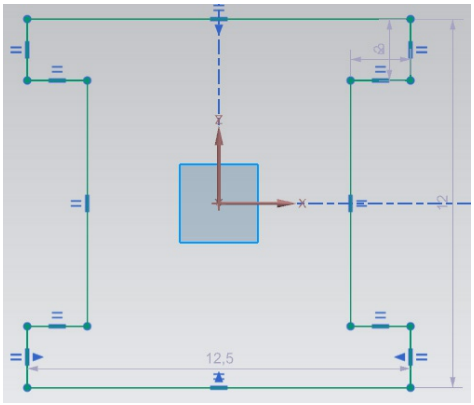

Figure 3-25 *The outer profile after adding constraints*

Adding Dimensions to Sketch Members

Next, you need to add dimensions to the sketch. As mentioned earlier, when you add dimensions to a sketch, the sketch gets modified accordingly.

1. Choose the **Rapid Dimension** tool from the **Dimension** group of the **Home** tab; you are prompted to select an object to dimension or the dimension to edit.

2. Select line 1; the current dimension of line 1 is attached to the cursor. Now, you need to place the dimension at the required location. Click below the line 1 to place the dimension, refer to Figure 3-26. As you place the dimension, an edit box is displayed. Enter **80** in the edit box and press Enter. Next, choose the **Fit** tool from the **Operation** group of the **View** tab.

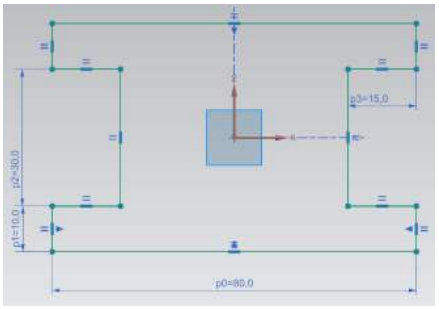

Figure 3-26 *The outer profile after adding required dimensions*

3. Select line 2 and place the dimensions on the left of the sketch. Enter **10** in the edit box displayed and press Enter.

4. Select line 4 and place the dimension on the left of the sketch. Next, modify the dimension value to **30** and press Enter.

5. Select line 9 and place the dimension below the line. Next, modify the dimension value to **15** and press Enter.

   When you place the dimensions, they generally scatter all around the sketch. It is a good practice to arrange them properly.

6. Exit the **Rapid Dimension** tool by pressing the Esc key and then drag the dimensions to place them properly around the sketch, refer to Figure 3-26.

Evaluation Copy. Do not reproduce. For information visit www.cadcim.com



Tip

Instead of adding dimensions to a sketch, you can also modify the existing dimension. To do so, double-click on the dimension; an edit box will be displayed. Enter the required value in the edit box and press Enter; the dimensions will be locked and displayed in black color.

Drawing the Inner Loop and Adding Dimensions

Next, you need to draw the rectangular profile inside the outer loop.

1. Choose the **Rectangle** tool from the **Curve** group of the **Home** tab; the **Rectangle** dialog box is displayed.

2. Choose the **From Center** button from the **Rectangle** dialog box; you are prompted to specify the center of the rectangle.

3. Select origin as the center of the rectangle; you are prompted to specify the second point of the rectangle.

4. Move the cursor horizontally toward right and click to specify the second point; you are prompted to select the third point to create the rectangle.

5. Move the cursor vertically upward and click to specify the third point; the rectangle is created, refer to Figure 3-27. Press Esc to exit the tool.

6. Double-click on the horizontal dimension of the rectangle; a dynamic edit box is displayed. Modify the value of the dimension to **30** and press Enter. Next, drag and place the dimension above the sketch.

7. Similarly, double-click on the vertical dimension of the rectangle and modify the value of the dimension to **20**. Next, press Esc. Next, place the dimension on the left of the sketch, refer to Figure 3-28.

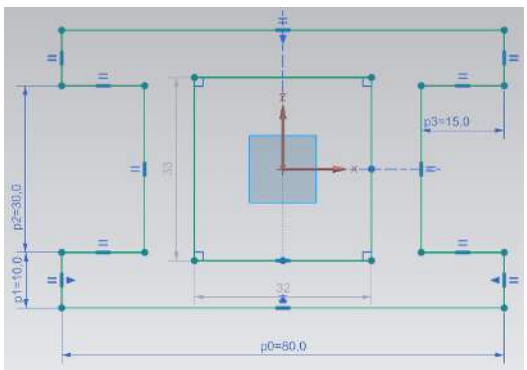

Figure 3-27 *The sketch after drawing the inner loop and turning on the display of constraints*

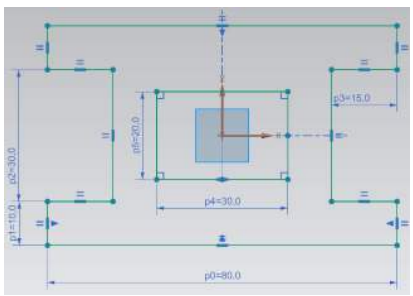

Figure 3-28 *The sketch after adding required dimensions and constraints*

Evaluation Copy. Do not reproduce. For information visit www.cadcim.com

Saving and Closing the File

1. Exit the sketching environment by choosing the **Finish** tool from the **Sketch** group of the **Home** tab. Next, choose the **Save** button from the **Quick Access** toolbar to save the sketch. Note that the name and location of the document had already been specified when you started new file.

2. Choose **Menu > File > Close > All Parts** from the **Top Border Bar** to close the file.

Tutorial 2

In this tutorial, you will create the profile for the model shown in Figure 3-29. The profile is shown in Figure 3-30. You will use the geometric and dimensional constraints to complete this sketch. **(Expected time: 30 min)**

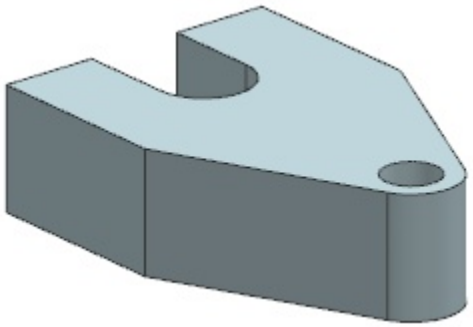

Figure 3-29 *Model for Tutorial 2*

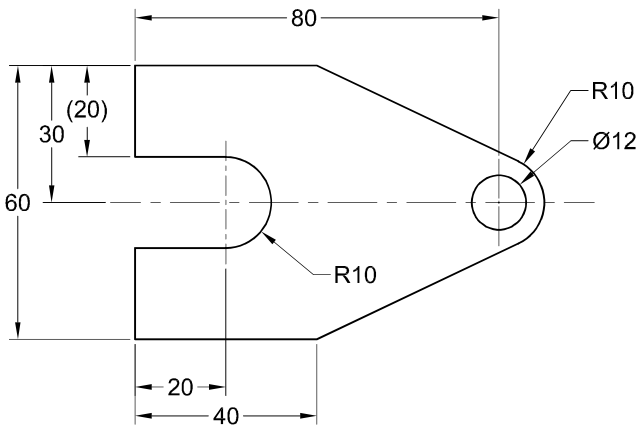

Figure 3-30 *Sketch for Tutorial 2*

Evaluation Copy. Do not reproduce. For information visit www.cadcim.com

The following steps are required to complete this tutorial:

a. Start a new file in NX and invoke the sketching environment.
b. Draw the sketch using the **Profile** tool.
c. Add the geometric and dimensional constraints to the sketch.
d. Save the sketch and close the file.

Starting a New File in NX and Invoking the Sketch Environment

1. Start a new file with the name *c03tut2.prt* using the **Model** template and specify its location as *C:\NX\c03*.

2. Turn on the display of WCS by choosing the **Display WCS** tool from **Tools > Utilities > More Gallery > WCS Gallery** in the **Ribbon** if not already displayed.

3. Invoke the Sketch environment by using the XC-YC plane as the sketching plane.

Drawing the Sketch

1. Choose the **Profile** tool from the **Curve** group. Draw the outer profile of the sketch, refer to Figure 3-43. You can draw the first line with exact dimension and then draw the remaining sketched entities with dimension values close to the required dimension values. Note that the start point of line1 is at the origin.

   Note that after drawing the first line, you may need to modify the drawing display area by using the **Fit** tool from the **Operation** group of the **View** tab.

2. Next, choose the **Circle** tool from the **Curve** group. Move the cursor over the arc that is numbered 3 in Figure 3-43; the center point of the arc is highlighted.



Note

*If the center of the arc is not highlighted, choose the **Arc Center** button from the **Selection Group** of the **Top Border Bar**.*

3. Once the center point gets highlighted, move the cursor over it and press the left mouse button to specify the center point of the circle. Now, move the cursor away from the center point and specify the diameter of the circle by clicking the left mouse button or by entering the diameter value in the diameter input box. The circle is created, refer to Figure 3-31.

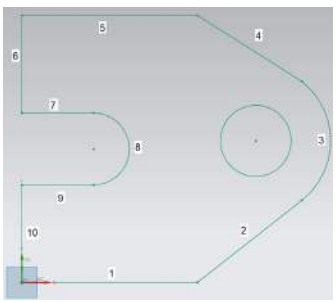

Figure 3-31 *The sequence to be followed for drawing the sketch*

Adding Constraints to the Sketch

1. Choose the **Make Horizontal** button from the **Sketch Scene Bar;** the **Make Horizontal** Dialog box is displayed**.** Select line 1 to apply the Horizontal constraint if this constraint has not already been applied. Similarly, apply the Horizontal constraint to lines 5, 7, and 9.

2. Similarly, apply the Vertical constraint to lines 6 and 10 if this constraint has not already been applied.

Evaluation Copy. Do not reproduce. For information visit www.cadcim.com

3. Choose the **Make Coincident** button from the **Sketch Scene Bar** option and the **Make co-incident** dialog box is displayed. Next, select the center point of the circle and center point of arc 3 from the drawing area to apply the **Make Coincident** constraint.

4. Choose the **Make Equal** option from **Sketch Scene Bar;** the **Make Equal** dialog box is displayed. Select the **Make Equal length** radio button from the dialog box and then select lines 1 and 5 to apply the Equal Length constraint.

5. Similarly, apply the **Make Equal** constraint between lines 2 and 4, 6 and 10, and 7 and 9.

6. Choose the **Make Tangent** option from **Sketch Scene Bar;** the **Make Tangent** dialog box is displayed. Select Line 4 and arc 3, and Line 2 and arc 3 to apply the Tangent constraint between them if not already applied.

The sketch after applying all the constraints is shown in Figure 3-32.

Modifying Dimensions of the Sketch

Next, you need to modify the dimensions of the sketch.

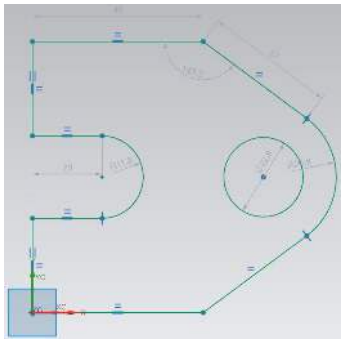

Figure 3-32 *The sketch displayed after adding the required constraints*

1. Double-click on the dimension of line 7; a dynamic edit box is displayed. Modify the value of the dimension to **20** and press Enter. Next, drag and place the dimension below the line, refer to Figure 3-33.

2. Double-click on the dimension of the arc 8; a dynamic edit box is displayed. Modify the value of the dimension to **10** and press Enter.

3. Double-click on the dimension of the arc 3; a dynamic edit box is displayed. Modify the value of the dimension to **10** and press Enter.

Next, you need to add some dimensions which are not added automatically.

4. Choose the **Rapid Dimension** tool from the **Dimension** group.



5. Select line 6 and the center point of the circle. Place the dimension above the sketch and modify the dimension value to **80**. Press the Enter key.

6. Select line 6 and place the dimension on the left of the sketch. Next, modify the dimension value to **20** and press Enter.

7. Select the circle and place the dimension,refer to Figure 3-33. Next, modify the dimension value to 12 and press Enter. Make sure that the dimension value assigned to Line 1 is 40.

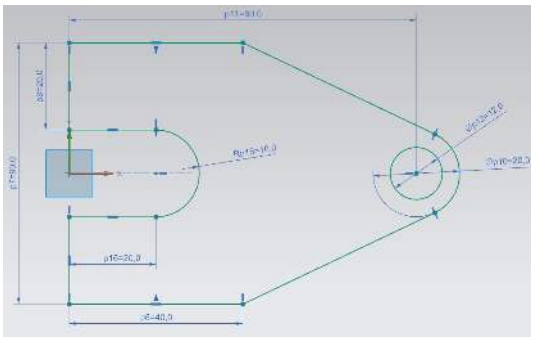

Figure 3-33 *The final sketch after adding the required dimensions*

Evaluation Copy. Do not reproduce. For information visit www.cadcim.com

8. Choose the **Fit** tool from the **View** tab.

The final sketch after adding the required dimensions is shown in Figure 3-33.

Saving and Closing the File

1. Choose the **Save** button from the **Quick Access** toolbar to save the sketch. Note that the name and the location of the document has already been specified when you started the new file.

2. Exit the sketching environment and then choose **Menu > File > Close > All Parts** from the **Top Border Bar** to close the file.

Tutorial 3

In this tutorial, you will create the profile of the revolved model shown in Figure 3-34. The profile is shown in Figure 3-35. You will use the geometric and dimensional constraints to complete this sketch. **(Expected time: 30 min)**



Figure 3-34 *Model for Tutorial 3*

Evaluation Copy. Do not reproduce. For information visit www.cadcim.com

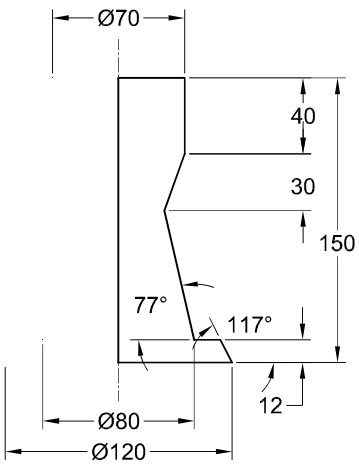

Figure 3-35 *Sketch for Tutorial 3*

The following steps are required to complete this tutorial:

a. Start a new file in NX and invoke the sketching environment.
b. Draw the required profile of the sketch using the **Profile** tool.
c. Add the geometric and dimensional constraints to the sketch.
d. Save the sketch and close the file.

Starting a New File in NX and Invoking the Sketch Environment

1. Start a new file with the name *c03tut3.prt* using the **Model** template and specify its location as *C:\NX\c03*.

   If required turn on the display of WCS by choosing the **Display WCS** tool from the **Tools > Utilities > More Gallery > WCS Gallery** in the **Ribbon**.

2. Invoke the Sketch environment using the XC-ZC plane as the sketching plane.

Drawing the Sketch

It is recommended that you create the first sketch member of exact measurement by entering the value in the edit box displayed. After creating the first sketch member, you can create rest of the sketch members by taking the first entity as the reference. After creating the entire sketch, you can modify the values by using the dimensioning tools.

1. Choose the **Profile** tool from the **Curve** group; you are prompted to specify the first point of the line. Specify the start point of the line at the origin. Next, move the cursor horizontally toward the right and enter **60** in the **Length** edit box and **0** in the **Angle** edit box. Next, press Enter.

2. Follow the sequence given in Figure 3-36 for drawing the sketch. Draw the rest of the entities of the sketch. For better understanding, the sketch has been numbered and temporary dimensions have been hidden.

Evaluation Copy. Do not reproduce. For information visit www.cadcim.com

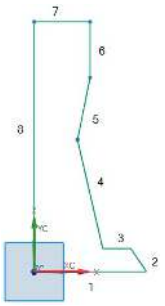

Figure 3-36 *The sequence for drawing the profile*

Adding Geometric Constraints to the Sketch

After completing the sketch, you need to apply constraints to it.

1. Choose the **Make Vertical** button from **Sketch Scene Bar**, **Make Vertical** dialog box will be displayed select line 8 as the object and click on the **OK** button; vertical constraint will be applied.

2. Similarly, apply the horizontal constraint to lines 1, 3, and 7 if this constraint is not applied automatically.

3. Apply the vertical constraint to line 6 if not applied automatically.

Modifying Dimensions of the Sketch

Next, you need to modify the dimensions of the sketch.

1. Double-click on the dimension of line 6; a dynamic edit box is displayed. Modify the value of the dimension to **40** and press Enter. Next, drag and place the dimension on the right of the sketch, refer to Figure 3-37.

   Next, you need to add some dimensions which are not added automatically.

2. Choose the **Rapid Dimension** tool from the **Dimension** group; the **Rapid Dimension** dialog box is displayed. 

3. Select line 8 and then place the dimension on the left of thesketch; an edit box with default value is displayed. Enter **150** in this edit box and press the Enter key; the dimension value is modified, refer to Figure 3-37.

Evaluation Copy. Do not reproduce. For information visit www.cadcim.com

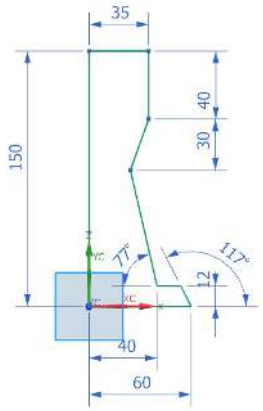

Figure 3-37 *The completed sketch displayed after adding required constraints and dimensions*

4. Select line 5 and then place the dimension on the right of the sketch. Next, modify the dimension value to **30** and press the Enter key, refer to Figure 3-37.

5. Select line 7 and place the dimension above the sketch. Next, modify the dimension value to **35** and press Enter, refer to Figure 3-37.

6. Select line 2 and then line 1; an angular dimension gets attached to the cursor. Move the cursor outside the sketch towards right and click the left mouse button to place the dimension. Next, modify the dimension value to **117** and press Enter, refer to Figure 3-37.

7. Select lines 3 and 4; an angular dimension is attached to the cursor. Move the cursor inside the sketch and place the dimension. Next, modify the dimension value to **77** and press Enter, refer to Figure 3-37.

8. Select the lower endpoint of line 4 and then select line 8; the dimension value is attached to the cursor. Place the dimension value below the sketch and then modify this value to **40**. Next, press Enter.

9. Select line 2 and place the dimension on the right of the line. Next, modify the dimension value to **12** and press Enter, refer to Figure 3-37. Press the Esc key.

10. Choose the **Fit** tool from the **Operation** group of the **View** tab. The resulting sketch after adding all the dimensions is shown in Figure 3-37.

Saving and Closing the File

1. Choose the **Save** button from the **Quick Access** toolbar to save the sketch. Note that the name and location of the document has already been specified when you started the new file.

2. Exit the sketching environment by choosing the **Finish** tool from the **Sketch** group of the **Home** tab and choose **Menu > File > Close > All Parts** from the **Top Border Bar** to close the file.

Evaluation Copy. Do not reproduce. For information visit www.cadcim.com

Self-Evaluation Test

Answer the following questions and then compare them to those given at the end of this chapter:

1. The _____ constraint is used to force two points to share same co-ordinates.

2. The _____ tool is used to dimension the radius of an arc.

3. In NX, you can add all types of geometric constraints by choosing the **Sketch Scene Bar** option from the workspace. (T/F)

4. The **Rapid Dimension** tool in the **Dimension** group is used to add all possible dimension types. (T/F)

5. In NX, the **Radial Dimension** tool is used to add the diameter dimension to the sketch members. (T/F)

Review Questions

Answer the following questions:

1. Which of the following tools is used to apply geometric constraints to a sketch?

   (a) **Geometric Constraints** (b) **Sketch Scene Bar**
   (c) **Rapid Dimensions** (d) None of these

2. Which of the following tools is used to add a radial dimension to a sketch?

   (a) **Radial** (b) **Sketch Scene Bar**
   (c) **Rapid Dimension** (d) None of these

3. Which of the following tools is used to make the endpoints of selected objects coincident?

   (a) **Coincident** (b) **Vertical**
   (c) **Horizontal** (d) None of these

4. Which of the following tools is used to apply the constant length constraint between sketch members?

   (a) **Equal Length** (b) **Horizontal**
   (c) **Vertical** (d) None of these

5. Which of the following tools is used to apply an angular dimension to a sketch member?

   (a) **Angular** (b) **Constant Length**
   (c) **Rapid Dimensions** (d) None of these

Evaluation Copy. Do not reproduce. For information visit www.cadcim.com

6. Which of the following tools is used to convert a sketch member into a reference element?

(a) **Convert To/From Reference** (b) **Sketch Scene Bar**
(c) **Geometric Constraints** (d) None of these

7. In NX, the degree of freedom arrows are displayed on the points that are free to move. (T/F)

8. The **Construction** group contains all the tools required to draw a sketch. (T/F)

9. The **Sketch** tool in the **Home** tab is chosen to switch to the sketching environment. (T/F)

10. The **Finish** tool in the **Home** tab is used to exit the Sketch environment. (T/F)

EXERCISES

Exercise 1

Draw the base sketch of the model shown in Figure 3-38. The sketch to be drawn is shown in Figure 3-39. Use the geometric and dimensional constraints to complete this sketch.

(Expected time: 15 min)

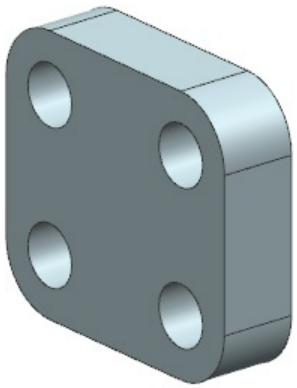

Figure 3-38 *Model for Exercise 1*

Evaluation Copy. Do not reproduce. For information visit www.cadcim.com

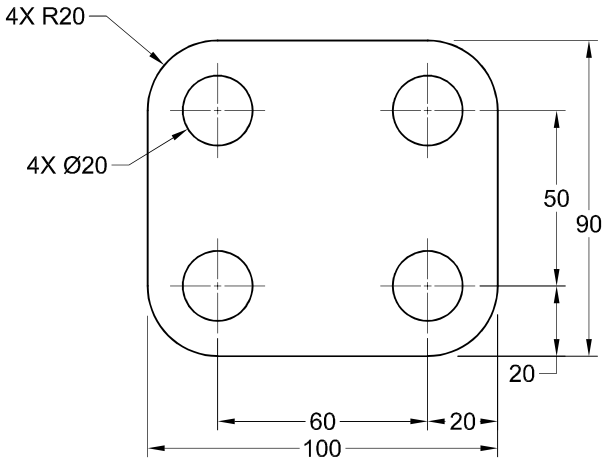

Figure 3-39 *Sketch for Exercise 1*

Exercise 2

Draw the base sketch of the model shown in Figure 3-40. The sketch to be drawn is shown in Figure 3-41. Use the geometric and dimensional constraints to complete this sketch.

(Expected time: 15 min)

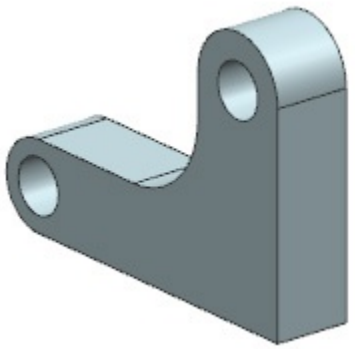

Figure 3-40 *Model for Exercise 2*

Evaluation Copy. Do not reproduce. For information visit www.cadcim.com

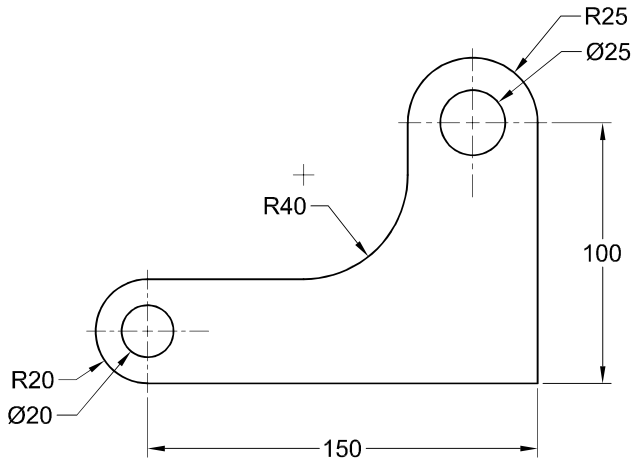

Figure 3-41 *Sketch for Exercise 2*

Evaluation Copy. Do not reproduce. For information visit www.cadcim.com

Answers to Self-Evaluation Test

1. Coincident, **2. Radial**, **3.** T, **4.** T, **5.** T

Evaluation Copy. Do not reproduce. For information visit www.cadcim.com