Chapter 2

Creating Sketches, Dimensions, Base Features and Drawings

Learning Objectives

After completing this chapter, you will be able to:

- *Start NX and create a new file in it*
- *Invoke different NX environments*
- *Understand the need of datum planes*
- *Create three fixed datum planes*
- *Create sketches in the Modeling environment*
- *Create sketches in the Sketch in Task Environment*
- *Use various drawing display tools*
- *Understand different selection filters*
- *Select and deselect objects*
- *Use various sketching tools*
- *Use different snap point options*
- *Delete sketched entities*
- *Exit the sketching environment*

INTRODUCTION

Most designs created in NX consist of sketch-based and placed features. A sketch is a combination of two-dimensional (2D) entities such as lines, arcs, circles, and so on. The features such as extrude, revolve, and sweep created by using 2D sketches are known as sketch-based features. The features such as fillet, chamfer, thread, and shell created without using a sketch are known as placed features. In a design, the base feature or the first feature is always a sketch-based feature. For example, the sketch shown in Figure 2-1 is used to create the solid model shown in Figure 2-2. In this model, the fillets and the chamfers are the placed features.

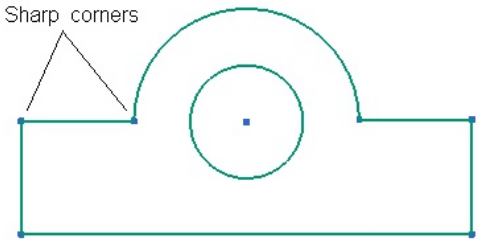

Figure 2-1 *Profile for the sketch-based feature of the solid model shown in Figure 2-2*

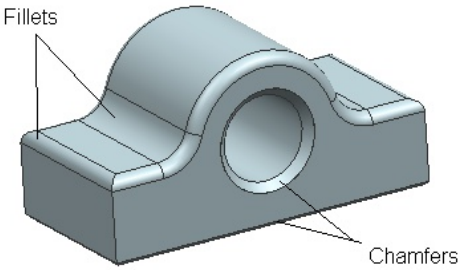

Figure 2-2 *Solid model created using the sketch-based and placed features*

As mentioned earlier, to create sketch-based features, you first need to create its sketch. In NX, you can create a sketch by using two methods: Direct sketch and Sketch in Task Environment.

In the Direct sketch method, you can create sketch, as required, directly in the Modeling environment by using the sketching tools such as **Line**, **Arc/Circle**, and **Point** from the **Base** group of the **Curve** tab of the **Ribbon**. Once the sketch has been drawn, you can directly use the solid modeling tools to convert the sketch into a sketch-based feature.

In the Sketch in Task Environment method, to create the sketch, you need to invoke the sketching environment by using the **Sketch** tool from the **Home** tab of the **Ribbon**. You will learn more about creating sketches by using these methods later in this chapter.

Unlike other solid modeling software packages where you need separate files for starting different environments, NX uses only a single type of file to start different environments. In NX, files are saved in the *.prt* format and all the environments required to complete a design can be invoked in the same *.prt* file. For example, you can draw sketches and convert them into features, assemble other parts with the current part, and generate drawing views in a single *.prt* file.

STARTING NX

You can start NX by double-clicking on its shortcut icon on the desktop of your computer. The default initial interface of NX is shown in Figure 2-3 and it displays basic information about NX. You can view more information by clicking on the buttons available in the **Resource Bar** which is displayed on the left of the NX screen, refer to Figure 2-3.

Evaluation Copy. Do not reproduce. For information visit www.cadcim.com

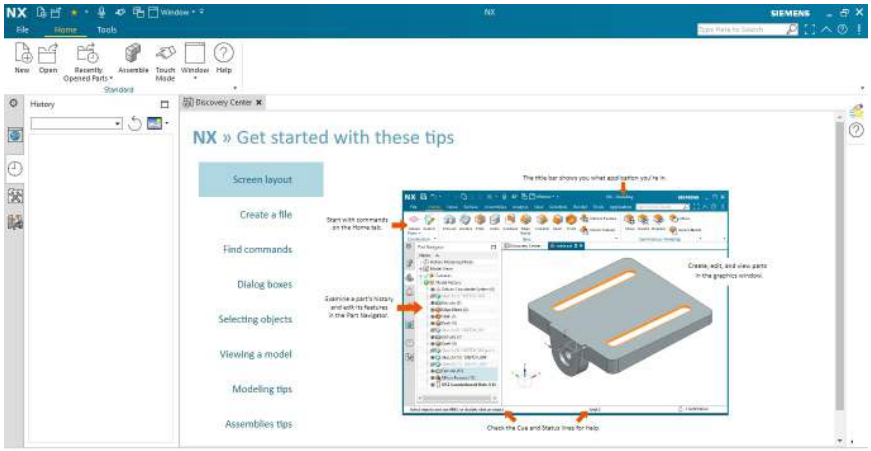

Figure 2-3 *The default initial interface of NX*

STARTING A NEW DOCUMENT IN NX

Ribbon:	Home > Standard > New
Menu:	File > New



To start a new file, choose the **New** tool from the **Standard** group of the **Home** tab in the **Ribbon** or choose **Menu > File > New** available at the left on the **Top Border Bar**; the **New** dialog box will be displayed, as shown in Figure 2-4.

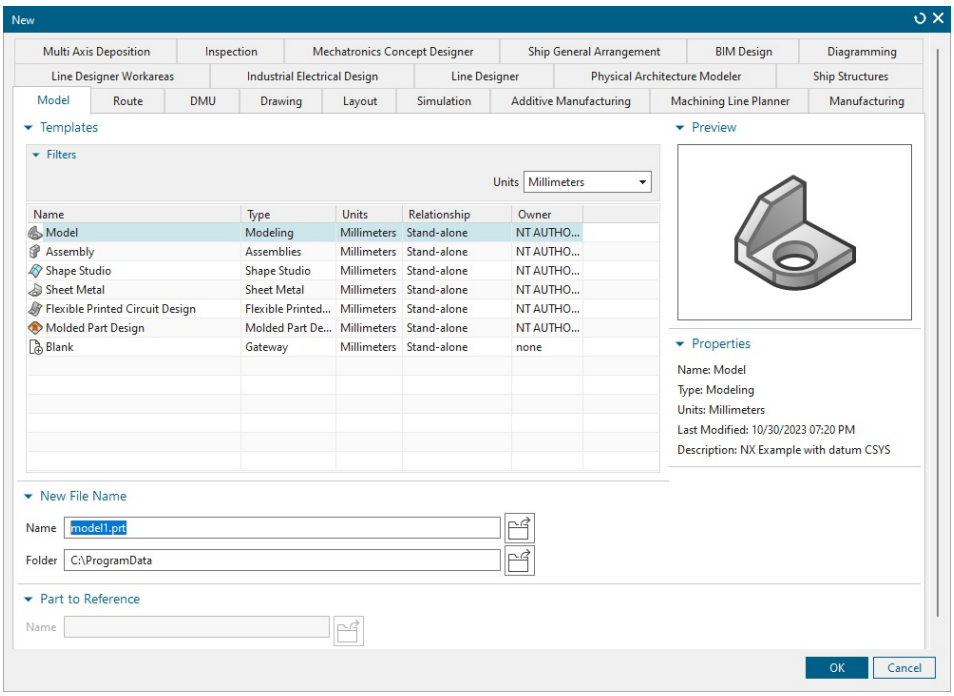

Figure 2-4 *The* ***New*** *dialog box*

Evaluation Copy. Do not reproduce. For information visit www.cadcim.com



Note

*The **Top Border Bar** is not displayed by default in the initial screen of the new part file. To make it visible, right-click in the **Ribbon** area; a shortcut menu will be displayed. Next, select the **Top Border Bar** option from it.*

In the **New** dialog box, the **Model** tab is chosen by default. The tabs and options in this dialog box are discussed next.

Templates Rollout

In the **New** dialog box, templates are grouped together under various environment types such as **Model**, **Drawing**, **Manufacturing**, **Inspection**, **Machining Line Planner**, **Additive Manufacturing**, **Multi Axis Deposition**, **Line Designer Workareas**, and **Line Designer**. The template files related to these environments are available in their respective tabs. These files are used whenever you start a new file. These template files provide a predefined set of tools with specified environment. This saves a lot of time in setting environment and displaying tools according to your requirements.

Model Tab

By default, this tab will be chosen and the modeling templates will be displayed in the **Templates** rollout. Some of the important modeling templates are discussed next.

Model

By default, the **Model** template is selected and it is used to start a new part file in the Modeling environment for creating solid and surface models.

Assembly

The **Assembly** template is used to start a new assembly file in the Assembly environment for assembling various parts of the assembly.

Shape Studio

The **Shape Studio** template is used to start a new part file in the Shape Studio environment for creating advanced surface models.

Sheet Metal

The **Sheet Metal** template is used to start a new file in the Sheet Metal environment for creating sheet metal models.

Blank

This template is used to start a new file in the Gateway environment. The Gateway environment allows you to examine the geometry and drawing views created. You cannot modify a model in the Gateway environment. However, you can invoke any environment of NX from it.

Route Tab

This tab contains routing templates and theses templates are displayed in the **Templates** rollout. Some of the important routing templates are discusssed next.

Evaluation Copy. Do not reproduce. For information visit www.cadcim.com

Mechanical Routed System Designers

This template contains tools capable of supporting different types of routing designs, for example, piping, tubing, and HVAC.

Routing Mechanical

This template contains mechanical routed system design tools for tubing, piping, conduit, and raceways. Mechanical routed system models are fully associative to NX assemblies which, in turn, facilitate design changes.

Routing Electrical

This template contains tools which offer a flexible interface to logical connectivity data, and rapid path creation between components.

Drawing Tab

This tab is used to specify a template for a drawing. These templates are contained in the **Templates** rollout and are used to start a new drawing file in the Drafting environment for generating the drawing views. These templates are arranged according to the sheet size (A0, A1, A2, A3, and A4) in the **Drawing** tab.

Units

This drop-down list is available in the **Filters** sub-rollout of the **Templates** rollout and is used to filter the templates as per the unit. The options in this drop-down list are discussed next.

Millimeters

If you select the **Millimeters** option, the templates only with the millimeters unit will be displayed in the **Templates** rollout.

Inches

If you select the **Inches** option, the templates only with the inches units will be displayed in the **Templates** rollout.

All

Select the **All** option to display all the templates (with both millimeters and inches units).

New File Name Rollout

This rollout is used to specify the name and location to save the file. The options in this rollout are discussed next.

Name

Enter the name of the new file in the **Name** text box. Alternatively, choose the button on the right side of the **Name** text box; the **Choose New File Name** dialog box will be displayed. Type the name in the **File name** edit box. Also, to specify the location to save the new file, browse the folder where you need to save the file and choose the **OK** button. However, there is a separate option to specify the location, which is discussed next.

Evaluation Copy. Do not reproduce. For information visit www.cadcim.com

Folder

Specify the location to save the new file in the **Folder** text box. Alternatively, choose the button on the right side of the **Folder** text box; the **Choose Directory** dialog box will be displayed. Next, browse the folder where you want to save the file and choose the **OK** button.



Note

1. It is recommended that you create a folder with the name NX in the primary drive of your computer and then create individual folder for each chapter within the NX folder. Now, you can save the part files of all the chapters in their respective folders. This will ensure a better organization of the part files created.

*2. In this textbook, the **Model** template has been used for starting a new file for illustration purpose.*

After specifying all the required options in the **New** dialog box, choose the **OK** button; the new file will open in the specified environment. Figure 2-5 shows the initial screen of the new file invoked by using the **Model** template.

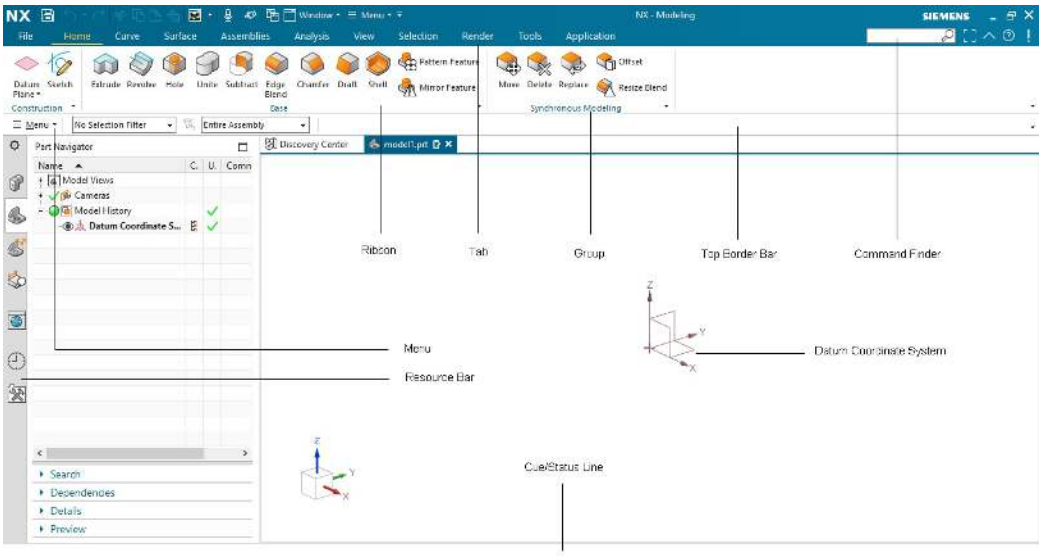

Figure 2-5 *Initial screen of the new part file*



Tip

*To change the color of curves and dimensions, choose **Menu > Preferences > Sketch** from the **Top Border Bar**; the **Sketch Preferences** dialog box will be displayed. Next, choose the **Part Settings** tab if not already chosen to change the color of curves and dimensions.*

INVOKING DIFFERENT NX ENVIRONMENTS

You can invoke different environments of NX by selecting their respective templates from the **New** dialog box. In NX, you can also switch from one environment to another. To do so, choose the **File** tab from the **Ribbon**; a menu will be displayed, refer to Figure 2-6. Next, hover

Evaluation Copy. Do not reproduce. For information visit www.cadcim.com

the cursor over the **All Applications** option from the **Start** area of the menu; a flyout will be displayed. Now, you can invoke the desired environment by selecting the required option from the flyout displayed.

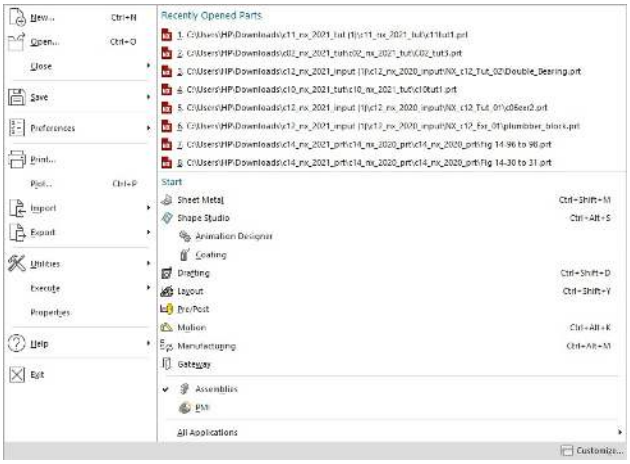

Figure 2-6 *Menu showing different environments of NX*

CREATING THREE FIXED DATUM PLANES (XC-YC, YC-ZC, XC-ZC)

Ribbon:	Home > Construction > Datum Drop-down > Datum Plane
Menu:	Insert > Datum > Datum Plane

In NX, you can create the sketch of the base feature by selecting a reference plane of the datum coordinate system as a sketching plane. Also, you can create three fixed datum planes (YC-ZC, XC-ZC, and XC-YC) and then use one of them as the sketching plane for creating the sketch of the base feature. To create three fixed datum planes, choose **Menu > Insert > Datum > Datum Plane** available at the left on the **Top Border Bar**. Alternatively, choose the **Datum Plane** tool from the **Construction** group of the **Ribbon**; the **Datum Plane** dialog box will be displayed, as shown in Figure 2-7. Next, select the **YC-ZC Plane** option from the Type drop-down list; a preview of the plane will be displayed in the drawing window. Choose the **Apply** button; the YC-ZC plane will be created. Similarly, select the **XC-ZC Plane** and **XC-YC Plane** options from the Type drop-down list to create the XC-ZC and XC-YC planes, respectively and then choose the **OK** button to exit the dialog box. Figure 2-8 shows the three fixed datum planes created.

Evaluation Copy. Do not reproduce. For information visit www.cadcim.com

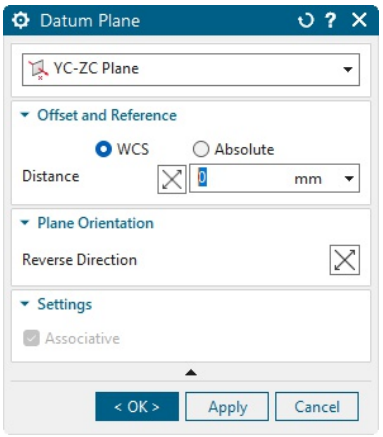

Figure 2-7 *The* ***Datum Plane*** *dialog box*

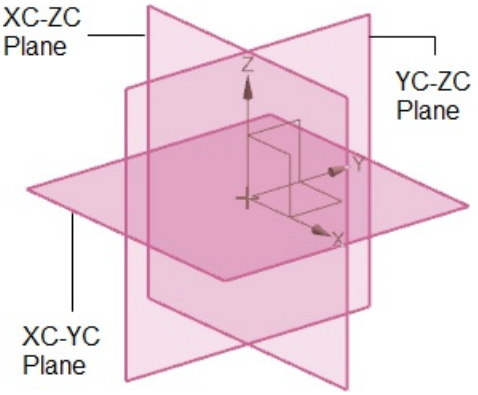

Figure 2-8 *Three fixed datum planes*



Tip

By default, all the tools are not available in their respective groups. Therefore, you may need to customize the groups to add those tools that are not available by default. To customize a group, click on the down arrow at the bottom right corner of the group; a drop-down with a list of tools/options will be displayed. Click on the tool to be added or removed from the group. Note that a tick mark available on left of a tool name indicates that it is already added in the group.

Similarly, you can add or remove the groups from the ***Ribbon*** *by using the* ***Ribbon Options*** *arrow available at the bottom right corner of the* ***Ribbon.***

DISPLAYING THE WCS (WORK COORDINATE SYSTEM)

Ribbon: Tools > Utilities > More Gallery > WCS Gallery > Display WCS *(Customize to Add)*



The display of WCS (Work Coordinate System) is important in selecting the planes for drawing sketches. When you start a new file, by default, the display of WCS is turned off. It is recommended to keep the display of WCS turned on while drawing sketches and creating features.

If the display of WCS is turned off, then to turn it on, choose the **Display WCS** button from the **WCS** gallery of the **More** gallery in the **Utilities** group of the **Tools** tab in the **Ribbon**; the WCS will be displayed at the origin of the drawing window. Note that the **Display WCS** button is a toggle button and is used to toggle the display of WCS on/off. Figure 2-9 shows the WCS with the datum coordinate system hidden for better visualization.



Figure 2-9 *The WCS (Work Coordinate System)*

Evaluation Copy. Do not reproduce. For information visit www.cadcim.com

CREATING SKETCHES



In NX, you can create the sketch of a feature by two methods. In the first method, you need to invoke the sketching environment by choosing the **Sketch** tool from the **Construction** group of the **Home** tab of the **Ribbon**. In the second method, you can create a sketch in the Modeling environment directly by invoking the sketch tools available in the **Base** group of the **Curve** tab (Customize to Add). Both these methods are discussed next.

Creating Sketches in the Sketching Environment

Ribbon: Home > Construction > Sketch



As mentioned earlier, the base feature or the first feature in a design is always a sketch-based feature. The profiles of the sketch-based features are defined by using a sketch. Therefore, to create the base feature, first you need to create a sketch.

In NX, you can create a sketch by using the datum coordinate system plane (XC-YC, YC-ZC, or XC-ZC), any reference plane, or the existing face of the model.

To create a sketch in the sketching environment, choose the **Sketch** tool from the **Construction** group of the **Home** tab; the **Create Sketch** dialog box will be displayed, as shown in Figure 2-10. Also, you will be prompted to select a plane or face. The options in the various rollouts of the **Create Sketch** dialog box are discussed next.

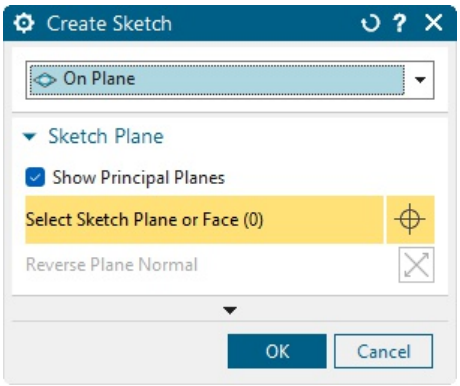

Figure 2-10 *The* ***Create Sketch*** *dialog box*

Type Drop-down List

The options in this drop-down list are used to specify whether you want to draw the sketch on the existing plane or on a temporary plane defined on the path.

On Plane

By default, this option is selected in the drop-down list. It is used to specify the existing plane, face, or datum coordinate system plane as the sketching plane.

Evaluation Copy. Do not reproduce. For information visit www.cadcim.com

On Path

Select this option from the drop-down list to specify the sketch plane on the existing path. The temporary sketch plane will be created perpendicular to the path selected as the **Normal to Path** option is selected by default in the **Orientation** drop-down list of the **Plane Orientation** rollout.

Depending upon the option selected from the drop-down list, the **Create Sketch** dialog box will be modified. The various rollouts in the modified dialog box for both the options are discussed next.

On Plane Options

By default, the rollouts related to the **On Plane** option will be displayed in the **Create Sketch** dialog box, refer to Figure 2-10. These rollouts are discussed next.

Sketch Plane Rollout

The options in this rollout are used to specify the sketch plane. The options in this rollout are as follows:

Show Principal Planes: This check box allows you to toggle on/off the display of three principal planes.

Select Sketch Plane or face: The button in this area allows you to specify the plane for the sketch. You can move the cursor over the face or plane until the preview is at the location where you want to define the origin of the sketch, then select the plane or face.

Reverse Plane Normal: This button allows you to flip the direction of the Z CYS axis.

Orientation Rollout

The options in this rollout are used to specify horizontal or vertical reference for the sketch. The sketch plane gets orientated according to the specified references. The options in this rollout are as follows:

Select Horizontal Reference: The button in this area allows you to specify the horizontal reference for the sketch. Select a face, edge, datum axis, or datum plane. When you select an edge, NX points the reference axis toward the closest end point.

Reverse Horizontal Direction: This button allows you to flip the reference direction. You can also reverse direction by double-clicking the arrow head displayed in the graphics window.

Specify Origin Point: This options in this area are used to select the origin point of the sketch plane. You can select a point on the sketch plane to specify it as the origin of the sketch. You can also use the **Point Dialog** button or the **Inferred Point** drop-down list available in the **Specify Origin Point** area to create or locate a point.



Note

When you create a sketch on a face, NX makes the curve nearest to your current view the horizontal axis. Adjust your view before selecting to set the axis you want.

Evaluation Copy. Do not reproduce. For information visit www.cadcim.com

On Path Options

Select this option from the Sketch Type drop-down list to create a sketching plane on the selected path; the rollouts related to the **On Path** option will be displayed in the **Create Sketch** dialog box, as shown in Figure 2-11. The options in these rollouts are discussed next.

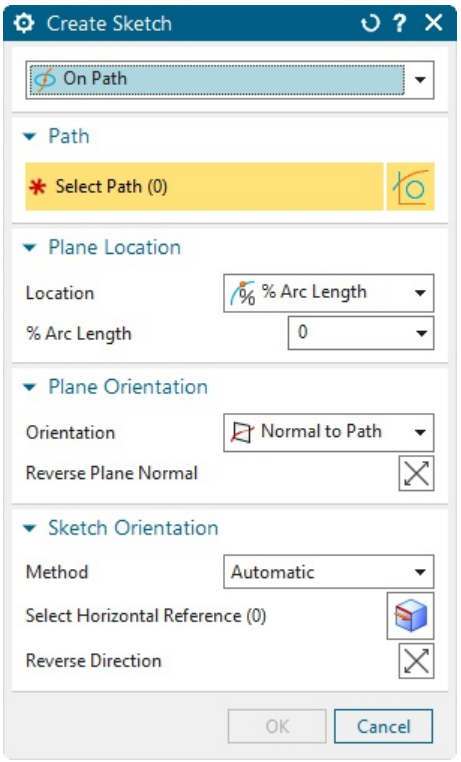

Figure 2-11 *Rollouts displayed when the* ***On Path*** *option is selected*

Path Rollout



The **Curve** button in this rollout is used to select the path. The path may be a curve or an edge of an existing solid body.

Plane Location Rollout

The options in this rollout are used to specify the location of the sketch plane along the path in terms of arc length or point. These options are discussed next.

Location

This drop-down list contains different options to specify the location of the sketch plane along the path. These options are as follows:

Arc Length: This option allows you to specify the sketch plane distance from the start point of the path. Enter the distance in the **Arc Length** edit box.



Note

The nearest endpoint of the selected path will be considered as the start point of the path.

% Arc Length: This option allows you to specify the distance of the sketch plane in terms of the percentage of arc length from the start point of path. Enter the % value in the **% Arc Length** edit box.

Through Point: This option allows you to specify the sketch plane by picking a point on the path. You can use the **Point Dialog** button or **Inferred Point** drop-down list to create or locate a point.

Plane Orientation Rollout

The options in this rollout are used to specify the direction of the sketch plane with respect to the selected path. These options are discussed next.

Orientation

This drop-down list contains different options to specify the direction of the sketch plane. These options are discussed next.

Normal to Path: This option allows you to orient the sketch plane normal to the selected path.

Evaluation Copy. Do not reproduce. For information visit www.cadcim.com

Normal to Vector: This option allows you to orient the sketch plane normal to the specified vector. You can use the **Vector Dialog** button or the **Inferred Vector** drop-down list to create or specify the vector.

Parallel to Vector: This option allows you to specify the sketch plane parallel to the specified vector. You can use the **Vector Dialog** button or the **Inferred Vector** drop-down list to create or specify the vector.

Through Axis: This option aligns the sketch plane so that it passes through the specified axis. Specify the axis using the **Vector Dialog** button or the **Inferred Vector** drop-down list.

Reverse Plane Normal

The **Reverse Plane Normal** button is used to reverse the direction of sketch plane.

Sketch Orientation Rollout

The options in the drop-down list of this rollout are used to specify the reference for a sketch. The sketching plane will be oriented according to the specified reference. The options in this rollout are discussed next.

Method

The options in this drop-down list are used to specify references for the orientation of a sketch. These options are discussed next.

Automatic: The **Automatic** option is selected by default in this drop-down list. As a result, the **Select Horizontal Reference** button available below this drop-down list gets activated. You can specify the horizontal reference by using this button. Specify the horizontal reference for the sketch; the sketching plane will be oriented based on the specified reference.

Note

*After selecting the **Automatic** option, if you select an existing curve as the path, the sketch will be oriented using the curve parameters and if you select an existing edge as the path, the sketch will be oriented relative to the face.*

Relative to Face: This option allows you to orient the sketch to a face which can be either inferred or explicitly selected. The path location you select determines the direction of the sketch plane.

Use Curve Parameters: This option allows you to orient the sketch using curve parameters, even if the path selected is an edge, or is part of a feature that lies on a face.

Reverse Direction

The **Reverse Direction** button in this rollout is used to reverse the direction of the specified reference.

All the options in the **Create Sketch** dialog box have already been discussed. For illustration purpose, select the **On Plane** option from the drop-down list. By default, the XC-YC plane will be selected. Next, choose the **OK** button from the **Create Sketch** dialog box; the selected reference plane will be oriented normal to the viewing direction and the sketching environment will be activated, refer to Figure 2-12. Now, you can create a sketch by using different sketching tools.

Evaluation Copy. Do not reproduce. For information visit www.cadcim.com

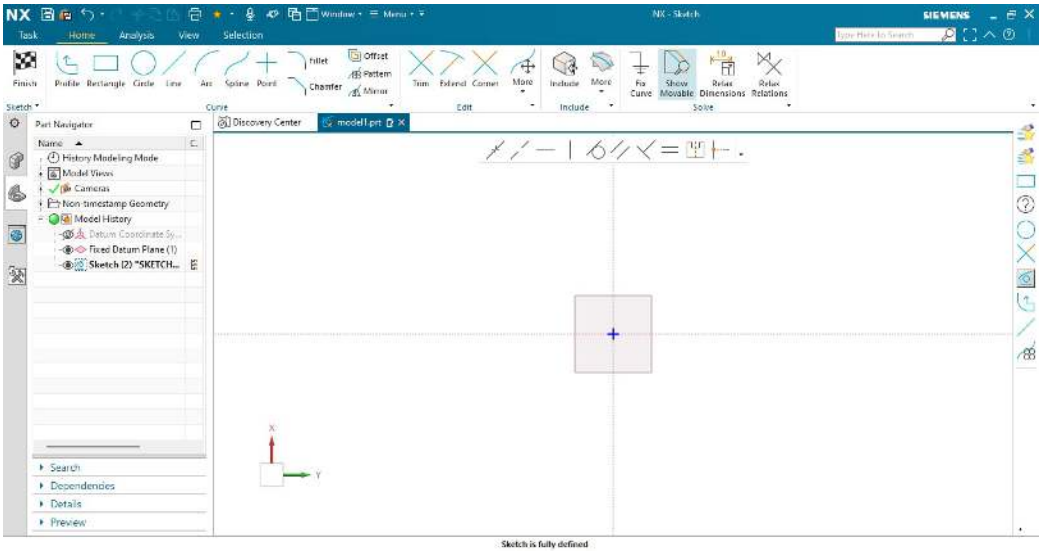

Figure 2-12 *The screen appears with XC-YC plane oriented normal to the viewing direction*

Tip

*If the icons of the **Ribbon** appear large, you can reduce their size. To do so, right-click on **Ribbon** to display a shortcut menu and then choose the **Customize** option; the **Customize** dialog box will be displayed. Choose the **Icons/Tooltips** tab and then select the options from the **Ribbon Bar** drop-down list available in the **Icon Sizes** area.*

Creating Sketches in the Modeling Environment

In NX, you can create a sketch directly in the Modeling environment. You can use the tools available in the **Base** group of the **Curve** tab of the **Ribbon** for creating a sketch directly in the Modeling environment. However, by default, in the Modeling environment, all the sketching tools are not available. To get full access of the sketching tools, follow the procedure of creating sketches in the sketching environment which is already discussed in the previous section.

SKETCHING TOOLS

As discussed earlier, the tools required to draw a sketch are available in the **Base** group of the **Curve** tab in the Modeling environment. Also, these tools are available in the **Curve** group of the **Home** tab in the sketching environment. The sketching tools in context of the **Curve** group in the **Home** tab of the sketching environment are discussed next.

Note

*In this textbook, all the sketching tools available in the **Curve** group of the **Home** tab are explained after invoking the sketching environment.*

Evaluation Copy. Do not reproduce. For information visit www.cadcim.com

Drawing Sketches Using the Profile Tool

Ribbon:	Home > Curve > Profile
Menu:	Insert > Curve > Profile

The **Profile** tool is the most commonly used tool to draw sketches in NX. This tool allows you to draw continuous lines and tangent/normal arcs. To draw continuous lines and tangent/normal arcs using this tool, choose the **Profile** tool from the **Curve** group of the **Home** tab; the **Profile** dialog box will be displayed, as shown in Figure 2-13.

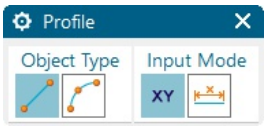

Figure 2-13 *The* ***Profile*** *dialog box*

Also, the dynamic input boxes are displayed below the cursor and you will be prompted to select the first point of the line or press and drag the left mouse button to begin the arc creation. The dynamic input boxes allow you to enter the coordinates or the length and angle of the line. The methods of creating lines and arcs using this tool are discussed next.

Drawing Lines

The option to draw straight lines is active by default when you invoke the **Profile** tool. This is because the **Line** button is chosen by default in the **Profile** dialog box. NX allows you to draw lines using two methods. These methods are discussed next.

Drawing Lines by Entering Values

In this method of drawing lines, you can enter the coordinate values or the length and angle of the line in the dynamic input boxes displayed below the cursor when you invoke the **Profile** tool. After you have entered the coordinates of the start point of the line, a rubber-band line will be displayed between the cursor and the specified point. Also, you will be prompted to select the second point of the line. On specifying the start point of the line, the mode of the dynamic input boxes will changed, refer to Figure 2-14.

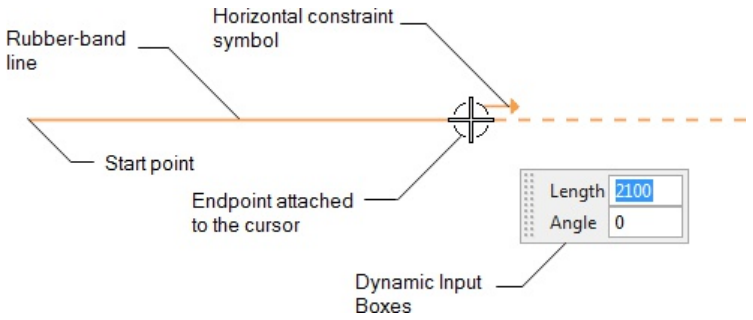

Figure 2-14 *Drawing a horizontal line*

This happens because the **Parameter Mode** button is automatically chosen in the **Profile** dialog box. As you move the cursor in the drawing window, the length and angle of the line gets modified, based on the relative position of the cursor with respect to the point specified earlier in the dynamic input boxes. You can draw a line by specifying its length and angle in these boxes.

Evaluation Copy. Do not reproduce. For information visit www.cadcim.com



Note

*After specifying the start point of the line if you choose the **Coordinate Mode** button from the **Profile** dialog box, the coordinate mode option for specifying the endpoint of the line will become active and you will be prompted to enter the X and Y coordinate values of the end point with respect to the current WCS origin.*

The line drawing process does not end after you specify the second point of the line. Instead, another rubber-band line starts with its start point at the endpoint of the last line and the endpoint attached to the cursor. You can repeat the above-mentioned process to draw a chain of continuous lines.



Tip

You can toggle between the two dynamic input boxes by pressing the Tab key. Note that once you specify a value in one of the boxes and press the Tab key, second dynamic input box will be activated. Specify the value in the second box and then press the Enter key or the Tab key to register the values and draw the line using these values.

Drawing Lines by Picking Points in the Drawing Window

This is the most convenient method of drawing lines and is extensively used in sketching. The parametric nature of NX ensures that irrespective of the length of the line that is drawn, you can modify it to the required values using dimensions. To draw lines using this method, invoke the **Profile** tool and pick a point in the drawing window; a rubber-band line appears. Specify the endpoint of the line by picking a point in the drawing window; another rubber-band line will appear with the start point as the endpoint of the last line and the endpoint attached to the cursor. You can continue specifying the endpoints of the lines to draw a chain of continuous lines.

While drawing a line, you will notice that some symbols are displayed along with the cursor. For example, after specifying the start point of the line, if you move the cursor in the horizontal direction, an arrow pointing toward the right will be displayed, refer to Figure 2-14. This arrow is the symbol of the **Horizontal** constraint that is applied to the line. This constraint will ensure that the line you draw is horizontal. These constraints are automatically applied to the sketch while drawing. You will learn more about the constraints in the later chapters.

Drawing Arcs

The option to draw arcs can be activated by choosing the **Arc** button in the **Profile** dialog box. Alternatively, you can press and hold the left mouse button and drag the cursor to invoke the arc mode. Generally, the arcs that are drawn by using this tool are in continuation with lines. Therefore, the start point of the arc is taken as the endpoint of the last line. As a result, when you invoke the arc mode, you need to specify only the endpoint of the arc.

When you draw an arc in continuation with lines, you will notice that a circle with four quadrants will be displayed at the start point of the arc, as shown in Figure 2-15. This symbol is called the quadrant symbol and it helps you to define whether you need to draw a tangent arc or a normal arc. This symbol also helps you in specifying the direction of the arc.

Evaluation Copy. Do not reproduce. For information visit www.cadcim.com

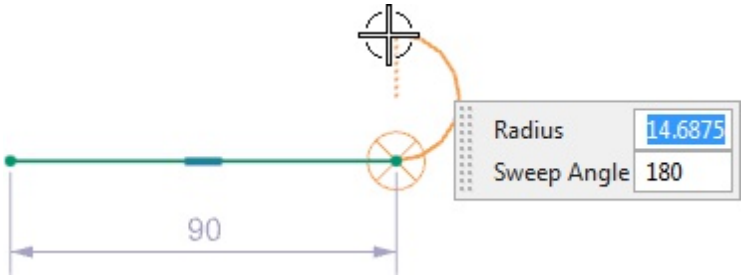

Figure 2-15 *Quadrant symbol displayed while drawing an arc using the* ***Profile*** *tool*

As evident from Figure 2-15, there are four quadrants in the quadrant symbol. The movement of the cursor in these quadrants will determine whether the arc will be tangent to the line or normal to the line. To draw a tangent arc, move the cursor to the start point of the arc and then move it in the quadrants along the line through a small distance; the tangent arc appears. Now, move the cursor to resize the arc, refer to Figure 2-15.

To draw a normal arc, move the cursor through a small distance in the quadrant normal to the line; a normal arc appears. Move the cursor to resize the arc, as shown in Figure 2-16. As you invoke the arc mode, the current dynamic input boxes change into the **Radius** and **Sweep Angle** input boxes. These boxes allow you to specify the radius and the sweep angle to draw the arc.

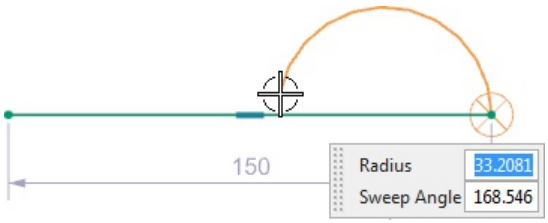

Figure 2-16 *Drawing the normal arc*

Tip

1. To restart drawing lines using the ***Profile*** *tool or to break the sequence of the continuous lines, press the Esc key once.*

2. Press the Esc key twice to exit the tool. Alternatively, right-click in the drawing area and choose the ***OK*** *option from the shortcut menu.*

Note

If you are not drawing the arc in continuation with a line or an arc, this tool will work similar to the ***Arc by 3 Points*** *tool which is discussed later in this chapter.*

Using Help Lines to Locate Points

You will notice that when a sketching tool is active while drawing sketches, some dotted lines are displayed from the keypoints of the existing entities. The keypoints include endpoints, midpoints, center points, and so on. These dotted lines are called the help lines. If the help lines are not displayed automatically, move the cursor to the keypoints and then move the cursor away; the help lines will be displayed. The help lines are used to locate the points with reference to the keypoints of the existing entities. Figure 2-17 shows the use of the help lines to locate the start point of a new line. You can temporarily disable the help lines by pressing the Alt key.

Evaluation Copy. Do not reproduce. For information visit www.cadcim.com

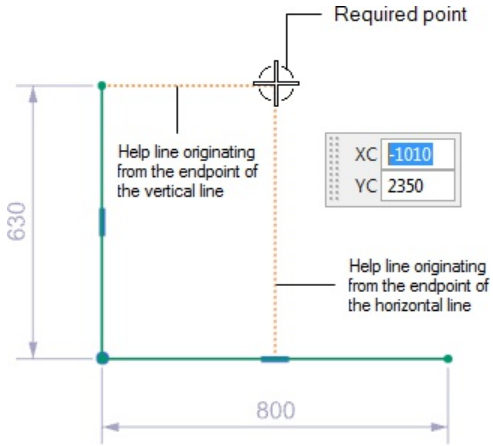

Figure 2-17 *Using the help lines to locate a point*

Drawing Individual Lines

Ribbon:	Home > Curve > Line
Menu:	Insert > Curve > Line



NX also allows you to draw individual lines. This can be done by using the **Line** tool. The working of this tool is similar to the working of the line mode of the **Profile** tool. The only difference is that this tool allows you to draw only one line. As a result, after you specify the endpoint of the line, no rubber-band line is displayed. Instead, you will be prompted to specify the first point of the line. You can specify the first point and the second point of the lines by picking points on the screen or by entering values in the dynamic input boxes. You can use this tool to draw as many individual lines as required.

Drawing Arcs

Ribbon:	Home > Curve > Arc
Menu:	Insert > Curve > Arc



NX allows you to draw arcs using two methods. You can select a method by choosing its respective button from the **Arc** dialog box that will be displayed when you invoke the **Arc** tool. The methods of drawing arcs are discussed next.

Drawing Arcs Using Three Points



In this method, you can draw an arc by specifying its start point, endpoint, and a point on the arc. When you invoke the **Arc** tool, this method is activated by default and you will be prompted to specify the start point of the arc. You can specify the start point by clicking in the drawing window or by entering the coordinates in the dynamic input boxes. After specifying the start point of the arc, you will be prompted to specify the endpoint. You can also specify the radius of the arc by entering its value in the dynamic input box.

Note that the next prompt will depend on how you specify the endpoint. If you specify the endpoint of the arc by clicking a point in the drawing window, you will be prompted to select a point on the arc and the **Radius** dynamic input box will be displayed. However, if you specify the radius of the arc in the dynamic input box after specifying the start point, then you will be

Evaluation Copy. Do not reproduce. For information visit www.cadcim.com

prompted to specify the endpoint of the arc. You can click anywhere in the drawing window to draw the arc. Figure 2-18 shows a three-point arc being drawn by specifying two endpoints and a point on the arc.



Tip

While drawing an arc by specifying its three points, if the start point is at the endpoint of an existing entity, the resultant arc can be drawn tangent to the selected entity. To do so, while defining the point on the arc, move the cursor such that the resulting arc is tangent to the selected entity.

Drawing an Arc by Specifying its Center Point and Endpoints



In this method, you can draw an arc by specifying its center point, start point, and endpoint. To invoke this method, choose the **Arc by Center and Endpoints** button from the **Arc** dialog box; you will be prompted to specify the center point of the arc. Specify the center point of the arc by clicking in the drawing area or by entering coordinates in the dynamic input boxes. On doing so, you will be prompted to specify the start point of the arc. After specifying the start point of the arc, you will be prompted to specify the endpoint of the arc. Note that when you specify the start point of the arc after specifying the center point, the radius of the arc will automatically be defined. Therefore, the endpoint is used only to define the arc length. Figure 2-19 shows an arc being drawn using this method.

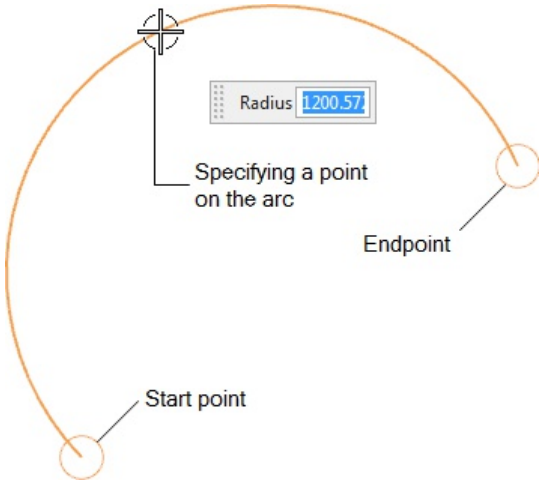

Figure 2-18 *Drawing a three-point arc*

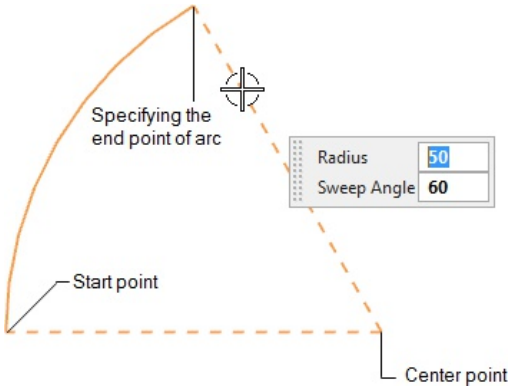

Figure 2-19 *Drawing an arc by specifying its center, start, and end points*



Tip

After specifying the center point of the arc, you can also specify its radius and the sweep angle in the dynamic input boxes. In this case, you will be prompted to specify the start point and then the endpoint of the arc. The endpoint will define the direction of the arc.

Evaluation Copy. Do not reproduce. For information visit www.cadcim.com

Drawing Circles

Ribbon:	Home > Curve > Circle
Menu:	Insert > Curve > Circle



In NX, you can draw circles using two methods. These methods can be activated by choosing their respective buttons from the **Circle** dialog box that are displayed when you invoke the **Circle** tool. The methods of drawing circles are discussed next.

Drawing a Circle by Specifying the Center Point and Diameter



This is the default and most widely used method of drawing circles. In this method, you need to specify the center point of a circle and a point on the circumference of the circle. The point on the circumference of the circle defines the radius or the diameter of the circle. To draw a circle using this method, choose the **Circle by Center and Diameter** button from the **Circle** dialog box; you will be prompted to specify the center point of the circle. Specify the center point of the circle in the drawing window. Next, you will be prompted to specify a point on the circle. Specify a point to define the radius. Alternatively, you can enter the value of the diameter in the dynamic input box. Figure 2-20 shows a circle being drawn by using this method.

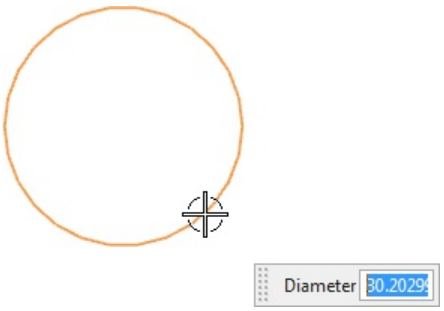

Figure 2-20 *A circle drawn using the Circle by Center and Diameter method*



Tip

After specifying the center point of the circle if you specify the value of diameter in the dynamic input box, the circle of the specified diameter will be created. Also, a preview of the circle of the same diameter will be attached to the cursor. Now, you can place multiple copies of the circle by specifying the center point.

Drawing a Circle by Specifying Three Points



In this method, the circle is drawn by specifying three points on circumference. To invoke this method, choose the **Circle by 3 Points** button from the **Circle** dialog box; you will be prompted to specify the first point of the circle. This point is actually the first point on the circumference of the circle. After specifying the first point, you will be prompted to specify the second point of the circle. On specifying these two points, small reference circles will be displayed on these two points, as shown in Figure 2-21. Now, specify the third point, which is a point on the circle. You can also enter its diameter value in the **Diameter** input box. If you enter the diameter of the circle in the **Diameter** input box, you need to click in the drawing window to specify the placement point for the circle. This completes the creation of the circle.

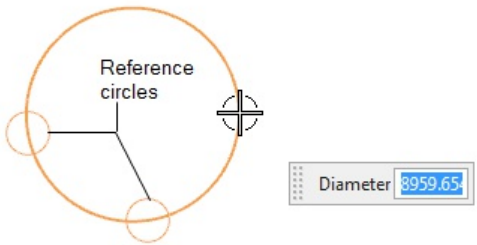

Figure 2-21 *Circle drawn by using the 3 Points method*

Evaluation Copy. Do not reproduce. For information visit www.cadcim.com

Drawing Rectangles

Ribbon:	Home > Curve > Rectangle
Menu:	Insert > Curve > Rectangle



In NX, you can draw rectangles by using three methods. These methods can be used by choosing their respective buttons from the **Rectangle** dialog box. To invoke this dialog box, choose the **Rectangle** tool from the **Curve** group. The three methods of drawing rectangles are discussed next.

Drawing Rectangles by Specifying Corners



The **By 2 Points** method is used to draw a rectangle by specifying the diagonally opposite corners of rectangle. When you invoke the **Rectangle** tool, the **By 2 Points** button is chosen by default in the **Rectangle Method** area of the **Rectangle** dialog box. Also, you will be prompted to specify the first point of the rectangle. This point will work as one of the corners of the rectangle. After specifying the first point, you will be prompted to specify the point to create the rectangle. This point will be diagonally opposite to the point that you have specified earlier. You can click anywhere on the screen to specify the second corner or enter the width and height of the rectangle in the dynamic input boxes. Figure 2-22 shows a rectangle being drawn by using the **By 2 Points** method.

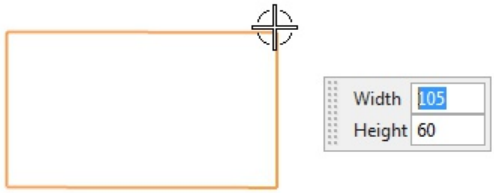

Figure 2-22 *Rectangle being drawn by using the* ***By 2 Points*** *method*



Tip

If you specify the width and height of a rectangle in the dynamic input boxes after specifying the first point, a preview of the rectangle with the specified width and height will be attached to the cursor. Now, you need to specify a point to define the direction of rectangle.

Drawing Three Points Rectangles



You can draw a three points rectangle by choosing the **By 3 Points** button from the **Rectangle** dialog box. In this method, you can draw a rectangle using three points. The first two points are used to define the length and angle of one of the sides of the rectangle and the third point is used to define the height of the rectangle. When you invoke this tool, you will be prompted to specify the first point of the rectangle. Once you specify the first point, you will be prompted to specify the second point of the rectangle. Both these corners are along the same direction. Therefore, these points define the length and orientation of the rectangle. Note that if you specify the second point at a certain angle, the resulting rectangle will also be at an angle. After specifying the second point, you will be prompted to specify a point to create the rectangle. This point is used to define the height of the rectangle. After specifying the first point, you can also specify the height, width, and the angle of the rectangle in the dynamic input boxes. Figure 2-23 shows an inclined rectangle drawn by using the **By 3 Points** method.

Evaluation Copy. Do not reproduce. For information visit www.cadcim.com

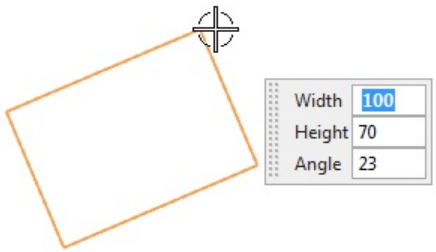

Figure 2-23 *Inclined rectangle drawn by using the* ***By 3 Points*** *method*

Tip

After specifying the first point of a rectangle, you can toggle between the ***By 2 Points*** *and* ***By 3 Points*** *buttons by holding and dragging the left mouse button.*

Drawing Centerpoint Rectangles

You can draw a centerpoint rectangle by choosing the **From Center** button in the **Rectangle** dialog box. Using this method, you can draw a rectangle using three points. However, the first point is taken as the center of the rectangle in this case. When you invoke this tool, you will be prompted to specify the center point of the rectangle. Once you specify the center point, you will be prompted to specify the second point of the rectangle. Both these points are along the same direction. Therefore, these points define the width of the rectangle. Note that if you specify the second point at a certain angle, the resulting rectangle will also be created at that specified angle. After specifying the second point, you will be prompted to specify a point to create the rectangle. This point is used to define the height of the rectangle. Alternatively, you can specify the height, width, and angle of the rectangle in the dynamic input boxes which appear after you specify the first point for creating the rectangle.

Placing Points

Ribbon: Home > Curve > Point
Menu: Insert > Datum > Point

Point

In NX, you can place points by clicking in the drawing window. To place a point, choose the **Point** tool from the **Curve** group; the **Sketch Point** dialog box will be displayed, refer to Figure 2-24, and you will be prompted to select a point. Click in the drawing window; the point will be placed at the specified location. Also, the horizontal and vertical dimensions between the point and the origin point of the sketch will be displayed. You can edit these dimensions to change the location of the point.

Tip

If tools to be invoked are not visible by default in the ***Curve*** *group of the* ***Home*** *tab, you need to expand the* ***Curve*** *gallery of the* ***Curve*** *group. To expand the* ***Curve*** *gallery, click on the* ***Group Options*** *down arrow available at the lower right corner in the* ***Curve*** *group.*

You can also place a point by using the **Point** dialog box. To invoke this dialog box, choose the **Point Dialog** button from the **Sketch Point** dialog box; the **Point** dialog box will be displayed,

Evaluation Copy. Do not reproduce. For information visit www.cadcim.com

refer to Figure 2-25 and you will be prompted to select the object to infer point. This dialog box contains Type drop-down list at the top and three main rollouts, **Point Location**, **Output Coordinates**, and **Offset**. The options in these rollouts are discussed next.

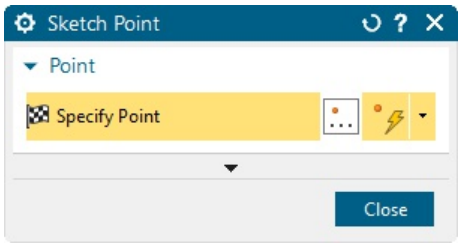

*Figure 2-24 The **Sketch Point** dialog box*

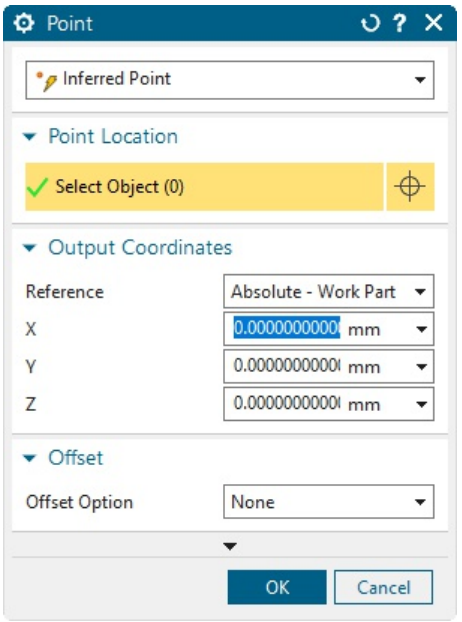

*Figure 2-25 The **Point** dialog box*

Type Drop-down List

Select an option from the drop-down list to specify the location for the resulting point. The options are discussed next.

Inferred Point

This option is selected by default. This option allows you to place a point in the drawing window. However, if there are some entities in the drawing window, then this option helps you to select the keypoints of the entity. For example, if there are a few lines in the drawing window, then this option helps you to select the endpoints or the midpoints of the lines.

Cursor Location

This option allows you to place a point at a location where you will click the cursor in the drawing window. If the **Cursor Location** option is selected, then the other entities in the drawing window will not be considered.

Existing Point

This option allows you to select the points that are already placed in the drawing window. As a result, you can place new point on top of the existing point.

End Point

This option allows you to place the point at the endpoint of the existing lines, arcs, or splines.

Evaluation Copy. Do not reproduce. For information visit www.cadcim.com

Control Point

This option allows you to place the point at the control point of the existing sketched entities. The control points include the endpoints and midpoints of lines or arcs, center points of circles, ellipses, control points of splines, and so on.

Intersection Point

This option allows you to place the point at the intersection point of the two existing sketched entities. To do so, select the **Intersection Point** option from the Type drop-down list; you will be prompted to select the first and second intersecting entities. Specify the two intersecting entities in the drawing area; a point will be placed at the intersection point of the two existing entities.

Arc/Ellipse/Sphere Center

This option allows you to place the point at the center of an existing arc, circle, ellipse, or sphere.

Angle on Arc/Ellipse

This option allows you to place the point on the circumference of the selected arc, circle, or ellipse such that the resulting point is at the specified angle with respect to X-axis. When you choose this option, the **Point** dialog box will be modified and you will be prompted to select an arc or an ellipse. Select the arc or the ellipse in the drawing; the point will be placed on the circumference of the selected entity. Next, enter the angle value for the point in the **Angle** edit box of the **Angle on Curve** rollout.

Quadrant Point

This option allows you to place the point at the quadrant of a circle, arc, or an ellipse. The point will be placed at the quadrant that is closest to the current location of the cursor.

Point on Curve/Edge

This option allows you to place the point on the selected curve or edge. The location of the point is defined in terms of its curve parameter percentage from the start point of the curve. When you select the **Point on Curve/Edge** option, the **Point** dialog box will be modified and you will be prompted to select the curve to specify the point location. Click anywhere on the curve or the edge; you will be prompted to specify the curve parameter percentage. You can specify the curve parameter by using the **Location** drop-down list in the **Location on Curve** rollout of the **Point** dialog box. You can also enter the distance of the point in the **Curve Length** edit box of the **Location on Curve** rollout.

Point on Face

This option allows you to place the point on the selected face. The location of the point is defined by specifying values in the **U Parameter** and **V Parameter** edit boxes. The **U Parameter** edit box is used to specify the horizontal position of the point whereas the **V Parameter** is used to specify the vertical position of the point. The values of these edit boxes must lie between 0.0 and 1.0. As value of the **U Parameter** edit box increases, the position of the point shifts from right to left; and if the value of the **V Parameter** edit box increases, the position of the point shifts from bottom to top. Note that this option will be available only when you invoke the **Point** dialog box by choosing **Menu > Insert > Datum > Point** from the **Top Border Bar** in the Modeling environment.

Evaluation Copy. Do not reproduce. For information visit www.cadcim.com

Between Two Points

This option allows you to create a point between two existing points or between two keypoints of an entity. When you select this option from the Type drop-down list, the **Point** dialog box will be modified and you will be prompted to select object to infer point. Select the first point from the drawing window; you will be prompted again to select object to infer point. Select the second point; a point will be created between the two selected points. You can change the location of this point by entering the percentage value in the **%Location** edit box of the **Location Between Points** rollout.

By Expression

This option allows you to specify a point expression by using the X, Y, and Z coordinates. When you select this option from the Type drop-down list, the **Point** dialog box will be modified with new rollouts such as **Choose Expression**, **Output Coordinates**, and **Offset**. The **Choose Expression** rollout is used to display the point expression created already in the part. To create a new expression, choose the **Create Expression** button; the **Expressions** dialog box will be invoked displaying the **Visibility** and **Actions** rollouts. To create a new expression, choose the **New Expression** button from the **Actions** rollout. Next, enter the name of the point expression in the **Name** edit box and then edit the point formula as per your requirement in the **Formula** edit box. Once you have edited the values of the X, Y, and Z coordinates in the **Formula** edit box, choose the **OK** button from this dialog box; the **Point** dialog box will be displayed. The newly created point expression will be listed in the list box available in the **Choose Expression** rollout. Select the point expression from the list and then choose the **OK** button from the **Point** dialog box; a point will be created with the specified coordinates in the expression.

Point Location Rollout

This rollout is used to place a point in the drawing area and will not be available for the **Intersection Point**, **Angle on Arc/Ellipse**, **Point on Curve/Edge**, and **Point on Face** options.

Output Coordinates Rollout

This rollout is used to enter the X, Y, and Z coordinates to specify the location of the point. Also, you can specify or determine the 3D location of the points using this rollout. You can specify the point relative to the Work Coordinate System (WCS) or Absolute Coordinate System by selecting respective options from the **Reference** drop-down list in the **Output Coordinates** rollout.

Offset Rollout

This rollout is used to create a point at a specified distance from a pre-selected point. You can select an option to specify the distance of the required point from the **Offset Option** drop-down list in this rollout. The options in this drop-down list are discussed next.

Rectangular

This option allows you to create a point by specifying its X, Y, Z coordinates with respect to the pre-selected point in the **Delta X**, **Delta Y**, and **Delta Z** edit boxes, respectively.

Cylindrical

This option allows you to create a point according to the cylindrical coordinate system with respect to the pre-selected point by specifying the radius, angle, and Z direction coordinate values in the **Radius**, **Angle**, and **Delta Z** edit boxes, respectively.

Evaluation Copy. Do not reproduce. For information visit www.cadcim.com

Spherical

This option allows you to create a point according to the spherical coordinate system with respect to the pre-selected point by specifying the Radius, Angle 1, and Angle 2 in their respective edit boxes.

Along Vector

This option allows you to create a point along the specified vector direction at a distance specified in the **Distance** edit box.

Along Curve

This option allows you to create a point along the specified curve. The distance of the point along the arc can be specified by entering the **Arc Length** or **Percentage** value in the respective edit box.

Drawing Ellipses or Elliptical Arcs

Ribbon:	Home > Curve > More Gallery > Curve Gallery > Ellipse *(Customize to Add)*
Menu:	Insert > Curve > Ellipse



In NX, you can draw ellipses or elliptical arcs byusing the **Ellipse** tool. To invoke this tool, choose **Menu > Insert > Curve > Ellipse** option from the **Top Border Bar**; the **Ellipse** dialog box will be displayed, as shown in Figure 2-26. Also, you will be prompted to select a point to specify the center point of the ellipse.



Note

*The **Ellipse** tool is available in the **More gallery** of the **Curve** group in the **Home** tab of the sketching environment. By default, the **More gallery** is not visible in the **Curve** group. To make it visible in the **Curve** group, click on the **Group Options** down arrow available on the right corner of this group; the **Curve** flyout will be displayed. Next, click on the **More Gallery** option in the flyout; it will become visible in the **Curve** group.*

Click anywhere on the screen. Choose the **Point Dialog** button from the **Center** rollout; the **Point** dialog box will be displayed, refer to Figure 2-25. Using the **Point** dialog box, you can define the center point of the ellipse. Alternatively, you can define the center point of the ellipse by selecting the required option from the **Inferred Point** drop-down list available in the **Center** rollout. After defining the center point by using the **Point** dialog box, choose the **OK** button from it; the **Ellipse** dialog box will be displayed again. Also, a preview of the ellipse will be displayed. Next, specify the major and the minor radii of the ellipse in the **Major Radius** and **Minor Radius** edit boxes in the **Ellipse** dialog box, respectively. If you want to draw an elliptical arc, clear the **Closed** check box in the **Limits** rollout; the **Ellipse** dialog box will be modified and the **Start Angle** and **End Angle** edit boxes for the arc will appear in it. You can specify the start and end angles in their respective edit boxes. Figure 2-27 shows the parameters related to an ellipse and Figure 2-28 shows the parameters related to an elliptical arc. If you want to retain the complement of the elliptical arc, choose the **Complement** button below the **End Angle** edit box in the **Limits** rollout; the preview of the complement of the elliptical arc will be displayed. Figure 2-29 shows an elliptical arc and Figure 2-30 shows the complement of the elliptical arc.

Evaluation Copy. Do not reproduce. For information visit www.cadcim.com

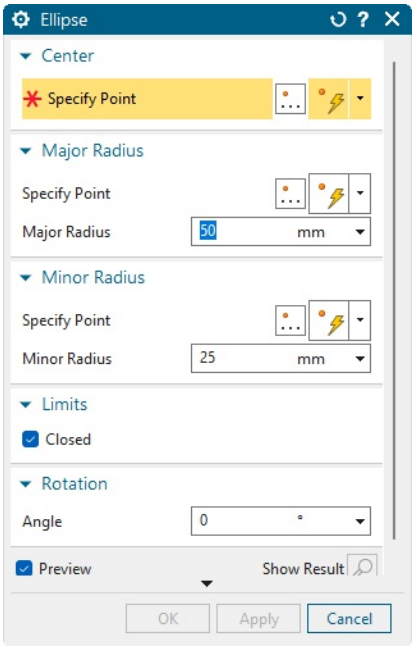

Figure 2-26 *The* ***Ellipse*** *dialog box*

Note that Figure 2-27 shows an inclined ellipse. To create an inclined ellipse, you need to enter rotation angle in the **Angle** edit box of the **Rotation** rollout. The specified angle value will be measured with respect to X-axis in the counterclockwise direction.

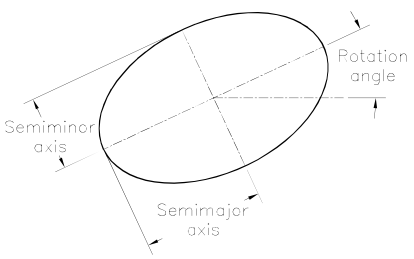

Figure 2-27 *Parameters related to an ellipse*

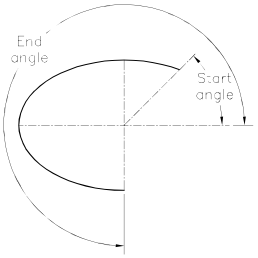

Figure 2-28 *Parameters related to an elliptical arc*

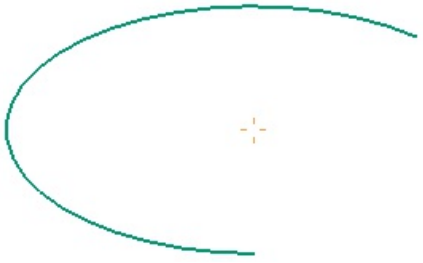

Figure 2-29 *An elliptical arc*

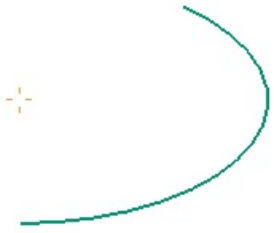

Figure 2-30 *Complement of the elliptical arc shown in Figure 2-29*

Evaluation Copy. Do not reproduce. For information visit www.cadcim.com

Drawing Conics

Ribbon: Home > Curve > More Gallery > Curve Gallery > Conic *(Customize to Add)*
Menu: Insert > Curve > Conic

The **Conic** tool allows you to create a conic section in the sketching environment using three points. The first two points define the endpoints of the conic and the third point defines the apex of the conic. Also, you need to specify the projective discriminant value, termed as rho value. To invoke the **Conic** tool, choose **Menu > Insert > Curve > Conic** from the **Top Border Bar**; the **Conic** dialog box will be displayed, as shown in Figure 2-31. In this dialog box, you can specify the start point and end point of the conic using the options in the **Limits** rollout. After specifying the start point and the endpoint of the conic, you need to specify the apex of the conic as the third point. Specify the apex of the conic by using the options in the **Specify Control Point** area of the **Control Point** rollout. Next, enter the Rho value in the **Value** edit box.

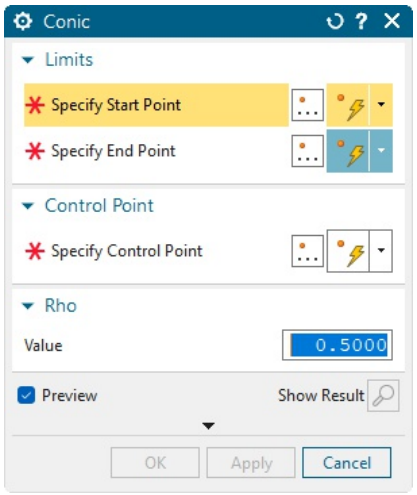

Figure 2-31 *The* ***Conic*** *dialog box*

This Rho value will define the exact shape of conics.

If 0 < Rho < 0.5, then conics of elliptical shape will be created.
If Rho = 0.5, then conics of parabolic shape will be created.
If 0.5 < Rho < 1, then conics of hyperbolic shape will be created.

Figure 2-32 shows conics with different Rho values.

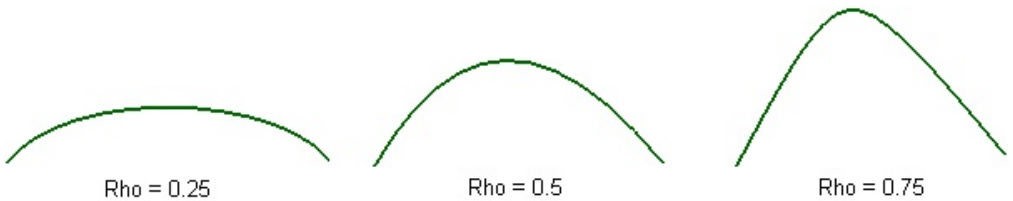

Figure 2-32 *Conics with different Rho values*

Tip
Sometimes while placing points or drawing an ellipse, some red cross marks are displayed on the screen. To remove them, refresh the screen by pressing the F5 key.

Drawing Studio Splines

Ribbon: Curve > Base > Studio Spline
Menu: Insert > Curve > Studio Spline

The **Studio Spline** tool allows you to create studio splines for creating free form features. When you invoke this tool, the **Studio Spline** dialog box will be displayed, as shown in Figure 2-33. The various rollouts in this dialog box are discussed next.

Evaluation Copy. Do not reproduce. For information visit www.cadcim.com

Note
*The **Studio Spline** tool is available only in the Modeling environment.*

Type Drop-down List

There are two options in the drop-down list for drawing studio splines which are discussed next.

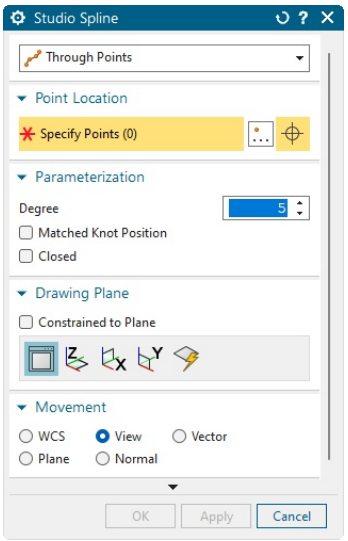

***Figure 2-33** The **Studio Spline** dialog box*

Through Points

This is the default option selected for drawing splines. Here, you can specify continuous points in the drawing area by clicking the left mouse button. These points will act as the defining points of the spline. While drawing a spline, you can move these points to change the shape of the spline, and then continue drawing the spline. Figure 2-34 shows a spline being drawn by using this method.

By Poles

If you select this option,, the points that you specify in the drawing window act as the poles of the spline. Figure 2-35 shows a spline being drawn by using this method. Remember that the display of poles is automatically removed when you finish drawing the spline.

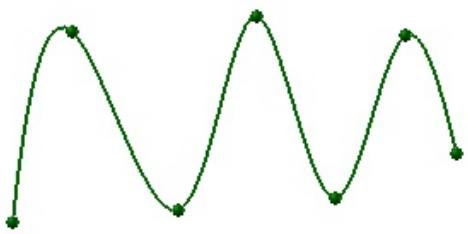

***Figure 2-34** Drawing a spline by using the **Through Points** option*

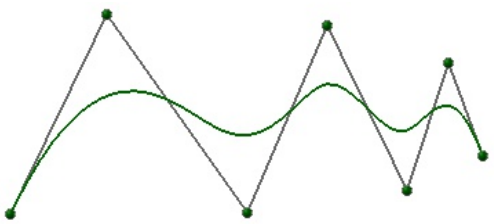

***Figure 2-35** Drawing a spline by using the **By Poles** option*

Point Location / Pole Location Rollout

The options in this rollout are used to specify the spline point or pole location. You can use the **Point Constructor** button to create or locate a point.

Parameterization Rollout

The options in this rollout are used to specify the parameters of the spline.

Degree Spinner

The **Degree** spinner is used to specify the degree of a spline. Figures 2-36 and 2-37 show splines of various degrees. Note that the degree of a spline cannot be more than the number of poles used to draw it.

Evaluation Copy. Do not reproduce. For information visit www.cadcim.com

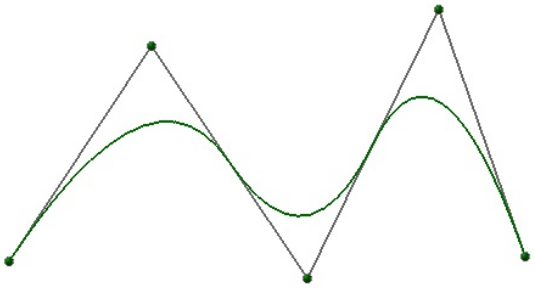

Figure 2-36 *Spline of degree 2*

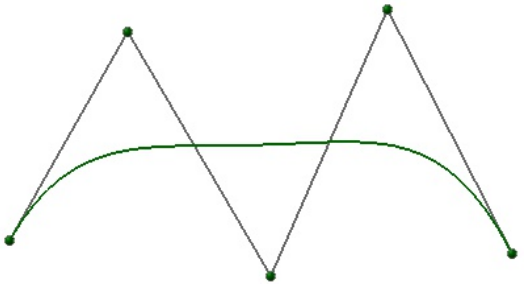

Figure 2-37 *Spline of degree 4*

Single Segment

This check box is available only when you select the **By Poles** option and is used to create a single segment spline. However, you can specify as many numbers of poles as you require. If you select this check box, the **Closed** check box will not be activated.

Matched Knot Position

This check box is available only when you select the **Through Points** option and is used to create a spline by matching the position of the defining points with the knots. In this case, the knots are placed only at the places where the defining points are specified. If you select this check box, the **Closed** check box will not be activated.

Closed

This check box is available for both the methods and is used to create closed splines. Figure 2-38 shows a closed spline.

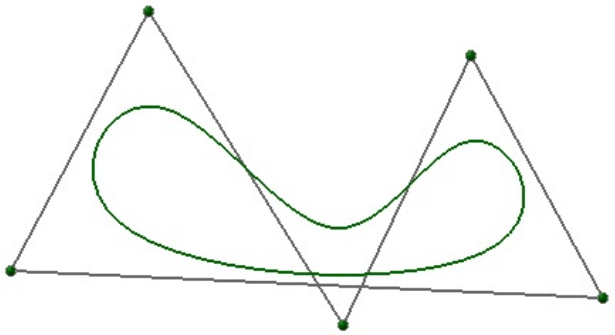

Figure 2-38 *A closed spline*

Filleting Sketched Entities

Ribbon:	Home > Curve > Fillet
Menu:	Insert > Curve > Fillet

Filleting is defined as the process of rounding the sharp corners of a profile to reduce the stress concentration. Fillets are created by removing the sharp corners and replacing them with round corners. In NX, you can create a fillet between any two sketched entities. You can also create a fillet using three sketched entities.

Evaluation Copy. Do not reproduce. For information visit www.cadcim.com

To create fillets, invoke the **Fillet** tool; the **Fillet** dialog box will be displayed, as shown in Figure 2-39. Also, you will be prompted to select or drag the cursor over curves to create a fillet.

The **Radius** dynamic input box will be displayed below the cursor. You do not need to necessarily specify the fillet radius in advance. Instead, you can select the two entities to fillet and then move the cursor to define the radius of the fillet. Figure 2-40 shows the preview of a fillet being created between two lines. In this case, the radius value is not defined in advance. As a result, as you move the cursor, the fillet radius is modified dynamically. The **Fillet** dialog box is divided into two areas, **Fillet Method** and **Options**.



Figure 2-39 *The **Fillet** dialog box*

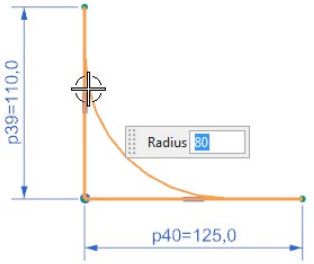

Figure 2-40 *Preview of a fillet being created between two lines*

Fillet Method Area

The first button in this area is the **Trim** button and is chosen by default. As a result, the sharp corner will automatically be trimmed after filleting, as shown in Figure 2-41. If you choose the **Untrim** button, the sharp corner will not be trimmed after filleting, as shown in Figure 2-42.



Figure 2-41 *Sharp corner before and after filleting using the **Trim** button*

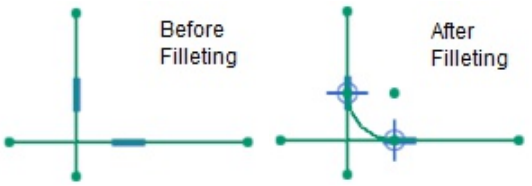

Figure 2-42 *Sharp corner before and after filleting using the **Untrim** button*



Tip

Ideally, the profiles created with the fillet may not give the desired result when used to create features. Therefore, they should be avoided in the sketch.

Options Area

The **Delete Third Curve** button in this area is useful if you are creating a fillet by using three entities. While using this option, the middle entity should be selected last. This button ensures that if the fillet is tangent to the middle entity then the middle entity is automatically deleted, as shown in Figure 2-43. If this button is deactivated, the middle entity will not be deleted, as shown in Figure 2-44. The **Create Alternate Fillet** button in this area will show all the alternative solutions for the fillet. It is recommended that this button should be turned off.

Evaluation Copy. Do not reproduce. For information visit www.cadcim.com

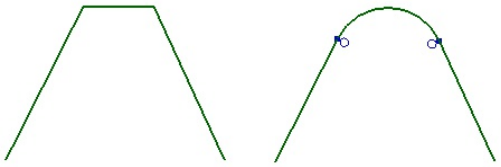

Figure 2-43 *The entity before and after filleting with the third curve deleted*

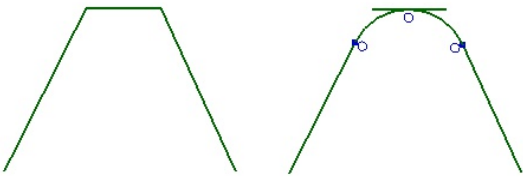

Figure 2-44 *The entity before and after filleting with the third curve retained*



Tip

1. In NX, you can create fillets by simply dragging the cursor across the entities that you need to fillet. For example, if you need to create a fillet between two lines, invoke the ***Fillet*** *tool and drag the cursor across them; the corner of these two lines will be filleted. The radius of the fillet will depend on how far you dragged the mouse from the corner.*

2. When you fillet two entities, if there is more than one solution for fillet, then the best solution will be displayed by default. If you want to view the alternate solution, press the PAGE UP key.

THE DRAWING DISPLAY TOOLS

The drawing display tools are an integral part of any solid modeling tool. These tools enable you to zoom, pan, and rotate the drawing so that you can view it clearly. The drawing display tools in NX are located in the **View** tab in the **Ribbon** and the methods of using these tools are discussed next.



Note

As most of the drawing display tools are transparent tools, you can use them at any time without exiting the other tool you are working with.

Fitting Entities in the Current Display

Ribbon:	View > Operation > Fit
Menu:	View > Operation > Fit



The **Fit** tool enables you to modify the drawing display area such that all entities in the drawing fit in the current display. You can also use the Ctrl+F keys to fit the entities in the current display.

Zooming an Area

Ribbon:	View > Operation > Zoom
Menu:	View > Operation > Zoom



The **Zoom** tool allows you to zoom into a particular area by defining a box around it. When you choose this tool, the default cursor is replaced by a magnifying glass cursor and you will be prompted to drag the cursor to indicate the zoom rectangle. Specify a point on the screen to define the first corner of the zoom area. Next, hold the left mouse button and drag the cursor. Now, release the left mouse button to specify another point to define

Evaluation Copy. Do not reproduce. For information visit www.cadcim.com

the opposite corner of the zoom area. The area defined inside the rectangle will be zoomed and displayed on the screen.

You can also zoom in or out a drawing by specifying a scale value. To do so, choose **Menu > View > Operation > Zoom** from the **Top Border Bar**; the **Zoom View** dialog box will be displayed, as shown in Figure 2-45. Specify a scale value in the **Scale** edit box. In addition, you can also use the **Half Scale**, **Double Scale**, **Reduce 10%**, and **Increase 10%** buttons to zoom in or out of the drawing.

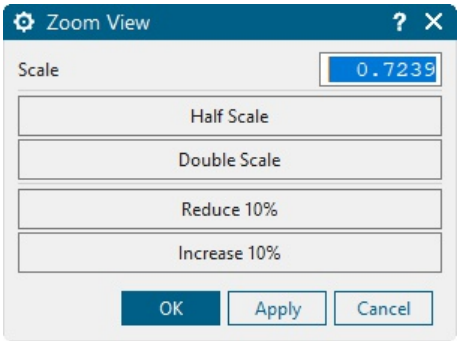

Figure 2-45 *The* ***Zoom View*** *dialog box*

Dynamic Zooming

Ribbon: View > Operation > More Gallery > View Operation Gallery > Zoom In/Out *(Customize to Add)*

The **Zoom In/Out** tool enables you to dynamically zoom in or out of the drawing. When you invoke this tool, the default cursor is changed into a magnifying glass cursor with a '+' and a '-' sign at the center of the cursor. To zoom in, press and hold the left mouse button in the drawing window and then drag the cursor upward. Similarly, to zoom out, press and hold the left mouse button and drag the cursor down.

Panning Drawings

Ribbon: View > Operation > Pan
Menu: View > Operation > Pan

The **Pan** tool allows you to dynamically pan drawings in the drawing window. When you invoke this tool, the cursor is replaced by a hand cursor and you will be prompted to drag the cursor to pan the view. Press and hold the left mouse button in the drawing window and then drag the mouse to pan the drawing.

Tip

In NX, you can also display the Selection MiniBar and the View shortcut menu by right-clicking in the drawing area. The Selection MiniBar is a compact version of the ***Selection Group****.*

Fitting View to Selection

Ribbon: View > Operation > More Gallery > View Operation Gallery > Fit View to Selection *(Customize to Add)*
Menu: View > Operation > Fit View to Selection

The **Fit View to Selection** tool zooms the display such that the selected entity fits in the current display area. This tool is available only when an entity is selected in the drawing window.

Evaluation Copy. Do not reproduce. For information visit www.cadcim.com

Restoring the Original Orientation of the Sketching Plane

Ribbon:	View > Sketch Display > Orient to Sketch
Menu:	View > Orient View to Sketch



Sometimes while using the drawing display tools, you may change the orientation of the sketching plane. The **Orient View to Sketch** tool restores the original orientation that was active when you invoked the Sketch in Task Environment. This tool is available only in the Sketch in Task Environment.

SETTING SELECTION FILTERS IN THE SKETCH IN TASK ENVIRONMENT

NX provides you with various object selection filters in the Sketch in Task Environment. These filters allow you to define the types of entities you want to select. All these filters are available in the **Selection Group** on the upper left corner in the **Top Border Bar** of the drawing window. Some of these filters are discussed next.

Type Filter

The **Type Filter** drop-down list is used to specify the type of entity to be selected as filter type. By default, the **No Selection Filter** option is selected, refer to Figure 2-46. This option allows you to select any entity from the drawing window. These entities include sketch, datums, curve, point, face, and so on. Select the required entity from the **Type Filter** drop-down list. Now, you can select only the specified entity from the drawing window.

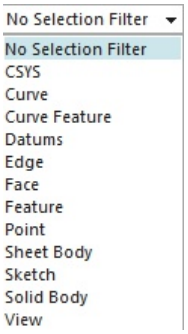

Figure 2-46 *The* ***Type Filter*** *drop-down list*

Selection Scope

This drop-down list allows you to filter the selection from the entire assembly, within the workpart and components, the workpart only, or the active sketch only. Select the required option from the **Selection Scope** drop-down list.

General Selection Filters



This flyout provides the detailed filter options. The options in the **General Selection Filters** flyout, as shown in Figure 2-47, are discussed next.



Note

The ***General Selection Filters*** *flyout is not available by default in the* ***Top Border Bar*** *of the drawing window. You can click on the* ***Ribbon Options*** *down arrow available at the right in the* ***Top Border Bar*** *and then choose* ***Selection Group > General Selection Filters****; the flyout will be added to the* ***Top Border Bar****.*

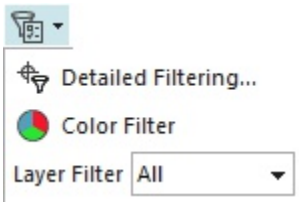

Figure 2-47 *The* ***General Selection Filters*** *flyout*

Evaluation Copy. Do not reproduce. For information visit www.cadcim.com

Detailed Filtering

This option is used to filter the selection using layers, type of entity, display attributes, and detailed types of entity. Select the **Detailed Filtering** option in the **General Selection Filters** flyout; the **Detailed Filtering** dialog box will be displayed. In this dialog box, you can specify layers, types of entity, details of the types of entity, and display attributes that you need to filter.

Color Filter

This option allows you to filter the selection using a specific color. Only the entities in the specified color will be selected.

Layer Filter

This drop-down list allows you to filter the selection using a specific layer. You need to select the layer from the **Layer Filter** drop-down list and the entities in this layer can only be selected. By default, the **All** option is selected, which allows to select the entities from all the layers.

Reset Filters



This tool is used to reset all the filtering options defined in the **General Selection Filters** flyout and the **Type Filter** drop-down list to their default states.

Allow Selection of Hidden Wireframe



This tool allows you to select the hidden wireframe geometries such as curves and edges. This tool is not available by default in the **Top Border Bar** of the drawing window. You can click on the **Ribbon Options** down arrow available at the right in the **Top Border Bar** and then choose **Selection Group > Allow Selection of Hidden Wireframe**; the tool will be added to the **Top Border Bar**.

Deselect All



When you choose this tool, all the currently selected entities are deselected.

Find in Navigator



This tool is used to highlight the selected entities in the **Part Navigator** or **Assembly Navigator** and will be activated only when you select an entity. Select the entities that you want to highlight in the **Part Navigator** or **Assembly Navigator** and choose the **Find in Navigator** tool in the **Selection Bar**. Next, choose the **Part Navigator** tab from the **Resource Bar** to view the highlighted entities. Note that, this tool will not be available in the **Sketch in Task Environment**.

SELECTING OBJECTS

After setting the selection filters, you can select objects in the drawing window of NX. When no tool is active, the select mode will be invoked. In this mode, you can select individual sketched entities from the drawing window by clicking on them. NX provides three methods for selection of multiple entities. If you want to select multiple entities at once, you can use the tools available in the **Multi-Select Gesture Drop-down** of the **Selection Group** in the **Top Border Bar**. These tools are discussed next.

Evaluation Copy. Do not reproduce. For information visit www.cadcim.com

Rectangle



If you choose this tool from the **Multi-Select Gesture Drop-down** of the **Selection Group** in the **Top Border Bar** and drag the cursor in the drawing window, a temporary rectangle will be created. Also, all the objects lying completely within the temporary rectangle will get selected.

Lasso



If you choose this tool from the **Multi-Select Gesture Drop-down** of the **Selection Group** in the **Top Border Bar** and drag the cursor in the drawing window, a temporary free form curve will be created. Also, all the objects lying completely within the free form curve will get selected.

Circle



If you choose this tool from the **Multi-Select Gesture Drop-down** of the **Selection Group** in the **Top Border Bar** and drag the cursor in the drawing window, a temporary circle will be created. Also, all the objects lying completely within the temporary circle will get selected.

DESELECTING OBJECTS

By default, the selected objects are displayed in orange color. If you want to deselect the individual entities from the selection, press and hold the Shift key and click on the particular entity you want to exclude from the selection group; the entity will be deselected. If you want to deselect all the selected entities, press the Esc key. Alternatively, press and hold the Shift key and drag a box around the entities; all the entities that lie completely inside the box will get deselected. Also, you can choose the **Deselect All** tool from the **Selection Group** in the **Top Border Bar** to deselect all the selected entities.

USING SNAP POINT OPTIONS WHILE SKETCHING

While drawing a sketch, you will notice that the cursor automatically snaps to some keypoints of the sketched entities. For example, if you are specifying the center point of a circle and you move the cursor close to the endpoint of an existing line, the cursor snaps to the endpoint of the line and changes into a snap cursor. Also, the endpoint snap symbol is displayed below the cursor. This suggests that the endpoint of the line has been snapped and if you click now, the center point of the circle will coincide with the endpoint of the line.

NX allows you to control these snap settings using the snap points options available in the **Snap Point** flyout of the **Selection Group** in the **Top Border Bar**, as shown in Figure 2-48. In this bar, some of the tools are chosen by default. You can choose more tools to turn on the respective snapping option.

Evaluation Copy. Do not reproduce. For information visit www.cadcim.com

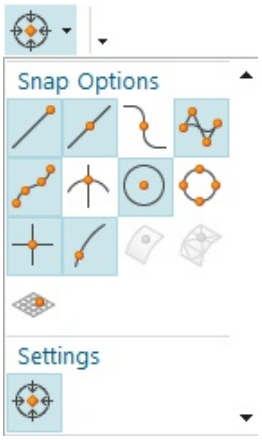

Figure 2-48 *The* ***Snap Point*** *flyout used for snap settings*

DELETING SKETCHED ENTITIES

Menu: Edit > Delete

You can delete the sketched entities by selecting them and pressing the Delete key. You can also delete a sketched entity by choosing **Menu > Edit > Delete** tool from the **Top Border Bar**. However, if you choose this tool without selecting any sketched entity, the **Delete Sketch Object** dialog box will be displayed, as shown in Figure 2-49. You can now select the entities to be deleted and then choose the **OK** button in this dialog box.

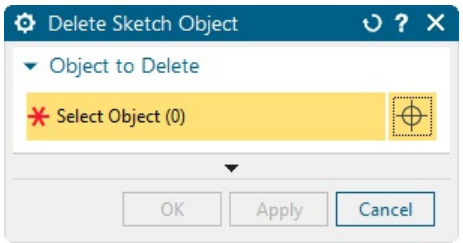

Figure 2-49 *The* ***Delete Sketch Object*** *dialog box*

DIMENSIONING SKETCHES

After creating a sketch, you need to apply different types of dimensions (dimensional constraints) to it. The purpose of dimensioning is to control the size of the sketch and to place it with reference to some other entity. Also, sometimes you may need to add additional dimensions to the sketch to fully constrain it. In NX, you can apply the dimensions by using the tools grouped together in the **Solve** group of the **Home** tab in the sketching environment. You can click on the **Group Options** arrow at the bottom of the **Solve** group to display a flyout and then choose the required tools to add them in the group. Figure 2-50 shows the **Solve** group with all the tools.

The dimensioning tools available in the **Dimensions** drop-down of this group are listed below:

1. Rapid Dimension
2. Linear Dimension
3. Angular Dimension
4. Radial Dimension
5. Perimeter Dimension

Evaluation Copy. Do not reproduce. For information visit www.cadcim.com

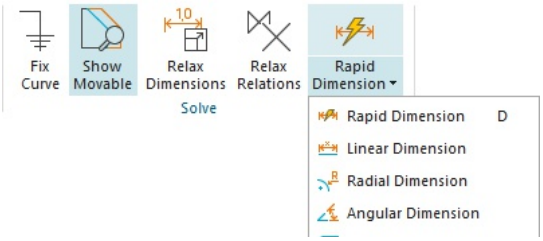

Figure 2-50 *The* ***Solve*** *group*

Applying Dimensions by Using the Rapid Dimension Tool

Ribbon:	Home > Solve > Dimensions drop-down > Rapid Dimension
Menu:	Insert > Dimensions > Rapid

The **Rapid Dimension** tool is used to apply dimension depending upon the entity selected. For example, if you select an arc, the radial dimension will be applied. Similarly, if you select a circle, the diameter dimension will be applied and on selecting a line, linear dimension will be applied. Note that if you select an inclined line and move the cursor parallel to that line; an aligned dimension will be applied. If you move the cursor vertically upward or downward, a horizontal dimension will be applied. Similarly, if you move the cursor horizontally (right or left), a vertical dimension will be applied.

It is recommended that you use this tool to apply different type of dimensions as it saves the time required for selecting various dimensioning tools. To apply rapid dimensions, choose the **Rapid Dimension** tool from the **Dimensions** drop-down of the **Solve** group of the **Home** tab; the **Rapid Dimension** dialog box will be displayed and you will be prompted to select the object to be dimensioned. Now the dimension will be applied based on the selection procedure adopted while selecting objects. Figure 2-51 shows the radial and linear dimensions created by using the tool.

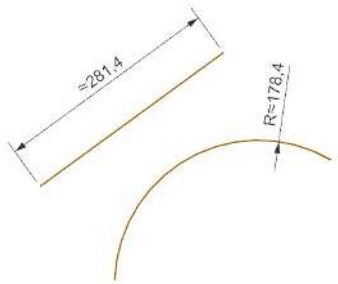

Figure 2-51 *The linear and radial dimensions created by using the* ***Rapid Dimension*** *tool*

Applying Linear Dimensions

Ribbon:	Home > Solve > Dimensions Drop-down > Linear Dimension
Menu:	Insert > Dimensions > Linear

The **Linear Dimension** tool is used to apply horizontal, vertical, or aligned dimension to a selected line or between two points. The points can be the endpoints of line or arc, or the center points of two circles, arcs, ellipses, or parabola, or any set of points that can be identified. To apply linear dimension to a sketch, choose the **Linear Dimension** tool from the **Dimensions Drop-down** of the **Solve** group of the **Home** tab, refer to Figure 2-50; the **Linear Dimension** dialog box will be displayed, as shown in Figure 2-52.

Evaluation Copy. Do not reproduce. For information visit www.cadcim.com

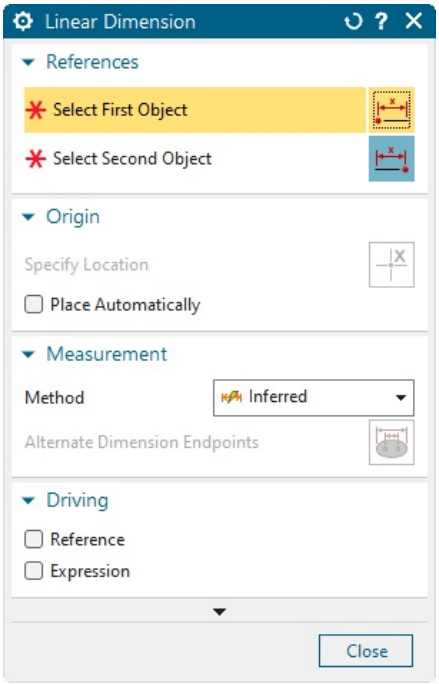

Figure 2-52 *The* ***Linear Dimension*** *dialog box*

The options in this dialog box are discussed next.

References Rollout

The options in this rollout are used to select the object to be dimensioned. Using the options in this rollout, you can select points or linear entities for applying the dimension.

Origin Rollout

The options in the **Origin** rollout is used to define the position of the dimension text. You can place the dimension at the required location. Place the dimension above or below (in case of horizontal) and left or right (in case of vertical) of the selected object by clicking at the desired place inside the drawing window. After placing the dimension, press Esc to exit the dialog box. Next, double-click on the dimension value; the **Distance** edit box will be displayed. Enter the required value in this edit box and then press Enter. Next, press Esc to exit the **Distance** edit box. Figure 2-53 shows the horizontal, vertical, and aligned dimensions applied to a line. The **Place Automatically** check box is used to place the dimension automatically according to the object.

Evaluation Copy. Do not reproduce. For information visit www.cadcim.com

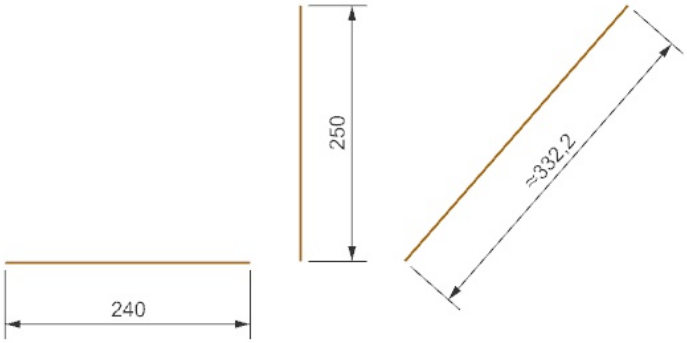

Figure 2-53 *The linear dimension created for a horizontal line, vertical line, and an inclined line*

Measurement Rollout

The options available in the **Method** drop-down list of this rollout are discussed next.

Inferred

The **Inferred** option is used to apply dimensions between entities based on the entities selected for dimensioning and the placement point.

Horizontal

The **Horizontal** option is used to apply horizontal dimension between entities. Note that if you select an entity that has a slant angle, only horizontal dimension can be applied.

Vertical

The **Vertical** option is used to apply vertical dimension between entities. Even if you select an entity that has a slant angle, a vertical dimension will be applied.

Point-to-Point

The **Point-to-Point** option is used to apply dimension between two points. You can select a set of points or a linear entity for applying dimension by using this option. Note that on selecting a linear entity, the dimension between its ends points will be applied, depending upon the entity selected.

Perpendicular

The **Perpendicular** option is used to create the perpendicular dimension between a linear object and a point. It is mandatory that any one of the objects selected is a linear object.

Cylindrical

The **Cylindrical** option is used to apply dimension between cylindrical sections of objects.

Driving Rollout

In the **Driving** rollout, the **Reference** check box is available. This check box is used to convert the dimension into a reference dimension instead of a driving dimension.

Evaluation Copy. Do not reproduce. For information visit www.cadcim.com



Note

If you create a redundant dimension, NX may inform you that the sketch is over-constrained. When you convert the dimension into a reference dimension, the sketch will no longer be over-constrained.

Settings Rollout

There are two buttons in this rollout and they are discussed next.

Settings



The **Settings** button is used to change the style of the dimensions that are being applied.

Inherit Dimension Settings



This button allows you to apply the style setting of an existing dimension to the dimensions being applied.

The **Enable Dimension Scene Dialogs** check box allows you to select access handles directly on different parts of the dimension to edit dimension settings.



Note

In the figures of this chapter, some of the dimension properties such as decimal places and labels have been modified for better display of dimensions. You can modify the dimension labels only when you are in the sketching environment. As discussed, you can invoke the sketching environment by using the ***Sketch*** *tool. To modify the dimension label, choose* ***Home*** *>* ***Construction*** *>* ***Sketch*** *from the* ***Ribbon****; the* ***Create Sketch*** *dialog box will be displayed. Next, choose the* ***OK*** *button from this dialog box; the sketching environment will be invoked. Now, choose* ***Menu >Task > Sketch Settings*** *from the* ***Top Border Bar****; the* ***Sketch Settings*** *dialog box will be displayed. In this dialog box, select the* ***Value*** *option from the* ***Dimension Label*** *drop-down list. Next, choose the* ***OK*** *button; the dimensions labels will be modified.*

Applying Radial Dimensions

Ribbon:	Home > Solve > Dimensions drop-down > Radial Dimension
Menu:	Insert > Dimensions > Radial



The **Radial Dimension** tool is used to apply the radial dimension to an arc or diametral dimension to a circle. To apply radial dimension, choose the **Radial Dimension** tool from the **Dimensions** drop-down of the **Solve** group of the **Home** tab, refer to Figure 2-50; the **Radial Dimension** dialog box will be displayed and you will be prompted to select the object for radial dimension . Select the object to be dimensioned and then place the dimension. After placing the dimension, press Esc to exit the dialog box. Next, double-click on the dimension value; the **Radius** or **Diameter** edit box will be displayed based on the selection of arc or circle. Enter the required value in this edit box, and then press Enter. Next, press Esc to exit the edit box. You can also select the type of dimension to be applied from the **Method** drop-down list in the **Measurement** rollout. In this drop-down list, the **Radial** option is used to define the radius and the **Diametral** option is used to define the diameter dimensions. However, if you select the **Inferred** option from the drop-down list, radius dimensions will be applied to arcs and diameter dimensions will be applied to circles automatically. Figure 2-54 shows the diametral dimension applied to a circle and Figure 2-55 shows the radial dimension applied to an arc.

Evaluation Copy. Do not reproduce. For information visit www.cadcim.com

Rest of the options in the **Radial Dimension** dialog box are the same as those discussed in the Linear Dimension.

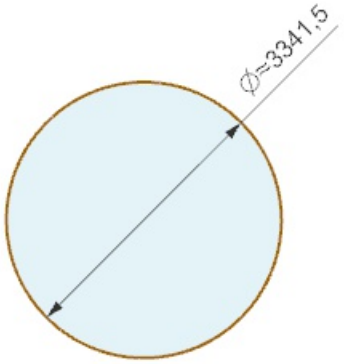

Figure 2-54 *The diametral dimension applied to a circle*

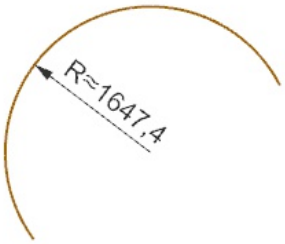

Figure 2-55 *The radial dimension applied to an arc*

Applying Angular Dimensions

Ribbon:	Home > Solve > Dimensions drop-down > Angular Dimension
Menu:	Insert > Dimensions > Angular

The **Angular Dimension** tool is used to apply angular dimension between entities. Whenever an angular dimension is applied using the **Angular Dimension** tool, the angle is always measured in the counterclockwise direction.

To apply angular dimension, choose the **Angular Dimension** tool from the **Dimensions** drop-down of the **Solve** group of the **Home** tab, refer to Figure 2-50; the **Angular Dimension** dialog box will be displayed and you will be prompted to select an object to be dimensioned. Select the entities between which the angular dimension needs to be applied and then place the dimension. Figure 2-56 shows different types of angular dimensions applied to a sketch. Rest of the options in the **Angular Dimension** dialog box are same as discussed earlier.

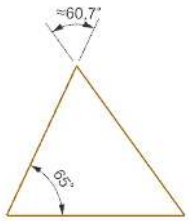

Figure 2-56 *Angular dimensions applied between the entities*

LIMITING EDITABLE CURVES TO A REGION OF A SKETCH

New

Ribbon:	Home > Solve > Options drop-down > Work Region
Menu:	Tools > Sketch> Work Region

The **Work Region** tool is used to limit editable curves to a region of a sketch. Once you define the editable region, curves outside that region will not move and cannot be edited. This tool is very helpful while editing large complex drawings where you just want to make changes to a particular area and do not want to mess with the surrounding entities. Also, using this tool, you can lock the final parts of the sketch, so that it does not get changed accidently.

Evaluation Copy. Do not reproduce. For information visit www.cadcim.com

The **Work Region** tool is available in the **Options** drop-down of the **Solve** group of the **Home** tab in the sketching environment. Choose this tool; the **Work Region** dialog box will be displayed, refer to Figure 2-57.

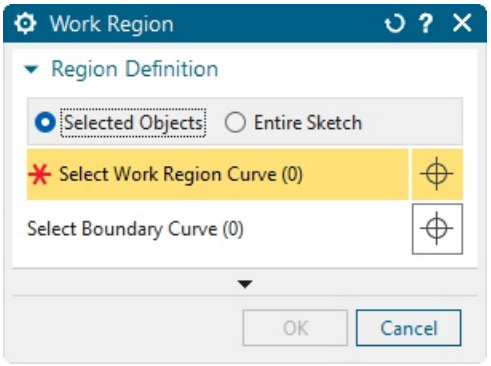

Figure 2-57 *The* ***Work Region*** *dialog box*

The option in this dialog box are discussed next.

Region Definition Rollout

The **Selected Objects** radio button is chosen by default in this rollout. Select the entities that you want to include in the work region and then choose the **OK** button to exit the dialog box. On doing so, selected entities will be displayed in black and rest of the entities will fade away. You can edit the entities within the defined work region but you wont be able to make any changes to the entities that are not a part of the defined work region.

You can choose the **Entire Sketch** radio button and then the **OK** button from the **Work Region** dialog box to clear any previous work region that you have defined in the sketch.

EXITING THE SKETCH ENVIRONMENT

Ribbon: Home > Sketch > Finish



After drawing the sketch, you need to exit the sketching environment to convert the sketch into a feature. To exit the sketching environment, choose the **Finish** tool from the **Sketch** group of the **Home** tab in the **Ribbon**. Alternatively, right-click in the drawing area and choose the **Finish Sketch** option from the shortcut menu. When you exit the sketching environment, you can convert the sketch into a solid model by using the solid modeling tools.

CREATING BASE FEATURES BY EXTRUDING

Ribbon: Home > Base > Extrude
Menu: Insert > Design Feature > Extrude



Extrusion is defined as the process of creating a feature from a sketch by adding the material along the direction normal to the sketch or any other specified direction. Figure 2-58 shows the isometric view of a closed sketch and Figure 2-59 shows the extruded feature created using this sketch.

Evaluation Copy. Do not reproduce. For information visit www.cadcim.com

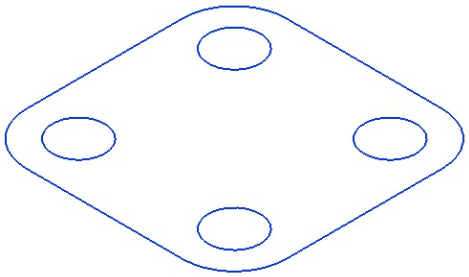

Figure 2-58 *Sketch for the extrude feature*

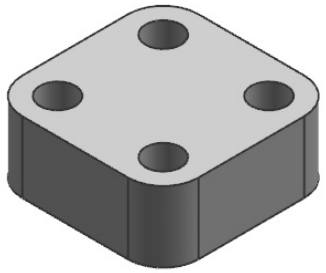

Figure 2-59 *Resulting extruded feature*

When you choose the **Extrude** tool from the **Base** group of the **Home** tab; the **Extrude** dialog box will be displayed, refer to Figure 2-60. Also, you will be prompted to select the planar face to sketch or the section geometry to be extruded. If you select the sketch at this stage, the preview of the extruded feature created using the default values will be displayed on the screen. Choose the **OK** button to create the extruded feature and exit the dialog box. The options available in the **Extrude** dialog box are discussed in detail in Chapter 4.

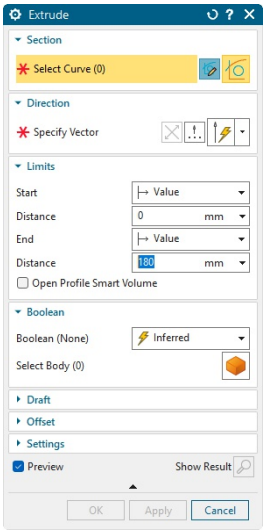

Figure 2-60 *The **Extrude** dialog box*

INVOKING THE DRAFTING ENVIRONMENT IN THE CURRENT PART FILE

To invoke the Drafting environment in the current part file, open the part file and choose the **Drafting** tool from the **Document** group in the **Application** tab of the **Ribbon**. On doing so, the Drafting environment along with the **Sheet** dialog box will be displayed, refer to Figure 2-61. Note that at this stage some of the tools of the Drafting environment will not be active. These tools will become active only after generating the first drawing view. You need to set the required parameters in the **Sheet** dialog box before generating and dimensioning the drawing views. These parameters will then be used to generate and dimension the drawing views. Also, you can modify the defined parameters after generating and dimensioning the drawing views. The Drafting environment of NX is discussed in detail in Chapter 12.

Evaluation Copy. Do not reproduce. For information visit www.cadcim.com

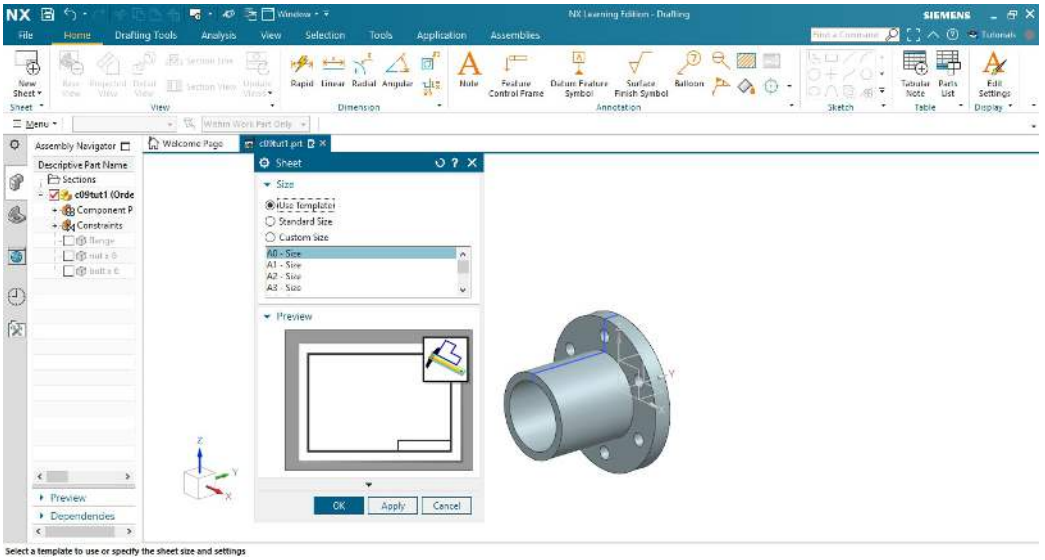

Figure 2-61 *The Drafting environment window of NX with the* ***Sheet*** *dialog box displayed*

TUTORIALS

As mentioned in the introduction, NX is parametric in nature. Therefore, you can draw a sketch of any dimensions and then modify its size by changing the values of dimensions. However, in this chapter, you will use the dynamic input boxes to draw the sketch of exact dimensions. This will help you improve your sketching skills.

Tutorial 1

In this tutorial, you will draw the sketch for the base feature of the model shown in Figure 2-62. The sketch to be drawn is shown in Figure 2-63. After drawing the sketch, you will extrude it by 25 units and then generate a drawing with the orthographic and isometric views of the model.

(Expected time: 30 min)

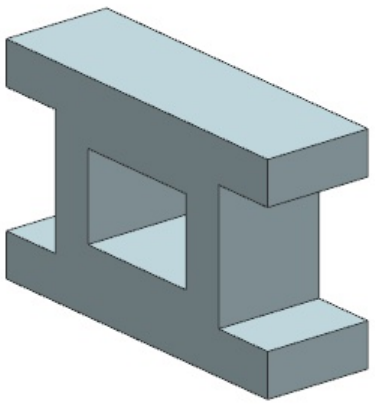

Figure 2-62 *Model for Tutorial 1*

Evaluation Copy. Do not reproduce. For information visit www.cadcim.com

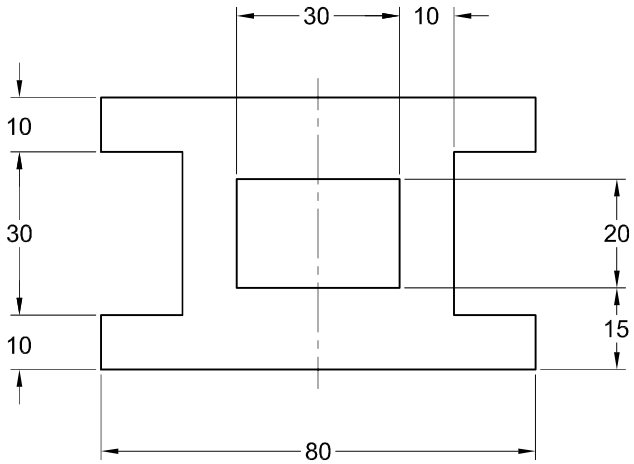

Figure 2-63 *Sketch for Tutorial 1*

The following steps are required to complete this tutorial:

a. Start a new file.
b. Select the XC-ZC (Front) plane as the sketching plane.
c. Draw the sketch of the model by using the **Profile** and **Rectangle** tools.
d. Finish the sketch and save the file.

Starting NX and Opening a New File

First, you need to start NX and then open a new file.

1. Double-click on NX shortcut icon on the desktop of your computer to start NX.

2. Choose the **New** button from the **Standard** group of the **Home** tab or choose **Menu > File > New** from the **Top Border Bar**; the **New** dialog box is displayed.



3. Select the **Model** template from the **Templates** rollout.

4. Enter **c02tut1** as the name of the document in the **Name** text box of the dialog box.

5. Choose the button on the right of the **Folder** text box; the **Choose Directory** dialog box is displayed.



It is recommended that you create a folder with the name NX in the hard drive of your computer and then create separate folders for each chapter inside it for saving the tutorial files of this textbook.

6. In this dialog box, browse to *NX /c02* folder and then choose the **OK** button twice; a new file is started in the Modeling environment.

Evaluation Copy. Do not reproduce. For information visit www.cadcim.com

Drawing the Sketch in the Sketching Environment

The base sketch of this model will be created on the XC-ZC plane.

1. Choose the **Sketch** tool from the **Construction** group of the **Home** tab; the **Create Sketch** dialog box is displayed.



2. Select the XC-ZC (Front) plane from the Datum Coordinate system in the drawing window if it is not selected by default.

3. Choose the **OK** button from the **Create Sketch** dialog box; the sketching tools become available and the sketching plane is oriented parallel to the screen.

Drawing the Outer Profile of the Sketch

The outer profile of the sketch consists of lines and it can be drawn by using the **Profile** tool.

1. Choose the **Profile** tool from the **Curve** group of the **Home** tab in the **Ribbon**, ; the **Profile** dialog box is displayed. By default, the **Line** button is active in this dialog box and the dynamic input boxes are displayed below the line cursor.



2. Move the cursor close to the origin; the coordinates of the point are displayed as **0**,**0** in the dynamic input boxes. Click to specify the start point of the line at this point.

   As you move the cursor on the screen, the line stretches and its length and angle values are modified dynamically in the dynamic input boxes.

3. Enter **80** in the **Length** dynamic input box and press the Tab key. Next, enter **0** in the **Angle** dynamic input box and press the Enter key.

4. Choose the **Fit** tool from the **Operation** group of the **View** tab to fit the sketch into the drawing window.

5. Move the cursor away from the end point of the last line and then enter **10** as the length and **90** as the angle in the **Length** and **Angle** dynamic input boxes, respectively. Next, press the Enter key.

6. Enter **15** as the length and **180** as the angle in the **Length** and **Angle** dynamic input boxes, respectively. Next, press the Enter key.

7. Enter **30** as the length and **90** as the angle in the **Length** and **Angle** dynamic input boxes, respectively. Next, press the Enter key.

8. Enter **15** as the length and **0** as the angle in the **Length** and **Angle** dynamic input boxes, respectively. Next, press the Enter key.

9. Enter **10** as the length and **90** as the angle in the **Length** and **Angle** dynamic input boxes, respectively. Next, press the Enter key.

Evaluation Copy. Do not reproduce. For information visit www.cadcim.com

10. Enter **80** as the length and **180** as the angle in the **Length** and **Angle** dynamic input boxes, respectively. Next, press the Enter key.

11. Enter **10** as the length and **-90** or **270** as the angle in the **Length** and **Angle** dynamic input boxes, respectively. Next, press the Enter key.

12. Enter **15** as the length and **0** as the angle in the **Length** and **Angle** dynamic input boxes, respectively. Next, press the Enter key.

13. Enter **30** as the length and **-90** or **270** as the angle in the **Length** and **Angle** dynamic input boxes, respectively. Next, press the Enter key.

14. Enter **15** as the length and **180** as the angle in the **Length** and **Angle** dynamic input boxes, respectively. Next, press the Enter key.

15. Enter **10** as the length and **-90** or **270** as the angle in the **Length** and **Angle** dynamic input boxes, respectively. Next, press the Enter key.

16. Press the Esc key twice to exit the **Profile** tool. The outer profile of the sketch is shown in Figure 2-64.

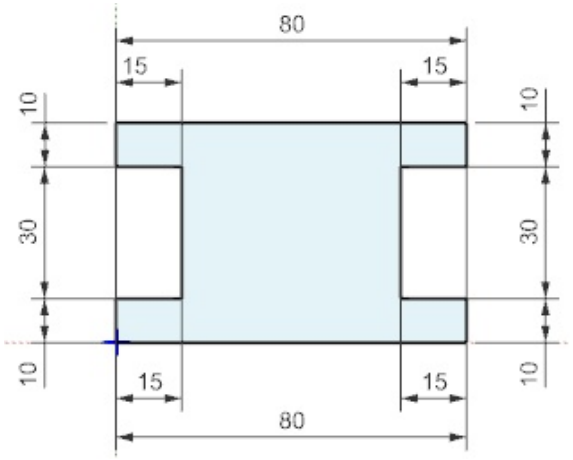

Figure 2-64 *Outer profile of the sketch*

Drawing the Rectangle

Next, you need to draw the inner profile which is a rectangle. You can use the **By 2 Points** option of the **Rectangle** tool to draw the rectangle.

1. Choose the **Rectangle** tool from the **Curve** group; the **Rectangle** dialog box is displayed and the **By 2 Points** button is chosen by default in this dialog box.

2. Enter **25** and **15** as the coordinates of the first point of the rectangle in the **XC** and **YC** dynamic input boxes, respectively. Next, press the Enter key.

3. Enter **30** and **20** as the width and height of the rectangle in the **Width** and **Height** dynamic input boxes, respectively. Next, press the Enter key; a preview of the rectangle is displayed.

Evaluation Copy. Do not reproduce. For information visit www.cadcim.com

As you move the cursor in the drawing window, the preview also moves.

4. Move the cursor close to the top right corner of the drawing window and then click to draw the rectangle.

5. Press the Esc key to exit the tool. The final sketch for Tutorial 1 is shown in Figure 2-65.

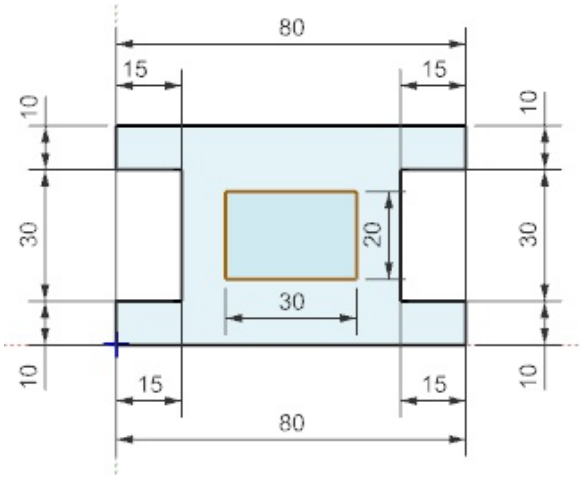

Figure 2-65 *Final sketch for Tutorial 1*

Extruding the Sketch

Next, you need to convert the sketch into base feature by using the **Extrude** tool.

1. Choose the **Finish** tool from the **Sketch** group to exit the sketching environment.

2. Right-click in the drawing area; a shortcut menu is displayed. Choose the **Fit** option from the shortcut menu to fit the sketch in the screen.

3. Invoke the **Extrude** tool from the **Base** group; the **Extrude** dialog box is displayed and you are prompted to select the planar face to sketch or select the section geometry. 

4. Select the sketch from the drawing window; the preview of the extruded feature is displayed. Also, the **End** dynamic input box is displayed in the drawing window.

5. Enter **25** in the **End** dynamic input box and press the Enter key; the preview is modified accordingly.

6. Choose the **OK** button in the **Extrude** dialog box; the extrude feature is created and displayed in the drawing window.

7. Press the Ctrl+B keys; the **Class Selection** dialog box is displayed. Select the sketch of the extruded feature to hide it. Next, choose the **OK** button from the dialog box. Figure 2-66 shows the extruded feature after hiding its sketch.

Evaluation Copy. Do not reproduce. For information visit www.cadcim.com

Genarating Drawing Views of the Model

Next, you need to generate the drawing views of the model in the Drafting environment.

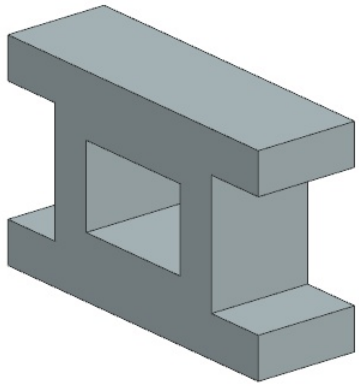

Figure 2-66 *Extruded model for Tutorial 1*

1. Choose **Application > Document > Drafting** from the **Ribbon**; the **Sheet** dialog box is displayed. Select the **Standard Size** radio button from the **Size** rollout.

2. Select the sheet size **A2 - 420 x 594** from the **Size** drop-down list. By default, the **3rd Angle Projection** button is chosen and the **Millimeters** radio button is selected in the **Settings** rollout. The default scale value selected in the **Scale** drop-down list is **1:1**. Select the **Base View Command** radio button from the **Settings** rollout, if it is not selected by default. Accept default values for all other parameters and choose the **OK** button to invoke the Drafting environment.

Now, you are in the Drafting environment and an empty drawing sheet along with the floating top view attached to the cursor is displayed. Also, the **Base View** dialog box is displayed.

3. In the **Base View** dialog box, choose the **Front** option from the **Model View to Use** drop-down list of the **Model View** rollout. Next, specify the center point for the generated drawing view. After generating the base view, the **Projected View** tool is automatically invoked from the **View** group and the **Projected View** dialog box is displayed.

4. Click on the top side of the base view and then at the right side of the base view to generate the top view and the right-side view, respectively. Press the middle mouse button to exit the tool.

5. Choose the **Base View** tool from the **View** panel of the **Home** tab; the **Base View** dialog box is displayed. Next choose the **Trimetric** option from the **Model View to Use** drop-down list of the **Model View** rollout; the floating trimetric view gets attached to the cursor. Click to place this view on right of top view placed earlier. The resulting drawing sheet after generating the drawing views is shown in Figure 2-67.

Evaluation Copy. Do not reproduce. For information visit www.cadcim.com

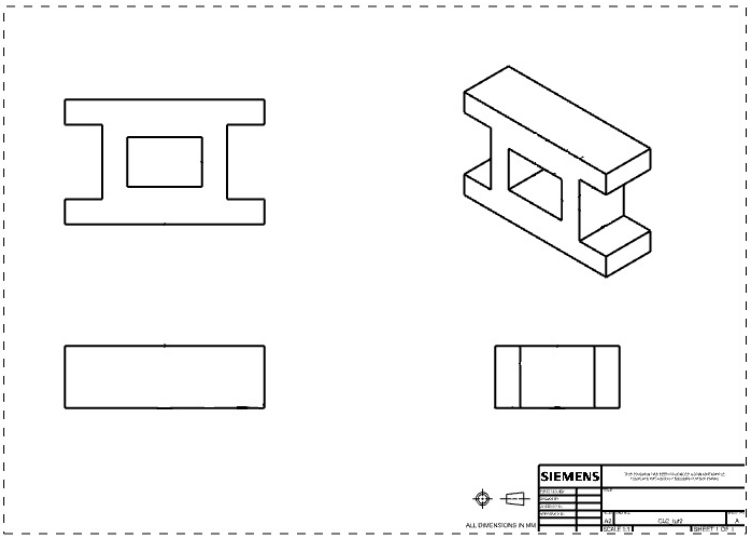

Figure 2-67 *The drawing sheet after creating the drawing views*

6. Choose **Menu** > **File** > **Save** from the **Top Border Bar**; the drawing file is saved. Next, close the file.

Tutorial 2

In this tutorial, you will draw the sketch for the base feature of the model shown in Figure 2-68. The sketch to be drawn is shown in Figure 2-69. After drawing the sketch, you will extrude it by 15 units and then generate a drawing with the orthographic and isometric views of the model.

(Expected time: 30 min)

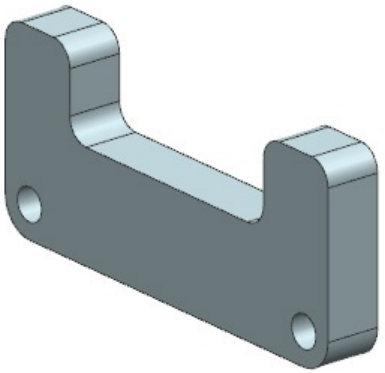

Figure 2-68 *Model for Tutorial 2*

Evaluation Copy. Do not reproduce. For information visit www.cadcim.com

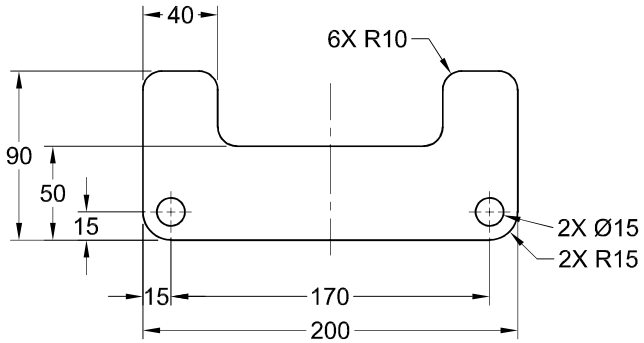

Figure 2-69 *Sketch for Tutorial 2*

The following steps are required to complete this tutorial:

a. Start a new file.
b. Draw the sketch by using the XC-ZC (Front) plane as the sketching plane.
c. Draw the outer loop of the profile by using the **Profile** tool.
d. Fillet the sharp corners of the outer loop by using the **Fillet** tool.
e. Draw circles by using the centers of fillets to complete the profile.
f. Finish the sketch and save the file.

Starting NX and Opening a New File

First, you need to start NX and then start a new file.

1. Double-click on NX shortcut icon on the desktop of your computer to start NX.

2. Choose the **New** button from the **Standard** group of the **Home** tab or choose **Menu > File > New** from the **Top Border Bar**; the **New** dialog box is displayed.

3. Select the **Model** template from the **Templates** rollout.

4. Enter **c02tut2** as the name of the document in the **Name** text box of the dialog box.

5. Choose the button on the right side of the **Folder** text box; the **Choose Directory** dialog box is displayed.

6. In this dialog box, browse to *NX/c02* folder and then choose the **OK** button twice; the new file is started in the Modeling environment.

Drawing the Sketch in the Sketching Environment

The base sketch of this model will be created on the XC-ZC (Front) plane.

1. Choose the **Sketch** tool from the **Construction** group of the **Home** tab; the **Create Sketch** dialog box is displayed.

Evaluation Copy. Do not reproduce. For information visit www.cadcim.com

2. Select the XC-ZC (Front) plane from the Datum Coordinate system in the drawing window if it is not selected by default.

3. Choose the **OK** button from the **Create Sketch** dialog box; the sketching tools become available and the sketching plane is oriented parallel to the screen.

Drawing Lines of the Outer Loop

You will draw the lines of the outer loop by using the line mode of the **Profile** tool. The line will start from the origin. In the current view, the origin is the intersection point of the two planes displayed as the horizontal and vertical lines.

1. Choose the **Profile** tool from the **Curve** group of the **Home** tab in the **Ribbon**; the **Profile** dialog box is displayed. By default, the **Line** button is active in this dialog box and the dynamic input boxes are displayed below the line cursor.



2. Move the cursor close to the origin; the coordinates of the point are displayed as 0,0 in the dynamic input boxes. Next, click to specify the start point of the line.

   The point you specified is selected as the start point of the line and the endpoint is attached to the cursor. As you move the cursor on the screen, the line stretches and its length and angle values are modified dynamically in the dynamic input boxes. Next, you need to specify the endpoint of this line as well as the points to define the remaining lines. This can be done by using the **Length** and **Angle** dynamic input boxes.

3. Enter **200** in the **Length** dynamic input box and press the Tab key. Next, enter **0** in the **Angle** dynamic input box and press the Enter key.

4. Choose the **Fit** tool from the **View** tab to fit the sketch into the drawing window. Since the **Profile** tool is still active, therefore you are prompted to specify the second point of the line.

5. Enter **90** in the **Length** dynamic input box and press the Tab key. Next, enter **90** in the **Angle** dynamic input box and press the Enter key; a vertical line of 90 mm is drawn.

6. Choose the **Fit** tool again to fit the drawing into the current display.

7. Move the cursor away from the end point of the last line and then enter **40** in the **Length** dynamic input box and press the Tab key. Next, enter **-180** in the **Angle** dynamic input box and press the Enter key; a horizontal line of 40 mm is drawn.

8. Move the cursor away from the end point of the last line and then enter **40** in the **Length** dynamic input box and press the Tab key. Next, enter **-90** in the **Angle** dynamic input box and press the Enter key; a vertical line of 40 mm is drawn downward.

9. Move the cursor away from the end point of the last line and then enter **120** in the **Length** dynamic input box and press the Tab key. Next, enter **180** in the **Angle** dynamic input box and press the Enter key; a horizontal line of 120 mm is drawn.

Evaluation Copy. Do not reproduce. For information visit www.cadcim.com

10. Move the cursor vertically upward until the horizontal help line is displayed from the top endpoint of the vertical line of 40 mm. Note that at this point, the value of the length in the **Length** dynamic input box is 40 and the value of the angle is 90. Click to specify the endpoint of this line.

11. Move the cursor horizontally toward the left. Enter **40** in the **Length** dynamic input box and press the Tab key. Next, enter **180** in the **Angle** dynamic input box and press the Enter key; a horizontal line of 40 mm is drawn.

12. Move the cursor vertically downward to the origin. If the first line is not highlighted in yellow, move the cursor over it once and then move it back to the origin; the cursor snaps to the endpoint of the first line.

13. Click to specify the endpoint of the line when the vertical constraint symbol is displayed. Choose the **Fit** tool to fit the sketch into the drawing window.

14. Press the Esc key twice to exit the **Profile** tool. The sketch after drawing the lines is shown in Figure 2-70.

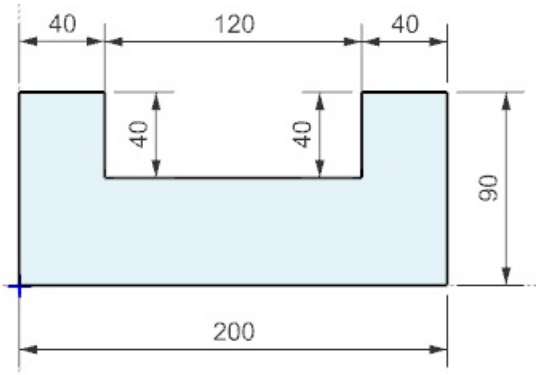

Figure 2-70 *Sketch after drawing the lines*

Filleting Sharp Corners

In this section, you need to fillet sharp corners by using the **Fillet** tool so that there are no sharp edges in the final model.

1. Choose the **Fillet** tool from the **Curve** group of the **Home** tab; the **Fillet** dialog box is displayed.



In this tutorial, the lower left and lower right corners are filleted with a radius of 15 mm and the remaining corners are filleted with a radius of 10 mm.

2. Enter **15** in the **Radius** dynamic input box and press the Enter key.

3. Move the cursor over the lower left corner of the sketch; the two lines comprising this corner are highlighted in yellow. Click to select this corner; a fillet is created at the lower left corner.

Evaluation Copy. Do not reproduce. For information visit www.cadcim.com

4. Similarly, move the cursor over the lower right corner and click on it when the two lines that form this corner are highlighted in yellow.

Next, you need to modify the fillet radius value and fillet the remaining corners.

5. Enter **10** in the **Radius** dynamic input box and press the Enter key.

6. Select the remaining corners of the sketch one by one and fillet them with a radius of 10.

7. Right-click and then choose the **OK** option from the shortcut menu to exit the **Fillet** tool. The fillets are created, refer to Figure 2-71.

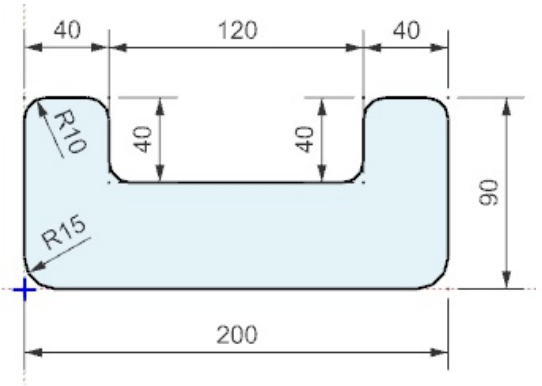

Figure 2-71 *Sketch after creating fillets*

Drawing Circles

Finally, you need to draw circles to complete the sketch. The circles will be drawn by using the **Circle** tool. Use the center points of the fillets as the center points of the circles.

1. Choose the **Circle** tool from the **Curve** group of the **Home** tab; the **Circle** dialog box is displayed. By default, the **Circle by Center and Diameter** button is chosen in this dialog box. Also, you are prompted to select the center of the circle.

2. Move the cursor toward the center point of the lower left fillet; the cursor snaps to the center point of the arc. Also, the center point snap symbol is displayed above the dynamic input boxes.

3. Click when the cursor snaps to the center point of the fillet to specify the center point of the circle.

4. Enter **15** in the **Diameter** dynamic input box and press the Enter key; a circle of the specified diameter is drawn at the specified center point. Also, another circle of **15** diameter is attached to the cursor.

5. Move the cursor toward the center point of the lower right fillet; the cursor snaps to the center point of the arc and the center point snap symbol is displayed above the dynamic input box.

6. Click when the cursor snaps to the center point of the arc; the circle is drawn at the specified location.

Note

If by mistake you select an incorrect point as the center point of the circle, you can remove the unwanted circle by choosing the ***Undo*** *button from the* ***Quick Access*** *toolbar.*

Evaluation Copy. Do not reproduce. For information visit www.cadcim.com

7. Exit the **Circle** tool by pressing the Esc key twice.

This completes the sketch of the model for Tutorial 2. The final sketch for Tutorial 2 is shown in Figure 2-72.

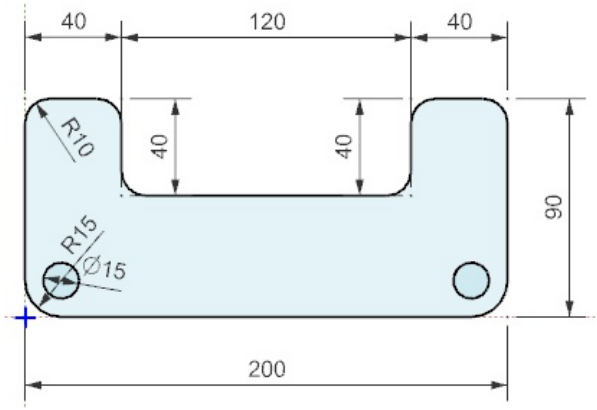

Figure 2-72 *Final sketch for Tutorial 2*

Extruding the Sketch

Next, you need to convert the sketch into base feature by using the **Extrude** tool.

1. Choose the **Finish** tool from the **Sketch** group to exit the sketching environment.

2. Right-click in the drawing area; a shortcut menu is displayed. Choose the **Fit** option from the shortcut menu to fit the sketch in the screen.

3. Invoke the **Extrude** tool from the **Base** group; the **Extrude** dialog box is displayed and you are prompted to select the planar face to sketch or select the section geometry. 

4. Select the sketch from the drawing window; the preview of the extruded feature is displayed. Also, the **End** dynamic input box is displayed in the drawing window.

5. Enter **15** in the **End** dynamic input box and press the Enter key; the preview is modified accordingly.

6. Choose the **OK** button in the **Extrude** dialog box; the extrude feature is created and displayed in the drawing window.

7. Press the Ctrl+B keys; the **Class Selection** dialog box is displayed. Select the sketch of the extruded feature to hide it. Next, choose the **OK** button from the dialog box. Figure 2-73 shows the extruded feature after hiding its sketch.

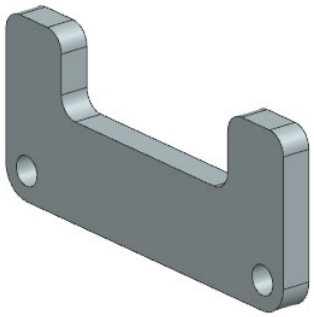

Figure 2-73 *Extruded model for Tutorial 2*

Evaluation Copy. Do not reproduce. For information visit www.cadcim.com

Genarating Drawing Views of the Model

Next, you need to generate the drawing views of the model in the Drafting environment.

1. Choose **Application > Document > Drafting** from the **Ribbon**; the **Sheet** dialog box is displayed. Select the **Standard Size** radio button from the **Size** rollout.

2. Select the sheet size **A2 - 420 x 594** from the **Size** drop-down list. By default, the **3rd Angle Projection** button is chosen and the **Millimeters** radio button is selected in the **Settings** rollout. The default scale value selected in the **Scale** drop-down list is **1:1**. Select the **Base View Command** radio button from the **Settings** rollout, if it is not selected by default. Accept default values for all other parameters and choose the **OK** button to invoke the Drafting environment.

   Now, you are in the Drafting environment and an empty drawing sheet along with the floating top view attached to the cursor is displayed. Also, the **Base View** dialog box is displayed.

3. In the **Base View** dialog box, choose the **Front** option from the **Model View to Use** drop-down list of the **Model View** rollout. Next, specify the center point for the generated drawing view. After generating the base view, the **Projected View** tool is automatically invoked from the **View** group and the **Projected View** dialog box is displayed.

4. Click on the top side of the base view and then at the right side of the base view to generate the top view and the right-side view, respectively. Press the middle mouse button to exit the tool.

5. Choose the **Base View** tool from the **View** panel of the **Home** tab; the **Base View** dialog box is displayed. Next choose the **Trimetric** option from the **Model View to Use** drop-down list of the **Model View** rollout; the floating trimetric view gets attached to the cursor. Click to place this view on right of top view placed earlier. The resulting drawing sheet after generating the drawing views is shown in Figure 2-74.

Evaluation Copy. Do not reproduce. For information visit www.cadcim.com

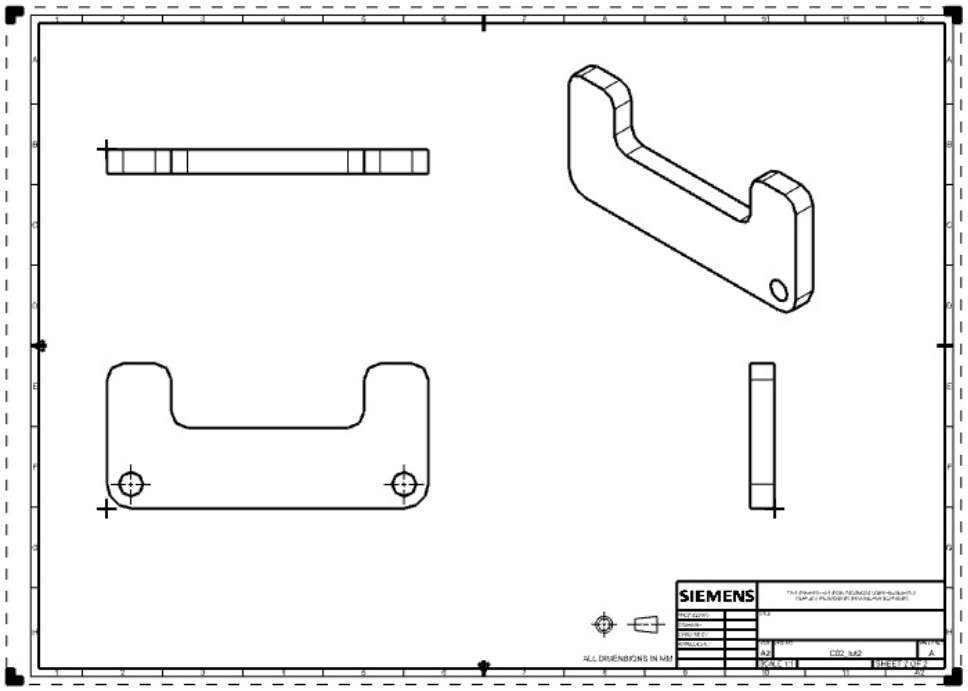

Figure 2-74 *The drawing sheet after creating the drawing views*

. Choose **Menu > File > Save** from the **Top Border Bar**; the drawing file is saved. Next, close the file.

Tutorial 3

In this tutorial, you will draw the sketch for the base feature of the model shown in Figure 2-75. The sketch to be drawn is shown in Figure 2-76. After drawing the sketch, you will extrude it by 40 units and then generate a drawing with the orthographic and isometric views of the model.

(Expected time: 30 min)

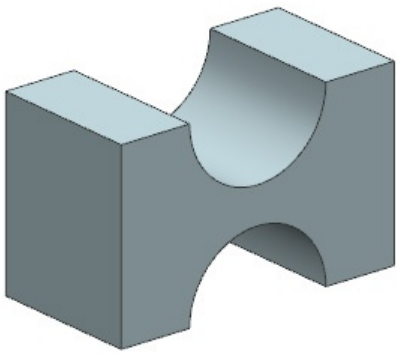

Figure 2-75 *Model for Tutorial 3*

Evaluation Copy. Do not reproduce. For information visit www.cadcim.com

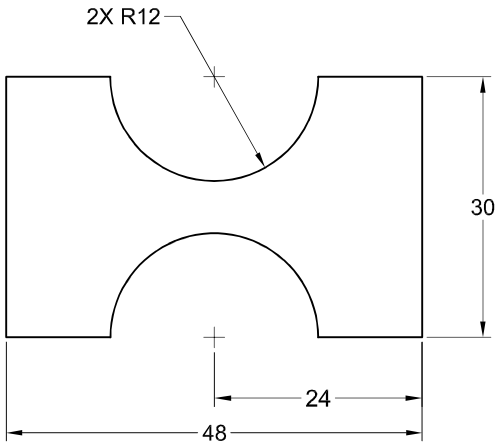

Figure 2-76 *Sketch for Tutorial 3*

The following steps are required to complete this tutorial:

a. Start a new file.
b. Select the YC-ZC (Right) plane as the sketching plane.
c. Draw the sketch of the model by using the **Profile** tool.
d. Finish the sketch and save the file.

Starting a New File

If you continue working after completing Tutorial 2, you do not need to open a new session of NX. You can start a new part file by selecting the **Model** template from the **New** dialog box.

1. Choose the **New** button from the **Standard** group of the **Home** tab or choose **Menu > File > New** from the **Top Border Bar**; the **New** dialog box is displayed.

2. Select the **Model** template from the **Templates** rollout.

3. Choose the button on the right of the **Name** text box; the **Choose New File Name** dialog box is displayed.

4. In this dialog box, browse to *NX/c02* and then enter **c02tut3** in the **File name** edit box. Next, choose the **OK** button twice; the new file is started in the Modeling environment.

Drawing the Sketch in the Sketching Environment

The base sketch of this model will be created on the YC-ZC (Right) plane. Therefore, you need to draw the sketch using this plane.

1. Choose the **Sketch** tool from the **Construction** group of the **Home** tab; the **Create Sketch** dialog box is displayed.

Evaluation Copy. Do not reproduce. For information visit www.cadcim.com

2. Select the YC-ZC (Right) plane from the drawing window.

3. Choose the **OK** button from the **Create Sketch** dialog box to start the sketch.

Drawing the Sketch

The sketch that you need to draw consists of multiple lines and two arcs. All these entities can be drawn by using the **Line** and **Arc** options of the **Profile** tool.

1. Choose the **Profile** tool from the **Curve** group; the **Profile** dialog box is displayed. In this dialog box, the **Line** button is activated by default. Also, the dynamic input boxes are displayed below the line cursor.

2. Move the cursor close to the origin; the coordinates of the point are displayed as 0,0 in the dynamic input boxes. Click to specify the start point of the line at this point.

   The point you specified is selected as the start point of the line and the endpoint is attached to the cursor. As you move the cursor on the screen, the line stretches and its length and angle values are modified dynamically in the dynamic input boxes.

   Next, you need to specify the endpoint of this line. Also, you need to specify the points to define the remaining lines of the sketch. This can be done by using the **Length** and **Angle** dynamic input boxes.

3. Enter **12** in the **Length** dynamic input box and press the Tab key. Next, enter **0** in the **Angle** dynamic input box and press the Enter key. The first line is drawn and a rubber-band line

   is displayed with the start point at the endpoint of the previous line and the endpoint attached to the cursor.

   Now, you need to invoke the arc mode because the next entity to be drawn is an arc.

4. Choose the **Arc** button from the **Object Type** area of the **Profile** dialog box to invoke the arc mode.

   A rubber-band arc is displayed with the start point fixed at the endpoint of the last line and the endpoint attached to the cursor. Also, the quadrant symbol is displayed at the start point of the arc.

5. Move the cursor to the start point of the arc and then move it vertically upward through a small distance. Next, move the cursor toward the right; you will notice that a normal arc starts from the endpoint of the last line.

6. Enter **12** in the **Radius** dynamic input box and press the Tab key. Next, enter **180** in the **Sweep Angle** dynamic input box and press the Enter key.

   A preview of the resulting arc is displayed, but the arc is still not drawn. To draw the arc, you need to specify a point on the screen with the values mentioned in the dynamic input boxes.

Evaluation Copy. Do not reproduce. For information visit www.cadcim.com

7. Move the cursor horizontally toward the right and click when the preview of the required arc is displayed. The arc is drawn and the line mode is invoked again.

8. Enter **12** as the length and **0** as the angle in the **Length** and **Angle** dynamic input boxes, respectively, and then press the Enter key. Choose the **Fit** tool from the **Operation** group of the **View** tab to fit the sketch into the drawing window.

9. Enter **30** as the length and **90** as the angle in the **Length** and **Angle** dynamic input boxes, respectively, and then press the Enter key.

10. Move the cursor horizontally toward the left. Make sure that the horizontal constraint symbol is displayed. Click to specify the endpoint of the line when the vertical help line is displayed from the endpoint of the arc.

    Next, you need to draw the arc by invoking the arc mode.

11. Choose the **Arc** button from the **Profile** dialog box to invoke the arc mode; a rubber-band arc is displayed with its start point fixed at the endpoint of the last line.

12. Move the cursor to the start point of the arc and then move it vertically downward through a small distance. When the normal arc appears, move the cursor toward the left.

13. Move the cursor over the lower arc once and then move it toward the left, refer to Figure 2-77.

    A horizontal help line is displayed originating from the center of the arc being drawn. At the point where the cursor is vertically in line with the start point of the lower arc, a vertical help line appears from the start point of the lower arc, refer to Figure 2-77.

14. Click to define the endpoint of the arc when the horizontal and vertical help lines are displayed. The arc is drawn and the line mode is invoked again.

15. Enter **12** as the radius and **180** as the angle in the **Length** and **Angle** dynamic input boxes, respectively, and then press the Enter key.

16. Move the cursor to the first line and then move it to the start point of this line; the cursor snaps to the start point of the line.

17. Click to define the endpoint of this line when the cursor snaps to the start point of the first line.

18. Press the Esc key twice to exit the **Profile** tool. The final sketch of the model is shown in Figure 2-78.

Evaluation Copy. Do not reproduce. For information visit www.cadcim.com

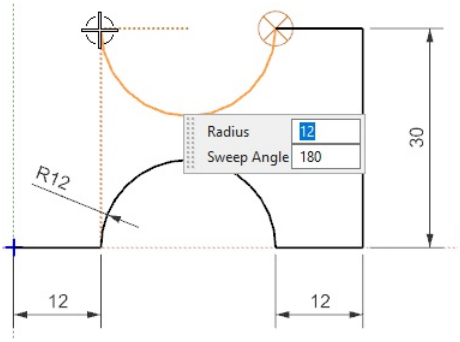

Figure 2-77 *Horizontal and vertical help lines displayed to define the endpoint of the arc*

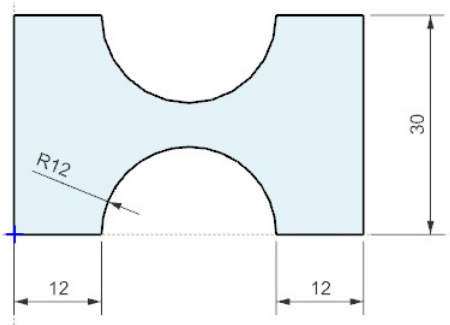

Figure 2-78 *Final sketch for Tutorial 3*

Extruding the Sketch

Next, you need to convert the sketch into base feature by using the **Extrude** tool.

1. Choose the **Finish** tool from the **Sketch** group to exit the sketching environment.

2. Right-click in the drawing area; a shortcut menu is displayed. Choose the **Fit** option from the shortcut menu to fit the sketch in the screen.

3. Invoke the **Extrude** tool from the **Base** group; the **Extrude** dialog box is displayed and you are prompted to select the planar face to sketch or select the section geometry. 

4. Select the sketch from the drawing window; the preview of the extruded feature is displayed. Also, the **End** dynamic input box is displayed in the drawing window.

5. Enter **15** in the **End** dynamic input box and press the Enter key; the preview is modified accordingly.

6. Choose the **OK** button in the **Extrude** dialog box; the extrude feature is created and displayed in the drawing window.

7. Press the Ctrl+B keys; the **Class Selection** dialog box is displayed. Select the sketch of the extruded feature to hide it. Next, choose the **OK** button from the dialog box. Figure 2-79 shows the extruded feature after hiding its sketch.

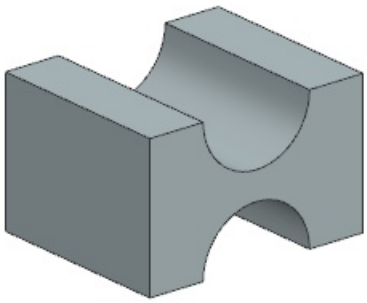

Figure 2-79 *Extruded model for Tutorial 3*

Genarating Drawing Views of the Model

Next, you need to generate the drawing views of the model in the Drafting environment.

1. Choose **Application > Document > Drafting** from the **Ribbon**; the **Sheet** dialog box is displayed. Select the **Standard Size** radio button from the **Size** rollout.

Evaluation Copy. Do not reproduce. For information visit www.cadcim.com

2. Select the sheet size **A2 - 420 x 594** from the **Size** drop-down list. By default, the **3rd Angle Projection** button is chosen and the **Millimeters** radio button is selected in the **Settings** rollout. The default scale value selected in the **Scale** drop-down list is **1:1**. Select the **Base View Command** radio button from the **Settings** rollout, if it is not selected by default. Accept default values for all other parameters and choose the **OK** button to invoke the Drafting environment.

   Now, you are in the Drafting environment and an empty drawing sheet along with the floating top view attached to the cursor is displayed. Also, the **Base View** dialog box is displayed.

3. In the **Base View** dialog box, choose the **Front** option from the **Model View to Use** drop-down list of the **Model View** rollout. Next, specify the center point for the generated drawing view. After generating the base view, the **Projected View** tool is automatically invoked from the **View** group and the **Projected View** dialog box is displayed.

4. Click on the top side of the base view and then at the right side of the base view to generate the top view and the right-side view, respectively. Press the middle mouse button to exit the tool.

5. Choose the **Base View** tool from the **View** panel of the **Home** tab; the **Base View** dialog box is displayed. Next choose the **Trimetric** option from the **Model View to Use** drop-down list of the **Model View** rollout; the floating trimetric view gets attached to the cursor. Click to place this view on right of top view placed earlier. The resulting drawing sheet after generating the drawing views is shown in Figure 2-80.

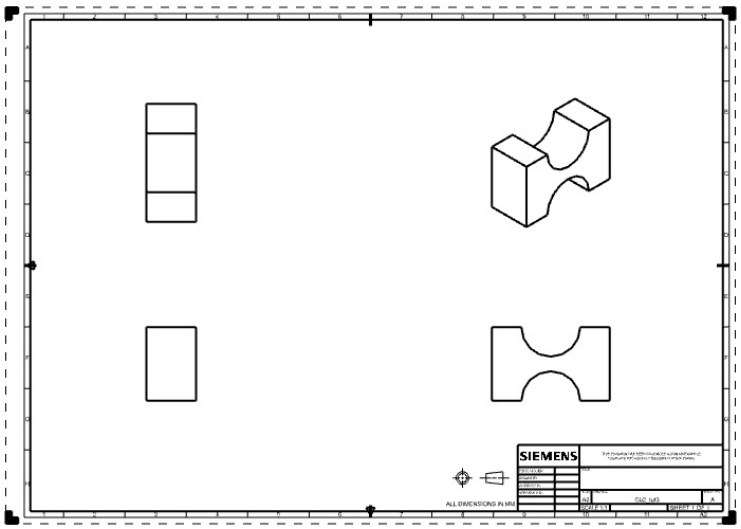

Figure 2-80 *The drawing sheet after creating the drawing views*

6. Choose **Menu > File > Save** from the **Top Border Bar**; the drawing file is saved. Next, close the file.

Evaluation Copy. Do not reproduce. For information visit www.cadcim.com

Self-Evaluation Test

Answer the following questions and then compare them to those given at the end of this chapter:

1. You can restore the original orientation of the sketching plane by using the _____ tool.

2. You can invoke the arc mode within the **Profile** tool by choosing the _____ button from the **Profile** dialog box.

3. You can fillet corners in a sketch by using the _____ tool.

4. You can draw an elliptical arc by using the _____ tool.

5. If you choose the _____ button from the **Rectangle** dialog box, it will enable you to draw a centerpoint rectangle.

6. You can exit the sketching environment by choosing the _____ tool from the **Sketch** group of the **Home** tab.

7. Most of the designs created in NX consist of sketch-based features and placed features. (T/F)

8. When you invoke the sketching environment from the **Construction** group, the **Profile** tool is invoked by default. (T/F)

9. You can use the dynamic input boxes to specify the exact values of the sketched entities. (T/F)

10. You need to choose the **Sketch** tool to invoke the Sketching environment. (T/F)

Review Questions

Answer the following questions:

1. Which of the following dialog boxes is displayed when you choose the **New** button from the **File** tab to start a new file?

   (a) **New Part File** (b) **New Item**
   (c) **New** (d) **Part File**

2. Which of the following tools in NX is used to create conics?

   (a) **General Conic** (b) **Conic**
   (c) **Round** (d) None

3. Which mode is automatically invoked from the **Profile** dialog box when you specify the start point of a line?

   (a) **Coordinate Mode** (b) **Angle Mode**
   (c) **Parameter Mode** (d) None

Evaluation Copy. Do not reproduce. For information visit www.cadcim.com

4. In NX, how many methods are used to start a new file?

(a) 1 (b) 2
(c) 3 (d) 5

5. Which of the following options is available in the **Studio Spline** dialog box along with the **By Poles** option to draw splines?

(a) **No Poles** (b) **From Poles**
(c) **From Points** (d) **Through Points**

6. The files in NX are saved with *.prt* extension. (T/F)

7. You can select entities by dragging a box around them. (T/F)

8. You can set the selection mode to select only the sketched entities. (T/F)

9. In NX, you can create fillets by simply dragging the cursor across the entities that you want to fillet. (T/F)

10. In NX, you cannot draw a rectangle from its center. (T/F)

EXERCISES

Exercise 1

In this exercise, you will draw the sketch for the base feature of the model shown in Figure 2-81. The sketch to be drawn is shown in Figure 2-82. After drawing the sketch, you will extrude it by 30 units and then generate a drawing with the orthographic and isometric views of the model.

(Expected time: 30 min)

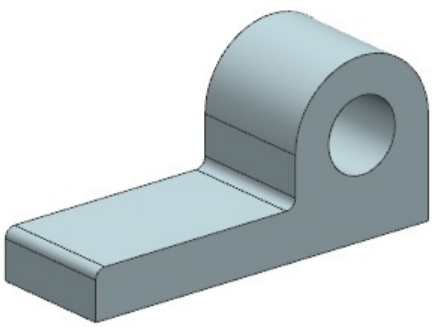

Figure 2-81 *Model for Exercise 1*

Evaluation Copy. Do not reproduce. For information visit www.cadcim.com

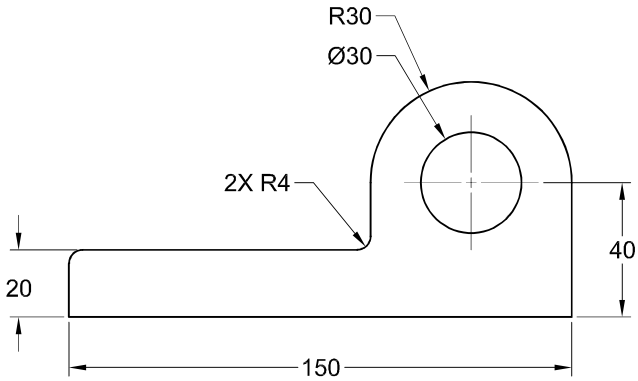

Figure 2-82 *Sketch for Exercise 1*

Exercise 2

In this exercise, you will draw the sketch for the base feature of the model shown in Figure 2-83. The sketch to be drawn is shown in Figure 2-84. After drawing the sketch, you will extrude it by 40 units and then generate a drawing with the orthographic and isometric views of the model.

(Expected time: 30 min)

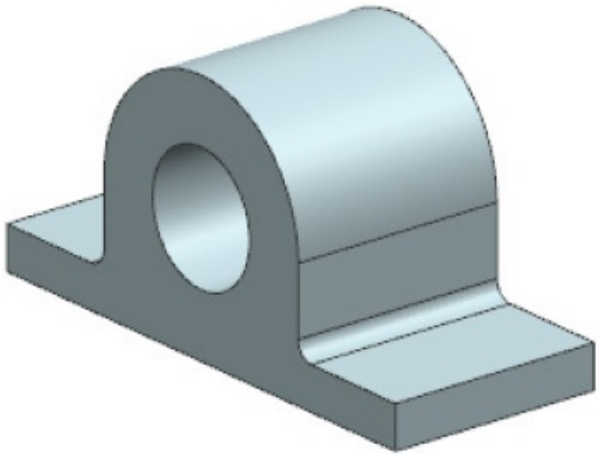

Figure 2-83 *Model for Exercise 2*

Evaluation Copy. Do not reproduce. For information visit www.cadcim.com

Evaluation Copy. Do not reproduce. For information visit www.cadcim.com

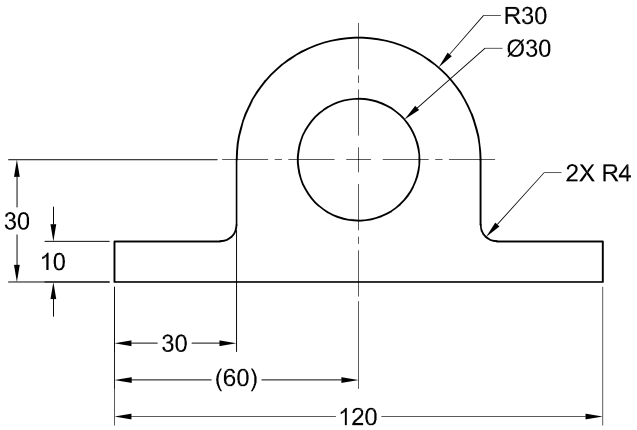

Figure 2-84 *Sketch for Exercise 2*

Answers to Self-Evaluation Test

1. Orient View to Sketch, **2. Arc**, **3. Fillet**, **4. Ellipse**, **5. From Center**, **6. Finish**, **7.** T, **8.** T, **9.** T, **10.** T