Chapter 17

Miscellaneous Tools



Learning Objectives

After completing this chapter, you will be able to:

- *Find the Center of Gravity of a model*
- *Extract an iFeature*
- *Insert an iFeature*
- *Create an iMate*
- *Understand the use of iProperties*
- *Create user-defined drawing sheets*
- *Import AutoCAD blocks into Inventor*

INTRODUCTION

In this chapter, you will learn about some of the tools that help in enhancing your working efficiency while creating a part.

COPYING THE SKETCHES

Ribbon: Sketch > Modify > Copy



The **Copy** tool is available in the sketching environment and allows you to copy the sketched entities from one location to the other. Note that if dimensions are also selected along with the entities to be copied, then the selected dimensions will also be copied along with the sketched entities. To copy the sketched entities, invoke the **Copy** tool from the **Modify** panel of the **Sketch** tab; the **Copy** dialog box will be displayed, as shown in Figure 17-1. The options in this dialog box are discussed next.

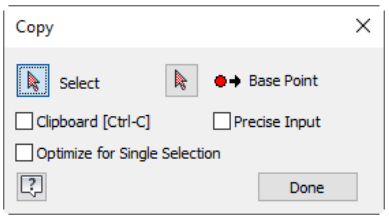

Figure 17-1 *The* ***Copy*** *dialog box*

Select

This button is used to select the entities to be copied. On invoking the **Copy** tool, this button is automatically chosen and you are prompted to select the geometry to copy. You can select individual entities using the mouse button or select more than one entity using the Window or Crossing options.

Base Point

This button is chosen to specify the point that will act as the base point for moving the copied entities. Once you have selected all the entities to be copied, choose this button to select the point from where the movement will start.

Clipboard [Ctrl-C]

This check box, if selected, temporarily saves the selected geometry or the clipboard so that after choosing the **Done** button, you can paste the selected geometry by pressing CTRL+V keys from the keyboard.

Precise Input

This check box, if selected, allows you to specify the coordinates for the base point and the destination point using the **Inventor Precise Input** toolbar.

Optimize for Single Selection

If this check box is selected, the **Base Point** button will be activated automatically after making a single selection or the window selection of geometry. But if you clear this check box, you can make multiple geometry selections before choosing the **Base Point** button.

After selecting the geometry and the base point, you will be prompted to specify the endpoint for copy. Specify the end point in the graphics window; the copied geometry will be pasted. You will notice the **Copy** tool is still active. If you need multiple copies, specify more endpoints, else right-click and choose **Cancel(ESC)**.

SCALING THE SKETCHES

Ribbon: Sketch > Modify > Scale

Scale The **Scale** tool is available in the sketching environment and is used to resize the sketched entities with respect to the specified base point. On invoking this tool, the **Scale** dialog box will be displayed, as shown in Figure 17-2. Most of the options in this dialog box are similar to those discussed in the **Move** dialog box in Chapter 4.

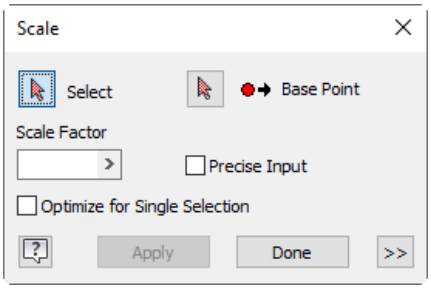

Figure 17-2 *The* ***Scale*** *dialog box*

Select the sketched entities to be scaled then choose the **Base Point** button; you will be prompted to select the base point. Select a base point; the **Scale Factor** edit box will be highlighted. As you move the cursor in the graphics window, the entities will be resized with respect to the cursor position and the value in the **Scale Factor** edit box will change dynamically. You can also enter the required value manually in the **Scale Factor** edit box to resize the entities. Alternatively, you can specify the coordinates of the base point by using the **Inventor Precise Input** toolbar. To do so, select the **Precise Input** check box in the **Scale** dialog box; the **Inventor Precise Input** toolbar will be displayed. Specify the coordinates to locate the base point.

FINDING THE CENTER OF GRAVITY

Ribbon: View > Visibility > Center of Gravity

Center of Gravity This tool allows you to find the Center of Gravity (COG) of a model or an assembly. To find the center of gravity, choose the **Center of Gravity** tool from the **Visibility** panel of the **View** tab; the **Autodesk Inventor Professional** message box will be displayed, as shown in Figure 17-3.

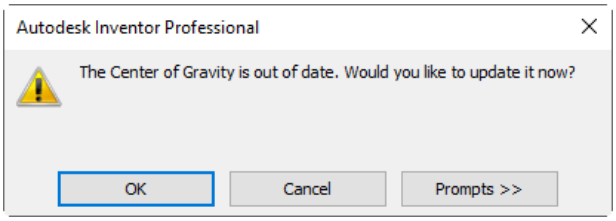

Figure 17-3 *The* ***Autodesk Inventor Professional*** *message box*

Choose the **OK** button from the dialog box; the Center of Gravity triad will be displayed, as shown in the Figure 17-4. The red arrow indicates the X-axis, the green arrow indicates the Y-axis, the blue arrow indicates the Z-axis, and the yellow sphere indicates the location of the Center of Gravity of the selected component. This triad also includes three selectable work planes and a selectable work point at the origin of COG.

You can use the COG symbol as a virtual reference in the designing process. The triad can be used for measuring the distance. To measure distance, choose the **Measure** tool from the **Measure** panel of the **Inspect** tab. Next, select one of the planes of the triad, and then select a face of the model; the measurements will be displayed in the **Measure** dialog box. For more information on measurement tools, refer to Chapter 3. If you modify the model, the triad becomes fade. For updating the Center of Gravity, you need to remove the existing COG triad. To do so, choose the **Center of Gravity** tool from the **View** tab again; the COG will disappear. Repeat the above procedure to display the updated COG.

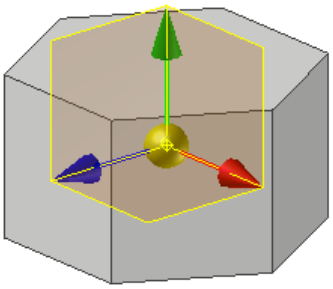

Figure 17-4 *Center of Gravity triad*

EXTRACTING THE iFEATURE

Ribbon: Manage > Author > Extract iFeature

Features such as slot and keyways are used in most of the designs with variation in dimensions. In Autodesk Inventor, you can create these features as sketched features in one design, and then extract and place them in other designs. These extracted features are called as iFeature. The iFeature is created by using the **Extract iFeature** tool. Note that if a feature created using the join operation is extracted as an iFeature and placed on the other model, the material will be added to the model. Similarly, if the feature created using the cut operation is extracted as an iFeature and placed on the other model, the material will be removed from the model.

Note

The features created using the 2D sketches are known as Sketched Features. Extrude, revolve, and sweep are some of the examples of the sketched features. The features that do not require a sketch are known as Placed Features. Fillet, chamfer, threads, and shells are some of the examples of the placed features.

After creating the required sketched features on the model, choose the **Extract iFeature** tool from the **Author** panel of the **Manage** tab; the **Extract iFeature** dialog box will be displayed, as shown in Figure 17-5. The options in this dialog box are discussed next.

Type Area

In this area, there are two radio buttons, **Standard iFeature** and **Sheet Metal Punch iFeature**. By default, the **Standard iFeature** radio button is selected. This button is used to create the iFeature that has to be placed in the part environment. You can select the **Sheet Metal Punch iFeature** radio button if you want to create an iFeature that has to be placed in the part or sheet metal environment. Also, note that if you want to create an iFeature using the **Sheet Metal Punch iFeature** radio button, then make sure that the sketch of the original feature must have a center point.

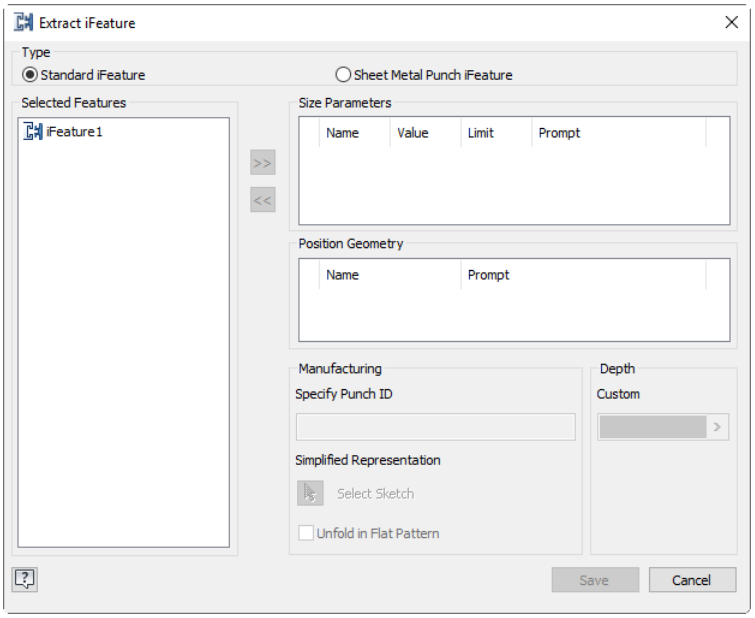

Figure 17-5 *The* ***Extract iFeature*** *dialog box*

Selected Features Area

After invoking the **Extract iFeature** dialog box, you need to select the sketched feature to be extracted as iFeature. Select a sketched feature from the **Browser Bar**; the feature will be displayed in the **Selected Features** area along with all its dimensions. If you select a feature from this area, the two buttons on the right of this area will get activated. Next, choose the button with arrows pointing toward right; the dimensions of the selected feature will be displayed in the respective column in the **Size Parameters** area.

Size Parameters Area

This area displays the dimensions and parameters to be edited at the time of inserting an iFeature in another design. If you need to edit a particular parameter, then click in its corresponding column and edit it.

Position Geometry Area

This area displays the reference geometry that defines the position of the iFeature. It is recommended that you include all the dependent geometries in this area, so that they can be used to define the position of the iFeature while inserting it.

Manufacturing Area

The options in this area will be activated only when you select the **Sheet Metal Punch iFeature** radio button in the **Type** area. Using these options, you can specify the punch ID in the **Specify Punch ID** edit box. If you have selected multiple features to create the sheet metal punch iFeature, then you can specify the reference center point by choosing the **Select Sketch** button.

Depth Area

The **Custom** edit box in this area is used to specify the punching depth.

After defining all parameters, choose the **Save** button; the **Save As** dialog box will be displayed. This dialog box is used to save the iFeature created. The iFeature file will be saved in **.ide* file format.

INSERTING THE iFEATURE

Ribbon: Manage > Insert > Insert iFeature



The **Insert iFeature** tool is used to insert the iFeatures into a model. To insert an iFeature, choose the **Insert iFeature** tool from the **Insert** panel of the **Manage** tab; the **Open** dialog box along with the **Insert iFeature** dialog box will be displayed, as shown in Figure 17-6.

Now, you can select the iFeature either from the **Open** dialog box or close this dialog box and then select the iFeature by using the **Insert iFeature** dialog box.

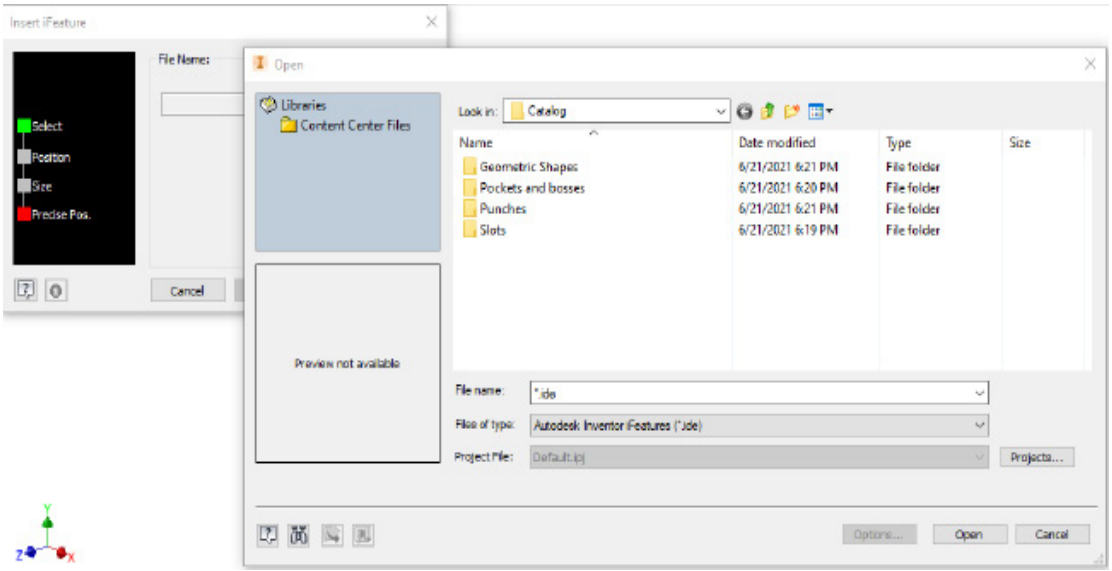

Figure 17-6 *The* ***Open*** *dialog box along with the* ***Insert iFeature*** *dialog box*

In the **iFeature** dialog box, the flow chart on the left shows four indicators and their names. The active indicator turns green and the information of the respective indicator is displayed on the right pane of this dialog box. These indicators are discussed next.

Select

This indicator is chosen by default. On the right side of this indicator, the **Browse** button is available in a pane. Choose this button; the **Open** dialog box will be displayed. You can open the required **.ide* file using this dialog box.

Position

When you open a **.ide* file, the **Position** indicator will be activated and names of the reference geometry such as work plane, point, axis, and line will be displayed in the list box. You need to define the reference geometry in the model where you need to place it. To do so, click once on the name of the reference geometry in the dialog box and then specify its position in the drawing window.

Size

After defining the position of the reference geometry, choose the **Next** button; the **Size** indicator will be activated and the dimensions will be displayed along with their names on the right pane of the indicator. You can modify these dimensions according to your requirement.

Precise Pos.

After defining all the dimensions of the iFeature, choose the **Next** button; the **Precise Pos.** Indicator will be activated and two radio buttons will be displayed in the **Upon Completion of Placement** area on the right side of the pane. These radio buttons are discussed next.

Activate Sketch Edit Immediately

If you select this radio button and then choose the **Finish** button, the Sketching environment will be invoked.

Do Not Activate Sketch Edit

By default, this radio button is selected. As a result, the Sketching environment will not be invoked on choosing the **Finish** button.

After completing all the steps, choose the **Finish** button to place the iFeature.

CREATING iMates

Ribbon: Manage > Author > Create iMate



Some parts such as bolts, rods, washers, nuts, and flanges are used in many assemblies in the same way. So, if you specify the mate references on such parts before they are assembled, assembling these parts will be easier. These mate references are called iMates. After defining an iMate on a part, if you place it in the Assembly environment, it will be placed in its position automatically. To create an iMate, first create the part or subassembly and then invoke the **Create iMate** tool from the **Author** panel of the **Manage** tab; the **Create iMate** dialog box will be displayed, as shown in Figure 17-7. This dialog box is similar to the **Place Constraints** dialog box discussed in Chapters 9 and 10. However, in this dialog box, the **Translation** tab is not available. Select the type of mate to be applied to the part from the **Type** area and then select the face to which the mate has to be applied. Note that you can select the type of mate from the **Type** area

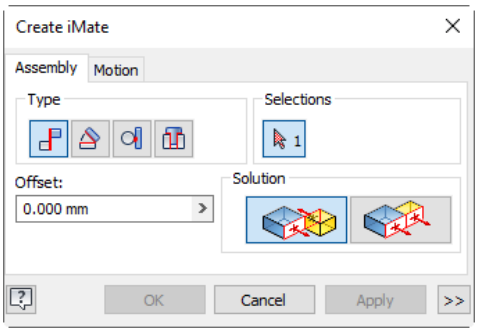

Figure 17-7 *The* ***Create iMate*** *dialog box*

available in the **Assembly** or **Motion** tab. At the lower right corner of this dialog box, the **More** button is provided. If you choose this button, the **Create iMate** dialog box will expand. Figure 17-8 shows the partial view of the expanded **Create iMate** dialog box. This expanded dialog box can be used to increase the accuracy of the mate. The options in the expanded dialog box are discussed next.

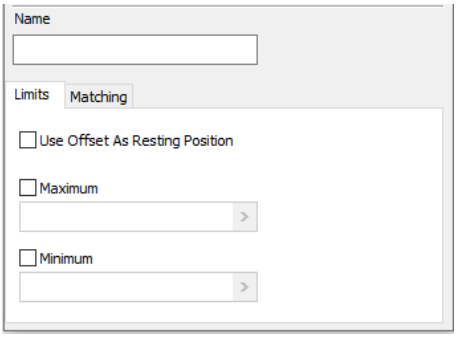

Figure 17-8 *Options in the expanded* ***Create iMate*** *dialog box*

Name Area

You can specify the name of the current iMate in the edit box of this area. If you leave this area blank, a default name will be given to the iMate.

Limits Tab

In Autodesk Inventor, you can specify the maximum and minimum limits of the constraint to be applied to an iMate component. You can specify these limits in the **Maximum** and **Minimum** edit boxes in the **Limits** tab. These options of the **Limits** tab have already been discussed in detail in Chapter 9.

Matching Tab

In this tab, you can list the name of iMate with which the part will mate. When a part is placed in the assembly, the system will first try to mate the part with the iMate located in the **Match List** area. For adding, deleting, and moving the name in the list box, four buttons are provided at the right side of the list box. These buttons are discussed next.

Add name to list



If you choose this button, the **New Name** edit box will be displayed in the **Match List** list box. In the edit box, you can specify the name of the iMate to which this part has to be assembled. For adding another name, you need to choose this button again.

Delete selected name



This button is used to remove the selected name from the **Match List** list box.

Move selected name up in priority



This button is used to move the selected name one step up in the **Match List** list box to change the priority of matching.

Move selected name down in priority



This button is used to move the selected name one step down in the **Match List** list box to change the priority of matching.

After setting the parameters, choose the **OK** button to apply iMates. You will observe that a circular symbol is attached to a face of the part. Also, the **iMates** node is created in the **Browser Bar**.

APPLYING iMATES IN THE ASSEMBLY ENVIRONMENT

For applying iMates in an assembly, place the first component to which iMates are assigned. Next, you need to place the second component to which the respective iMates are assigned. To place the second component, choose the **Place** tool from the **Component** panel in the **Assemble** tab; the **Place Component** dialog box will be displayed. The buttons in the **iMates** area of this dialog box can be used to place the component using different methods, refer to Figure 17-9. These methods are discussed next.



Figure 17-9 *The* ***iMates*** *area in the* ***Place Component*** *dialog box*

Interactively place with iMates



This button is used to insert the component with matching iMates in an assembly. It also enables you to place the number of instances in an assembly.

Automatically generate iMates on place



If this button is activated, then on inserting the iMate component, the component will automatically be assembled with the other respective iMate component of the assembly. Choose the **Open** button after selecting the component and specifying the method; the part will be placed in its position automatically. If you have chosen the **Interactively place with iMates** button, then you will be prompted to specify the next location. Else, the tool will be terminated.

VIEWING THE iPROPERTIES

File Menu: iProperties

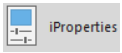

The properties of the component created in the Assembly environment in Autodesk Inventor are known as iProperties. iProperties can be used for creating reports, updating BOM, updating title block, and to display all the related information of the component created. The options of iProperties are internally linked with the related component. Therefore, whenever you update information in iProperties, it will be reflected in the related component. You can invoke this tool by choosing the **iProperties** option from the **File Menu**. Alternatively, right-click on the name of the component in the **Browser Bar** of the current assembly and choose **iProperties** from the shortcut menu displayed; the **iProperties** dialog box of the corresponding component will be displayed, as shown in Figure 17-10. The tabs in this dialog box are discussed next.

General Tab

This tab displays the name, size, and type of the file. It also displays the date when the file was created, modified, and accessed.

Summary Tab

This tab is used for classifying and managing files. This tab displays eight edit boxes: **Title**, **Subject**, **Author**, **Manager**, **Company**, **Category**, **Keywords**, and **Comments**. You can enter the required information in these edit boxes. On choosing the **Apply** button, this information updates the Title blocks and BOM in the drawing file.

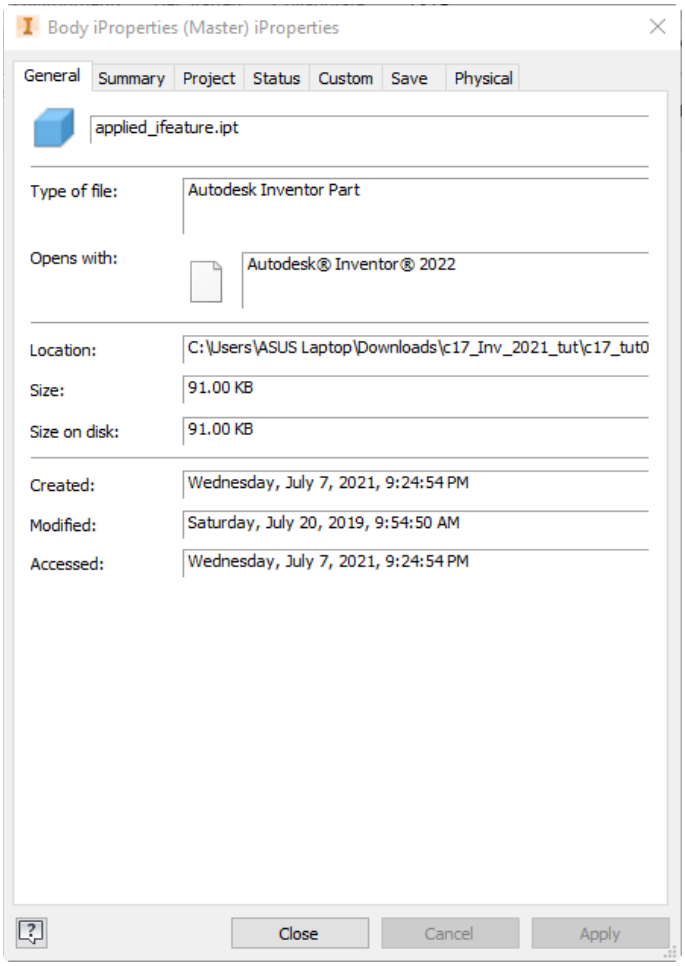

Figure 17-10 *The* ***iProperties*** *dialog box*

Note

If the component is saved at any location after it is created then the ***iProperties*** *dialog box displayed will be different from the one shown in Figure 17-10.*

Project Tab

This tab is used to define the project iProperties of the component.

Status Tab

This tab is used to define the status of the component.

Custom Tab

This tab is used to add the custom iProperties of the component.

Save Tab

This tab is used for setting the saving options of the image of the component. In this tab, the **Save Preview Picture** check box is selected by default. Therefore, it saves the thumbnail image of the model that will be displayed in the **Open** dialog box. You can turn off the image from the **Open File** dialog box by clearing this check box.

Occurrence Tab

This tab is used to specify the properties of the component. By using this tab, you can make any component grounded, adaptive and so on. You can select the **Degrees of Freedom** check box to display the degrees of freedom of a component. By selecting the **Suppress** check box, you can suppress any component. You can also set preferences for BOM Structure by using the **Current Offset from the Parent Assembly Origin** area and can place a component at an offset from the parent assembly. Note that, the **Occurrence** tab will be available only when you invoke the **iProperties** dialog box by right-clicking on the component of an assembly in the **Browser bar** and choose the **iProperties** option from the shortcut menu.

Physical Tab

This tab is used to calculate and display the physical and inertial properties of the model. This helps you analyze how the differences in materials, tolerances, and dimensions can affect the model. To analyze the physical properties, select the required material from the **Material** drop-down list; the values of density, mass, area, and volume of the model are displayed for the selected material. Note that the **Material** drop-down list will be activated only in the part environment. The coordinates of the COG are displayed in the **General Properties** area. In the **Inertial Properties** area, the **Principal**, **Global,** and **Center of Gravity** buttons are available. By choosing these buttons, you can view the inertial properties of the component for the applied materials.

CREATING USER-DEFINED DRAWING SHEETS

Autodesk Inventor provides you an option to create user-defined drawing sheets by defining border and title block according to your requirement. The procedures to create the user-defined drawing sheets are discussed next.

Whenever you open a drawing (*.idw*) file, the **Drawing Resources** node will be displayed in the **Browser Bar**. Click on the + sign beside the **Drawing Resources** node to expand it. Three sub-nodes will be displayed under this node. These sub-nodes and their options are discussed next.

Sheet Formats

Click on the + sign of this sub-node; a list of drawing sheets will be displayed. If you right-click on any of these sheets; a shortcut menu will be displayed, as shown in Figure 17-11. Choose **New Sheet** from the shortcut menu; the **Select Component for View on Sheet: Sheet** dialog box will be displayed, as shown in Figure 17-12. In this dialog box, choose the button on right of the **Document Name** drop-down list and open a part or an assembly; the path of the selected component will be displayed in the **Document Name** drop-down list. Choose the **OK** button from the **Select Component for View on Sheet: Sheet** dialog box; the selected model will be drafted in the new sheet with a number of views. Note that the number of views and the size of the new sheet depend upon the name of the sheet selected in the **Browser Bar**.

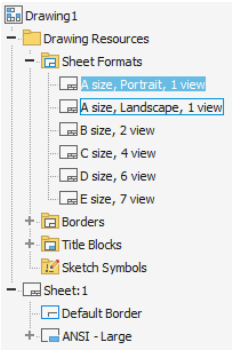

Figure 17-11 *Creating a new sheet using the shortcut menu*

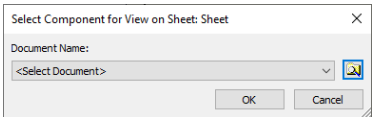

Figure 17-12 *The **Select Component for View on Sheet:Sheet** dialog box*

Borders

The **Borders** sub-node has a predefined border style, which will be applied to the sheet. You can also define and insert a new border and new zone border in the drawing sheet using this node. The procedures to define a new border, border zone, and inserting a new border zone are discussed next.

Defining a New Border

To define a new border, choose the **Define New Border** option from the shortcut menu that is displayed on right-clicking on the **Borders** sub-node, refer to Figure 17-13; the sketching environment will be activated. You can draw a border in the sketching environment based on your requirement. After drawing the border, choose the **Return** tool from the **Quick Access Toolbar** or choose the **Finish Sketch** button from the **Exit** panel of the **Sketch** tab; the **Border** dialog box will be displayed, as shown in Figure 17-14. Enter a new name in the **Name** edit box and choose the **Save** button; the new name will be displayed in the **Browser Bar** below the **Borders** node.

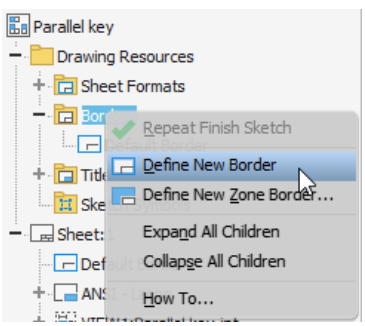

Figure 17-13 *Choosing the **Define New Border** option from the shortcut menu*

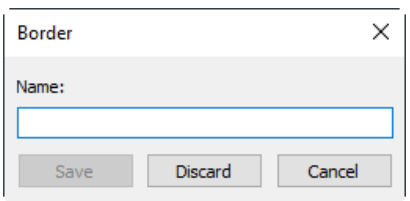

Figure 17-14 *The **Border** dialog box*

Defining a New Zone Border

To define a new zone border, choose the **Define New Zone Border** option from the shortcut menu that is displayed on right-clicking on the **Borders** sub-node; the **Default Drawing Border Parameters** dialog box will be displayed. In this dialog box, you can set the horizontal and vertical zones of the border from the respective areas. If you choose the **>>** button from the lower right corner of this dialog box, the **Default Drawing Border Parameters** dialog box will expand, as shown in Figure 17-15. In the expanded area, you can set the appearance of the border. After setting all parameters, choose the **OK** button; the new border with its dimensions will be displayed in the sketching environment, where you can edit these dimensions. You can modify the border using the tools provided in the sketching environment. After modifying the border according to the requirements, choose the **Return** button from the **Quick Access Toolbar**; the **Borders** dialog box will be displayed again, refer to Figure 17-14. Enter a new name in the **Name** edit box and choose the **Save** button; the new name will be displayed in the **Browser Bar** below the **Borders** sub-node.

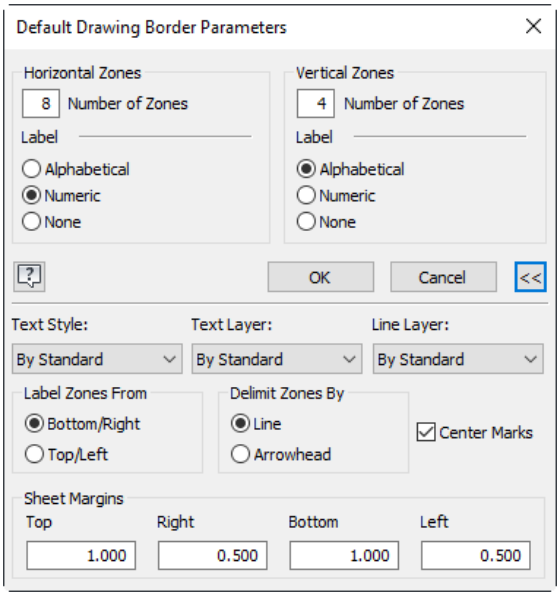

Figure 17-15 *The* ***Default Drawing Border Parameters*** *dialog box*

Inserting a New Border

For inserting a new border, you need to delete the existing border. To do so, right-click on the **Default Border** option available in the **Sheet:1** node of the **Browser Bar**; a shortcut menu will be displayed, as shown in Figure 17-16. Choose the **Delete** option from the shortcut menu; the existing border will be deleted from the drawing sheet as well as from the **Browser Bar**. After deleting the border, click on the **Borders** sub-node; all available borders will be displayed. Double-click on any of the borders; the selected border will be displayed in the active drawing sheet.

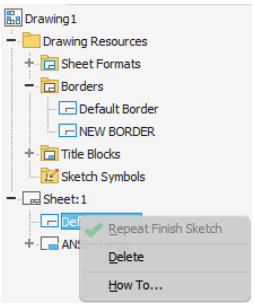

Figure 17-16 *Deleting the existing border using the shortcut menu*

Title Blocks

The **Title Blocks** sub-node has a predefined title block. You can define a new title block using the procedure given next.

Defining a New Title Block

Choose the **Define New Title Block** option from the shortcut menu of the **Title Blocks** sub-node, as shown in Figure 17-17; the sketching environment will be activated. You can draw a title block in the sketching environment based on your requirements. After drawing the title block, choose the **Finish Sketch** button from the **Exit** panel of the **Ribbon**; the **Title Block** dialog box will be displayed, as shown in Figure 17-18. Enter a new name in the **Name** edit box and choose the **Save** button; the name will be displayed in the **Browser Bar** below the **Title Blocks** sub-node. You can insert a new title block in a way similar to inserting a new border.

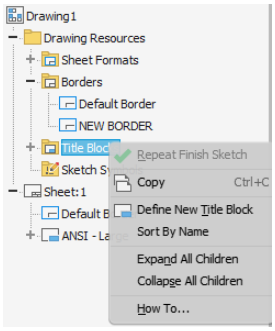

Figure 17-17 *Defining a new title block using the shortcut menu*

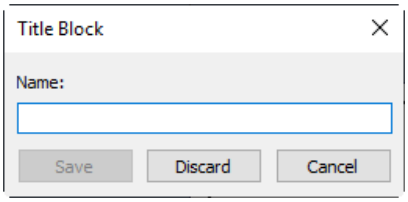

Figure 17-18 *The* ***Title Block*** *dialog box*

Creating a Customized Title Block

You can create a customized title block that gets updated when its iProperties change. To do so, right-click on the name of the title block that is available in the **Browser Bar** below the **Title Blocks** sub-node; a shortcut menu will be displayed, as shown in Figure 17-19. Choose the **Edit** option from the shortcut menu; the sketching environment will be activated. Also, the title block along with the dimensions and names will be displayed in the graphics window, as shown in Figure 17-20. These names are internally linked with the iProperties of the active drawing file. Therefore, it is recommended that while editing the title block, keep the required names and delete the remaining portion of the title block.

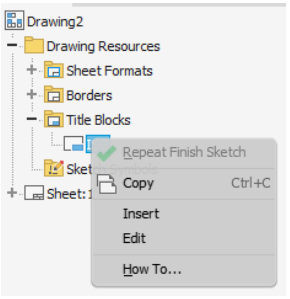

Figure 17-19 *The shortcut menu displayed on right-clicking the title block name*

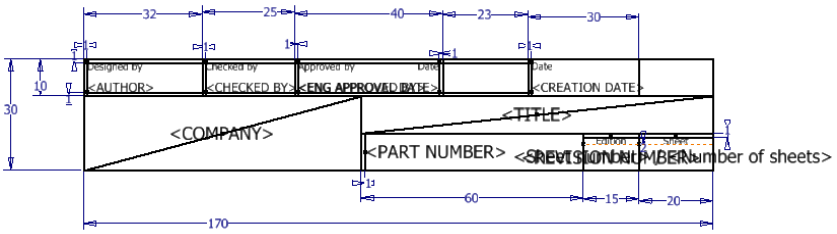

Figure 17-20 *Title block displayed in the Sketching environment*

If you try to move the name of the title block, then the complete title block will be moved. To avoid this movement, right-click on the required name and then choose the **Text Box** option from the shortcut menu, as shown in Figure 17-21. Now, you can move the required name. In this way, you can move all the required names and delete the remaining portion of the title block.

Draw a new layout for the title block using the tools provided in the **Create** panel of the **Sketch** tab and move the names to the required area, refer to Figure 17-22.

After customizing the title block, choose the **Return** tool from the **Quick Access Toolbar**; the **Save Edits** message box will be displayed, as shown in Figure 17-23. If you choose the **Yes** button from this message box, then the changes made to the title block will be saved in the existing title block and will be displayed in the graphics window, as shown in Figure 17-24. If you choose the **Save As** button, the **Title Block** dialog box will be displayed. In the **Name** edit box of this dialog box, you can enter the name for the title block. On doing so, the name will be displayed in the **Title Blocks** sub-node in the **Browser Bar**.

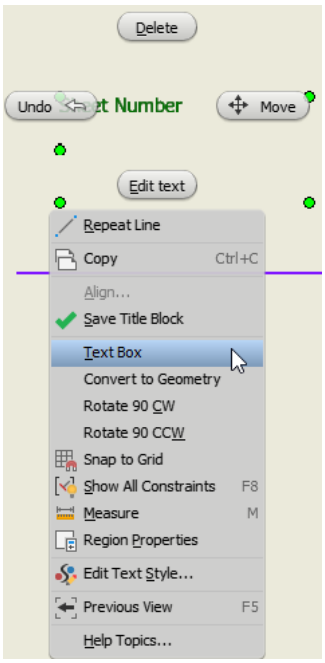

Figure 17-21 *Choosing the* ***Text Box*** *option from the Marking Menu*

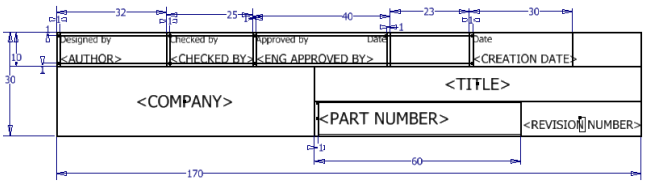

Figure 17-22 *Editing a title block in the Sketching environment*

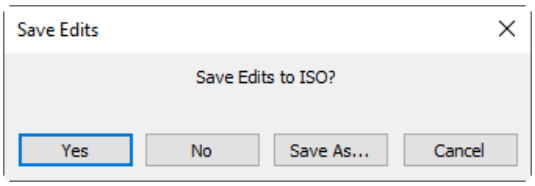

*Figure 17-23 The **Save Edits** message box*

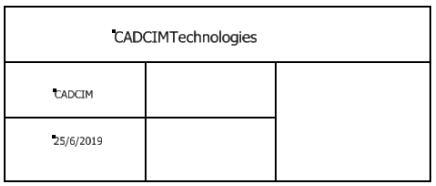

Figure 17-24 Customized title block created

Next, choose the **iProperties** option from the **File Menu** to invoke the **iProperties** dialog box. Enter the required information in different tabs of the dialog box for the current drawing. Now, choose the **Apply** button and then the **Close** button from the **iProperties** dialog box; the information will be displayed in the title block, see Figure 17-25.

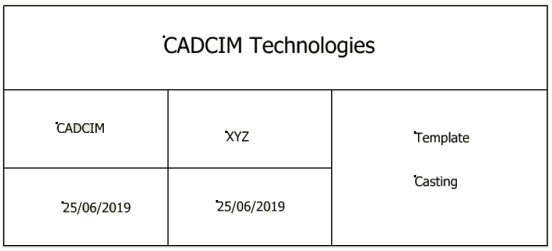

Figure 17-25 The updated title block with the change in its iProperties

Inserting a New Title Block

Click on the + sign of the **Title Blocks** sub-node in the **Browser Bar**; a list of all available title blocks will be displayed in the **Browser Bar**. You can insert any of the title blocks from this list. Note that you need to delete the existing title block before inserting a new one. To delete the existing title block, click on the + sign of the sheet in the **Browser Bar**; a node list will be displayed. Next, right-click on the name of the title block available below the name of the sheet **Sheet:1** in the **Browser Bar**; a shortcut menu will be displayed, as shown in Figure 17-26. Choose the **Delete** option from the shortcut menu; the existing title block will be deleted. To activate another title block, double-click on the name of the title block that is available in the **Title Blocks** sub-node in the **Browser Bar**; the selected title block will be displayed in the drawing window.



Tip

It is recommended that you save the file after creating the customized border and title block so that you can use it as a template file.

Creating Sketch Symbols

Sometimes in the drafting process, you need to use some special symbols frequently. For this, Autodesk Inventor provides a special sub-node, named **Sketch Symbols**. You can use this option to create a customized sketch symbol that can be used whenever you want. To do so, right-click on the **Sketch Symbols** sub-node in the **Browser Bar**; a shortcut menu will be displayed,

as shown in Figure 17-27. If you choose **Define New Symbol** from the shortcut menu, the sketching environment will be activated. You can draw any symbol by using the sketching tools of the **Create** panel in the **Sketch** tab. After creating a symbol, if you choose the **Return** tool from the **Quick Access Toolbar** or choose the **Finish Sketch** button from the **Exit** panel of the **Sketch** tab, the **Sketch Symbol** dialog box will be displayed. Enter a name for the symbol in the **Name** edit box and choose the **Save** button; the name will be displayed below the **Sketch Symbols** in the **Browser Bar**. If you double-click on that name in the **Browser Bar**, then the cursor will be changed to plus sign and the created symbol gets attached to it. Next, if you click anywhere in the drawing window, the sketch symbol that you created will be placed at that point. You can place a number of sketch symbols in the graphics window by clicking at various points.

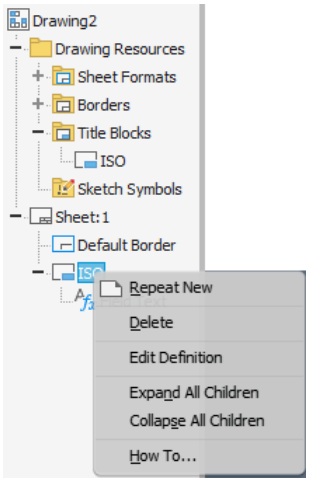

Figure 17-26 *Choosing the* ***Delete*** *option from the shortcut menu*

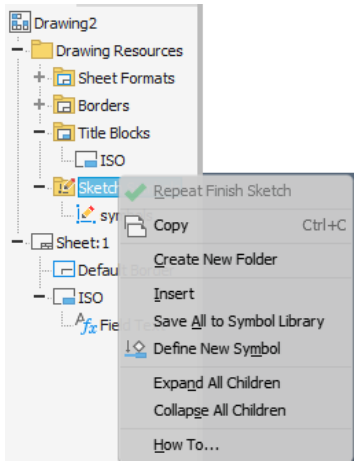

Figure 17-27 *The shortcut menu of the* ***Sketch Symbols*** *sub-node*



Tip

If you have generated the drawing views of a model or an assembly, you can display the COG mark on it. To do so, click on the + sign on the left of the ***View*** *node; the model or assembly node will be displayed. Next, right-click on the corresponding model or assembly node to invoke a shortcut menu. Choose the* ***Center of Gravity*** *option from this shortcut menu; a plus (+) sign will be displayed on the related drawing view indicating the position of the COG of that model.*

IMPORTING AutoCAD BLOCKS INTO Inventor

Ribbon: Annotate > Symbols > Import AutoCAD Block



In Autodesk Inventor, you can import the blocks created in AutoCAD into the drawing sheets of Inventor. Also, you can move, scale, and rotate them in Inventor. To import an AutoCAD block into Inventor, first create it in AutoCAD and then save it. Next, start a new drawing (dwg) file in Inventor and choose the **Import AutoCAD Block** tool from **Annotate > Symbols** in the **Ribbon**; the **Import Block** dialog box will be displayed, as shown in Figure 17-28. Note that the **Import AutoCAD Block** tool will be available only when you select the .dwg template from the **Create New File** dialog box to create a new drawing file

Browse to the required AutoCAD file and then select it; all blocks created in the file will be displayed in the form of icons in the **Block Definitions** area of the **Import Block** dialog box, see Figure 17-28. Select the required block from the **Block Definitions** area and then specify the scale and rotation angle values in the **Scale** and **Rotate** edit boxes at the bottom of the dialog box. Next, choose the **Insert** button; the **Import Block** dialog box will disappear and you will be prompted to insert the AutoCAD block. Note that the **Insert** button will be available only when you select a block from the **Block Definitions** area. Click on the drawing sheet at the location where you want to place the block; the block will be placed at the specified location. You can place any number of AutoCAD blocks in the drawing sheet.

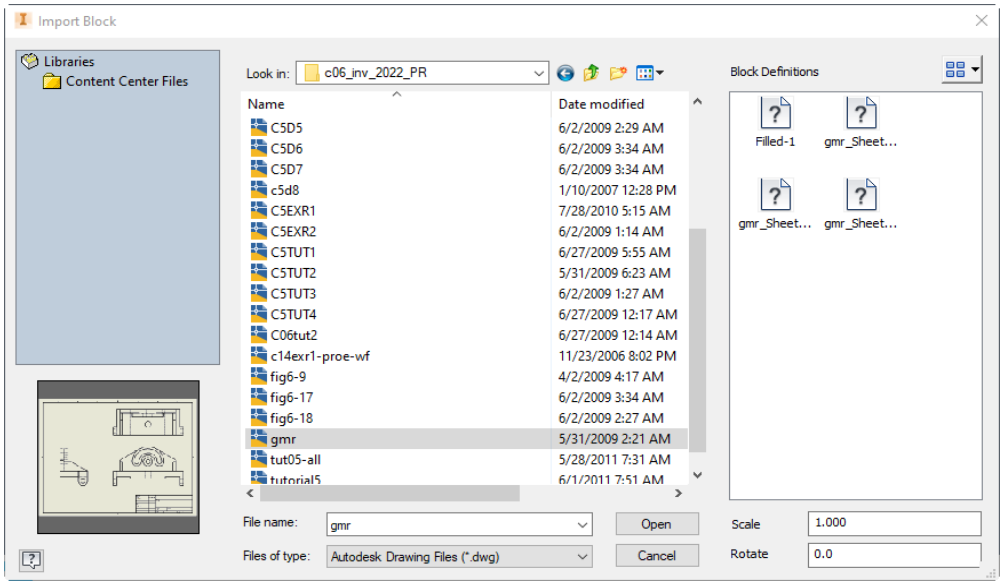

Figure 17-28 *The* ***Import Block*** *dialog box*

After inserting the required block, right-click and then choose **Done [ESC]** from the shortcut menu; the inserted blocks will be displayed in the **AutoCAD Blocks** node under the **Sheet** node in the **Browser Bar**, refer to Figure 17-29. Expand the **AutoCAD Blocks** node to display the inserted blocks. If you double-click on a block, the **AutoCAD Blocks** dialog box will be displayed, as shown in Figure 17-30. In this dialog box, you can specify the scale and rotation angle values in their respective edit boxes. By default, the **Static** check box is selected in this dialog box. As a result, the AutoCAD block behaves as static entity and you cannot rotate or scale it manually. However, you can move it by using the base point grip that is displayed in green in the drawing sheet. If you clear this check box, the grips surrounding the block will be displayed. With the help of these grips, you can scale, move, and rotate a block manually. The yellow and blue grips are used to scale and rotate the block, respectively.

Figure 17-31 shows an AutoCAD block with grips displayed on it in the drawing sheet.



Note

*You can also invoke the **AutoCAD Blocks** dialog box by using the **Drawing Resources** node in the **Browser Bar**. To do so, expand the **Drawing Resources** node; the sub-nodes of this node will be displayed, refer to Figure 17-29. Expand the **AutoCAD Blocks** node; all the inserted blocks will be displayed under this node. Next, right-click on the required block and choose the Edit **AutoCAD Blocks** option from the shortcut menu; the **AutoCAD Blocks** dialog box will be displayed, refer to Figure 17-30.*

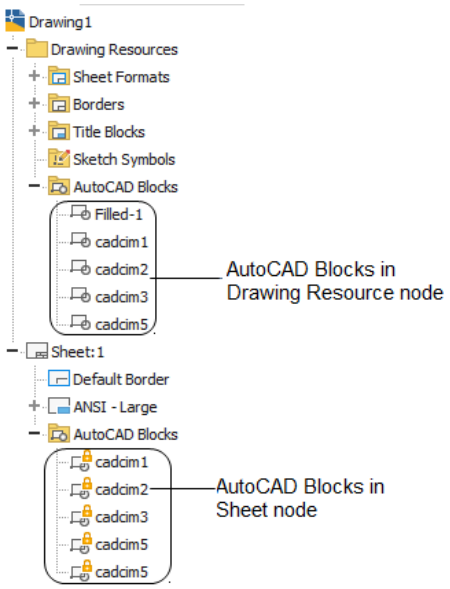

Figure 17-29** AutoCAD blocks in the **Sheet** and **Drawing Resources** nodes in the **Browser Bar

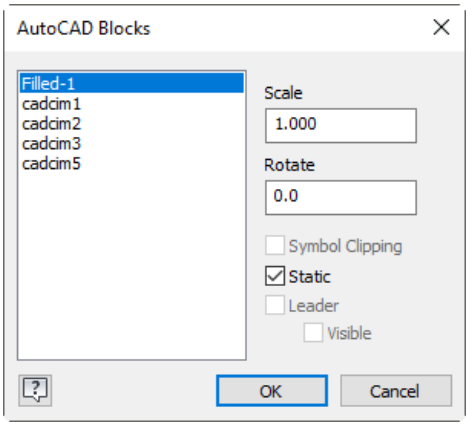

***Figure 17-30** The **AutoCAD Blocks** dialog box*

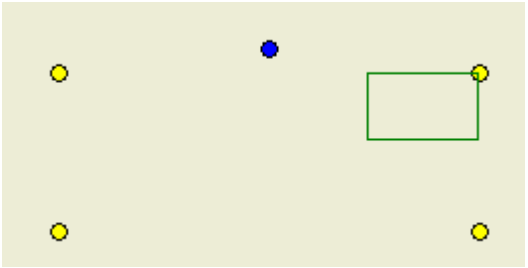

Figure 17-31 *Grips displayed on an AutoCAD block*

TUTORIALS

Tutorial 1

In this tutorial, you will create a shaft with a groove, as shown in Figure 17-32. Extract the groove as an iFeature and place it on a hexagonal bar, as shown in Figure 17-33.

(Expected time: 45 min)

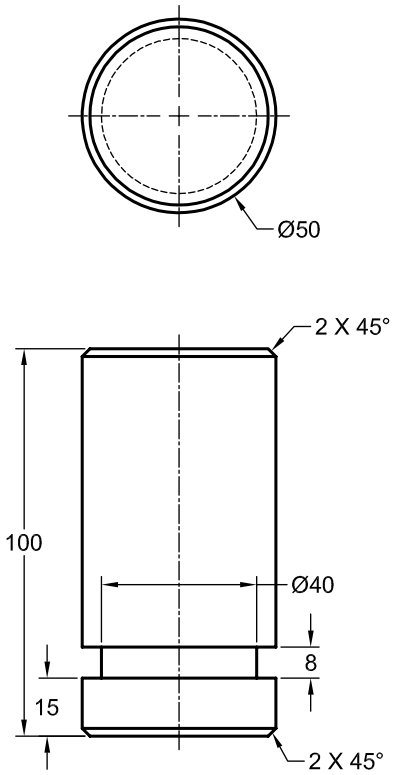

Figure 17-32 *A shaft with a groove*

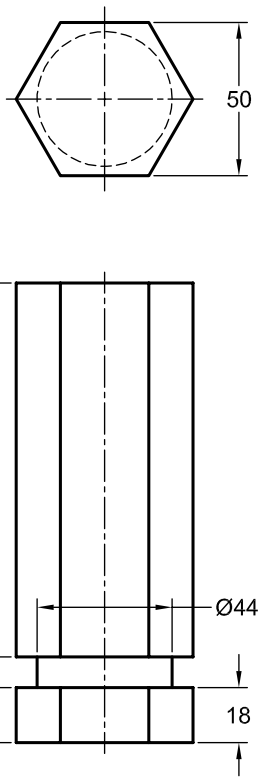

Figure 17-33 *Hexagonal bar with a groove*

The following steps are required to complete this tutorial:

a. Create a circular shaft and chamfer the sharp edges.
b. Draw the profile for the groove on the XZ plane and apply the dimensions to the profile, refer to Figure 17-34.
c. Revolve the profile about the Z-axis using the **Cut** option, refer to Figure 17-35.
d. Extract the iFeature of the groove using the **Extract iFeature** tool.
e. Create a hexagonal shaft and place the iFeature by using the **Insert iFeature** tool.
f. Save the model.

Creating the Shaft

First, you need to create a shaft and then create an iFeature from it.

1. Choose the **Start 2D Sketch** tool from the **Sketch** panel of the **3D Model** tab; the default planes are displayed and you are prompted to select the sketching plane.

2. Now, select the **XZ** plane as the sketching plane from the graphics window; the Sketching environment is invoked and the **XZ** plane becomes parallel to the screen.

3. On the XZ plane, create a circle of 50 mm diameter such that its center coincides with the origin. Next, exit the Sketching environment.

4. Extrude the profile to 100 mm using the **Extrude** tool.

5. Apply the chamfer of 2 mm at the ends of the shaft.

Creating the Groove

1. Choose the **Start 2D Sketch** tool from the **Sketch** panel of the **3D Model** tab and select the **XY** Plane as the Sketching plane; the Sketching environment is invoked.

2. Use the ViewCube to orient the model if required, see Figure 17-34.

3. Press the F7 key to slice the model.

4. Draw a rectangle and apply vertical dimensions (20 mm and 25 mm) to it with respect to the origin, refer to Figure 17-34. Apply the horizontal dimension (15 mm) to it with respect to the origin, see Figure 17-34. Also, dimension the length (8 mm) of the rectangle.

5. Choose the **Finish Sketch** tool from the **Exit** panel of the **Sketch** tab; the part modeling environment is displayed.

6. Invoke the **Revolve** tool. Next, choose the **Cut** option from the **Output** node and create the groove feature with Y axis as the axis of the revolution, see Figure 17-35.

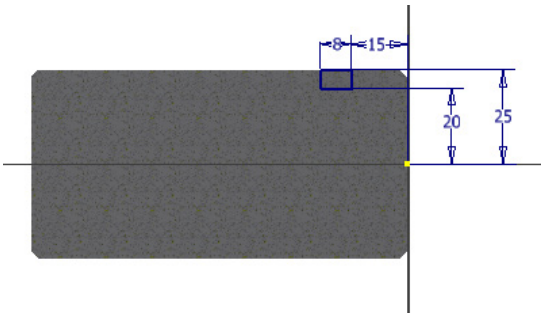

Figure 17-34 *Dimensions applied to the profile for creating a groove*



Figure 17-35 *The shaft after creating the groove*

7. Save the part with the name *shaft_iFeature.ipt* at the following location:

   C:\Inventor_2022\c17\Tutorial1

Creating the iFeature

1. Choose the **Extract iFeature** tool from the **Author** panel of the **Manage** tab; the **Extract iFeature** dialog box is displayed.

2. Select the **Revolution1** node in the **Browser Bar**; the name of the feature and its related dimensions and references are displayed in the **Selected Features** area of the **Extract iFeature** dialog box.

3. Select **Center Point** from the **Browser Bar**; the **Center Point** is displayed along with **Extrusion1**, **Chamfer1**, and **Revolution1** in the **Selected Features** area. It is also displayed in the **Position Geometry** area with the name Point1.

4. Right-click on **Extrusion1** in the **Selected Features** area and then choose **Remove Feature** from the flyout displayed; all features except **Center Point** and **Revolution1** are removed from the **Selected Features** area.

5. Select the **Revolution1** node from the **Selected Features** area and choose the double arrow pointing toward the right; all related dimensions are displayed in the **Size Parameters** area and **Sketch Plane1** is displayed in the **Position Geometry** area.

6. Select **Y Axis** from the **Browser Bar**; the **Y Axis** is displayed in the **Selected Features** area. It is also displayed in the **Position Geometry** area with the name Axis1.

   You will notice that in the **Size Parameters** area, default names are displayed in the **Prompt** column. You need to change these names. Changing the default names will make identifying and modifying a parameter easy when you insert iFeatures. Follow the steps given next to edit default names.

7. Click once in the field corresponding to the value 20 mm in the **Prompt** column; an edit box is displayed.

8. Enter **ID** in the edit box.

9. Similarly, change the default names for the remaining values in the **Prompt** column as given next in the table.

Value	Prompt to be modified as
15	REF
25	OD
8	GW

10. Change the field corresponding to **Sketch Plane1** to **Sketch Plane** in the **Prompt** column of the **Position Geometry** area.

11. Similarly, change the fields corresponding to **Point1** and **Axis1** to **Center Point** and **Y Axis**, respectively in the **Prompt** column of the **Position Geometry** area. After changing the prompts, the **Extract iFeature** dialog box appears, as shown in Figure 17-36.

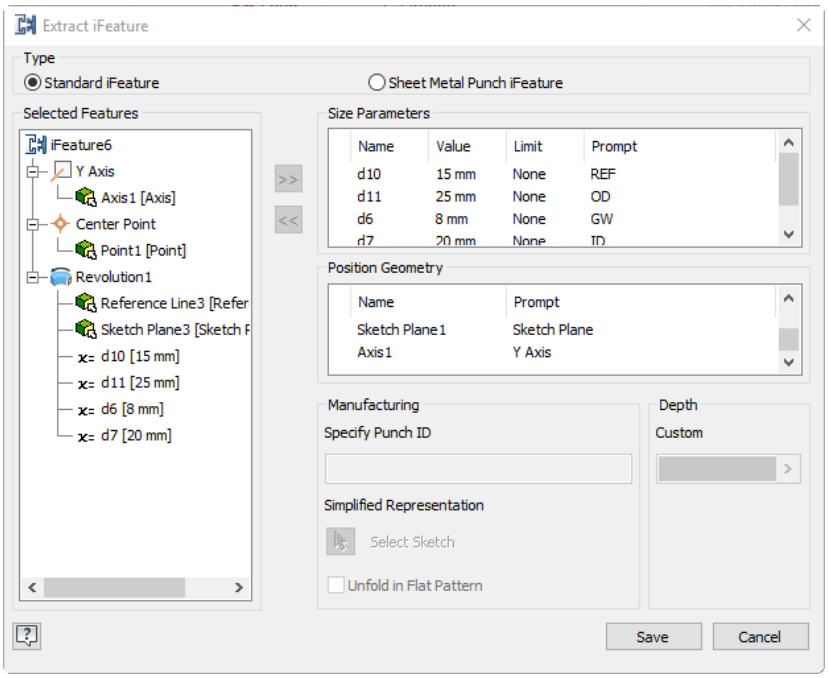

Figure 17-36 *The* ***Extract iFeature*** *dialog box*

12. Choose the **Save** button from the **Extract iFeature** dialog box; the **Save As** dialog box is displayed.

13. Save the iFeature with the name *groove_iFeature.ide* at the following location:

    C:\Inventor_2022\c17\Tutorial1

14. Save the part file and close it.

Creating the Hexagonal Shaft

1. Start a new part file.

2. Choose the **Start 2D Sketch** tool from the **Sketch** panel of the **3D Model** tab; the default planes are displayed and you are prompted to select the sketching plane.

3. Now, select the **XZ** plane as the sketching plane from the graphics window; the Sketching environment is invoked and the **XZ** plane becomes parallel to the screen.

4. Create a hexagon on the XZ plane, as shown in Figure 17-37.

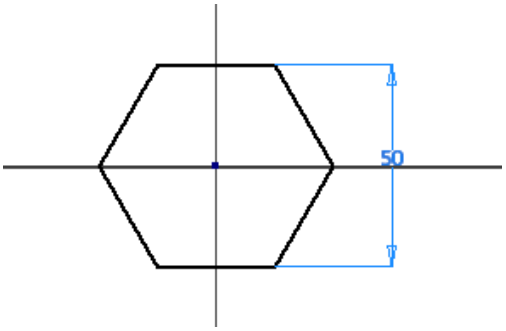

Figure 17-37 *Sketch for creating the Hexagonal shaft*

5. Extrude the profile up to 150 mm.

6. Choose the **Insert iFeature** tool from the **Insert** panel of the **Manage** tab; the **Insert iFeature** dialog box along with the **Open** dialog box is displayed. Close the **Open** dialog box by choosing the **Cancel** button from **Open** dialog box.

7. Choose the **Browse** button from the **Insert iFeature** dialog box; the **Open** dialog box is displayed again.

8. Open the *groove_iFeature.ide* file from *C:\Inventor_2022\c17\Tutorial1*; the **Position** indicator is activated. Also, on the right of the pane, **Sketch Plane1** is highlighted in red. On the lower side of the dialog box, a prompt is displayed prompting you to select the sketching plane for placing iFeature.

9. Select **XY Plane** from the **Browser Bar**; the **Point1** from the right pane turns red and you are prompted to select the Center Point.

10. Select **Center Point** from the **Browser Bar**; the **Axis1** from the right pane turns red and you are prompted to select the Z Axis.

11. Select the **Y Axis** from the **Browser Bar**.

12. Choose the **Next** button in the **Insert iFeature** dialog box; the **Size** indicator is highlighted in the left pane of the dialog box. Similarly, in the right pane of the dialog box, the dimensions of the iFeature are displayed.

13. Click on 20 mm in the right pane; **ID** is displayed in the prompt box.

14. Enter **22 mm** in place of 20 mm.

15. Click on 15 mm; **REF** is displayed in the prompt box. Enter **18 mm** in place of 15 mm.

16. Click on 25 mm; **OD** is displayed in the prompt box. Enter **30 mm** in place of 25 mm.

17. Click on 8 mm; **GW** is displayed in the prompt box. Enter **10 mm** in place of 8 mm.

18. Choose the **Refresh** button from the dialog box; the preview of the iFeature is displayed on the model.

19. Choose the **Next** button; the **Precise Pos.** indicator is activated on the left in the dialog box and the **Do Not Activate Sketch Edit** radio button is selected automatically.

20. Choose the **Finish** button; the iFeature is applied to the model, refer to Figure 17-38. You will notice that the **iFeature1:1** node is created in the **Browser Bar**.

21. Save the model with the name applied_iFeature at the location *C:\Inventor_2023\c17\Tutorial1* and then close the file.

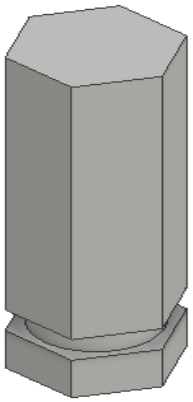

Figure 17-38 *The iFeature applied to the model*

Tutorial 2

In this tutorial, you will create a circlip and a shaft using the dimensions given in Figures 17-39 and 17-40. Apply iMates to the circlip and the groove of the shaft. Then, assemble the parts using the **Insert** constraint, as shown in Figure 17-41. **(Expected time: 45 min)**

The following steps are required to complete this tutorial:

a. Create the shaft.
b. Apply iMates to the groove of the shaft using the **Create iMates** tool.
c. Create the circlip and apply fillets according to dimensions.
d. Apply iMates to the circlip using the **Create iMates** tool.
e. Place the shaft in the new assembly file.
f. Place the circlip into the assembly using the **Automatically generate iMates on place** button from the **Place Component** dialog box.
g. Save the Assembly.

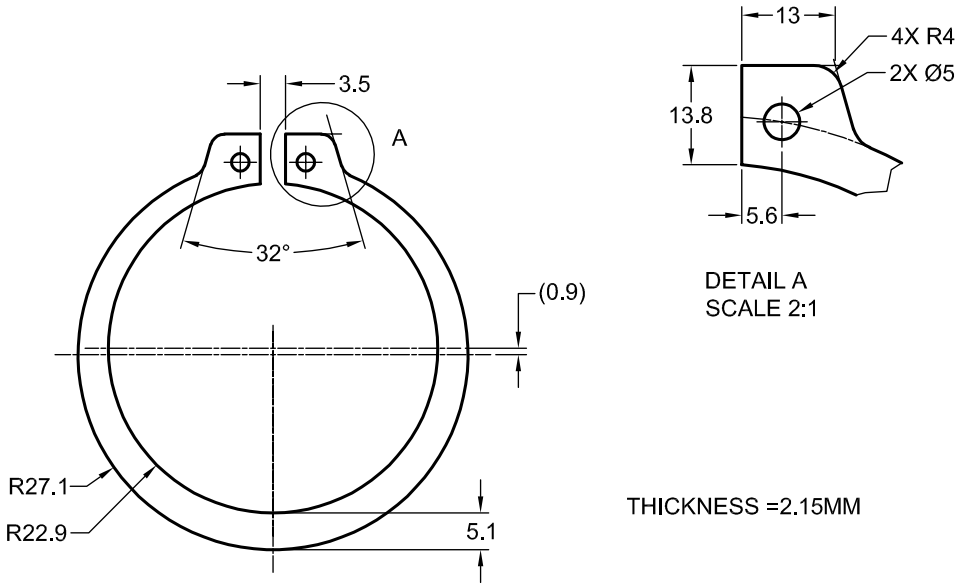

Figure 17-39 *The circlip for Tutorial 2*

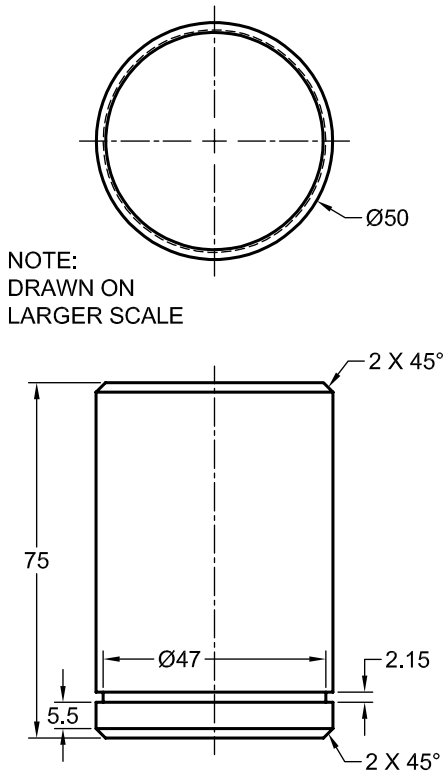

Figure 17-40 *A shaft with a groove*

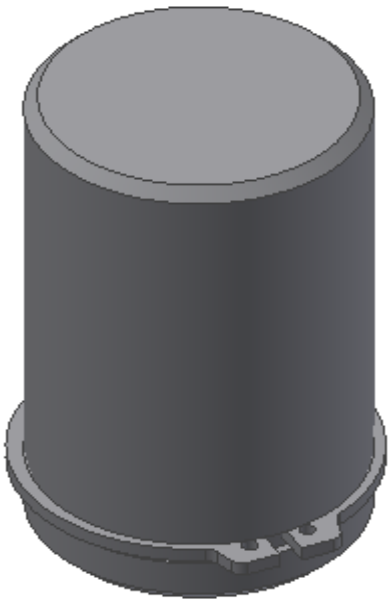

Figure 17-41 *Final assembly*

Applying iMates to the Shaft

1. Create the shaft with groove, refer to Figure 17-40 for dimensions.

2. Choose the **Create iMate** tool from the **Author** panel of the **Manage** tab; the **Create iMate** dialog box is displayed. Choose the **Insert** button from the **Type** area.

3. Choose the **>>** button available at the lower right corner of the dialog box; the dialog box expands.

4. Enter **insert_1** in the **Name** edit box and then choose the **Matching** tab; the **Match List** area is displayed, see Figure 17-42.

5. Choose the **Add name to list** button from the **Match List** area; an edit box is displayed in the list box.

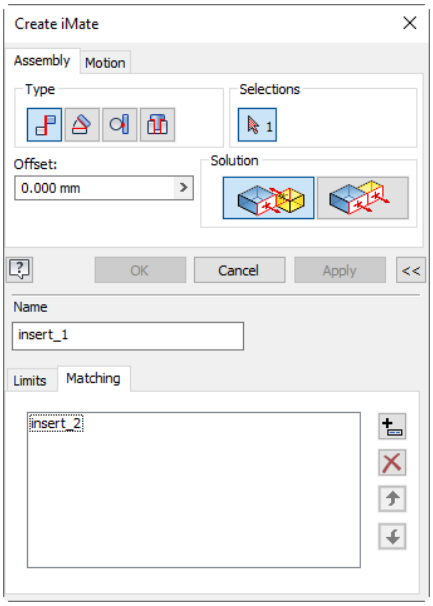

Figure 17-42 *The* ***Create iMate*** *dialog box*

6. Enter **insert_2** in the edit box displayed, refer to Figure 17-42.

7. Accept the default settings for the rest of the options and select the inner edge of the groove from the graphics window.

8. Choose the **Apply** button and then the **Cancel** button to close the dialog box.

9. Save the model with the name *shaft.ipt* and close the file.

Creating the Circlip

1. Start a new part file and invoke the Sketching environment by selecting XZ plane as the sketching plane.

2. Draw the profile for creating a circlip and then apply dimensions to it, as shown in Figure 17-43.

3. After drawing the sketch, extrude the profile up to 2.15 mm.

4. Apply the fillets of 1 mm radius to the model. The model after creating the fillets is shown in Figure 17-44.

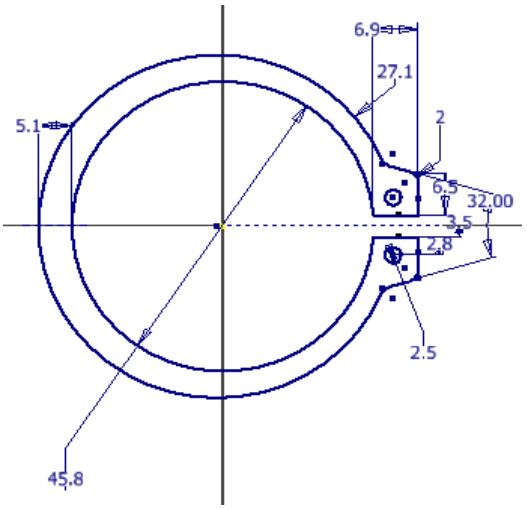

Figure 17-43 *Dimensions for circlip*

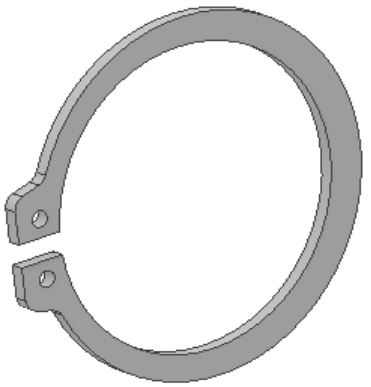

Figure 17-44 *Final rotated model of circlip*

Applying iMates to the Circlip

1. Choose the **Create iMate** tool from the **Author** panel of the **Manage** tab; the **Create iMate** dialog box is displayed. Now, choose the **Insert** button from the **Type** area.



2. Choose the **>>** button from the lower right corner of the dialog box; the dialog box expands.

3. Enter **insert_2** in the **Name** edit box. Note that this is the name you entered in the **Match List** area of the **Create iMate** dialog box while setting the iMate of the shaft, refer to Figure 17-42.

4. Choose the **Matching** tab from the **Create iMate** dialog box and then choose the **Add name to list** button from the **Match List** area; an edit box is displayed in the list box.



5. Enter **insert_1** in the edit box displayed. Note that this is the name you had specified as the name of iMate of the shaft.

6. Choose the inner edge of the circlip.

7. Accept the default settings for the rest of the options. Next, choose the **Apply** button and then the **Cancel** button to close the dialog box.

8. Save the model with the name *circlip.ipt* and then close the file.

Assembling the Circlip and the Shaft Using iMates

1. Start a new assembly file and choose the **Place** tool from the **Component** panel of the **Assemble** tab; the **Place Component** dialog box is displayed.



2. Place the component *shaft.ipt* in the graphics window.

3. Again, invoke the **Place Component** dialog box by choosing the **Place** tool from the **Assemble** tab.

4. Choose the **Automatically generate iMates on place** button from the **iMates** area of the **Place Component** dialog box.

5. Open the part file *circlip*; the circlip is automatically assembled with the shaft, as shown in Figure 17-45.

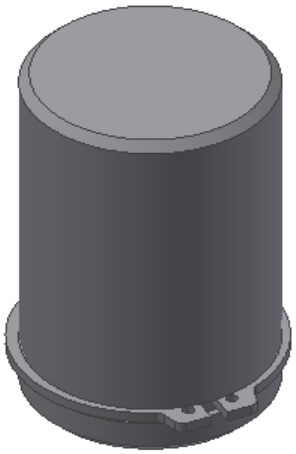

Figure 17-45 *Final model after applying the iMates*

6. Save the assembly with the name *iMate_assembly.iam* at the location given below:

C:\Inventor_2023\c17\Tutorial2

Self-Evaluation Test

Answer the following questions and then compare them to those given at the end of this chapter:

1. The **Scale** tool is used to resize the selected sketched entities with respect to the specified _____.

2. The triad of the Center of Gravity can be used for measuring _____.

3. You can specify the punching depth in the _____ area for creating a Sheet Metal Punch iFeature.

4. The file format of iFeature is _____.

5. You need to _____ the existing border before inserting a new type of border into a sheet.

6. When you open the required *.*ide* file, the _____ indicator is activated automatically for inserting the iFeature.

7. In Autodesk Inventor, you cannot find the Center of Gravity of an assembly in the drawing environment. (T/F)

8. The features created by using 2D sketches are known as placed features. (T/F)

9. iMates are used to place parts in their proper positions automatically. (T/F)

10. The **Translation** tab is available in the **Create iMate** dialog box. (T/F)

Review Questions

Answer the following questions:

1. Which of the following buttons from the **Place Component** dialog box is used to insert a component with matching iMates into an assembly?

   (a) **Create iMate** (b) **Interactively place with iMates**
   (c) **Create iFeature** (d) **Automatically generate iMates on place**

2. Which of the following tabs is used to calculate and display the physical and inertial properties of a part or an assembly?

   (a) **Physical** (b) **Summary**
   (c) **Project** (d) **Custom**

3. Which of the following environments is invoked when you choose the **Define New Title Block** option from the shortcut menu of the **Title Blocks** node?

   (a) Drawing (b) Part
   (c) Sketching (d) Assembly

4. Which of the following dialog boxes will be displayed if you choose the **Define New Zone Border** option from the shortcut menu that is displayed on right-clicking on the **Border** node?

   (a) **Border** (b) **Default Drawing Border Parameters**
   (c) **Title Block** (d) **Name**

5. When the **Size** indicator is activated, _____ will be displayed on the right pane of the **Insert iFeature** dialog box.

6. You cannot set the priority of the Mate reference in the **Create iMate** dialog box. (T/F)

7. There is only one button available in the **Selections** area of the **Create iMate** dialog box. (T/F)

8. A feature must include a center point for creating a Sheet Metal Punch iFeature. (T/F)

9. The **iProperties** dialog box can be used for creating reports, updating BOM, and updating title blocks. (T/F)

10. When you open an **.idw* file, the **Drawing Resources** folder is displayed in the **Browser Bar**. (T/F)

EXERCISE

Exercise 1

Create a Nut according to the dimensions shown in Figure 17-46. The threads of the Nut to be created are ANSI Metric M Profile with a size of 14 and M14X2 designation. Next, apply the iMate constraints on the Nut and bolt. For dimensions of the bolt, refer to Tutorial 2 of Chapter 8. Assemble both the nut and the bolt using the iMates. The final model is shown in Figure 17-47. **(Expected time: 45 min)**

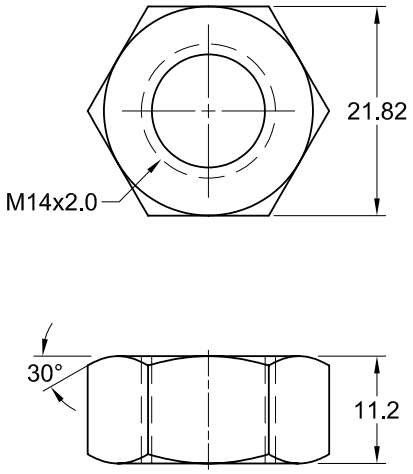

Figure 17-46 *Dimensions for creating the Nut*

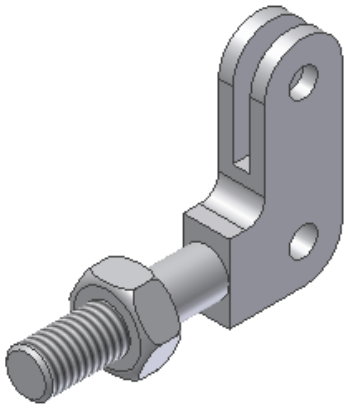

Figure 17-47 *Final assembly after applying the iMates*

Answers to Self-Evaluation Test

1. base point, **2.** distance, **3. Depth**, **4.** *.ide, **5.** delete, **6. Position**, **7.** F, **8.** F, **9.** T, **10.** F