Project 3

In this project, you will create components for a Angle Clamp assembly and then assemble them. You need to create all the components as separate part files. The views and dimensions of the components are shown in Figures P3-3 through P3-13. You can also download the model files for your reference from www.cadcim.com.

You can also download the model files for your reference from *www.cadcim.com*. To download the files, use the following path: *Textbooks > CAD/CAM > CATIA V5 > CATIA V5-6R2021 for Designers> Projects for Free Download > Project 3*

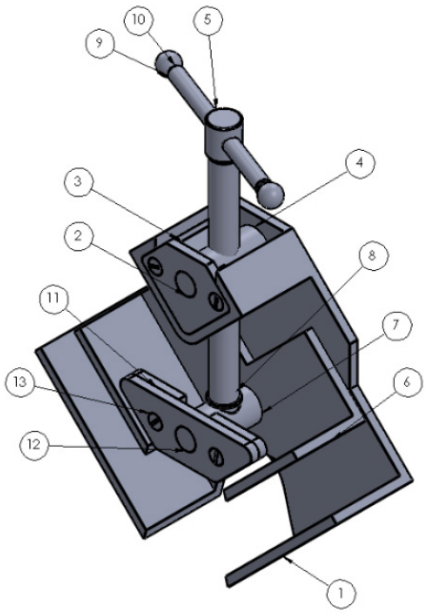

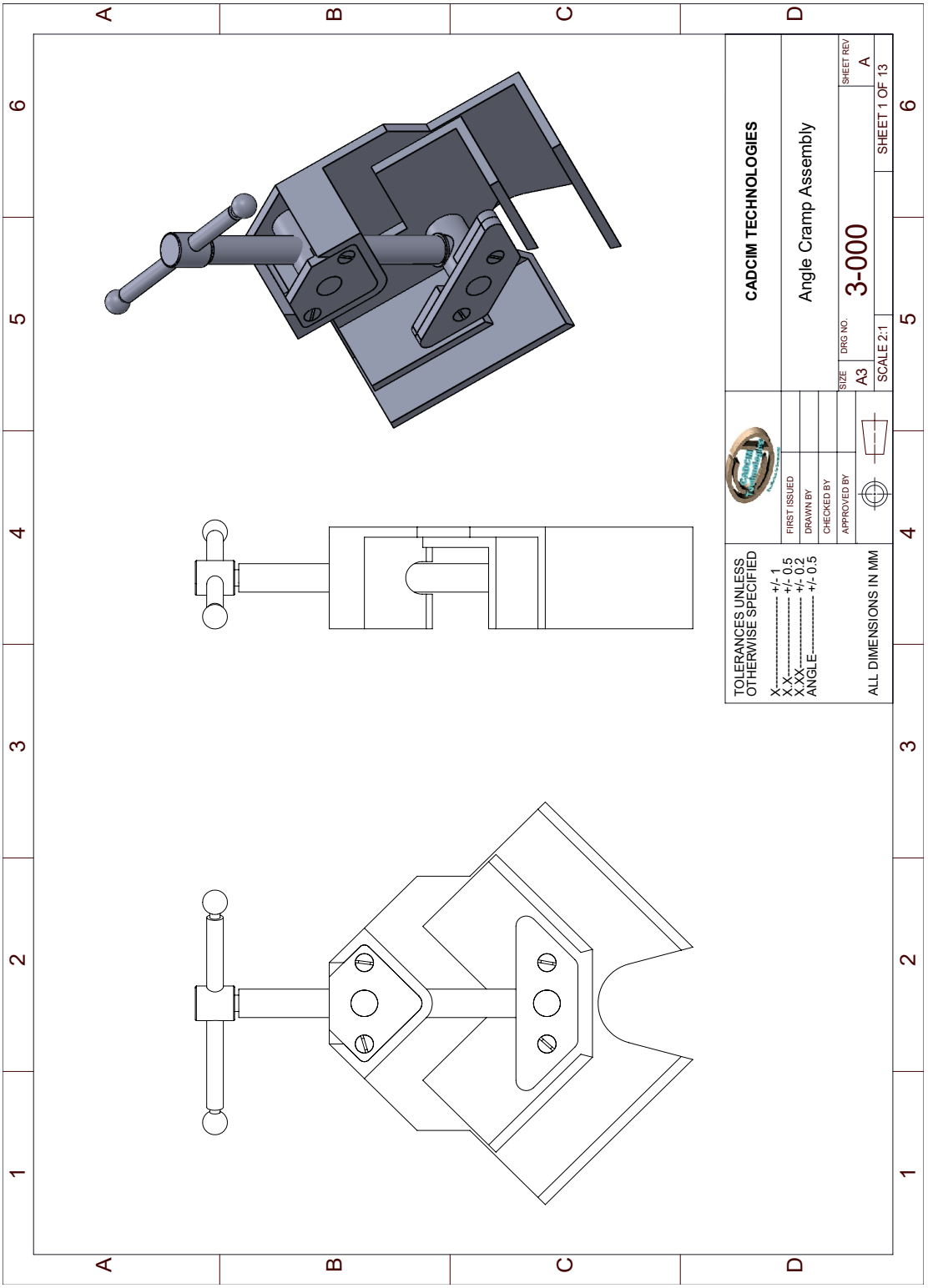
CADCIM TECHNOLOGIES
Angle Cramp Assembly
3-000
SIZE A3
DRG NO.
SHEET REV A
SCALE 2:1
SHEET 1 OF 13
FIRST ISSUED
DRAWN BY
CHECKED BY
APPROVED BY
TOLERANCES UNLESS OTHERWISE SPECIFIED
X +/- 1
X.X +/- 0.5
X.XX +/- 0.2
ANGLE +/- 0.5
ALL DIMENSIONS IN MM

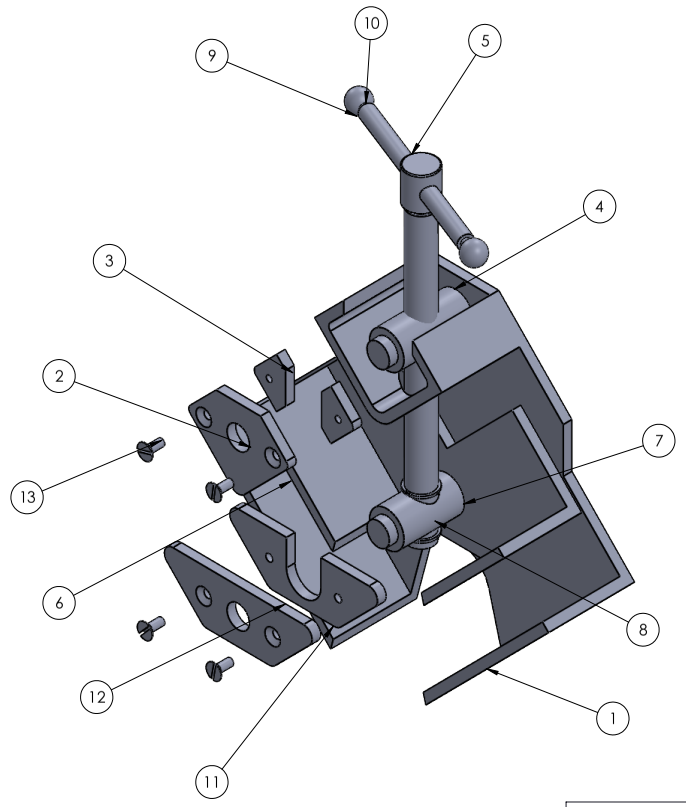

ITEM NO.	PART NUMBER	QTY.
1	Angle clamp Body	1
2	Clamp Cover	1
3	Clamp Insert	2
4	Rear Pin	1
5	Clamp Screw	1
6	Clamp	1
7	Front Pin	1
8	Snap ring	2
9	Clamp Rod	1
10	Clamp rod globes	2
11	Plate 1	1
12	Plate 2	1
13	M4x 0.7 Flat head slotted screw- ANSI B18.6.7M	4

TOLERANCES UNLESS OTHERWISE SPECIFIED

X---------- +/- 1
X.X---------- +/- 0.5
X.XX---------- +/- 0.2
ANGLE---------- +/- 0.5

ALL DIMENSIONS IN MM

FIRST ISSUED
DRAWN BY
CHECKED BY
APPROVED BY

CADCIM TECHNOLOGIES

Angle Clamp Exploded

SIZE A3 | DRG NO. 3-000 | SHEET REV A

SCALE 2:3 | SHEET 2 OF 13

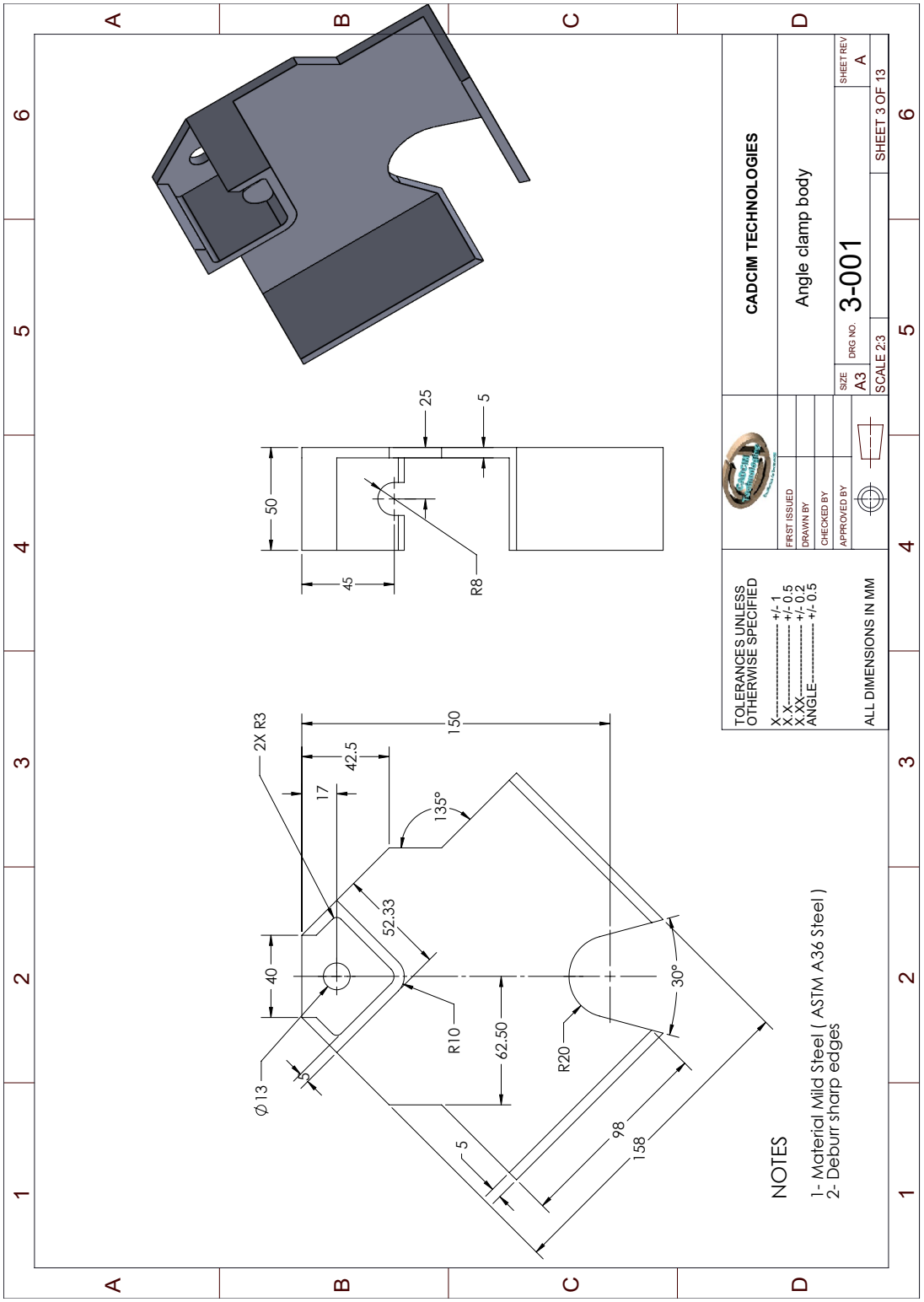
A
B
C
D
1
2
3
4
5
6
25
5
50
45
R8
2X R3
150
42.5
17
135°
52.33
40
R10
62.50
R20
30°
Ø13
5
98
158
5
NOTES
1- Material Mild Steel (ASTM A36 Steel)
2- Deburr sharp edges
TOLERANCES UNLESS OTHERWISE SPECIFIED
X ---------- +/- 1
X.X ---------- +/- 0.5
X.XX ---------- +/- 0.2
ANGLE ---------- +/- 0.5
ALL DIMENSIONS IN MM
FIRST ISSUED
DRAWN BY
CHECKED BY
APPROVED BY
CADCIM TECHNOLOGIES
Angle clamp body
SIZE A3
DRG NO. 3-001
SCALE 2:3
SHEET 3 OF 13
SHEET REV A

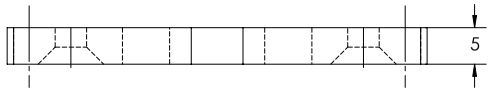

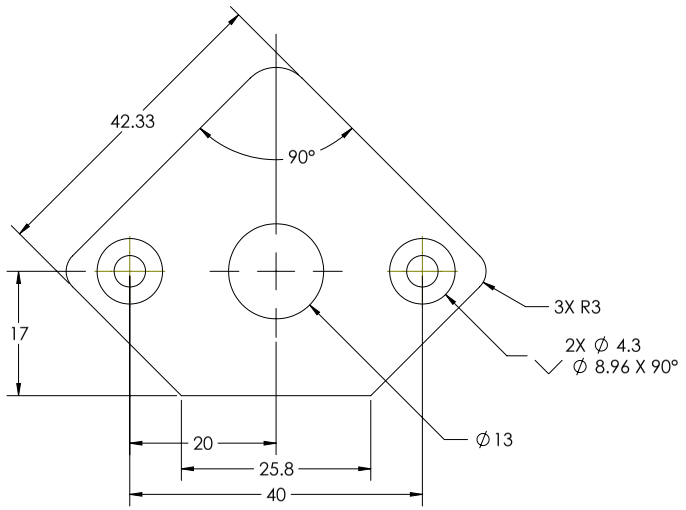

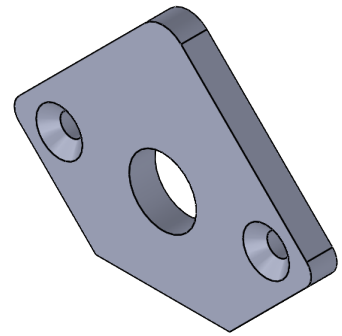

NOTES

1- Material Gray Cast Iron
2- Deburr sharp edges

TOLERANCES UNLESS OTHERWISE SPECIFIED X---------- +/- 1 X.X---------- +/- 0.5 X.XX---------- +/- 0.2 ANGLE---------- +/- 0.5 ALL DIMENSIONS IN MM	FIRST ISSUED DRAWN BY CHECKED BY APPROVED BY	CADCIM TECHNOLOGIES Clamp Cover SIZE A3 | DRG NO. 3-002 | SHEET REV A SCALE 2:1 | SHEET 4 OF 13

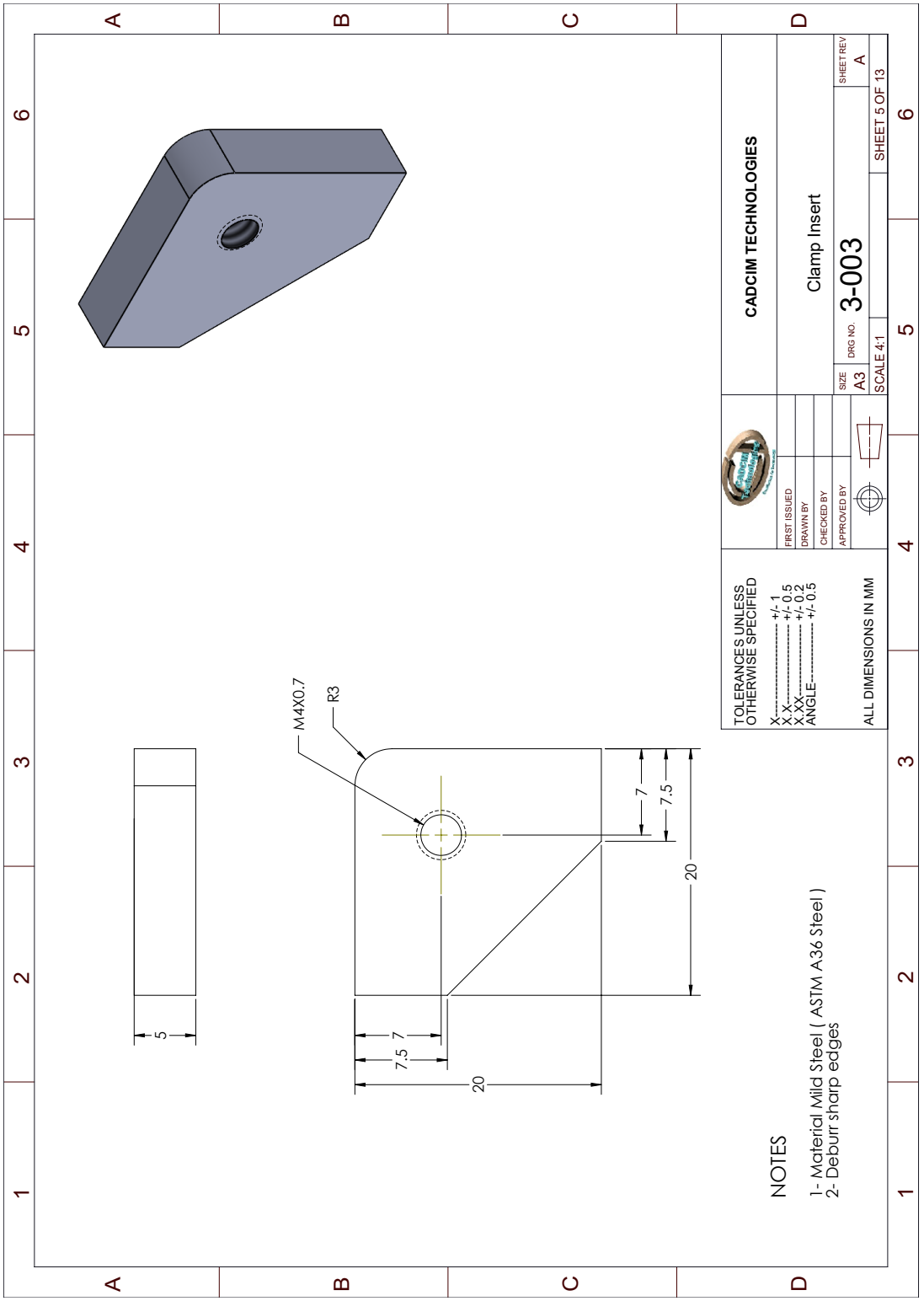
A
B
C
D
1
2
3
4
5
6
M4X0.7
R3
5
7
7.5
20
NOTES
1- Material Mild Steel (ASTM A36 Steel)
2- Deburr sharp edges
TOLERANCES UNLESS OTHERWISE SPECIFIED
X ---------- +/- 1
X.X ---------- +/- 0.5
X.XX ---------- +/- 0.2
ANGLE ---------- +/- 0.5
ALL DIMENSIONS IN MM
FIRST ISSUED
DRAWN BY
CHECKED BY
APPROVED BY
CADCIM TECHNOLOGIES
Clamp Insert
SIZE A3
DRG NO. 3-003
SCALE 4:1
SHEET 5 OF 13
SHEET 1 REV A

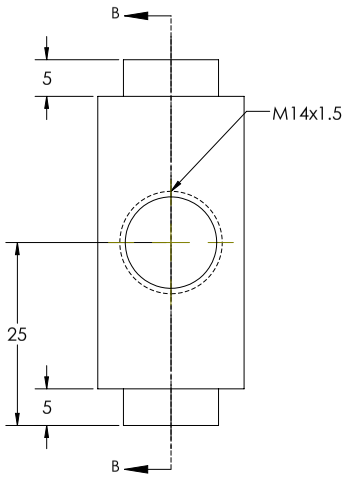

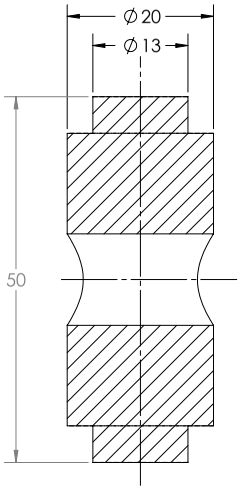

SECTION B-B

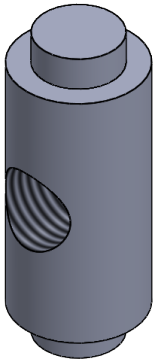

NOTES

1- Material Mild Steel (ASTM A36 Steel)
2- Deburr sharp edges

TOLERANCES UNLESS OTHERWISE SPECIFIED X---------- +/- 1 X.X---------- +/- 0.5 X.XX---------- +/- 0.2 ANGLE---------- +/- 0.5 ALL DIMENSIONS IN MM	FIRST ISSUED DRAWN BY CHECKED BY APPROVED BY	CADCIM TECHNOLOGIES Rear Pin SIZE A3 | DRG NO. 3-004 | SHEET REV A SCALE 2:1 | SHEET 6 OF 13

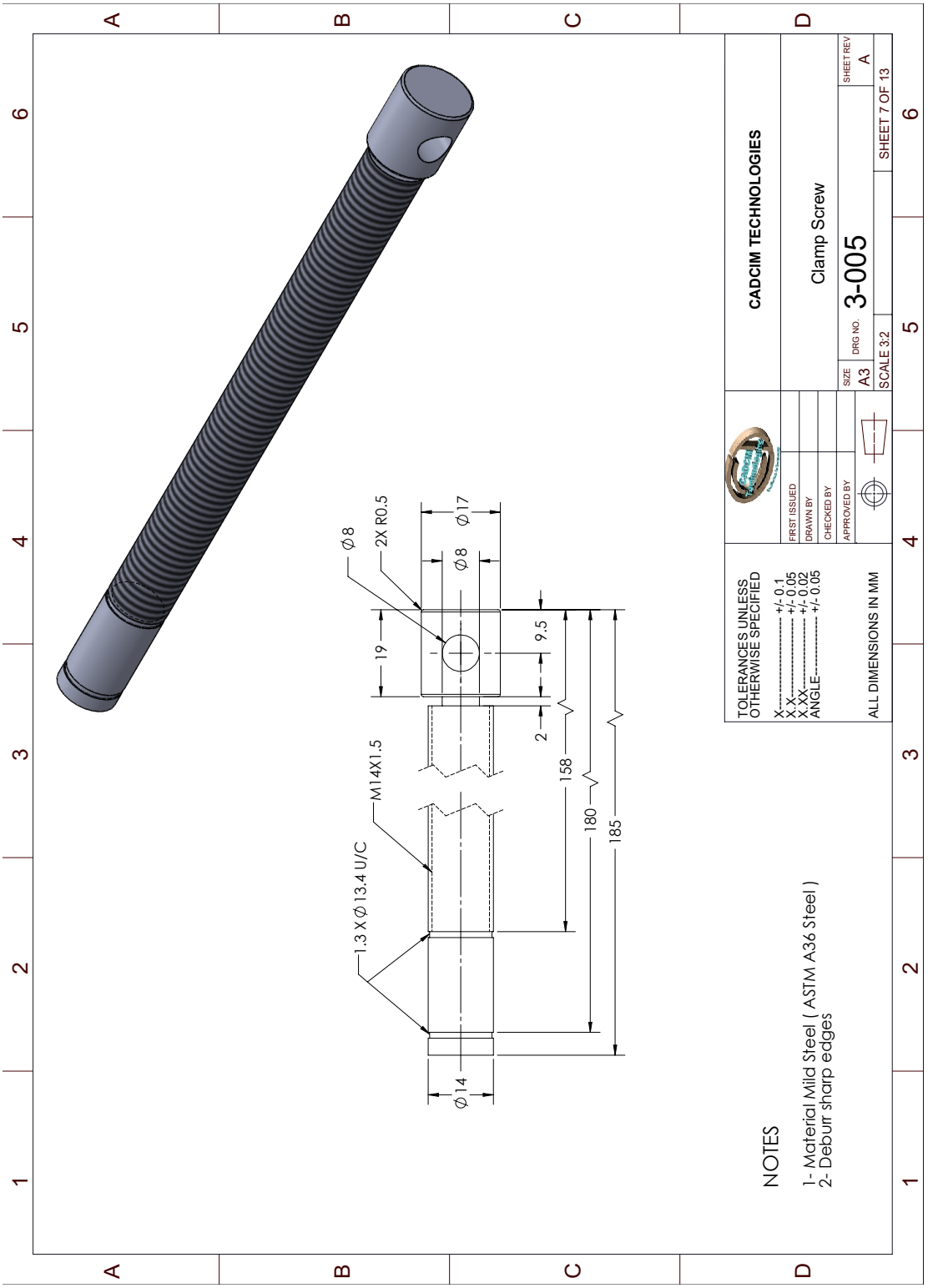
A
B
C
D
1
2
3
4
5
6
ϕ8
2X R0.5
ϕ17
ϕ8
19
9.5
2
158
180
185
M14X1.5
1.3 X ϕ 13.4 U/C
ϕ14
NOTES
1- Material Mild Steel (ASTM A36 Steel)
2- Deburr sharp edges
TOLERANCES UNLESS OTHERWISE SPECIFIED
X ---------- +/- 0.1
X.X ---------- +/- 0.05
X.XX ---------- +/- 0.02
ANGLE ---------- +/- 0.05
ALL DIMENSIONS IN MM
FIRST ISSUED
DRAWN BY
CHECKED BY
APPROVED BY
CADCIM TECHNOLOGIES
Clamp Screw
SIZE A3
DRG NO. 3-005
SHEET REV A
SCALE 3:2
SHEET 7 OF 13

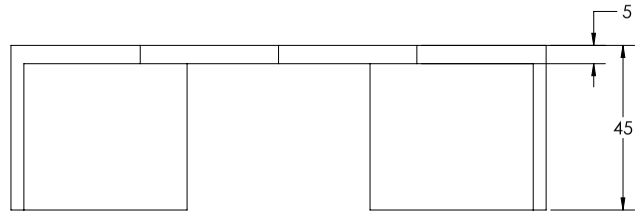

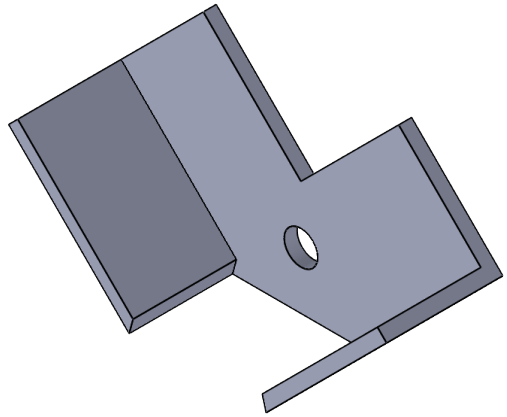

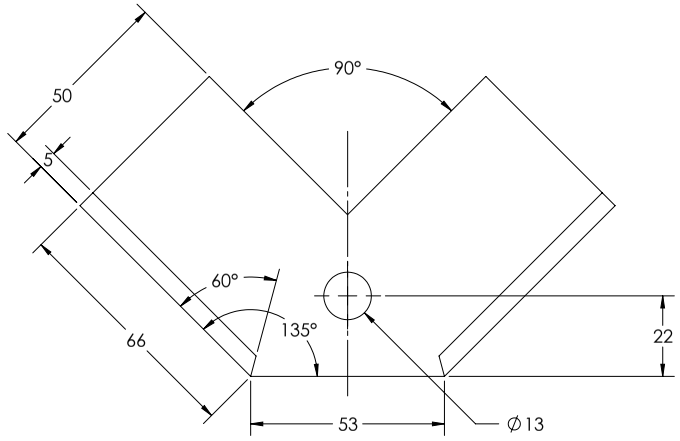

NOTES

1- Material Mild Steel (ASTM A36 Steel)
2- Deburr sharp edges

TOLERANCES UNLESS OTHERWISE SPECIFIED

X---------- +/- 1
X.X---------- +/- 0.5
X.XX---------- +/- 0.2
ANGLE---------- +/- 0.5

ALL DIMENSIONS IN MM

FIRST ISSUED	
DRAWN BY	
CHECKED BY	
APPROVED BY	

CADCIM TECHNOLOGIES

Clamp

SIZE	DRG NO.	SHEET REV
A3	3-006	A

SCALE 1:1 | SHEET 8 OF 13

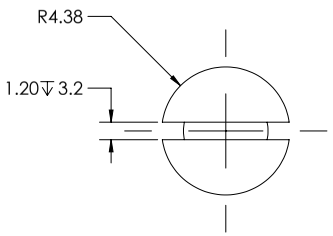

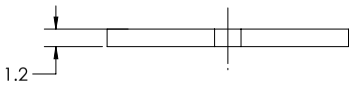

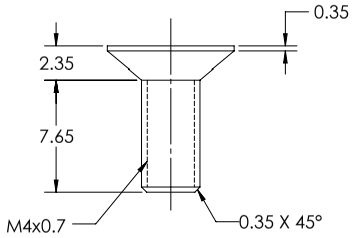

M4 X0.7 Screw

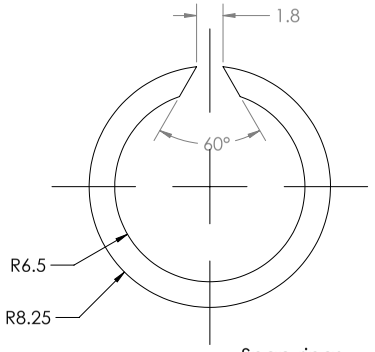

Snap rings

NOTES

1- Material Stainless Steel
2- Deburr sharp edges

ALL DIMENSIONS IN MM		CADCIM TECHNOLOGIES
	FIRST ISSUED	1. M4 X0.7 flat head Slotted Screw- ANSI B18.6.7M
	DRAWN BY	2. Snap ring
	CHECKED BY	
	APPROVED BY	SIZE A3 | DRG NO. 3-007 | SHEET REV A
		SCALE 4:1 | SHEET 9 OF 15

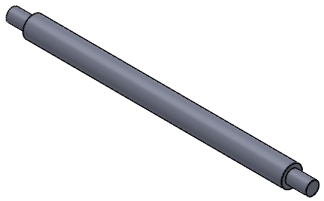

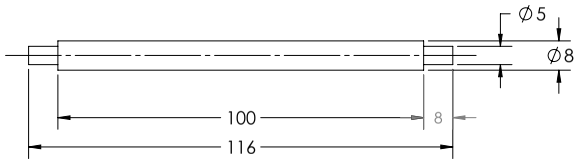

Clamp rod



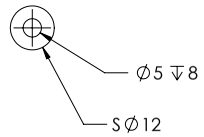

Clamp rod globes

NOTES

1- Material Gray Cast Iron
2- Deburr sharp edges

TOLERANCES UNLESS OTHERWISE SPECIFIED X---------- +/- 1 X.X---------- +/- 0.5 X.XX---------- +/- 0.2 ANGLE---------- +/- 0.5 ALL DIMENSIONS IN MM	FIRST ISSUED DRAWN BY CHECKED BY APPROVED BY	CADCIM TECHNOLOGIES 1. Clamp rod 2. Clamp rod globes SIZE A3 | DRG NO. 3-008 | SHEET REV A SCALE 1:1 | SHEET 10 OF 13

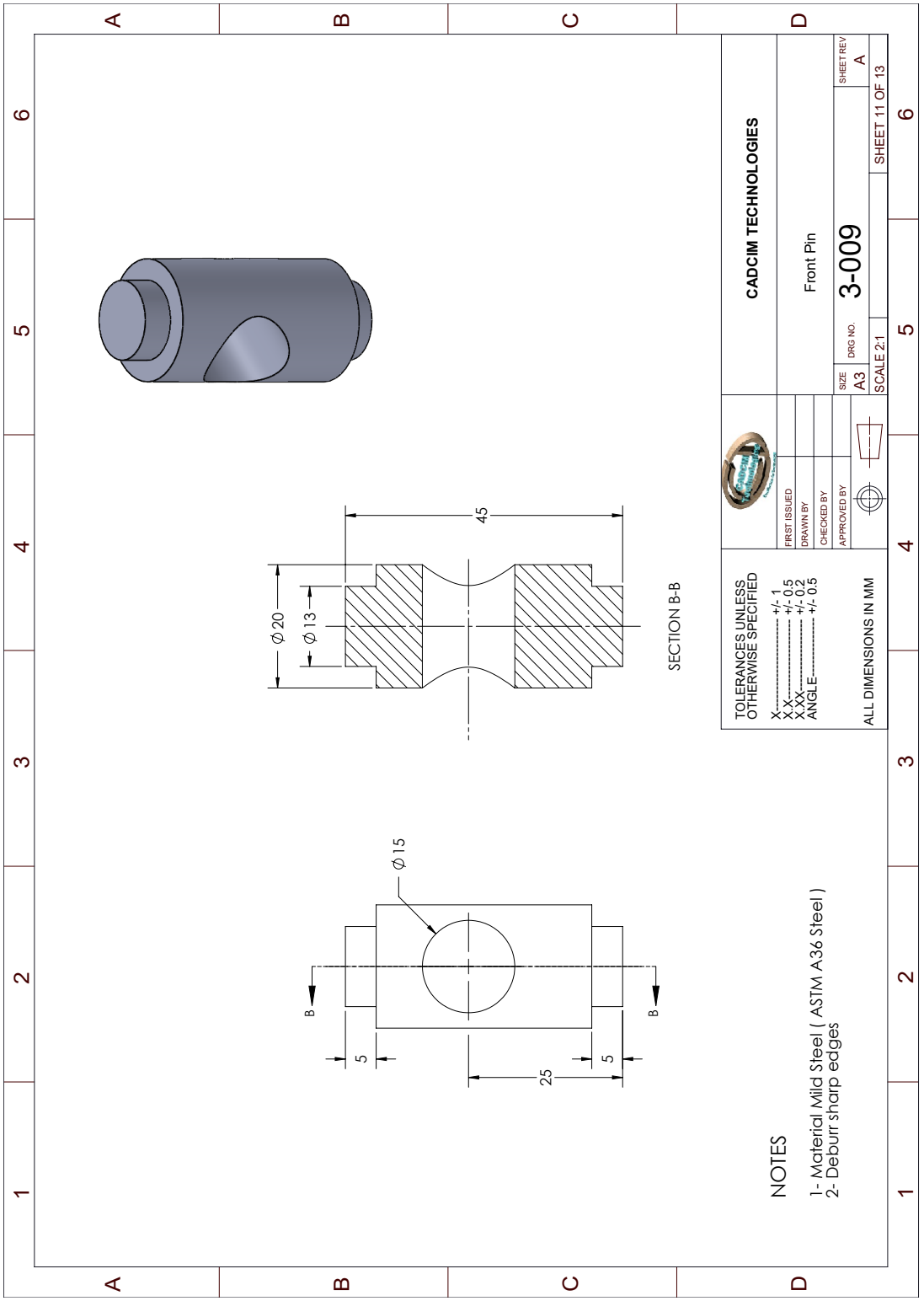
CADCIM TECHNOLOGIES
Front Pin
3-009
SIZE A3
DRG NO.
SCALE 2:1
SHEET REV A
SHEET 11 OF 13
FIRST ISSUED
DRAWN BY
CHECKED BY
APPROVED BY
TOLERANCES UNLESS OTHERWISE SPECIFIED
X---------- +/- 1
X.X---------- +/- 0.5
X.XX---------- +/- 0.2
ANGLE---------- +/- 0.5
ALL DIMENSIONS IN MM
45
Ø 20
Ø 13
SECTION B-B
Ø 15
B
B
5
25
5
NOTES
1- Material Mild Steel (ASTM A36 Steel)
2- Deburr sharp edges

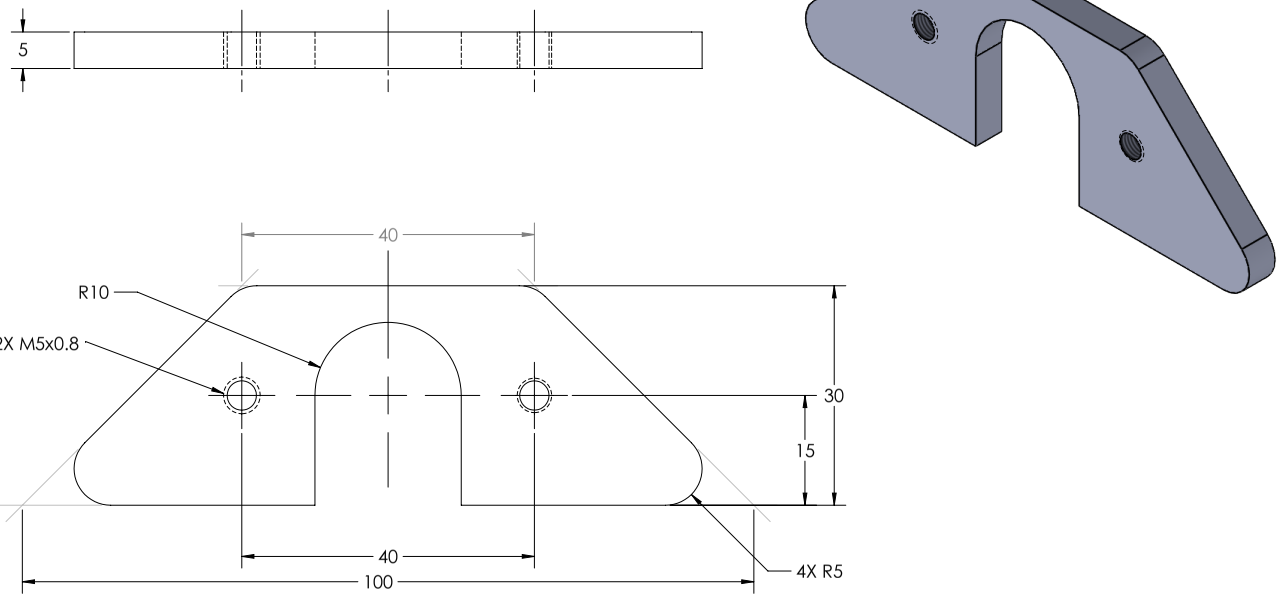

NOTES

1- Material Mild Steel (ASTM A36 Steel)
2- Deburr sharp edges

TOLERANCES UNLESS OTHERWISE SPECIFIED X---------- +/- 1 X.X---------- +/- 0.5 X.XX---------- +/- 0.2 ANGLE---------- +/- 0.5 ALL DIMENSIONS IN MM	CADCIM TECHNOLOGIES
FIRST ISSUED	
DRAWN BY	Plate 1
CHECKED BY	
APPROVED BY	SIZE A3 · DRG NO. 3-010 · SHEET REV A
	SCALE 2:1 · SHEET 12 OF 13

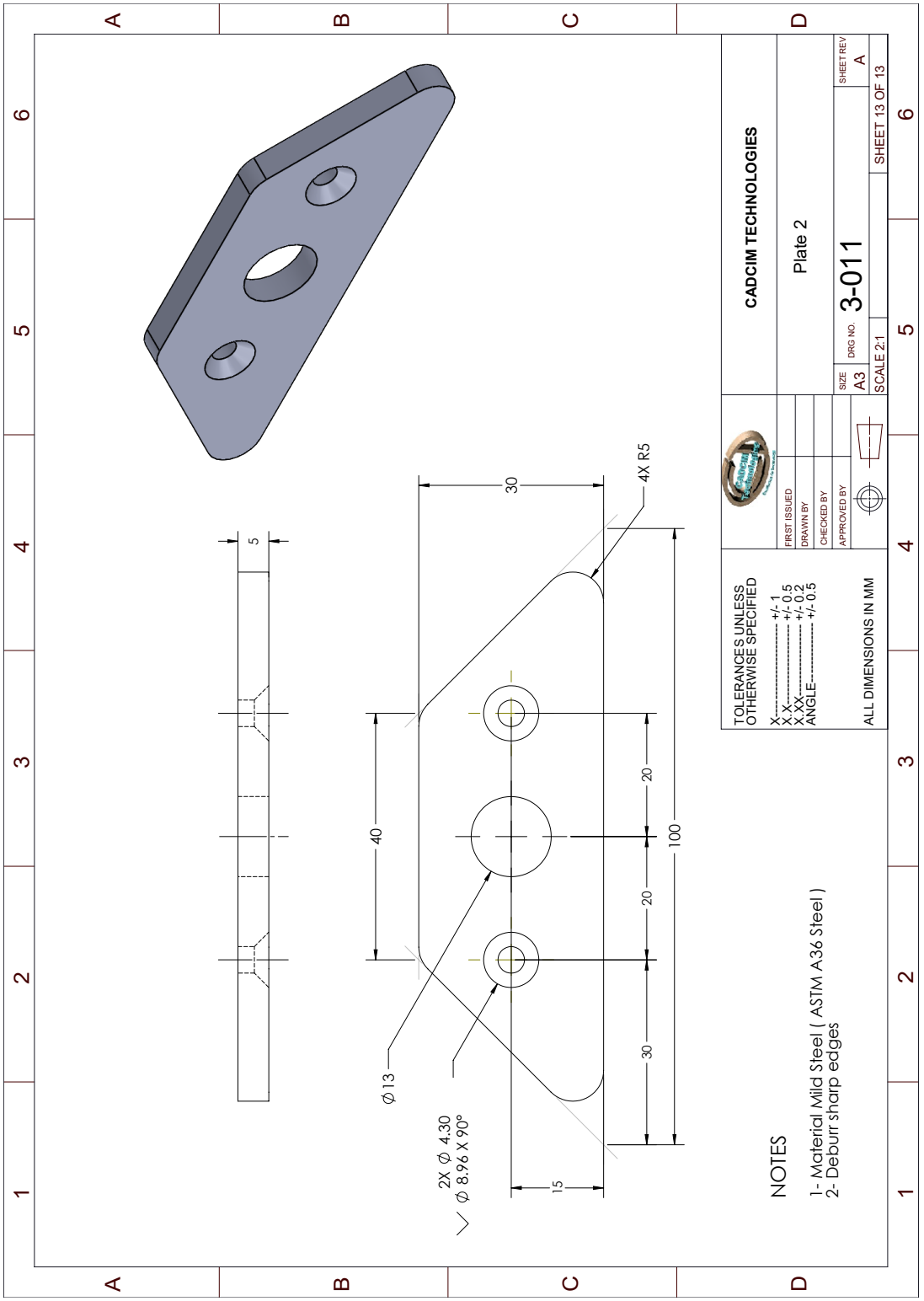
A
B
C
D
1
2
3
4
5
6
5
30
4X R5
40
20
20
30
100
15
Ø 13
2X Ø 4.30
Ø 8.96 X 90°
NOTES
1- Material Mild Steel (ASTM A36 Steel)
2- Deburr sharp edges
TOLERANCES UNLESS OTHERWISE SPECIFIED
X ---------- +/- 1
X.X ---------- +/- 0.5
X.XX ---------- +/- 0.2
ANGLE ---------- +/- 0.5
ALL DIMENSIONS IN MM
FIRST ISSUED
DRAWN BY
CHECKED BY
APPROVED BY
CADCIM TECHNOLOGIES
Plate 2
SIZE A3
DRG NO. 3-011
SCALE 2:1
SHEET 13 OF 13
SHEET REV A