Project 3

Angle Clamp Assembly

In this project, you will create components for a Angle Clamp assembly and then assemble them. You need to create all the components as separate part files. The views and dimensions of the components are shown in Figures P3-3 through P3-13.

You can also download the model files for your reference from *www.cadcim.com*. To download the files, use the following path: *Textbooks > CAD/CAM > Solid Edge > Solid Edge 2022 for Designers > Projects for Free Download > Project 3*

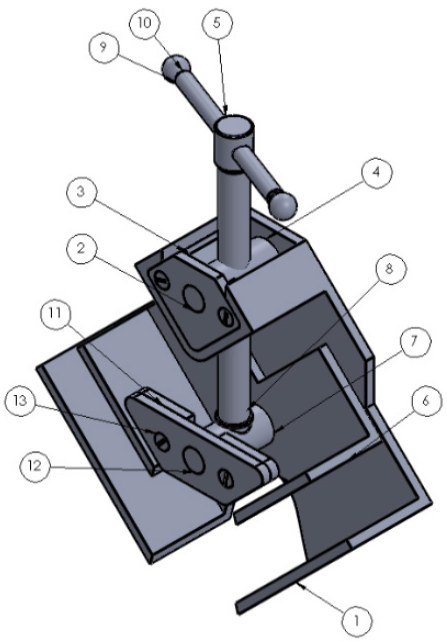

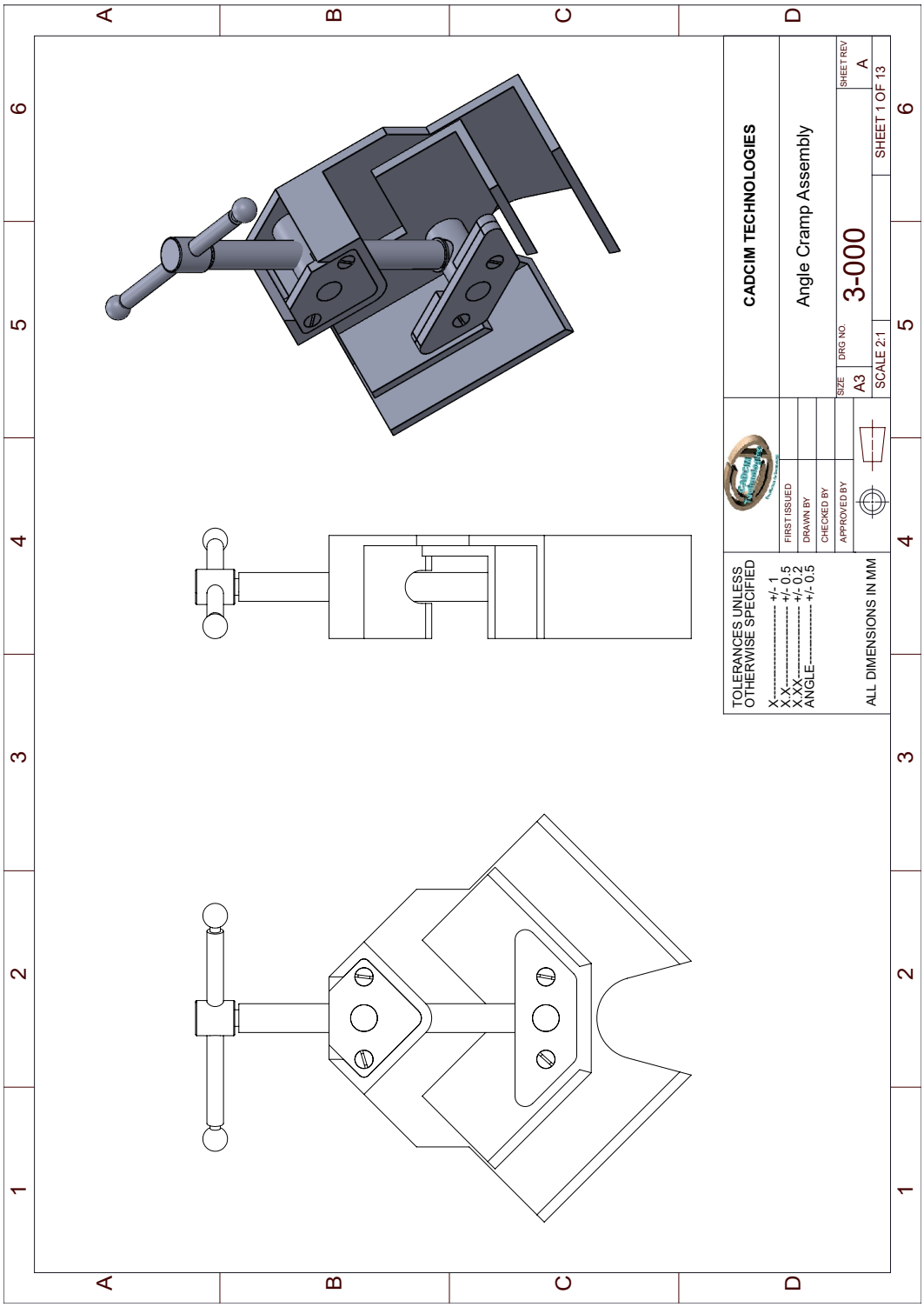

Figure P3-1 *The Angle Clamp assembly*

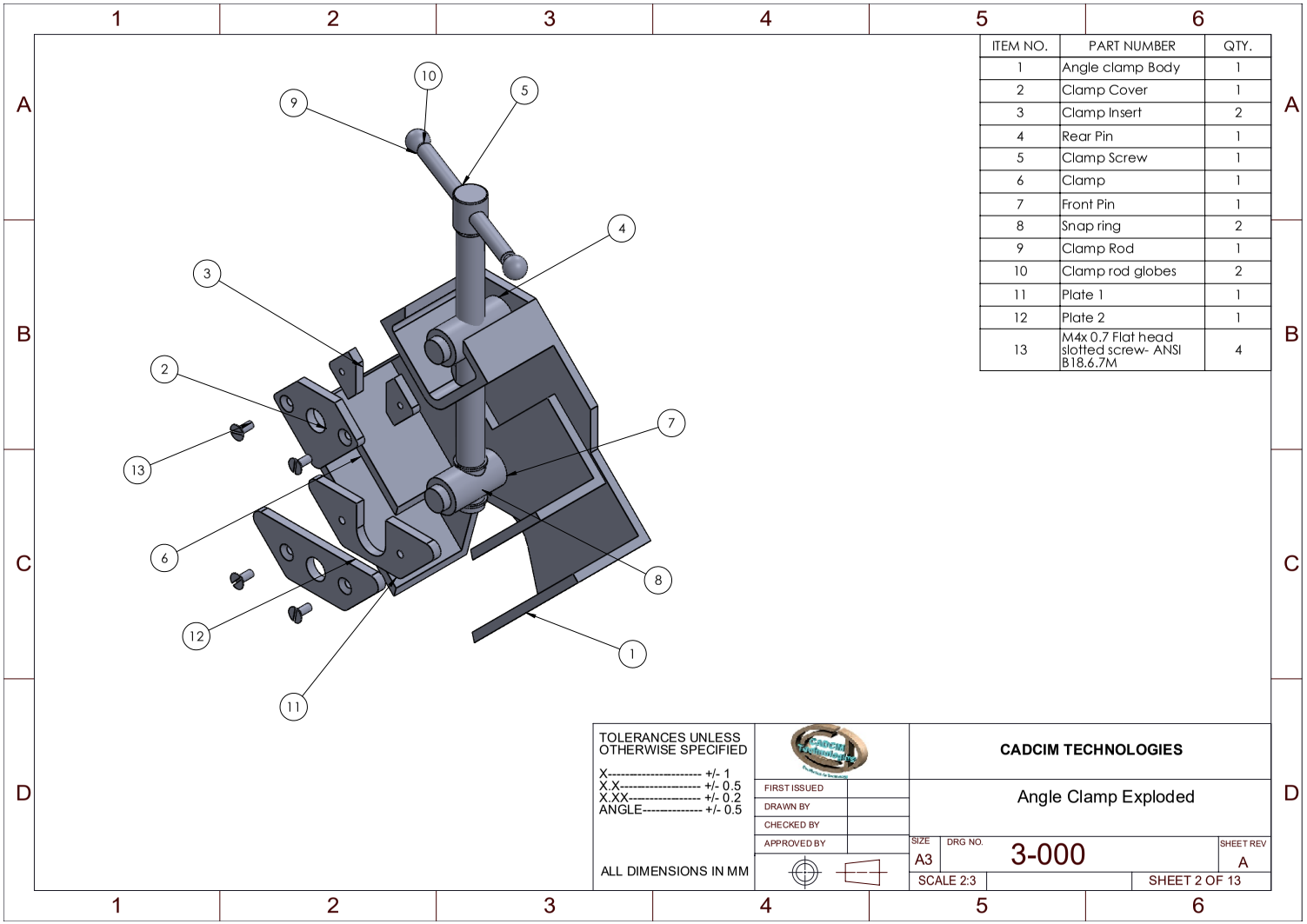

Figure P3-2 *The exploded view of Angle Clamp assembly*

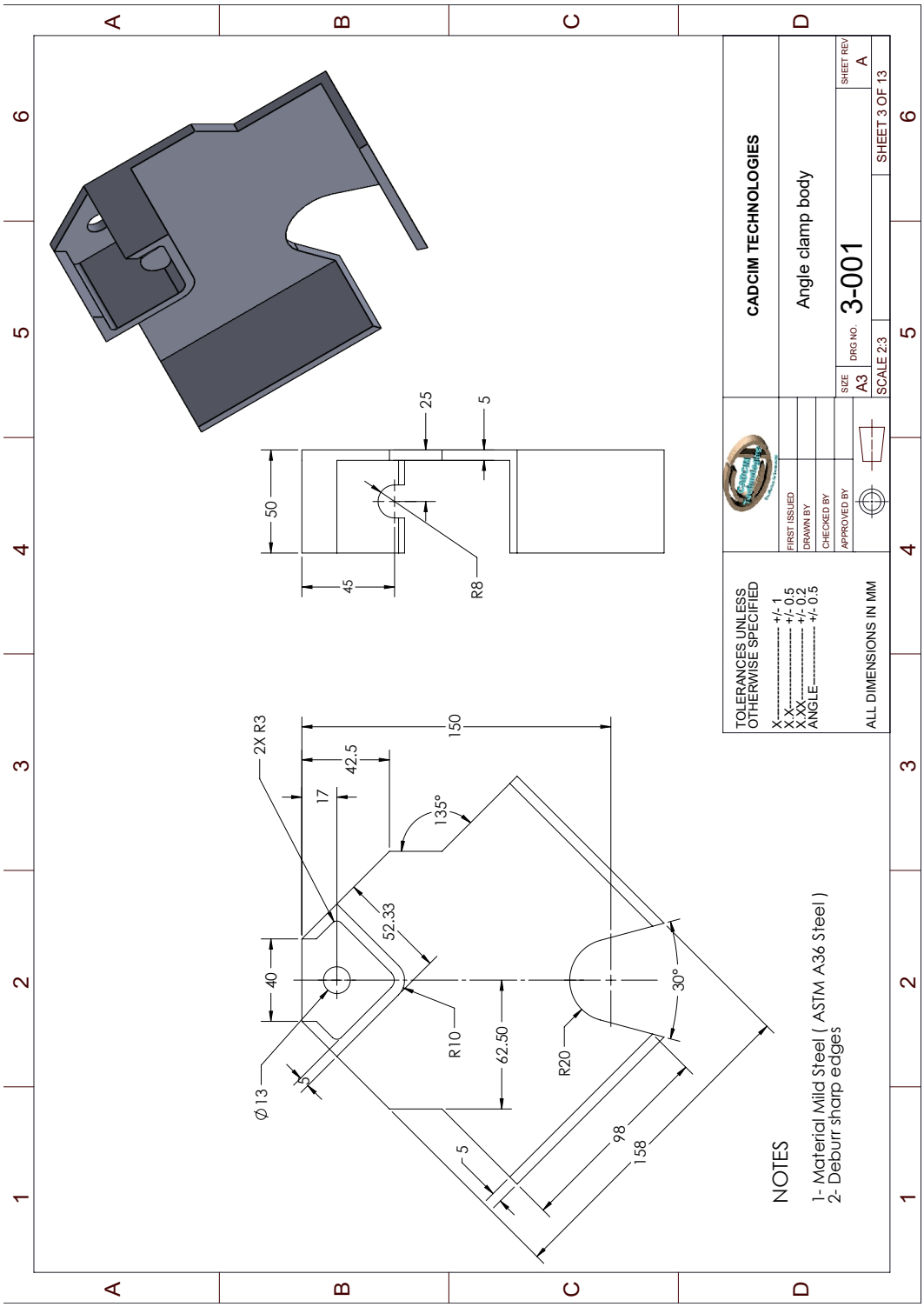

Figure P3-3 *Views and dimensions of Angle Clamp Body*

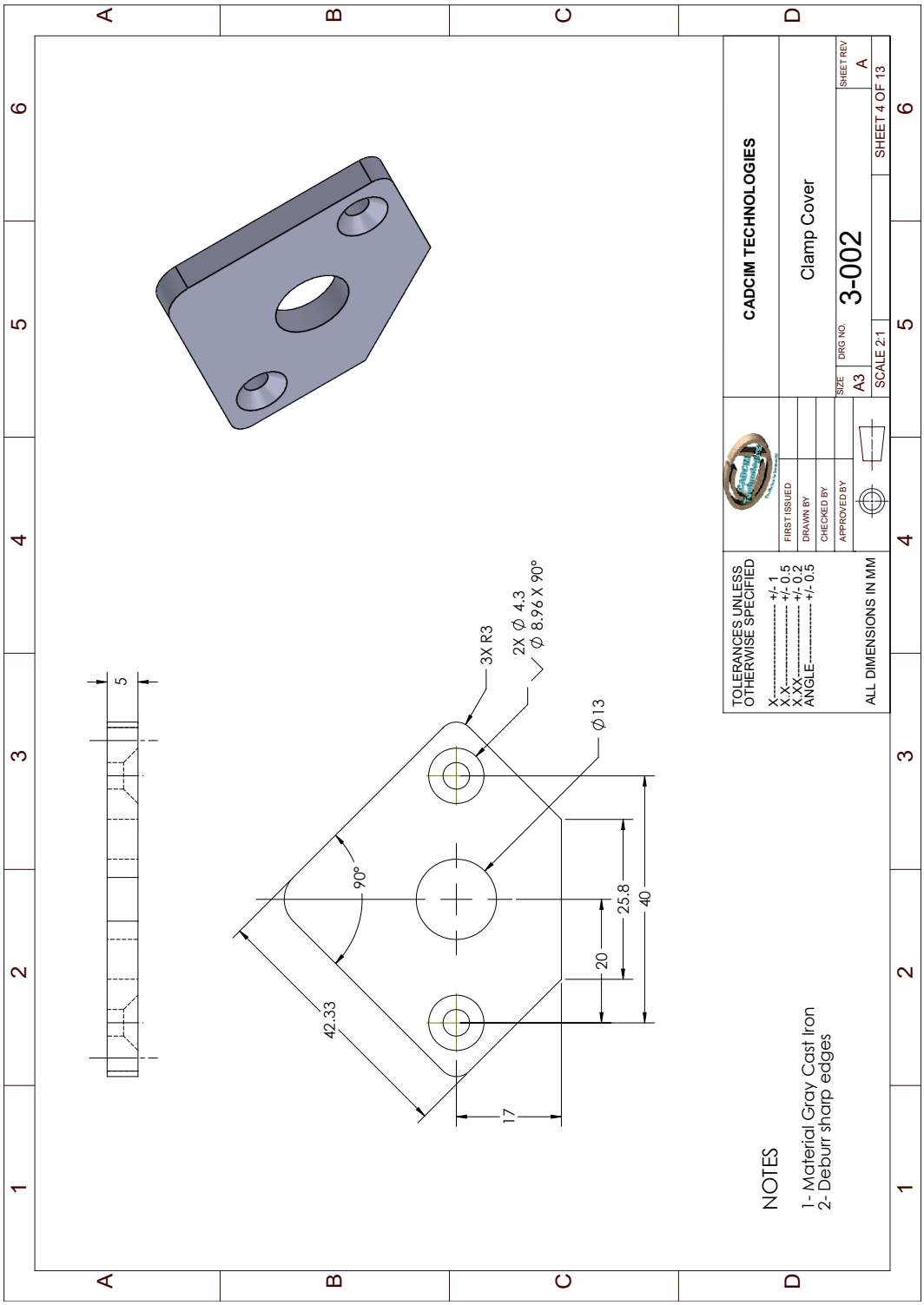

Figure P3-4 *Views and dimensions of Clamp Cover*

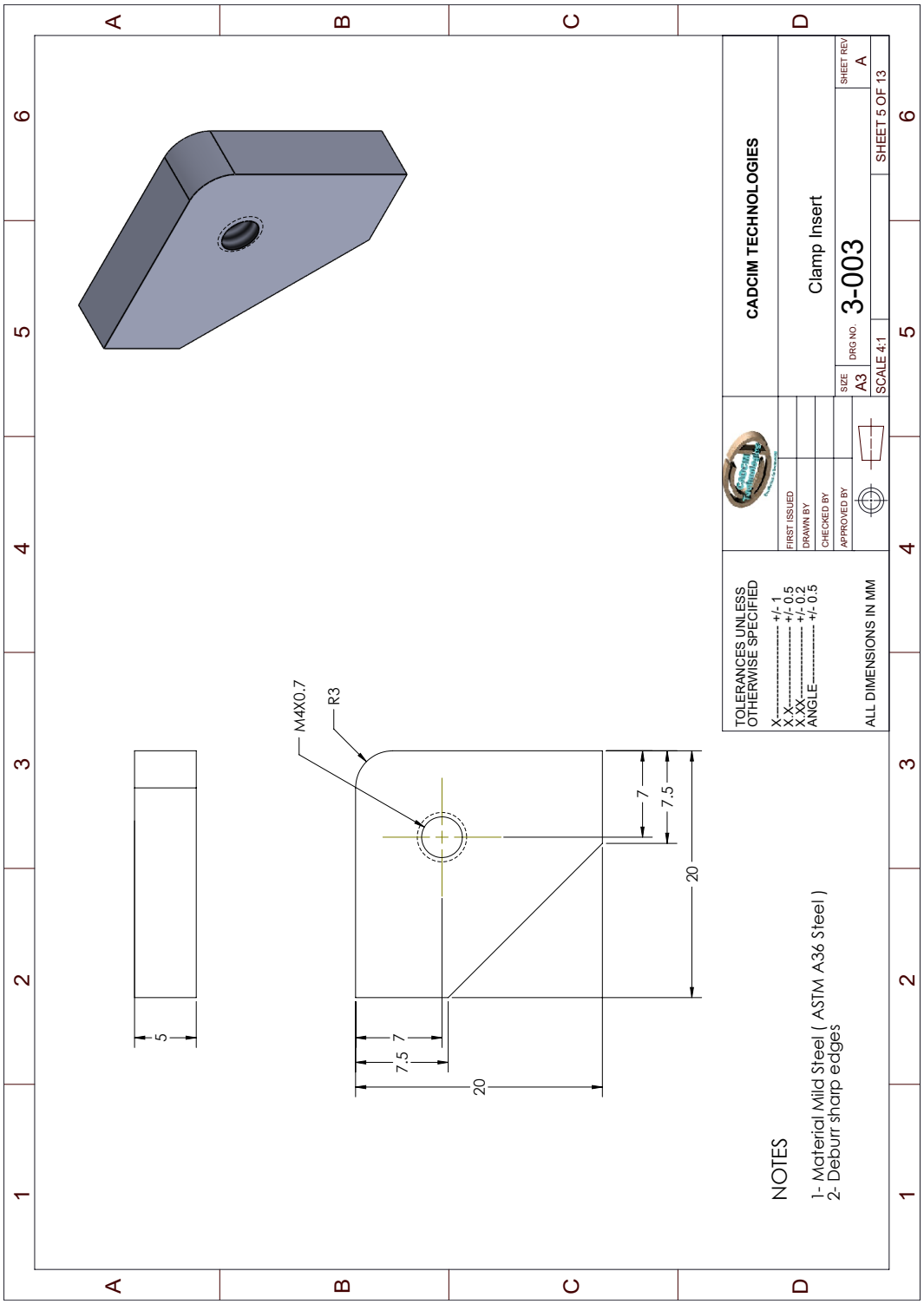

Figure P3-5 *Views and dimensions of Clamp Insert*

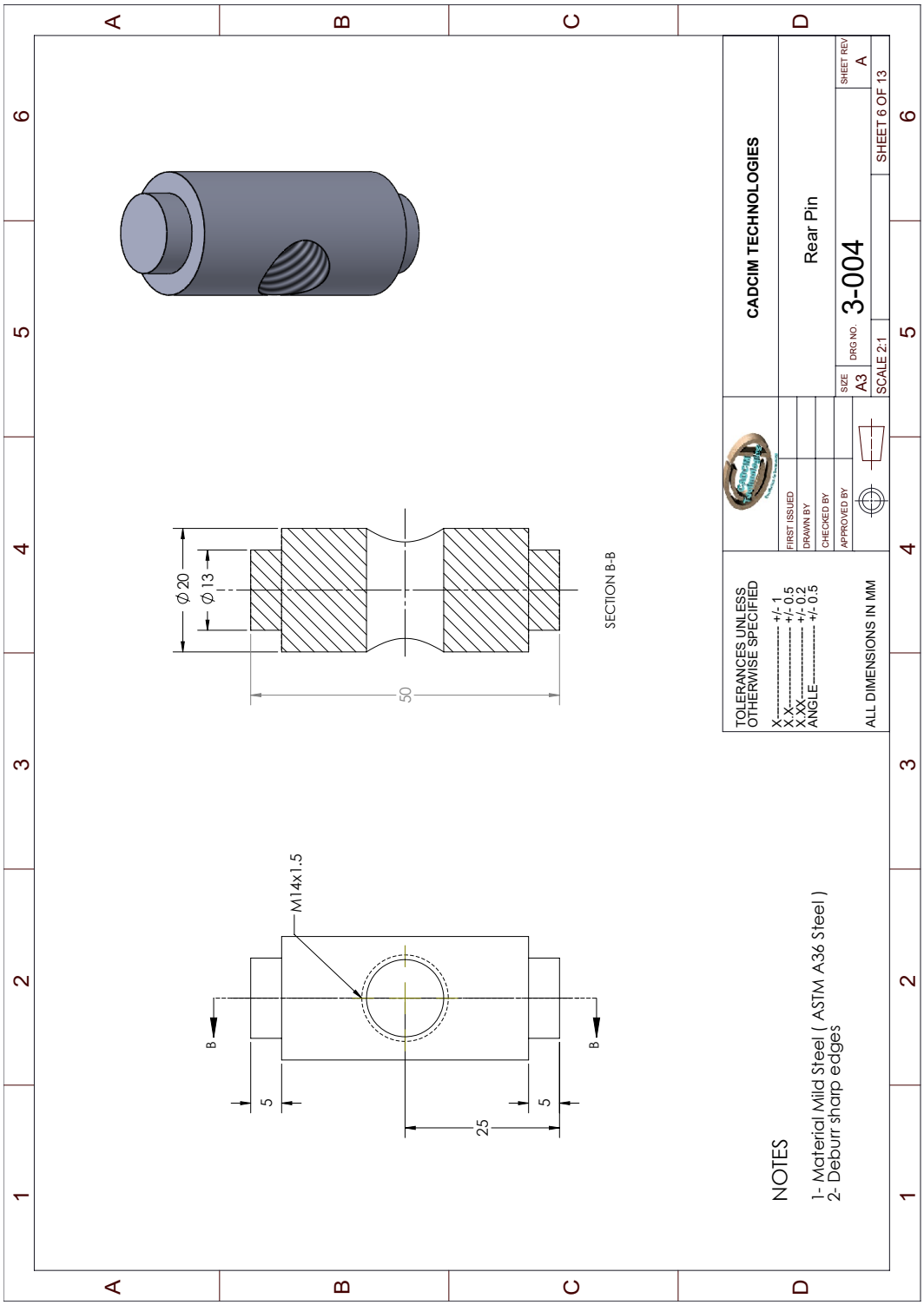

Figure P3-6 *Views and dimensions of Rear Pin*

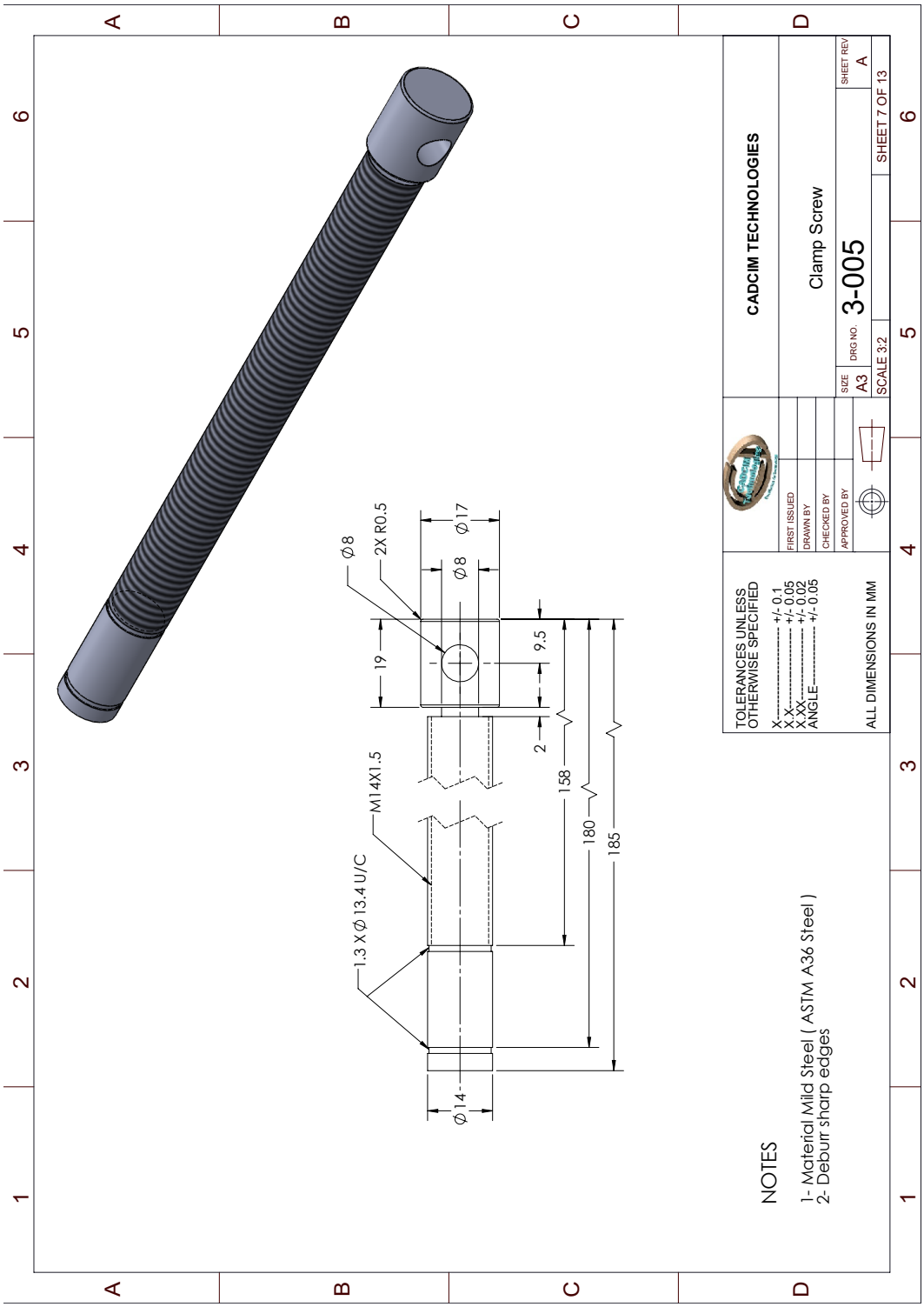

Figure P3-7 *Views and dimensions of Clamp Screw*

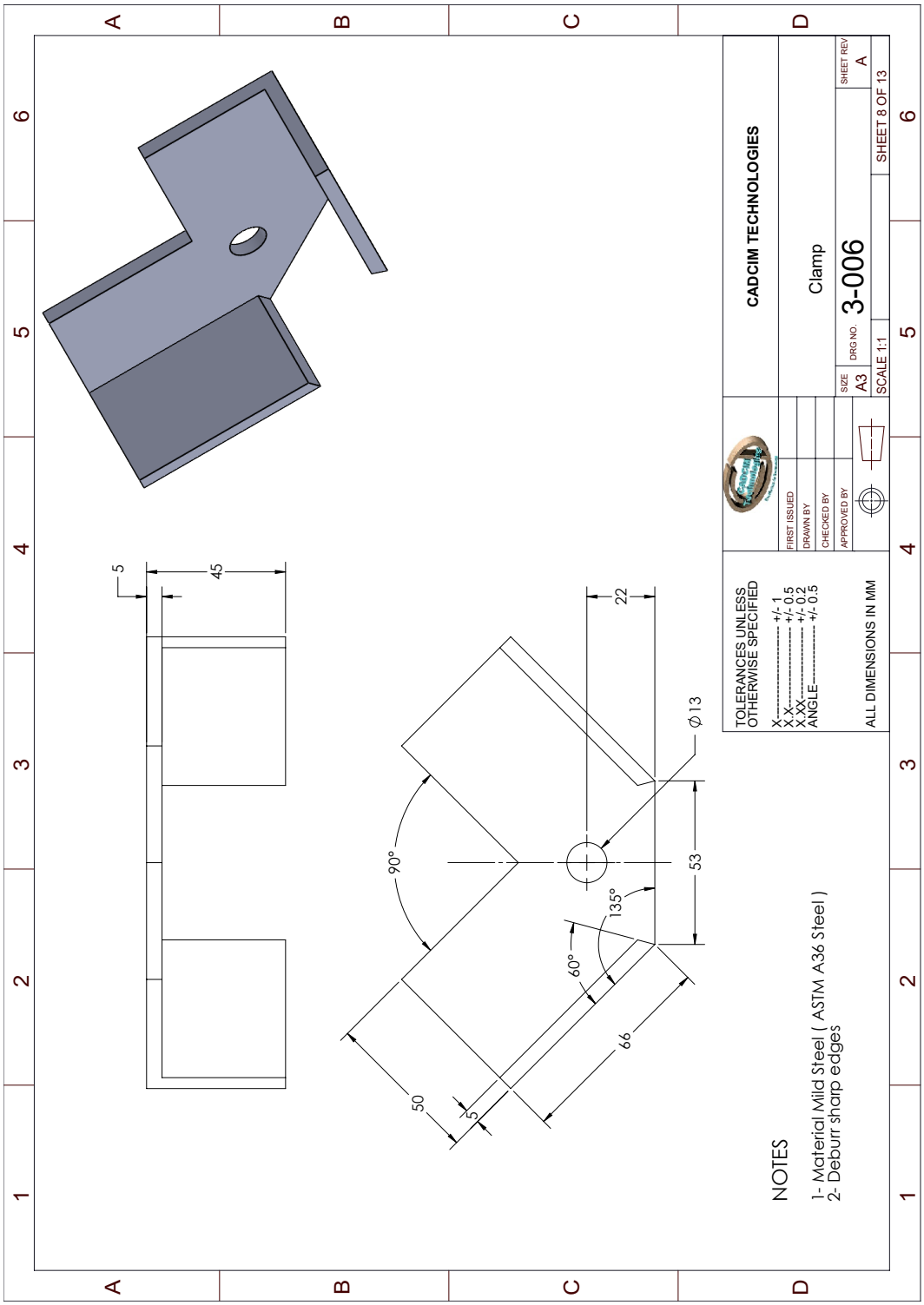

Figure P3-8 *Views and dimensions of Clamp*

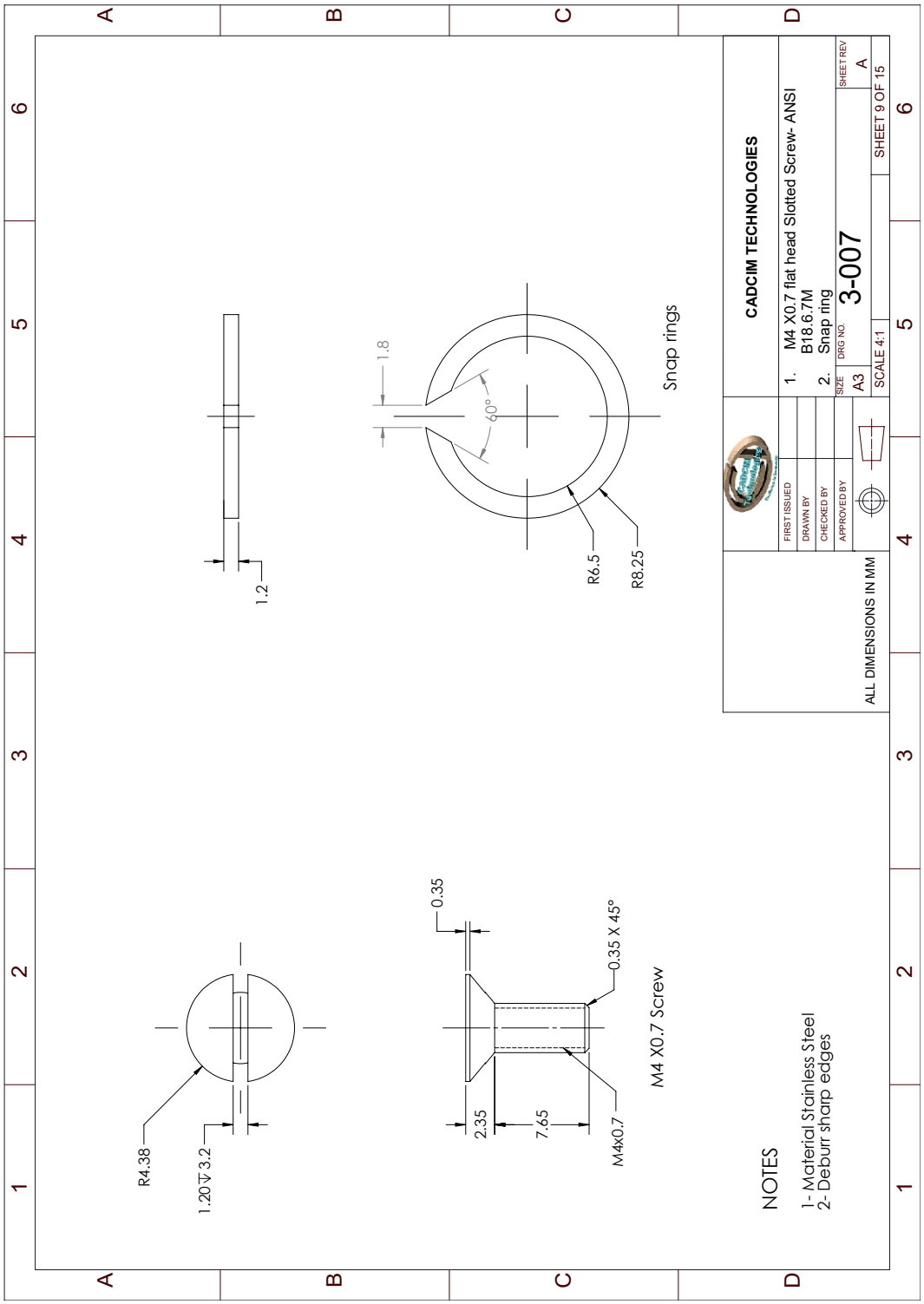

Figure P3-9 *Views and dimensions of M4 X 0.7 flat head slotted screw*

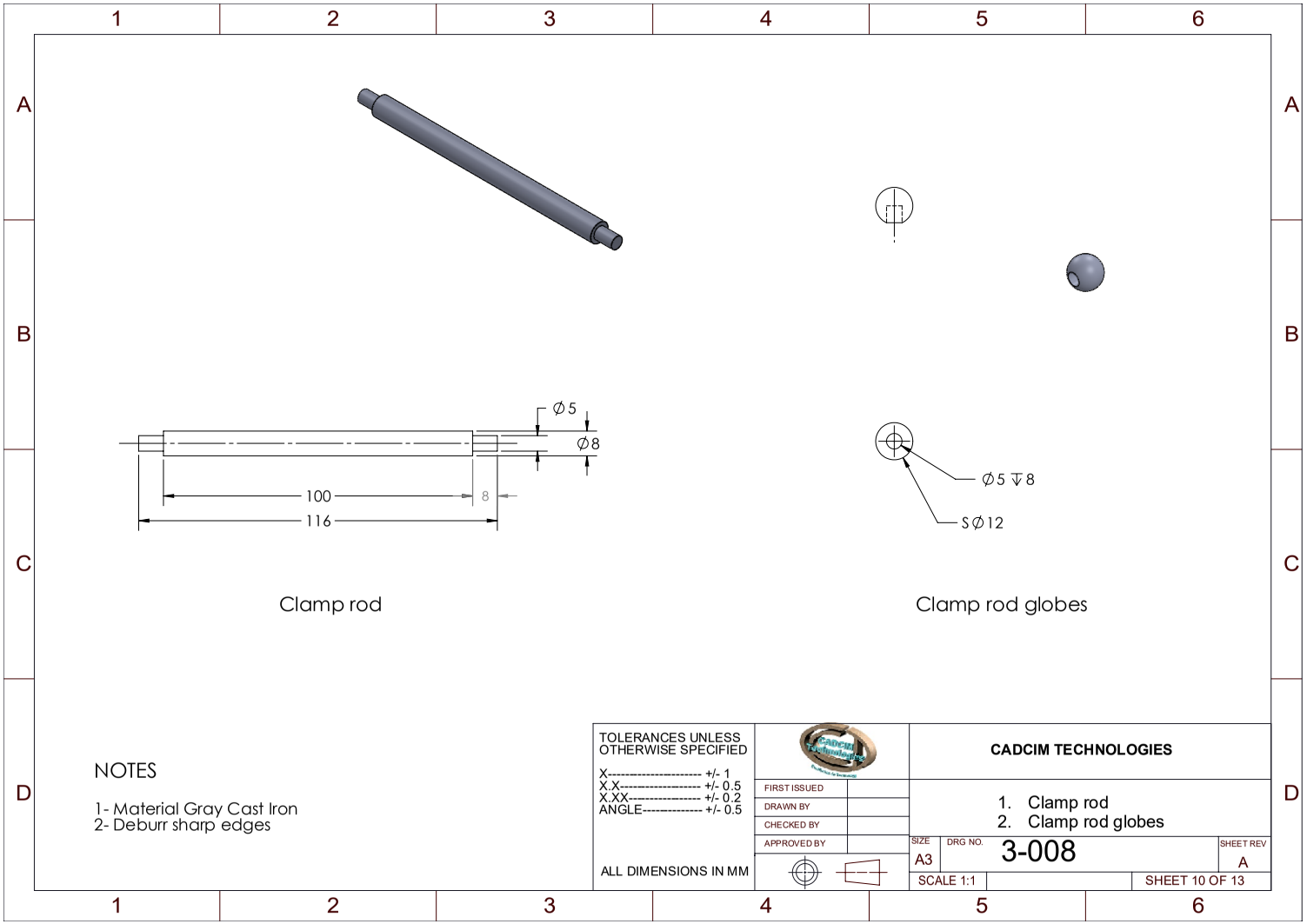

Figure P3-10 *Views and dimensions of Clamp Rod and Clamp Rod Globes*

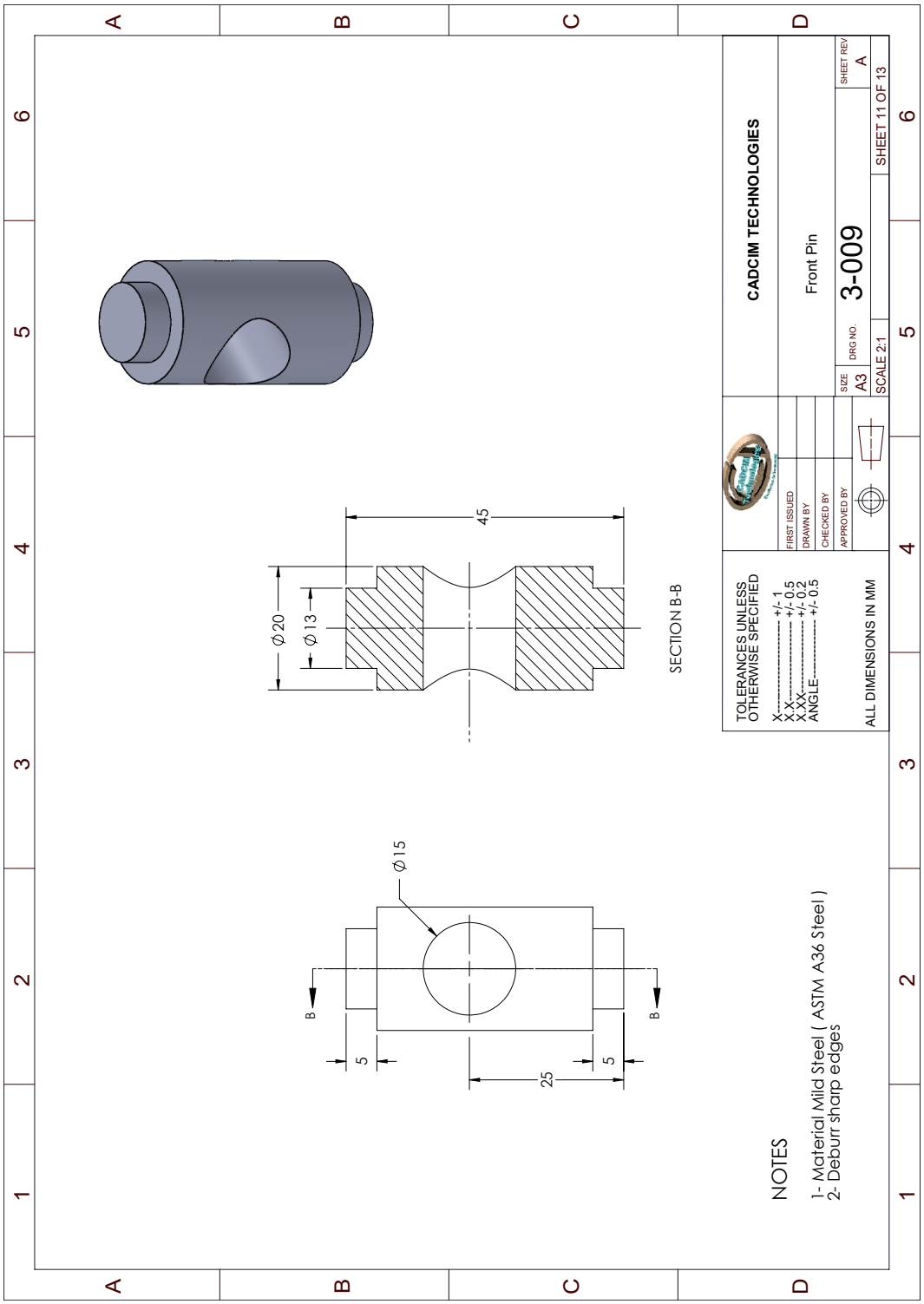

Figure P3-11 *Views and dimensions of Front Pin*

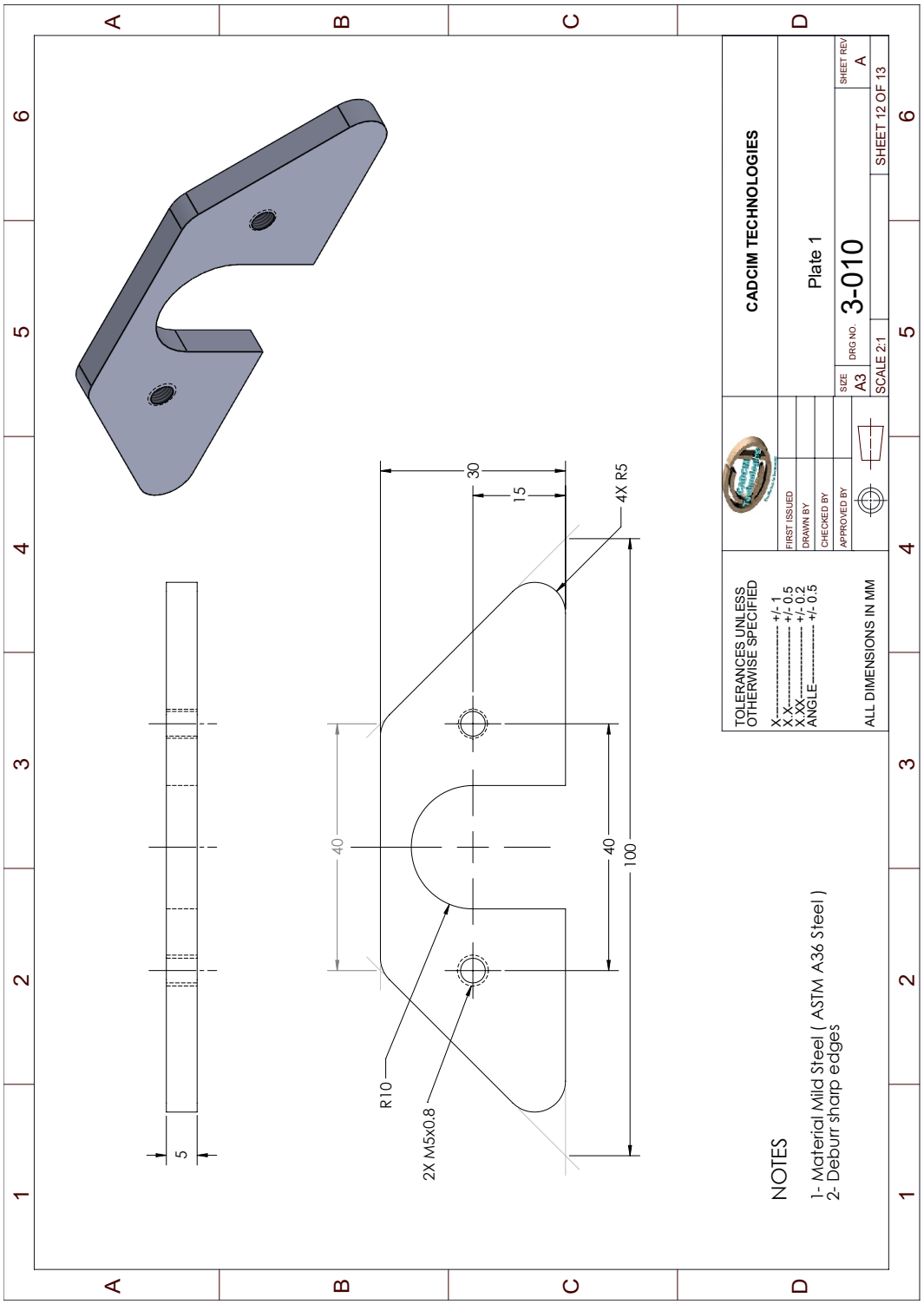

Figure P3-12 *Views and dimensions of Plate 1*

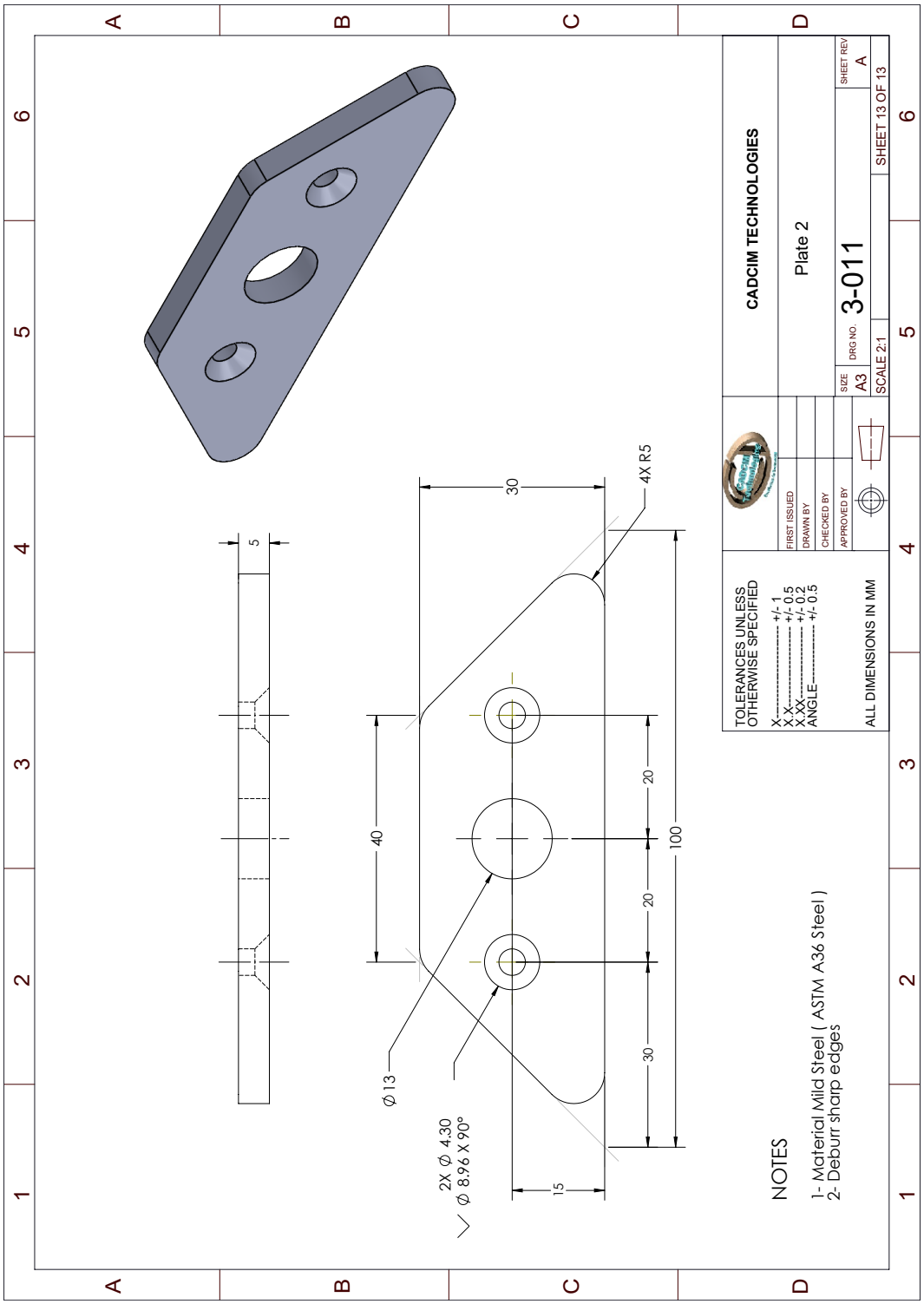

Figure P3-13 *Views and dimensions of Plate 2*