Chapter 3

Adding Relationships and Dimensions to Sketches

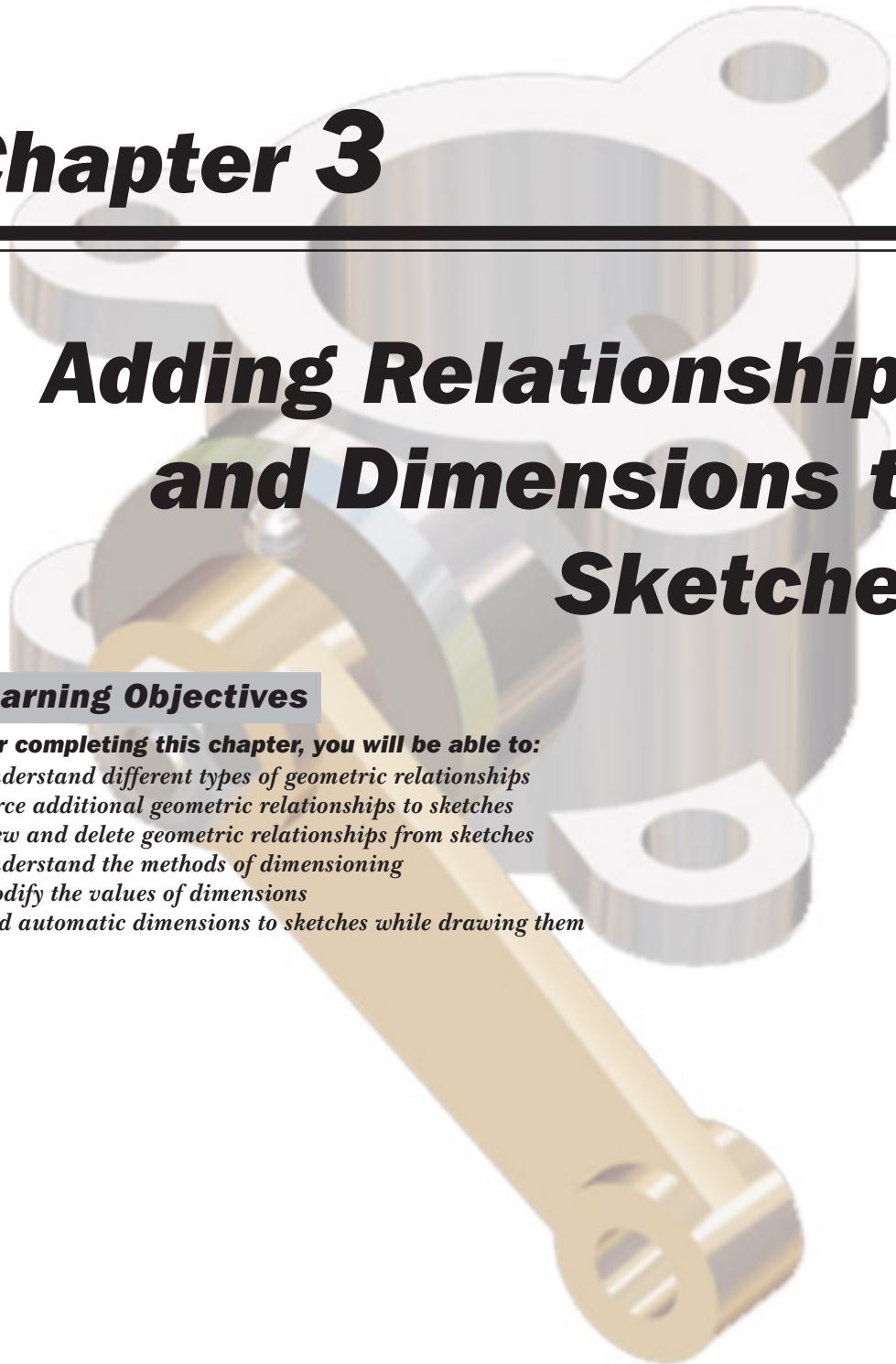

Learning Objectives

After completing this chapter, you will be able to:

- *Understand different types of geometric relationships*
- *Force additional geometric relationships to sketches*
- *View and delete geometric relationships from sketches*
- *Understand the methods of dimensioning*
- *Modify the values of dimensions*
- *Add automatic dimensions to sketches while drawing them*

GEOMETRIC RELATIONSHIPS

Geometric relationships are logical operations performed on the sketched entities to relate them to the other sketched entities using the standard properties such as collinearity, concentricity, tangency, and so on. These relationships constrain the degrees of freedom of the sketched entities and stabilize a sketch so that it does not change its shape and location unpredictably at any stage of the design. Most of the relationships are automatically applied to the sketched entities while drawing.

All geometric relationships have separate relationship handles associated with them. These handles can be seen on the sketched entities when relationships are applied to them. In the sketching environment of Solid Edge, you can add eleven types of relationships. These relationships are discussed next.

Connect Relationship

Ribbon: Home > Relate > Connect

The Connect relationship is used to connect the keypoints such as endpoint, midpoint, or center point of a sketched entity to another sketched entity or to its keypoints. When the keypoint of the first entity is connected to the keypoint of the second entity, it is called a two-point connect. It is represented by a square with a dot inside it on the geometry. However, when the keypoint of the first entity is directly connected to the second entity, it is called a one-point connect and is represented by a cross on the geometry.

To add this relationship between the two keypoints of two different sketched entities, choose the **Connect** tool from the **Relate** group of the **Home** tab. Next, move the cursor over the keypoint of the first sketched entity and then click to select the entity when the handle of the keypoint is displayed. After selecting the keypoint of the first entity, move the cursor over the other sketched entity. Depending on whether you connect the keypoint of the first entity to the keypoint of the second entity or to the second entity itself, the relationship will be a one-point connect or a two-point connect. Figure 3-1 shows the entities selected for one-point connect. Figure 3-2 shows the relationship handle displayed after adding the relationship.

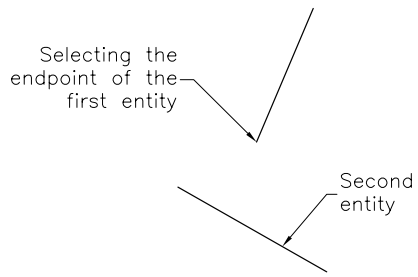

Figure 3-1 *Selecting entities for one-point connect relationship*

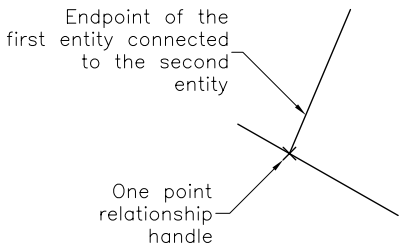

Figure 3-2 *Entities after adding the one-point connect relationship*

Evaluation Copy. Do not reproduce. For information visit www.cadcim.com

Note

If the handles that represent the relationship are not displayed in the drawing area by default, you need to choose the ***Relationship Handles*** *button from the* ***Relate*** *group of the* ***Home*** *tab to display them.*

Figure 3-3 shows the endpoint of the first entity being connected to the endpoint of the second entity. This is a two-point connect. Therefore, the relationship handle shows a dot inside the square, as shown in Figure 3-4.

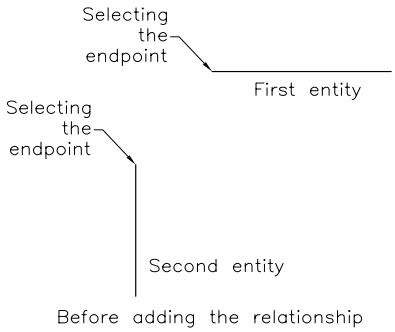

Figure 3-3 *Entities selected for two-point connect relationship*

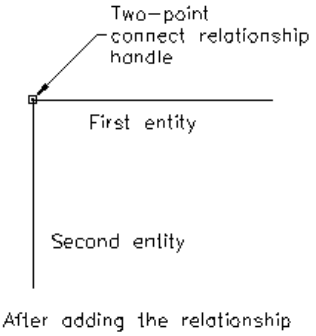

Figure 3-4 *Entities after adding the two-point connect relationship*

Concentric Relationship

Ribbon: Home > Relate > Concentric

The Concentric relationship forces two arcs and two circles or an arc and a circle to share the same center point. If there are two arcs and two circles or an arc and a circle with center points at different locations, this relationship will force the first selected arc or circle to move such that its center point is placed over the center point of the second arc or circle. The handle of this relationship is represented by two concentric circles. Figure 3-5 shows two circles before and after applying this relationship.

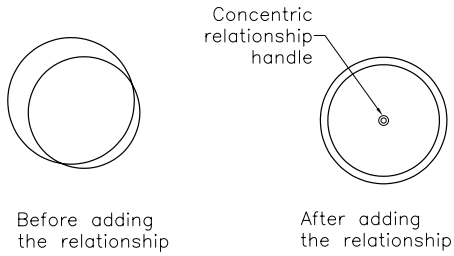

Figure 3-5 *Sketch before and after applying the concentric relationship*

Horizontal/Vertical Relationship

Ribbon: Home > Relate > Horizontal/Vertical

The Horizontal/Vertical relationship forces an inclined line to become horizontal or vertical. If the angle of the inclined line is less than 45 degrees, it will become horizontal. But if the angle is equal to or greater than 45 degrees, it will become vertical. You can also select two points and force them to be placed horizontally or vertically. The handle of this relationship is a plus sign (+).

Evaluation Copy. Do not reproduce. For information visit www.cadcim.com

Collinear Relationship

Ribbon: Home > Relate > Collinear

The Collinear relationship forces the selected line segment(s) to be placed in a straight line. To add the collinear relationship, invoke the **Collinear** tool; you will be prompted to click on the first line. After making the first selection, you will be prompted to click on the next line. The first line segment is automatically forced to be placed in line with the second line segment. The handle of this relationship is represented by circles, which appear on the collinear lines.

Parallel Relationship

Ribbon: Home > Relate > Parallel

The Parallel relationship forces a selected line segment to become parallel to another line segment. On invoking the **Parallel** tool, you will be prompted to click on a line. Click on a line; you will be prompted to click on the next line. After you click on the second line, the first line will become parallel to the second line. The handle of this relationship is represented by two parallel lines.

Perpendicular Relationship

Ribbon: Home > Relate > Perpendicular

The Perpendicular relationship forces a selected line to become perpendicular to another line, arc, circle, or ellipse. When you invoke the **Perpendicular** tool, you will be prompted to click on the first line to make it perpendicular. On clicking the first line, you will be prompted to click on the second line, arc, circle, or ellipse to make it perpendicular. On clicking the second entity, the first line will become perpendicular to the second entity. The handle of this relationship is a perpendicular symbol.

Lock Relationship

Ribbon: Home > Relate > Lock

The Lock relationship is used to fix the orientation or the location of the selected sketched entity or the keypoint of the sketched entity. If you apply this constraint to the keypoint of a sketched entity, the entity will be fixed at that keypoint and you will not be able to modify the entity using that keypoint. However, you can modify the entity from other keypoints.

Note

*A keypoint that has a lock on it cannot be modified during recomputation by changing the value of dimension manually or by dragging, but it can be modified by manipulation commands such as **Move**, **Rotate**, **Mirror**, and so on, and will be fixed at a new location after manipulations.*

Evaluation Copy. Do not reproduce. For information visit www.cadcim.com

Rigid Set Relationship

Ribbon: Home > Relate > Rigid Set

The Rigid Set relationship is used to group the selected sketched entities into a rigid set. When the entities are grouped in a rigid set, they behave as a single entity. Therefore, if you drag one of the entities, all entities in the rigid set are automatically dragged. Note that you cannot include dimensions or a text entity in a rigid set.

Note

*The **Rigid Set** and **Lock** tools will only be enabled when the **Maintain Relationships** button in the **Relate** group of the **Home** tab is chosen.*

Tangent Relationship

Ribbon: Home > Relate > Tangent

The Tangent relationship forces a selected sketched entity to become tangent to another sketched entity, refer to Figure 3-6. Note that one of the two entities selected should be an arc, circle, curve, or an ellipse. The handle of this relationship is a circle that appears at the point of tangency.

To add the tangent relationship, invoke the **Tangent** tool and click on the elements; the tangent relationship is applied between the selected elements, as shown in Figure 3-7.

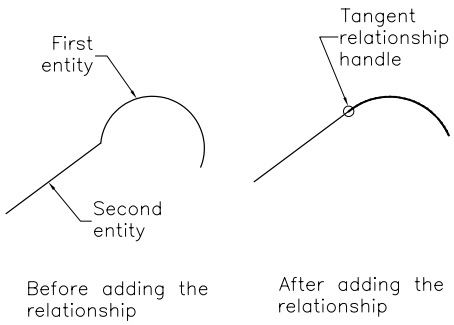

Figure 3-6 *Adding the Tangent relationship*

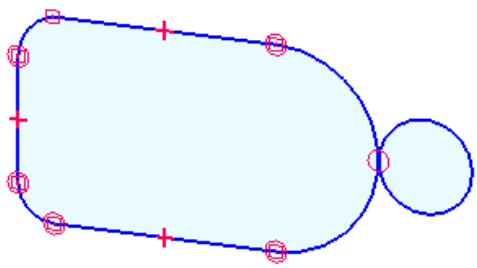

Figure 3-7 *Making a curve tangent to a chain of tangentially connected entities*

Equal Relationship

Ribbon: Home > Relate > Equal

The Equal relationship can be used for line segments, ellipses, arcs, or circles. If you select two line segments, this relationship will force the length of the first selected line segment to become equal to the length of the second selected line segment. In case of arcs or circles, this relationship will force the radius of the first selected entity to become equal to the radius of the second selected entity. Similarly, you can force two ellipses to become equal in size using this relationship. The handle of this relationship is an equal sign (=).

Evaluation Copy. Do not reproduce. For information visit www.cadcim.com

Symmetric Relationship

Ribbon: Home > Relate > Symmetric

The Symmetric relationship is used to force the selected sketched entities to become symmetrical about a symmetry axis, which can be a sketched line or a reference plane. This relationship is used in the sketches of the models that are symmetrical about a line. When you invoke the **Symmetric** tool, you will be prompted to click on the symmetry axis. Click on the symmetry axis; you will be prompted to click on an entity. Note that you can select only one entity at a time to apply this relationship. Once you have selected the first sketched entity, you will be prompted to click on the entity. Remember that the second entity should be the same as the first element. This means that if the first entity is a line, the second entity should also be a line. As soon as you select the second entity, the first selected entity will be modified such that its distance and orientation from the axis of symmetry becomes equal to the distance and orientation of the second selected entity. After you have applied this constraint to one set of entities, you will be prompted to click on the next set of first and second entities. However, this time you will not be prompted to select the axis of symmetry. The last axis of symmetry will be automatically selected to add this relationship.

Figure 3-8 shows the sketched entities and the symmetry axis before applying the symmetric relationship and Figure 3-9 shows the sketch after applying the relationship.

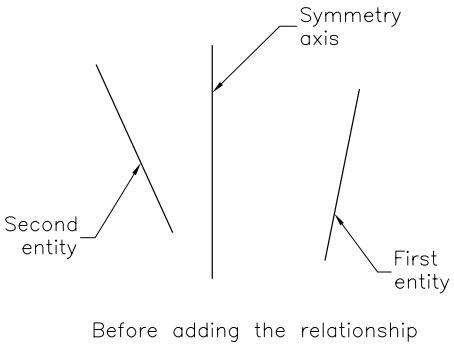

Figure 3-8 *Selecting the entities to apply the symmetric relationship*

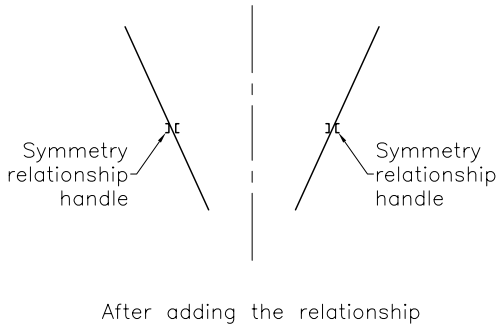

Figure 3-9 *Entities after applying the symmetric relationship*

Setting the Symmetry Axis (Ordered Part Environment)

Ribbon: Home > Relate > Symmetry Axis

In Solid Edge, you can set the symmetry axis before invoking the **Symmetric** tool. After doing that, when you invoke the **Symmetric** tool, you will not be prompted to select the axis of symmetry. The symmetry axis set earlier will be automatically selected as the axis of symmetry. To set the axis of symmetry, choose the **Symmetry Axis** tool from the **Relate** group, you will be prompted to click on the symmetry axis. The line that you select will be automatically changed to the symmetry axis along with its line type.

Evaluation Copy. Do not reproduce. For information visit www.cadcim.com

Note

You may need to apply a number of relationships to constrain all degrees of freedom of a sketch. Generally, while applying relationships to the sketched entities, the first selected entity is modified with respect to the second one. However, if all degrees of freedom of the first entity are restricted, then the second entity is modified.

Controlling the Display of Relationship Handles

Ribbon: Home > Relate > Relationship Handles

The **Relationship Handles** button is used to turn on or off the display of relationship handles in the sketch. If the **Relationship Handles** button is chosen in the **Relate** group, the handles of all relationships will be displayed in the sketch. You can turn off the display of the relationship handles for better visualization by choosing this button again.

CONFLICTS IN RELATIONSHIPS

Sometimes when you try to apply multiple relationships to an entity and the entity is not able to accommodate all those changes, then the **Solid Edge 2022** information box is displayed, as shown in Figure 3-10.

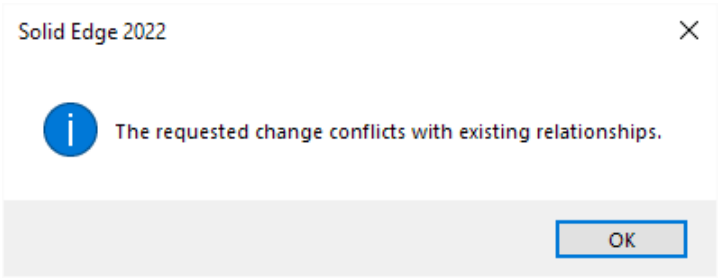

Figure 3-10 *The* ***Solid Edge 2022*** *information box*

This box informs you that applying this relationship will create conflicts in the existing relationships. Therefore, you may need to delete the existing relationships before applying the new ones, depending upon the requirement of the design. For example, if you want to apply the vertical relationship to a horizontal line, you need to delete the horizontal relationship before applying the vertical relationship.

DELETING RELATIONSHIPS

As mentioned earlier, whenever a relationship is applied to a sketched entity, the relationship handle is displayed on the entity. You can delete the applied relationship by selecting that handle and pressing the DELETE key.

DIMENSIONING THE SKETCHED ENTITIES

In Solid Edge, you can use different types of dimensions to dimension the sketched entities. You can create these dimensions using their individual tools or by using the **Smart Dimension** tool. You can also use the options available in the respective Command bars that are displayed for these dimensions. As mentioned earlier, Solid Edge is parametric by nature. Therefore, irrespective of the original size of the entity, you can enter a new value in the **Dimension Value** edit box to

Evaluation Copy. Do not reproduce. For information visit www.cadcim.com

modify the size of the entity to the required value. The methods of dimensioning the entities using these dimensions are discussed next.

Adding Linear Dimensions

Ribbon: Home > Dimension > Smart Dimension / Distance Between

Linear dimensions measure the linear distance of a line segment or the distance between two points. To add this dimension, you can use the **Smart Dimension** tool or the **Distance Between** tool. The points that you can select to add dimension include all the keypoints such as endpoints, midpoints, and so on of lines, curves, arcs, circles, or ellipses. You can add linear dimensions to a vertical or a horizontal line by choosing the **Smart Dimension** tool and then directly selecting the line. Once you have selected the line, the linear dimension will be attached to the cursor. Now, you can place the dimension at any desired location.

To place the dimension between two points, invoke the **Smart Dimension** tool or the **Distance Between** tool and select the points one by one. Now, move the cursor vertically to place the horizontal linear dimension or move the cursor horizontally to place the vertical linear dimension.

To add linear dimensions between arcs and circles by using the **Smart Dimension** tool, you can directly select the arc and the circle. However, to create these dimensions by using the **Distance Between** tool, first you need to move the cursor over the entities to highlight their center points and then select the center points to create the dimensions. Figure 3-11 shows linear dimensioning between the center points of an arc and a circle.

Note

*In order to highlight the center points of the entities, you must select the **Center** check box in the **IntelliSketch** group of the **Sketching** tab in the **Synchronous Part** environment. The **IntelliSketch** group is available in the **Home** tab of the sketching environment in the **Ordered Part** environment.*

You can also add the horizontal or vertical dimension to the inclined lines, refer to Figure 3-12. If you select an inclined line after invoking the **Smart Dimension** tool to add a linear dimension, the aligned dimension will be attached to the cursor by default. You need to press and hold the SHIFT key to add the horizontal or vertical dimension. But if you are using the **Distance Between** tool, you can select the endpoints of the inclined line and move the cursor in the horizontal or vertical direction to place the dimension.

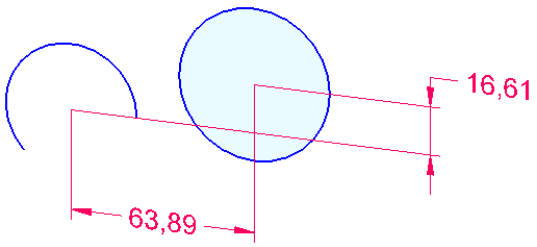

Figure 3-11 *Linear dimensioning of points*

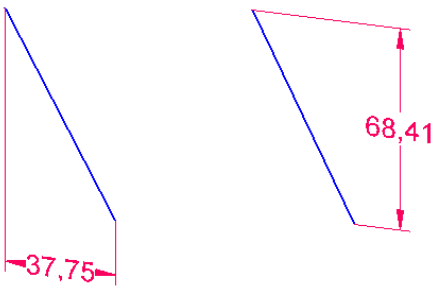

Figure 3-12 *Linear dimensioning of inclined lines*

Evaluation Copy. Do not reproduce. For information visit www.cadcim.com

Command bar Options

While dimensioning the sketched entities, the corresponding Command bars are displayed. Figure 3-13 shows the Command bar displayed on invoking the **Smart Dimension** tool. This Command bar has some additional options and buttons which should be set before creating dimensions. These options are discussed next.

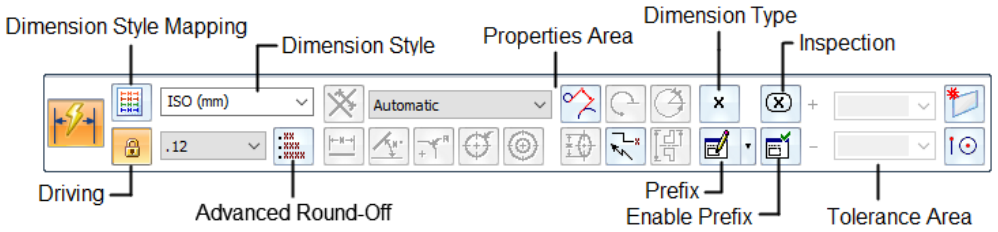

Figure 3-13 *The Command bar options*

Dimension Style

This drop-down list shows the dimension styles, namely **ANSI(ft)**, **ANSI(in)**, **ISO(cm)**, **ISO(m)**, and **ISO(mm)**. By default, **ISO(mm)** is selected in the drop-down list. You can select the required dimension style from it. If this drop-down list is not activated in the Command bar, then you need to choose the **Dimension Style Mapping** button in the Command bar to activate it.

Driving

The **Driving** button is chosen by default. This means the applied dimension is a driving dimension. A driving dimension is the dimension that drives the size of an entity and is displayed in red color. Therefore, if this button is chosen and you modify the value of an applied dimension in the edit box that is displayed on selecting the entity to be dimensioned, then the size of the entity will change accordingly. If you deactivate the **Driving** button while placing the dimension, the dimension will be called as driven dimension and will be displayed in blue color. If you modify its value, the size of the entity will not change and the value of dimension will be displayed underlined. The **Dimension Round-Off** drop-down list adjacent to the **Driving** button is also used to set the round off precision for dimensions. The default round off precision is two decimal places. You can select any other round off precision from this drop-down list.

Advanced Round-Off

The **Advanced Round-Off** button is used to specify the round off options. When you choose this button, the **Round-Off** dialog box will be displayed, as shown in Figure 3-14. The options in this dialog box are discussed next.

Primary linear

The **Primary linear** drop-down list is used to define the round-off value for the primary linear dimension.

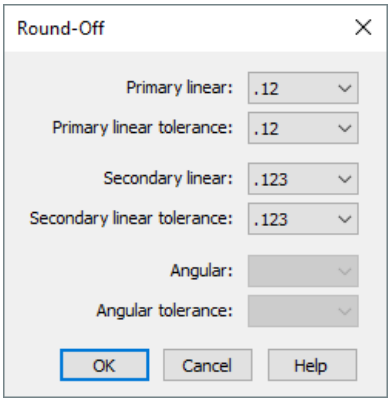

Figure 3-14 *The **Round-Off** dialog box*

Evaluation Copy. Do not reproduce. For information visit www.cadcim.com

Primary linear tolerance
This drop-down list is used to define the round-off value for the primary linear tolerance.

Secondary linear
This drop-down list is used to define the round-off value for the secondary linear dimension.

Secondary linear tolerance
This drop-down list is used to define the round-off value for the secondary linear tolerance.

Angular
This drop-down list is used to define the round-off value for the angular dimension.

Angular tolerance
This drop-down list is used to define the round-off value for the angular tolerance.

Properties

The options in the Properties area are used to specify the orientation of the dimension and also the other properties. Specify the orientation by selecting an appropriate option from the **Orientation** drop-down list. Chose the **Horizontal/Vertical** option if you need to dimension the horizontal or vertical distance. Choose the **By 2 Points** option, if you need to measure the aligned dimension. Choose the **Use Dimension Axis** option, if you need to measure the entity from a baseline.

The other buttons in this area have to be chosen based on the specific segment. The **Tangent** button is discussed next. The remaining buttons will be discussed later.

Tangent
This button allows you to add a dimension between the tangent points of two entities. If you choose this button before selecting entities, the dimension will be tangent to both the entities. But if you first select an arc or a circle, then choose this button and finally select the second arc or circle, the dimension will be tangent to only the second entity.

Tolerance

The options in this area are used to specify the dimension type and the related tolerances. These options are discussed next.

Dimension Type
This button is chosen to specify the type of dimension to be applied. When you choose this button from the Tolerance area of the Command bar, a flyout with options such as **Nominal**, **Unit Tolerance**, **Alpha Tolerance**, **Class**, **Limit**, **Basic**, and so on is displayed. These options are used to specify the type of dimensions. For example, to add a tolerance dimension to a sketch, you can choose the **Unit Tolerance** or **Alpha Tolerance** option from this flyout.

You can specify the parameters related to the type of dimensions to be applied in the edit boxes displayed in the Tolerance area. Similarly, you can specify the limit dimensions of

Evaluation Copy. Do not reproduce. For information visit www.cadcim.com

the selected entity by choosing the **Limit** option. On doing so, the **Upper Tolerance** and **Lower Tolerance** edit boxes will be displayed. You can enter the upper and lower tolerance values in these edit boxes. Figure 3-15 shows a sketch dimensioned by using the limit and tolerance dimensions.

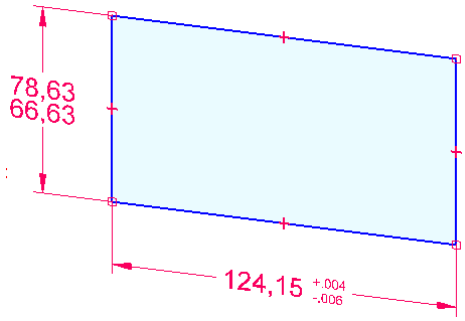

Figure 3-15 *Sketch dimensioned by using the limit and unit tolerance dimension types*

Inspection

This button is chosen from the Tolerance area of the Command bar to add an oblong around the dimension for inspection.

Prefix

This button is chosen to add a prefix, suffix, superfix, or subfix to a dimension. If you choose this button from the Tolerance area of the Command bar, the **Dimension Prefix** dialog box will be displayed, as shown in Figure 3-16. You can use this dialog box to add a special symbol or add your own text to the dimension. You can toggle between enabling and disabling the data defined in this dialog box by using the **Enable Prefix** button which is also available in the Tolerance area of the Command bar.

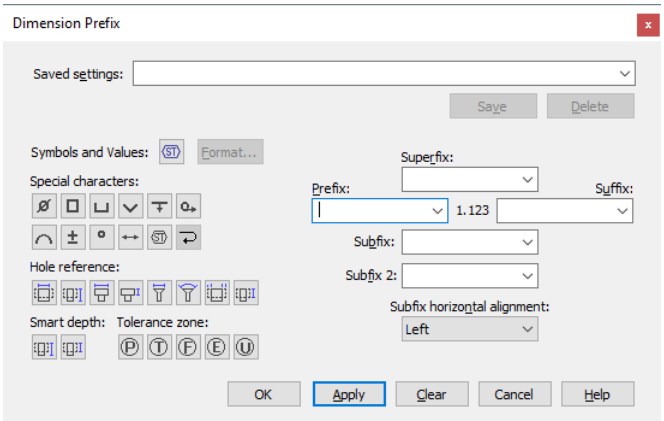

Figure 3-16 *The* ***Dimension Prefix*** *dialog box*

Evaluation Copy. Do not reproduce. For information visit www.cadcim.com

Adding Aligned Dimensions

Ribbon: Home > Dimension > Smart Dimension

Aligned dimensions are used to dimension the lines that are not parallel to the X-axis or the Y-axis. This type of dimensioning measures the actual distance of the aligned lines. You can invoke the **Smart Dimension** tool and directly select the inclined line to apply this dimension. When you select the line, an aligned dimension will be attached to the cursor. Move the cursor and place the dimension at the required location.

You can also select two points to apply the aligned dimensions. The points that can be used include the endpoints of lines, curves, or arcs and the center points of arcs, circles, or ellipses. If you select these two points, the linear dimensions will be displayed by default. To add the aligned dimensions, press and hold the SHIFT key; the aligned dimension will be displayed. Move the cursor and place the dimension at the desired location. Figures 3-17 and 3-18 show the aligned dimensions applied to various objects.

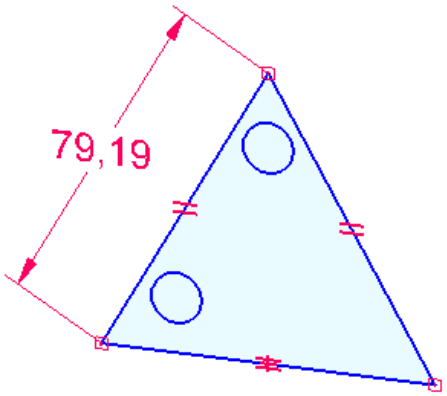

Figure 3-17 *Aligned dimensioning of lines*

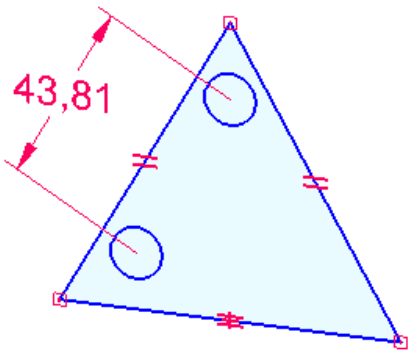

Figure 3-18 *Aligned dimensioning of points*

Note

If you are using the ***Distance Between*** *tool, choose the* ***By 2 Points*** *option from the* ***Orientation*** *drop-down list in the Command bar to add the aligned dimension.*

Adding Angular Dimensions

Ribbon: Home > Dimension > Smart Dimension / Angle Between

Angular dimensions are used to dimension angles. You can directly select two line segments or use three points to apply the angular dimensions. You can also use angular dimensioning to dimension an arc. The options for adding angular dimensions are discussed next.

Angular Dimensioning by Using Two Line Segments

You can directly select two line segments to apply angular dimensions between them. Invoke the **Smart Dimension** tool and then select a line segment; a linear or an aligned dimension will be attached to the cursor, choose the **Angle** button from the Command bar and then select the second line. Next, place the dimension to measure the angle between the two lines. While placing

Evaluation Copy. Do not reproduce. For information visit www.cadcim.com

the dimension, you need to be careful about its point of placement of the dimension because depending on this point of the placement, the interior or the exterior angle will be displayed. Figure 3-19 shows the angular dimensioning between two lines and Figure 3-20 shows the exterior angle between the same two lines.

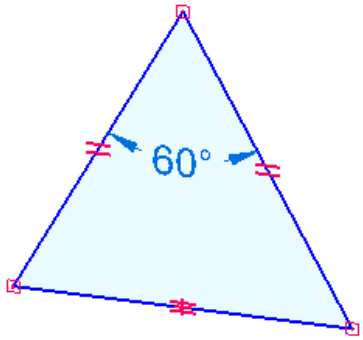

Figure 3-19 *Angular dimensioning between two lines*

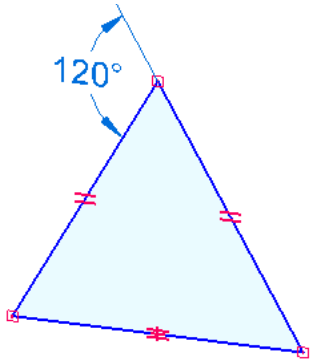

Figure 3-20 *Exterior angle between two lines*

Before placing the angular dimension, if you choose the **Major-Minor** button from the Command bar, you can specify the angle between the lines or its complimentary angle. Figure 3-21 shows major angle dimension between two lines.



Tip

After placing the dimension, you can drag it to a new location. To do so, exit the dimensioning tool and then select the dimension lines or the dimension text. The dimension lines are the ones between which the dimension text is placed. After selecting the dimension lines or the dimension text, press and hold the left mouse button and drag the cursor to a new location. The dimension will be placed at the new location. Also, note that you cannot change the dimension type by dragging. For example, you cannot drag a major angle dimension to a new location to make it a minor angle dimension.

Angular Dimensioning by Using Three Points

You can also add angular dimensions by using three keypoints using the **Angle Between** tool. The keypoints should be selected in the clockwise or counterclockwise direction.

Note that while selecting the points, the vertex of the angle should be selected last. Also, make sure that the **By 2 Points** option is chosen in the **Orientation** drop-down list of the Command bar. Figure 3-22 shows the angular dimensioning by using three points.

Angular Dimensioning of the Sweep Angle of an Arc

You can use angular dimensions to dimension the sweep angle of an arc. To do so, invoke the **Smart Dimension** tool and select an arc. Next, choose the **Angle** button from the Command bar; the angular dimension of the sweep angle of arc will be displayed, as shown in Figure 3-23.

Evaluation Copy. Do not reproduce. For information visit www.cadcim.com

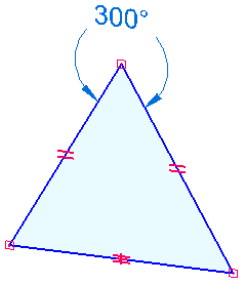

Figure 3-21 *Major angle between two lines*

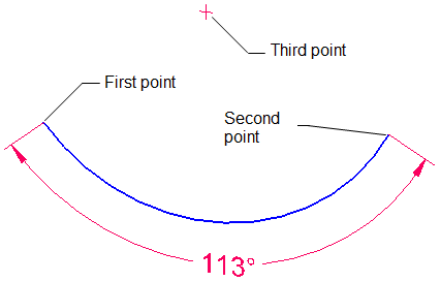

Figure 3-22 *Angular dimensioning by using three points*

Adding Diameter Dimensions

Ribbon: Home > Dimension > Smart Dimension

Diameter dimensions are applied to dimension a circle or an arc in terms of its diameter. In Solid Edge, when you select a circle to dimension, the diameter dimension is applied to it by default. However, if you select an arc to dimension, the radius dimension will be applied to it. You can also apply the diameter dimension to an arc. To do so, invoke the **Smart Dimension** tool and then select the arc. Now, choose the **Diameter** button from the Command bar to apply the diameter dimension. Figure 3-24 shows an arc and a circle with the diameter dimensions.

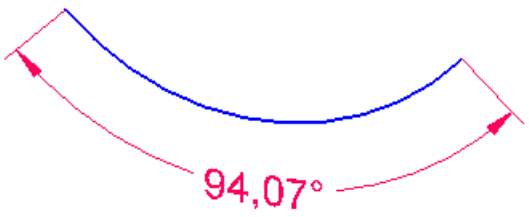

Figure 3-23 *Dimensioning the sweep angle of an arc*

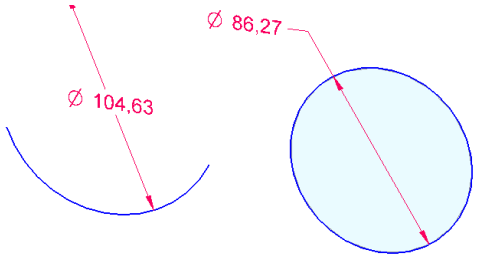

Figure 3-24 *Diameter dimensioning of an arc and a circle*

Adding Radial Dimensions

Ribbon: Home > Dimension > Smart Dimension

Radial dimensions are applied to dimension an arc, a circle, a curve, or an ellipse in terms of its radius. As mentioned earlier, by default, the circles will be assigned the diameter dimensions and the arcs will be applied the radius dimensions. However, you can also apply the radius dimensions to a circle. To do so, invoke the **Smart Dimension** tool and then select the circle. Now, choose the **Radius** button from the Command bar to apply the radius dimension. Figure 3-25 shows an arc and a circle with the radius dimensions.

Evaluation Copy. Do not reproduce. For information visit www.cadcim.com

Adding Symmetric Diameter Dimensions

Ribbon: Home > Dimension > Symmetric Diameter

Symmetric diameter dimensioning is used to dimension the sketches of the revolved components. The sketch for a revolved component is drawn using the simple sketching entities. For example, if you draw a rectangle and revolve it, it will result in a cylinder. Now, if you dimension the rectangle using the linear dimension, the same dimensions will be displayed when you generate the drawing views of the cylinder. Also, the same dimensions will be used while manufacturing the component. But these linear dimensions will result in a confusion while manufacturing the component. This is because while manufacturing a revolved component, the dimensions have to be in terms of the diameter of the revolved component. The linear dimensions will not be acceptable during the manufacturing of a revolved component.

To overcome this confusion, the sketches of the revolved features are dimensioned using the symmetric diameter dimensions. These dimensions display the distance between the two selected line segments in terms of diameter, which is double of the original length. Also, the **Ø** symbol is placed as a prefix to the dimension. For example, if the original dimension between two entities is 10, the symmetric diameter dimension will display it as Ø20. This is because when you revolve a rectangle with a 10 mm width, the diameter of the resultant cylinder will be 20 mm.

To add these dimensions, choose the **Symmetric Diameter** tool from the **Dimension** group of the **Home** tab; you will be prompted to click on the dimension origin element. Note that the dimension origin element should be the line or the axis in the sketch about which the sketch will be revolved. After selecting the axis or the line, you will be prompted to select the dimension measurement element. Select the line or the keypoint in the sketch to which you want to add the linear diameter dimensions. Now, choose the **Half/Full** button from the Command bar. You will notice that a dimension, which is twice the measured distance, is attached to the cursor. Place the dimension at the desired location. Figure 3-26 shows the dimension value preceded by the **Ø** symbol which indicates the symmetric diameter dimension.

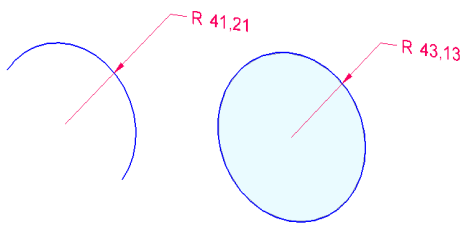

Figure 3-25 *Radial dimensioning of an arc and a circle*

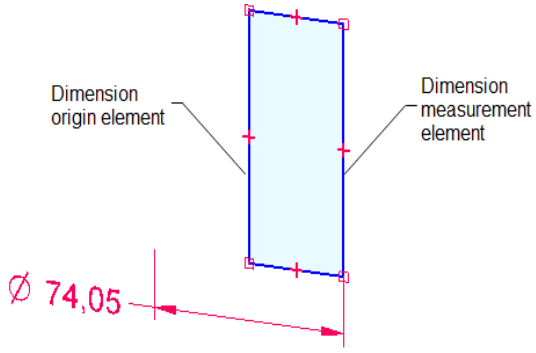

Figure 3-26 *Symmetric diameter dimensioning of a sketch*

Evaluation Copy. Do not reproduce. For information visit www.cadcim.com

Adding Coordinate Dimensions

Ribbon: Home > Dimension > Coordinate Dimension drop-down > Coordinate Dimension

Coordinate dimensions are used to dimension a sketch with respect to a common origin point which can be one of the vertices in the sketch. Figure 3-27 shows the coordinate dimensions of a sketch. In this case, the lower left corner of the sketch is taken as the common origin. The remaining entities are dimensioned with respect to this point.

To add this dimension, choose the **Coordinate Dimension** tool from the **Coordinate Dimension** drop-down in the **Dimension** group of the **Home** tab; you will be prompted to click on the common origin element. Select a vertex, keypoint, or a line segment that you want to use as the common origin. Note that if you select a vertex or a keypoint, you can take it as a common origin for the horizontal or the vertical coordinate dimension. But in case of line segments, the vertical line will be taken as the origin for the horizontal dimensions and the horizontal line will be taken as the origin for the vertical dimensions.

After selecting the common origin, move the cursor horizontally or vertically to place the common origin dimension, which is 0, refer to Figure 3-27. If you have placed zero for the X direction, which is represented by a vertical dimension line, move the cursor in the horizontal direction and select a point or a line segment. Next, move the cursor in the direction of the zero dimension and place it. Follow this procedure to place the remaining dimensions along that direction.

Next, right-click to place the coordinate dimensions along the second direction; you will be prompted again to click on the common origin element. Select the origin element and place the dimension along the second direction and then select the points to place the coordinate dimensions along that direction.

Change Coordinate Origin

Ribbon: Home > Dimension > Coordinate Dimension drop-down > Change Coordinate Origin

After dimensioning the sketch by using the **Coordinate Dimension** tool, you can also change the common origin element. To change the common origin element, choose the **Change Coordinate Origin** tool from the **Coordinate Dimension** drop-down in the **Dimension** group of the **Home** tab; you will be prompted to click on the dimension. Now, choose the dimension where you want to place the new common origin element by moving the cursor horizontally or vertically.

Adding Angular Coordinate Dimensions

Ribbon: Home > Dimension > Angular Coordinate Dimension

As the name suggests, this tool is used to add angular coordinate dimensions with respect to a common origin point, as shown in Figure 3-28. On invoking this tool, you will be prompted to click on the group center element. This point will be taken as the center point and the angular coordinate dimensions will be created around this point. After selecting this point, you will be prompted to select the common origin element. This is the element that will be taken

Evaluation Copy. Do not reproduce. For information visit www.cadcim.com

as the origin for the angular coordinate dimensions. Select the origin point and move the cursor to place the zero dimension; you will be prompted to click on the dimension measurement element. Select the point to which you want to add the angular coordinate dimension. After selecting the element, the preview of the angular coordinate dimension will be displayed. If the dimension is placed clockwise, you can display the counterclockwise dimension by choosing the **Counterclockwise** button from the Command bar. Move the cursor and place the dimension. Continue this process to add all angular coordinate dimensions.

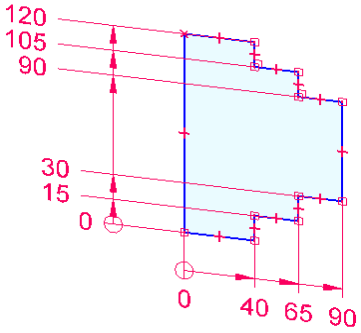

Figure 3-27 *Coordinate dimensioning of a sketch*

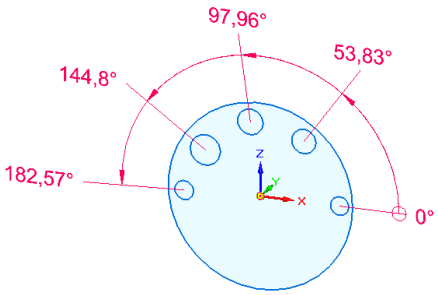

Figure 3-28 *Angular coordinate dimensioning of a sketch*

ADDING AUTOMATIC DIMENSIONS (ORDERED)

Ribbon: Home > Dimension > Auto-Dimension

The **Auto-Dimension** tool is used to add dimensions to the sketched entities automatically when you draw them. You can set options for the automatic display of dimensions while drawing an entity by choosing the **IntelliSketch Options** button from the **IntelliSketch** group of the **Home** tab. When you choose this button, the **IntelliSketch** dialog box will be displayed with the **Relationships** tab chosen by default. Choose the **Auto-Dimension** tab, refer to Figure 3-29. The options in this tab are discussed next.

Automatic Dimensioning Options Area

The options in this area are used to specify the automatic dimensions. These options are discussed next.

Automatically create dimensions for new geometry

If this check box is selected then the dimensions will be created automatically in the newly created geometry. The other options in this dialog box will be activated only if this check box is selected. These options are discussed next.

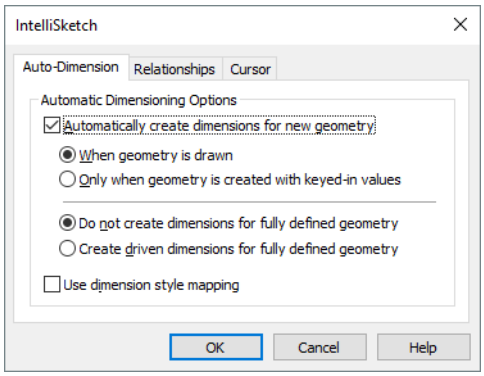

Figure 3-29 *The **IntelliSketch** dialog box*

Evaluation Copy. Do not reproduce. For information visit www.cadcim.com

When geometry is drawn

This radio button is selected by default. As a result, the automatic dimensions are applied as you draw the sketched entities.

Only when geometry is created with keyed-in values

If this radio button is selected, the automatic dimensions will be applied only to the entities that are created by entering the values in the Command bar.

Do not create dimensions for fully defined geometry

This radio button is selected by default. As a result, the automatic dimensions are not added if the sketch is already fully defined.

Create driven dimensions for fully defined geometry

If this radio button is selected, the automatic driven dimensions will be added for the fully defined sketches.

Use dimension style mapping

If this check box is selected, the placed dimensions automatically inherit the dimension style specified in the **Dimension Style** tab of the **Solid Edge Options** dialog box.

UNDERSTANDING THE CONCEPT OF FULLY CONSTRAINED SKETCHES

A fully constrained sketch is the one in which all the entities are completely constrained to their surroundings using constraints and dimensions. It has a definite shape, size, orientation, and location. Whenever you draw a sketched entity, it becomes blue in color. If you add dimensions and constraints to fully constrain it, the entity will turn black. If it does not turn black, choose the **Relationship Colors** button from the **Evaluate** group of the **Inspect** tab. Note that while creating the base sketch in Solid Edge, you need to relate or dimension it with respect to the reference planes in order to fully constrain it.

MEASURING SKETCHED ENTITIES

In Solid Edge, you can measure the distance between the sketched entities, the total length of a closed loop or an open entity, and the area of a loop. To do so, choose the **Smart Measure** tool from the **2D Measure** group of the **Inspect** tab. This tool works similar to the **Smart Dimension** tool. You can also calculate the area properties of the sketched entities. The techniques to measure the area properties are discussed next.

Measuring Distances

Ribbon: Inspect > 2D Measure > Measure Distance

The **Measure Distance** tool is used to measure the linear distance between any two selected points. To measure the linear distance, choose the **Measure Distance** tool from the **2D Measure** group of the **Inspect** tab; you will be prompted to click on the first point. Select the first point to measure the linear distance; you will be prompted to click on the next point. If you move the cursor over a keypoint to select it as the second point, the linear distance, the ΔX

Evaluation Copy. Do not reproduce. For information visit www.cadcim.com

distance, and the ΔY distance between the two points will be displayed on the right of the cursor without even selecting the point, as shown in Figure 3-30. If the second point is not a keypoint, the values will not be displayed on the side of the cursor. You need to click on the left mouse button to display the distance value. In this case, the delta values will not be displayed. You can continue to select multiple points to measure the distance between any two points.

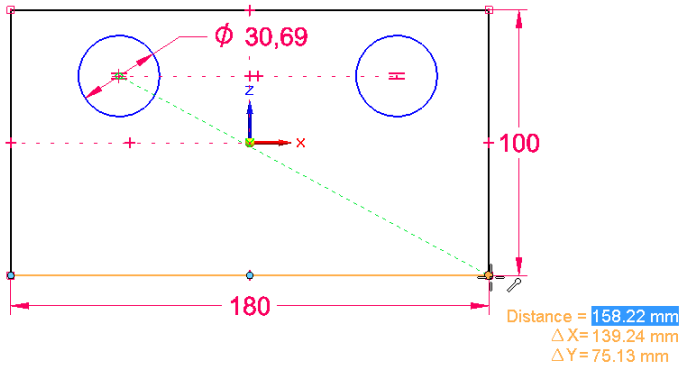

Figure 3-30 *Measuring the distance between the two keypoints*

Measuring the Total Length of a Closed Loop or an Open Sketch

Ribbon: Inspect > 2D Measure > Measure Total Length

The **Measure Total Length** tool is used to measure the total length of a closed loop or an open sketch. When you invoke this tool, the Command bar will be displayed and you will be prompted to click on the element(s) to be measured. By default, the **Chain** option is chosen in the drop-down list in the Command bar. As a result, the complete chain of entities will be selected and the total length of the chain will be displayed. You can also choose the **Single** option from this drop-down list to measure the total length of a single entity.

The total length is displayed in the **Length** edit box of the Command bar. If you want to measure the total length of a new set of entities, then choose the **Deselect** button from the Command bar. This will clear the currently selected set and allows you to select a new set of entities.

Measuring an Area

Ribbon: Inspect > 2D Measure > Measure Area

The **Measure Area** tool is used to measure the area inside a closed loop. To do so, invoke the **Measure Area** tool; you will be prompted to click in the area to be measured. Click inside the closed loop; the area will be highlighted in the drawing window and will be displayed on the right of the cursor. You will notice that all the closed loops inside the selected area get removed automatically and are not highlighted, as shown in Figure 3-31.

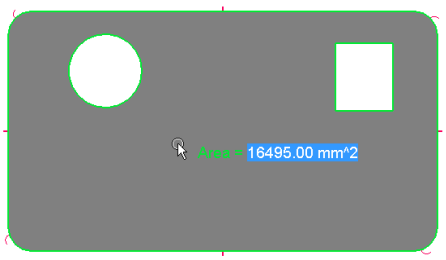

Figure 3-31 *Measuring the area of a closed loop*

Evaluation Copy. Do not reproduce. For information visit www.cadcim.com

If you also want to include the inner closed loops for measuring, then press and hold the CTRL key and click inside the inner closed loop. The area inside the inner closed loop will also get highlighted and two values will be displayed on the right of the cursor. The first value will be the area of the second loop and the other value will be the second or combined area of the two loops. You can continue to add or remove the closed loops by pressing and holding the CTRL key and then clicking inside them.

Calculating the Area Properties

Ribbon: Inspect > Evaluate > Area

The **Area** tool is used to calculate the properties of a selected area. On invoking this tool, you will be prompted to click on an area. Click inside a closed loop; the area of that loop will be highlighted. Choose the **Accept** button from the Command bar and right-click in the area; a shortcut menu will be displayed. Choose the **Properties** option from it to display the **Info** dialog box. This dialog box lists all the properties of the selected area, as shown in Figure 3-32. Choose the **OK** button to exit this dialog box.

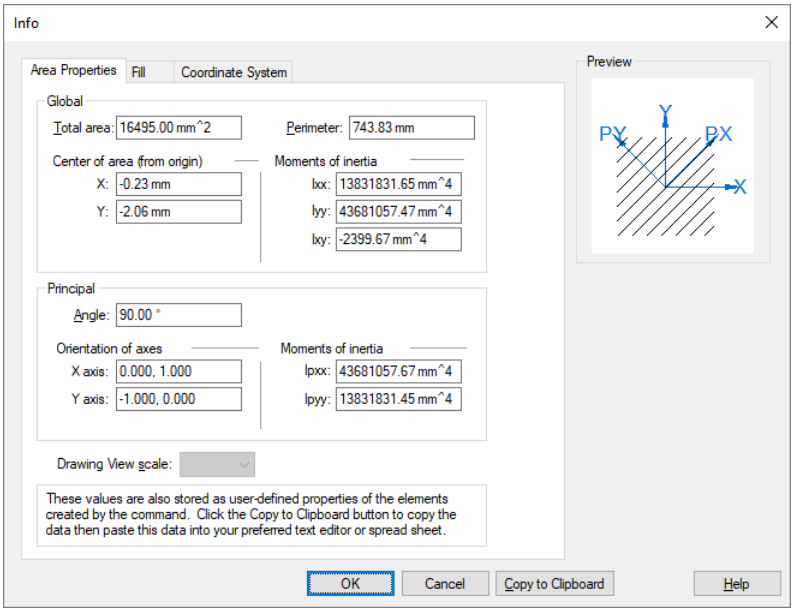

Figure 3-32 *The* ***Info*** *dialog box*

TUTORIALS

You will use relationships and parametric dimensions to complete the models in the following tutorials.

Tutorial 1 — Synchronous

In this tutorial, you will draw the profile of the model shown in Figure 3-33. The profile shown in Figure 3-34 should be symmetric about the origin. You need not use the edit boxes available in the Command bar to enter the values of the entities. Instead, you can use the parametric dimensions to complete the sketch. **(Expected time: 30 min)**

Evaluation Copy. Do not reproduce. For information visit www.cadcim.com

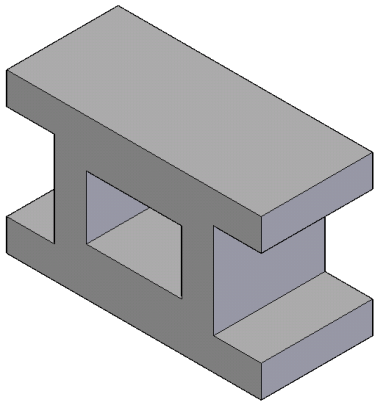

Figure 3-33 Model for Tutorial 1

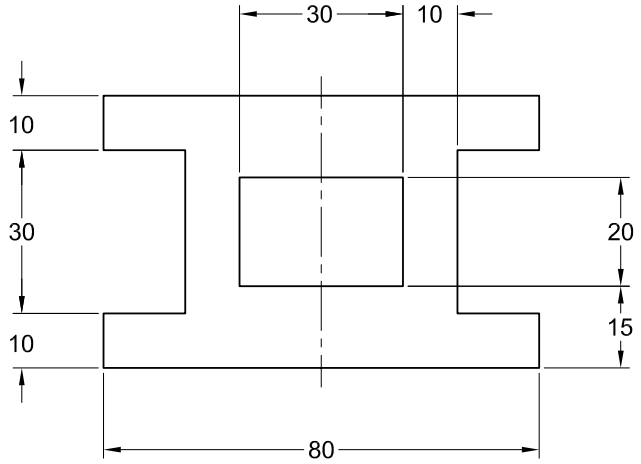

Figure 3-34 Profile to be drawn for Tutorial 1

The following steps are required to complete this tutorial:

a. Start Solid Edge and then start a new part file.
b. Draw the outer loop of the profile by using the **Line** tool.
c. Add relationships and dimensions to the outer loop.
d. Draw a rectangle inside the outer loop by using the **Rectangle** tool and add dimensions and relations to it.
e. Save the sketch and close the file.

Starting a Solid Edge Document

The profile of the model will be created using the tools in the **Home** tab of the Solid Edge's **Synchronous Part** environment. Therefore, you need to start a new part file first.

1. Double-click on the Solid Edge 2022 shortcut icon on the desktop of your computer.

   Next, you need to start a new part file to draw the sketch of the given model.

2. Choose the **New** tool from the **Quick Access** toolbar of the home screen; the **New** dialog box is displayed. Next, select the **iso metric part.par** and choose the **OK** button to start a new Solid Edge part file.

Drawing the Outer Loop and Adding Relationships

If the sketch consists of more than one closed loop, it is recommended to draw the outer loop first and then add required relationships and dimensions to it. This makes it easier to draw and dimension the inner loop.

1. Choose the **Line** tool from the **Draw** group of the **Home** tab; the **Line** Command bar is displayed and the alignment lines are attached to the cursor.

Evaluation Copy. Do not reproduce. For information visit www.cadcim.com

2. Next, you need to define the plane on which you want to draw the profile of the base feature. Select the **Base Reference Planes** check box in the PathFinder and move the cursor toward the XZ plane, and then select it for sketching.

3. The view orientation of the part document is set to Dimetric by default. Choose the **Sketch View** tool from the status bar to view the horizontal and vertical settings properly.

4. Draw the sketch of the outer loop, as shown in Figure 3-35. It is evident from this figure that the sketch is drawn around the origin and it is not symmetric at this stage. It will become symmetric after adding all relationships and dimensions to it. You can use the alignment indicators to draw the sketch. For your reference, the lines in the sketch are indicated by numbers.

   Next, you need to add relationships to the sketch. First, you need to apply the Equal relationship and then the Symmetric relationship to the sketch.

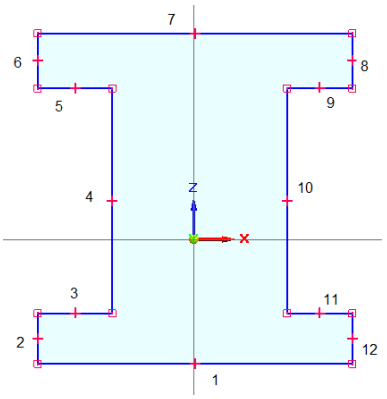

Figure 3-35 *Outer loop of the profile*

5. Choose the **Equal** tool from the **Relate** group; you are prompted to click on an element.



Note

1. If the relationship handles are not visible by default, choose the ***Relationship Handles*** *button from the* ***Relate*** *group of the* ***Home*** *tab; the relationship handles will be displayed. As the* ***Relationship Handles*** *button is a toggle button, you can hide the relationship handle by choosing the button again.*

2. Make sure that in the ***Relationships*** *tab of the* ***IntelliSketch*** *dialog box, the* ***Extensions (point-on and tangent)*** *check box is selected. Also, ensure that the* ***Maintain Relationships*** *button is chosen in the* ***Relate*** *group of the* ***Home*** *tab.*

6. Select line 2; the color of this line is changed and you are prompted to select the next line. Select line 6; the Equal relationship is applied to lines 2 and 6, and you are again prompted to click on an element. Select line 6 as the first line and then line 8 as the second line.

   If the **Solid Edge 2022** information box is displayed while applying any of these constraints, choose the **OK** button to exit the information box.

7. Similarly, select lines 8 and 12, 1 and 7, 3 and 5, 5 and 9, 9 and 11, and then lines 4 and 10. The Equal relationship is applied to all these pairs of lines.

   Next, you need to make this sketch symmetric about the two reference planes that appear as the vertical and horizontal lines in this view.

8. Choose the **Symmetric** tool from the **Relate** group; you are prompted to click on the symmetry axis.



Evaluation Copy. Do not reproduce. For information visit www.cadcim.com

9. Select the Z axis as the symmetry axis; a symmetry axis is created over the reference plane and you are prompted to click on an element.

10. Select lines 2 and 12.

    Similarly, select lines 3 and 11, 4 and 10, 5 and 9, and 6 and 8. Next, you need to make lines 1 and 7 symmetric about the horizontal reference axis. Note that you need to set the symmetry axis again because the vertical reference axis has already been set as the symmetry axis.

11. Choose the **Symmetric** tool from the **Relate** group; you are prompted to click on an element. Specify the X axis as the symmetry axis; you are prompted to click on an element.

12. Select lines 1 and 7 to add the Symmetric relationship between them.

13. Press the ESC key to exit the current tool. The sketch after adding all relationships is shown in Figure 3-36. Notice that all the relationships handles are displayed on the sketch.

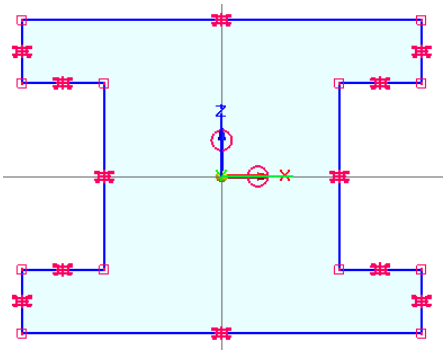

Figure 3-36 *Profile after adding relationships*

Dimensioning the Sketch

Once all the required relationships have been added to the profile, you can dimension it. As mentioned earlier, when you add dimensions to a sketch and modify the value of the dimension, the entity is also modified accordingly.

Before dimensioning the sketch, it is recommended that you turn on the **Relationship Colors** button to display the sketch in black color once it is fully constrained.

1. Choose the **Relationship Colors** button from the **Evaluate** group of the **Inspect** tab if not chosen earlier; the relationship option turns on.

2. Choose the **Smart Dimension** tool from the **Dimension** group of the **Sketching** tab; you are prompted to click on the elements to dimension. Next, select line 1.

   As soon as you select line 1, a linear dimension to measure the length of line 1 is attached to the cursor.

Evaluation Copy. Do not reproduce. For information visit www.cadcim.com

3. Place the dimension below line 1; the **Dimension Value** edit box is displayed below the dimension. Enter **80** in this edit box and press ENTER.

   The length of the line is forced to 80 units and as the sketch is symmetric the line is modified symmetrically.

4. As the **Smart Dimension** tool is still active, you are again prompted to click on the elements to dimension. Select line 2 and place the dimension on the left of this line. Enter **10** in the **Dimension Value** edit box and press ENTER.

   You will notice that the length of lines 6, 8, and 12 is also forced to 10 units each because the Equal relationship has been applied to all these lines.

5. Select line 3 and place the dimension below this line. Next, enter **15** in the **Dimension Value** edit box and press ENTER.

6. Select line 4 and place it along the previous dimension and relationships; the color of the sketch turns black indicating that it is fully constrained. Modify the dimension value to **30** in the **Dimension Value** edit box and press ENTER. Notice that the length of line 10 is also modified.

   This completes the dimensioning of the outer profile. The profile after adding these dimensions is shown in Figure 3-37.

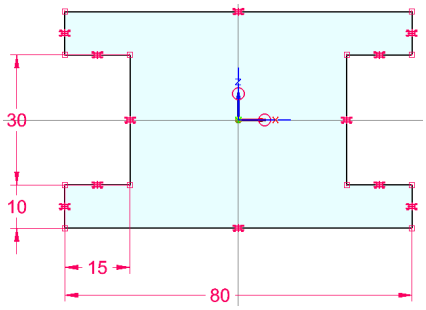

Figure 3-37 *Profile after adding the relationships and dimensions*

Drawing the Inner Loop and Adding Relationships

Next, you need to draw the inner loop, which is a rectangle, and add relationships to the base feature.

1. Choose the **Rectangle by Center** tool from **Home > Draw > Rectangle** drop-down; you are prompted to click for the first point.

2. Click on the origin to specify it as the center point of the rectangle; a dynamic preview of the rectangle is displayed and you are prompted to click to create a rectangle.

3. Click on the graphics window to create a rectangle. Refer to Figure 3-34 for the location of the rectangle.

4. Choose the **Symmetric** tool from the **Relate** group of the **Home** tab and set X axis as the symmetry axis.

5. Select the upper and lower horizontal lines of the rectangle to add symmetric relationship between them.

   Next, you need to change the symmetry axis to make the vertical lines symmetrical.

Evaluation Copy. Do not reproduce. For information visit www.cadcim.com

6. Choose the **Symmetric** tool from the **Relate** group; you are prompted to click on an element. Select the Z axis as the symmetry axis.

7. Select the two vertical lines of rectangle to make them symmetrical about the Z axis.

This completes the process of adding relationships to the inner loop. The sketch at this stage will look similar to the model shown in Figure 3-38.

Dimensioning the Inner Loop

1. Choose the **Smart Dimension** tool from the **Dimension** group of the **Home** tab and select the upper horizontal line of the inner loop.

2. Place the dimension above the sketch. Enter **30** in the **Dimension Value** edit box and press ENTER.

3. Select the right vertical line of the inner loop and place the dimension on the right of the sketch. Enter **20** in the **Dimension Value** edit box and then press ENTER; the inner loop turns black indicating that it is fully constrained. This completes the dimensioning of the profile. The final profile after adding all dimensions, is shown in Figure 3-39.

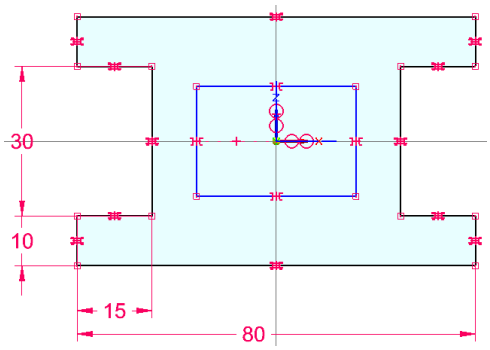

Figure 3-38 *Profile after adding relationships to the inner loop*

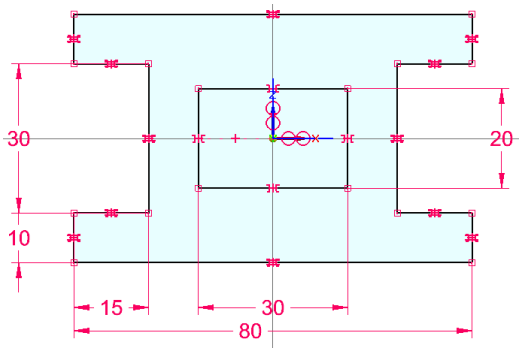

Figure 3-39 *Final profile after adding all dimensions*

4. Press the ESC key to exit the current tool.

Saving the File

1. Choose the **Save** button from the **Quick Access** toolbar; the **Save As** dialog box is displayed.

As mentioned in the previous chapter, you need to create a separate folder for every chapter in the textbook.

2. Browse to the *C:|Solid Edge* folder and then create a folder with the name *c03*.

3. Double-click on the *c03* folder to open it and save the file with the name *c03tut1*.

4. Choose the **Close** button from the file tab bar to close the file.

Evaluation Copy. Do not reproduce. For information visit www.cadcim.com

Tutorial 2 Ordered

In this tutorial, you will create the profile for the model shown in Figure 3-40. The profile to be drawn is shown in Figure 3-41. You will use relationships and parametric dimensions to complete the sketch. **(Expected time: 30 min)**

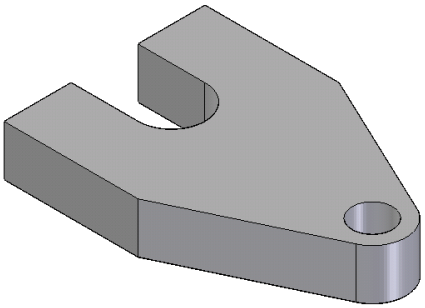

Figure 3-40 Model for Tutorial 2

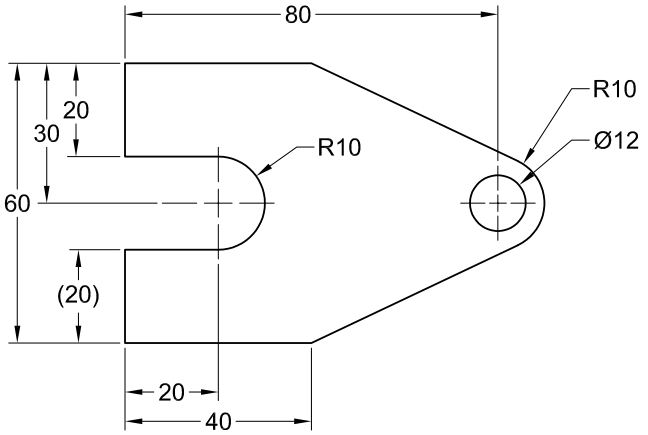

Figure 3-41 Profile to be drawn for Tutorial 2

The following steps are required to complete this tutorial:

a. Start a new part file.
b. Switch to the **Ordered Part** environment.
c. Invoke the sketching environment.
d. Draw the required profile by using the **Line** and **Circle by Center Point** tools.
e. Add the required relationships and dimensions to the sketch.
f. Save the file and close it.

Starting a New Part File and Selecting the Sketching Plane

1. Choose the **New** tool from the **Quick Access** toolbar; the **New** dialog box is displayed.

2. In this dialog box, select **iso metric part.par** and choose the **OK** button to start a new part file.

3. Select the **Ordered** radio button from the **Model** group of the **Tools** tab; the **Ordered Part** environment is invoked.

4. Select the check box adjacent to the **Base Reference Planes** node under PathFinder; the visibility of the reference plane is turned on.

5. Choose the **Sketch** tool from the **Sketch** group of the **Home** tab; the **Sketch** Command bar is displayed and you are prompted to select a planar face or a reference plane.

6. Select the top plane to draw the profile; the selected plane gets oriented normal.

Evaluation Copy. Do not reproduce. For information visit www.cadcim.com

Drawing the Profile

It is recommended that you draw the first entity in the sketch by entering its exact values in the Command bar. This allows you to modify the drawing display area to fit the first entity. You can draw the other entities taking the reference of the first entity. This also helps you dimension the entities at a later stage.

1. Using the **Line** tool and options in the Command bar, draw a line of length 40 units with its start point at the origin.

2. Taking the reference of first line, draw the remaining entities in the profile. Use the arc mode of the **Line** tool to draw the tangent arcs in the profile. Now, draw circle by using the **Circle by Center Point** tool.

   While drawing the circle if the center point of the arc is not displayed, then move the cursor over the arc to display its center point. Use this center point to define the center point of the circle. The profile after drawing all entities is shown in Figure 3-42. For your reference, the entities in the sketch are numbered.

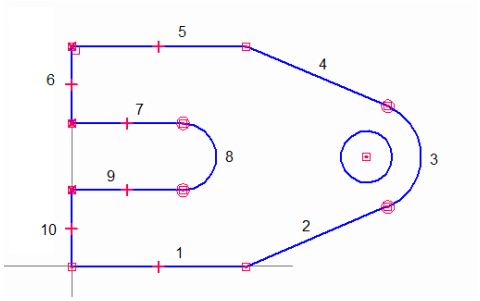

Figure 3-42 *Profile after drawing all entities*

Adding Relationships to the Profile

Next, you need to add relationships to the profile.

1. Choose the **Equal** tool from the **Relate** group of the **Home** tab and add this relationship between lines 1 and 5, 2 and 4, 6 and 10, and 7 and 9.

   Next, you need to make two arcs in the sketch tangent to the lines to which they are connected. The tangent relationship could have been applied to the sketch while drawing it. To check this relationship, see whether a small circle is displayed at all points where the arcs and the lines meet. The small circle is the relationship handle of the tangent relationship. Ideally, this handle must be displayed at four locations: the points where arc 3 meets lines 2 and 4 and the points where arc 8 meets lines 7 and 9.

2. Choose the **Tangent** tool from the **Relate** group of the **Home** tab and add the tangent relationship between the entities where it is missing.



Note

If you add a relationship that has already been added, the ***Solid Edge 2022*** *message box is displayed informing that the requested change conflicts with the existing relationships.*

Next, you need to horizontally align the center point of arc 8 with the center point of the circle by using the **Horizontal/Vertical** relationship.

3. Choose the **Horizontal/Vertical** tool from the **Relate** group of the **Home** tab. Move the cursor over arc 8 to display its center point. Select the center point when it is displayed.

Evaluation Copy. Do not reproduce. For information visit www.cadcim.com

Similarly, select the center point of the circle; a horizontal dashed line is displayed between the two centers indicating that they are horizontally aligned.

This completes the process of adding relationships to the profile. The profile after adding all relationships is shown in Figure 3-43.

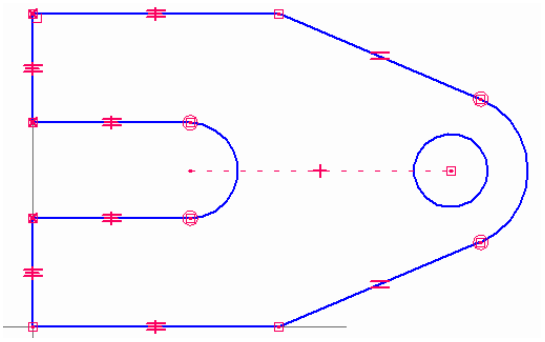

Figure 3-43 *Profile after adding all relationships*

Dimensioning the Profile

After adding relationships, you need to dimension the profile.

1. Choose the **Smart Dimension** tool from the **Dimension** group of the **Home** tab; you are prompted to click on the elements to dimension.

2. Select line 9 and place the dimension below the profile. Modify the value of the dimension to **20** in the **Dimension Value** edit box displayed with the dimension and then press ENTER.

3. Select line 1 and place the dimension below the previous dimension. Enter **40** in the **Dimension Value** edit box.

4. Select line 6 and the circle. Next, place the dimension below the profile and modify the value of the dimension to **80** in the **Dimension Value** edit box.

5. Select line 10 and place the dimension on the left of the profile. Enter **20** in the **Dimension Value** edit box.

6. Select lines 5 and 1, and place the dimension on the left of the previous dimension. Enter **60** in the **Dimension Value** edit box.

7. Select arc 3 and place the dimension on the right of the sketch. Enter **10** in the **Dimension Value** edit box.

8. Select the circle and place the dimension on the right of the sketch. Enter **12** in the **Dimension Value** edit box.

This completes the dimensioning of the profile. The profile after adding all required dimensions is shown in Figure 3-44.

Evaluation Copy. Do not reproduce. For information visit www.cadcim.com

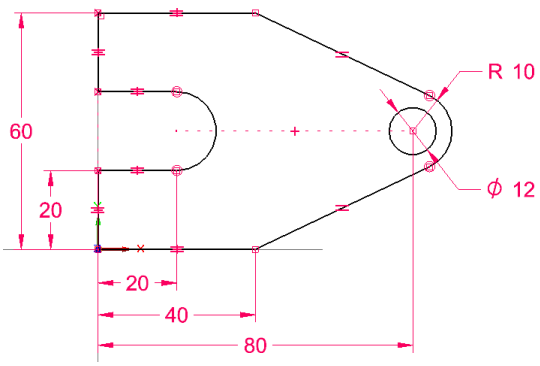

Figure 3-44 *Profile after adding all dimensions*

9. Choose the **Select** tool from the **Select** group of the **Home** tab to exit the active sketching tool.

10. Choose the **Close Sketch** tool from the **Ribbon**; the sketching environment is closed and the **Sketch** Command bar is displayed. Also, the current view is automatically changed to the Dimetric view.

11. Enter **Base Sketch** as the name of the sketch in the **Name** edit box of the Command bar. Choose the **Finish** button and then the **Cancel** button to exit the sketching environment; the sketch is displayed by the specified name in the PathFinder.

Saving the File

1. Choose the **Save** button from the **Quick Access** toolbar and save the file with the name *c03tut2* at the location given below.

   C:\Solid Edge\c03

2. Choose the **Close** button from the file tab bar to close the file.

Tutorial 3 Ordered

In this tutorial, you will create the profile for the revolved model shown in Figure 3-45. The profile is shown in Figure 3-46. You will use the parametric dimensions to complete the sketch.

(Expected time: 30 min)

Evaluation Copy. Do not reproduce. For information visit www.cadcim.com

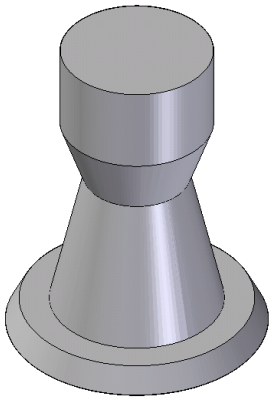

Figure 3-45 Model for Tutorial 3

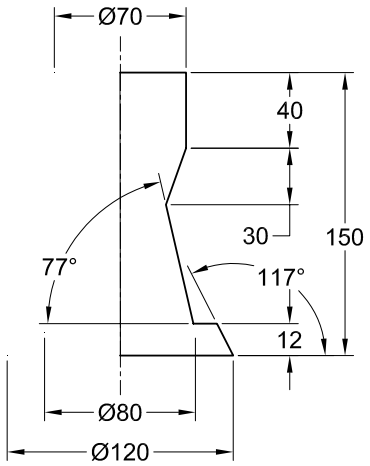

Figure 3-46 Profile to be drawn for Tutorial 3

The following steps are required to complete this tutorial:

a. Start a new part file.
b. Switch to the **Ordered Part** environment.
c. Invoke the sketching environment.
d. Draw the required profile by using the **Line** tool.
e. Add the required dimensions to the sketch.
f. Save the file and close it.

Starting a New Part File and Selecting the Sketching Plane

You can start a new part file by choosing the **New** tool from the **Quick Access** toolbar which remains on the screen after you close all the files.

1. Choose the **New** tool from the **Quick Access** toolbar to display the **New** dialog box.

2. Select **iso metric part.par** and choose the **OK** button to start a new part file.

3. Select the **Ordered** radio button from the **Model** group of the **Tools** tab; the **Ordered Part** environment is invoked.

4. Select the check box adjacent to the **Base Reference Planes** node in the PathFinder; the visibility of the reference plane is turned on.

5. Choose the **Sketch** tool from the **Sketch** group of the **Home** tab; the **Sketch** Command bar is displayed and you are prompted to select a planar face or a reference plane.

6. Select the front plane to draw the profile; the selected plane is oriented normal to the viewing direction. Also, the **Line** tool will be invoked by default.

Evaluation Copy. Do not reproduce. For information visit www.cadcim.com

Drawing the Profile Using the Line Tool

To draw the profile, you need to draw the sketch from the lower left corner. The bottom horizontal line will be the first entity to be drawn.

1. Move the cursor to the origin and specify it as the start point of the first line.

2. Enter **60** as the value of length and **0** as the value of angle for the first line in the dynamic edit box. Then, press ENTER to draw the first line segment.

3. Pan the drawing by using the **Pan** tool available in the status bar such that the origin is moved close to the middle of the bottom edge of the drawing window.

4. Complete the sketch of the revolved model by drawing the remaining lines by taking the reference of the first line, refer to Figure 3-47. The lines in this sketch have been numbered for your reference.

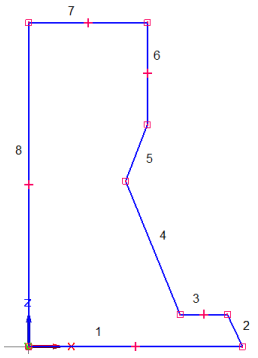

Figure 3-47 *Profile for the revolved model*

Adding Dimensions to the Profile

Next, you need to add dimensions to the profile. Since it is a profile for the revolved model, you need to add symmetric diameter dimensions to define the diameter of the revolved feature, refer to Figure 3-46.

1. Make sure that the **Relationship Colors** button is chosen in the **Evaluate** group of the **Inspect** tab.

2. Choose the **Symmetric Diameter** button from the **Dimension** group of the **Home** tab; you are prompted to select the dimension origin element which acts as the axis of revolution. In this profile, line 8 is the dimension origin element.

3. Select line 8 and then select the right endpoint of line 1. Choose the **Half/Full** button from the Command bar, if it has not been chosen.

4. Place the dimension below the sketch. You may need to change the drawing display area by choosing the **Zoom** button.

5. Enter **120** as the value of the dimension in the **Dimension Value** edit box.

   Line 8, which was selected as the dimension origin element, is not required to be selected again. You can directly select other dimension measurement elements to add symmetric diameter dimensions.

6. Select the lower endpoint of line 4. You will notice that the dimension is placed automatically. Modify the value of dimension to **80** in the **Dimension Value** edit box.

   You will notice that as you place this dimension, the previous symmetric dimension also moves. Now, if you add the symmetric dimension to line 7 in the same sequence, the first

Evaluation Copy. Do not reproduce. For information visit www.cadcim.com

two dimensions will also move while placing the third dimension. Therefore, you first need to exit the current sequence of dimensioning.

7. Right-click to exit the current sequence of dimensioning; you are again prompted to select the dimension origin element.

8. Select line 8 and then the right endpoint of line 7; the symmetric diameter dimension is attached to the cursor.

9. Place the dimension above the sketch and modify its value to **70.** Then, press ENTER.

   Next, you need to add linear and angular dimensions to the remaining entities by using the **Smart Dimension** tool.

10. Choose the **Smart Dimension** tool from the **Dimension** group of the **Home** tab; you are prompted to click on the elements to dimension.

11. Select line 2; an aligned dimension is attached to the cursor. Press and hold the SHIFT key and move the cursor to the right of the sketch. The vertical dimension of line 2 is displayed.

12. Place the dimension on the right of the sketch and modify its value to **12** in the **Dimension Value** edit box. Next, press ENTER.

13. Select lines 1 and 2, and then choose the **Angle** button from the Command bar. Move the cursor to the right of the sketch to display the major angle dimension. Place the dimension on the right of the sketch and enter **117** in the **Dimension Value** edit box.

14. Select line 3 and choose the **Angle** button from the Command bar, and then select line 4. Next, move the cursor to the left of line 4 to display the angular dimension. Place the dimension on the left of line 4 and enter **77** in the **Dimension Value** edit box.

15. Select line 5 and press and hold the SHIFT key to display the vertical dimension of line 5. Place the dimension on the right of the sketch and enter **30** in the **Dimension Value** edit box.

16. Select line 6 and place the dimension on the right of the sketch in line with the previous dimension. Modify the value of dimension to **40**.

17. Select line 8 and place the dimension on the left of the sketch. Modify the dimension value to **150**.

   This completes the dimensioning of the sketch. The sketch after adding all dimensions is shown in Figure 3-48. Notice that as the option for displaying the fully constrained sketch in a different color was chosen from the **Evaluate** group of the **Inspect** tab, the sketch will turn black after placing the last dimension.

Evaluation Copy. Do not reproduce. For information visit www.cadcim.com

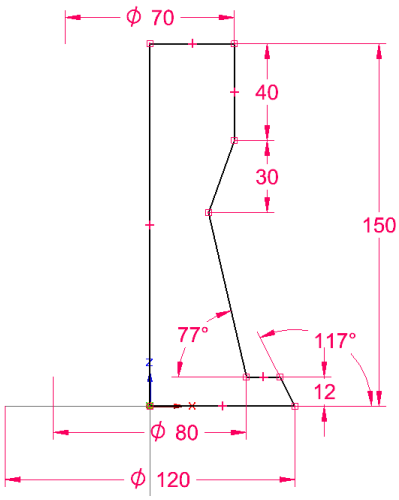

Figure 3-48 *The final model with all dimensions*

Saving the File

1. Choose the **Select** tool from the **Select** group of the **Home** tab.

2. Choose the **Close Sketch** tool from the **Close** group of the **Home** tab; the sketching environment is closed and the **Sketch** Command bar is displayed. Also, the current view is automatically changed to the Dimetric view.

3. Choose the **Save** button from the **Quick Access** toolbar and save the file with the name *c03tut3* at the location given below:

   C:\Solid Edge\c03

4. Choose the **Close** button from the file tab bar to close the file.

Self-Evaluation Test

Answer the following questions and then compare them to those given at the end of this chapter:

1. The _____ relation forces two arcs, two circles, or an arc and a circle to share the same center point.

2. The _____ dimensions are applied to dimension a circle or an arc in terms of its diameter.

3. The tools available in the _____ drop-down are used to specify the orientation of dimensions.

4. The _____ dimensions measure the actual distance of the inclined lines.

Evaluation Copy. Do not reproduce. For information visit www.cadcim.com

5. The _____ relation is used to fix the orientation or the location of the selected sketched entity or the keypoint of the sketched entity.

6. By default, _____ dimensions are assigned to the circles.

7. All geometric relationships have same relationship handles associated with them. (T/F)

8. You can set the symmetry axis before invoking the **Symmetric** tool in the **Ordered Part** environment. (T/F)

9. The **Coordinate Dimensions** tool is used to dimension a sketch with respect to a common origin point. (T/F)

10. The symmetric diameter dimensions are used to dimension the sketches of the revolved components. (T/F)

Review Questions

Answer the following questions:

1. Which of the following dimensions is applied to the arcs by default?

(a) Radial (b) Diameter
(c) Angular (d) Linear

2. Which of the following dimensions is used to create angular coordinate dimensions with respect to a common origin point?

(a) Angular (b) Angular Coordinate
(c) Linear (d) Coordinate

3. Which of the following relationships is used to fix the orientation or location of a selected sketched entity or a keypoint of the sketched entity?

(a) Fix (b) Lock
(c) Hide (d) None of these

4. Which of the following relationships is used to force the selected sketched entities to become symmetrical about a symmetry axis?

(a) Symmetric (b) Collinear
(c) Coincident (d) Horizontal

5. Which of the following relationships forces a selected line to become normal to another line, arc, circle, or ellipse?

(a) Symmetrical (b) Collinear
(c) Coincident (d) Perpendicular

Evaluation Copy. Do not reproduce. For information visit www.cadcim.com

6. You cannot modify a dimension after placing it. (T/F)

7. While placing the angular dimensions, you can select the option to display the major or minor angular value. (T/F)

8. You can add a prefix or a suffix to the dimension values. (T/F)

9. In Solid Edge, you can also add tolerance to dimensions in the sketching environment. (T/F)

10. The aligned dimensions cannot be used to dimension the lines that are not parallel to the X axis or the Y axis. (T/F)

EXERCISES

Exercise 1

Draw a profile for the base feature of the model shown in Figure 3-49. The profile to be drawn is shown in Figure 3-50. Use the relationships and parametric dimensions to complete the profile. **(Expected time: 30 min)**

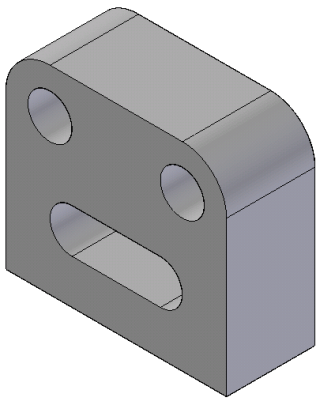

Figure 3-49 *Model for Exercise 1*

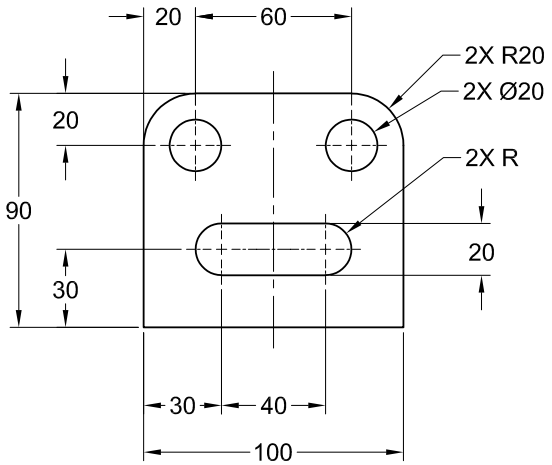

Figure 3-50 *Profile for Exercise 1*

Evaluation Copy. Do not reproduce. For information visit www.cadcim.com

Exercise 2

Draw the sketch of the model shown in Figure 3-51. The sketch is shown in Figure 3-52. After drawing the sketch, add the required relations and dimensions to it.

(Expected time: 30 min)

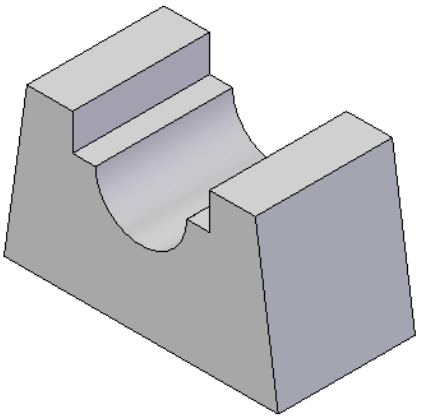

Figure 3-51 *Model for Exercise 2*

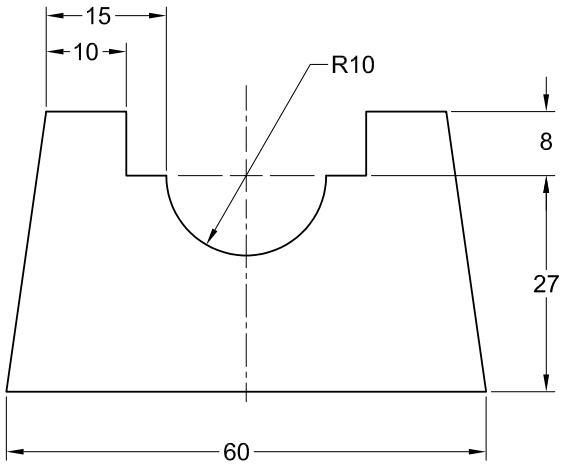

Figure 3-52 *Sketch for Exercise 2*

Exercise 3

Draw the profile for the base feature of the model shown in Figure 3-53. The profile to be drawn is shown in Figure 3-54. Use the relationships and parametric dimensions to complete the profile.

(Expected time: 30 min)

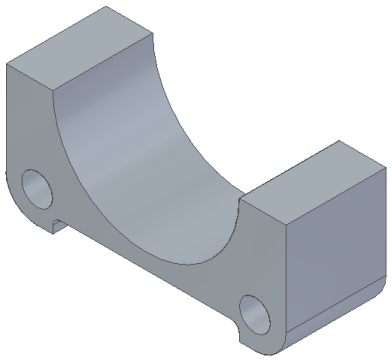

Figure 3-53 *Solid model for Exercise 3*

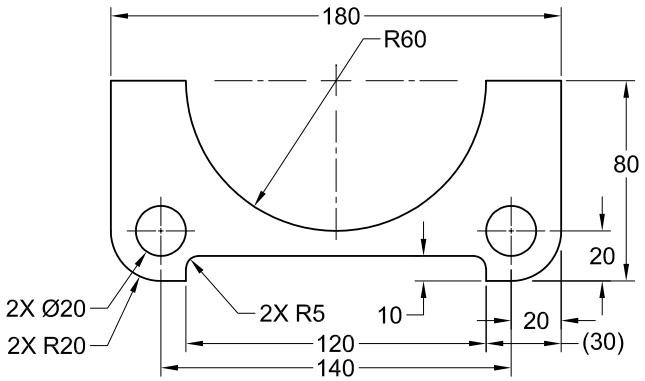

Figure 3-54 *Sketch for Exercise 3*

Evaluation Copy. Do not reproduce. For information visit www.cadcim.com

Exercise 4

Draw the profile for the revolve feature of the model shown in Figure 3-55. The profile to be drawn is shown in Figure 3-56. Use the relationships and parametric dimensions to complete the profile. **(Expected time: 30 min)**

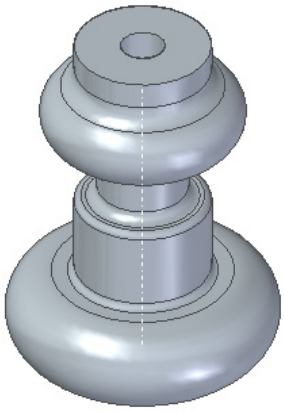

Figure 3-55 *Solid model for Exercise 4*

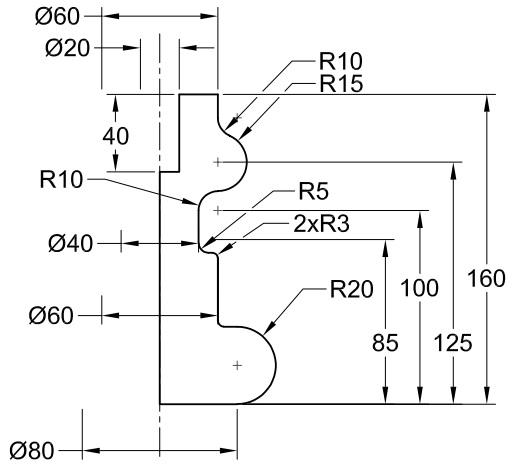

Figure 3-56 *Sketch for Exercise 4*

Exercise 5

Draw the profile for the base feature of the model shown in Figure 3-57. The profile to be drawn is shown in Figure 3-58. Use the relationships and parametric dimensions to complete the profile. **(Expected time: 30 min)**

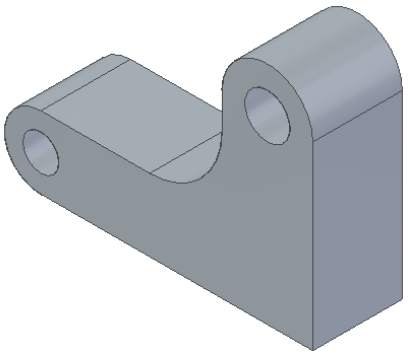

Figure 3-57 *Model for Exercise 5*

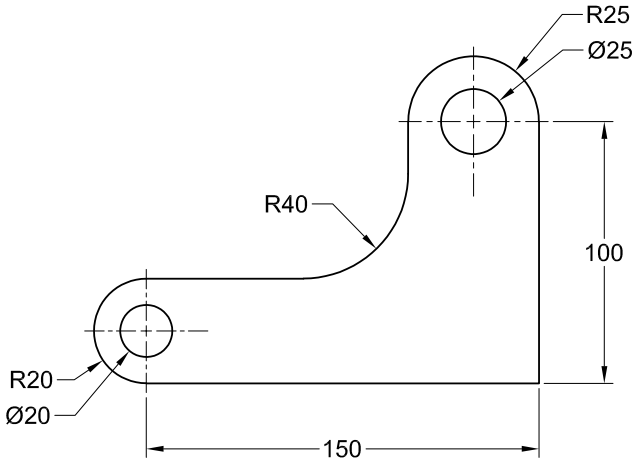

Figure 3-58 *Profile for Exercise 5*

Evaluation Copy. Do not reproduce. For information visit www.cadcim.com

Answers to Self-Evaluation Test

1. Concentric, **2.** Diameter, **3. Orientation**, **4.** Aligned, **5.** Lock, **6.** Diameter, **7.** F, **8.** T, **9.** T, **10.** T

Evaluation Copy. Do not reproduce. For information visit www.cadcim.com