Chapter 2

Drawing Sketches



Learning Objectives

After completing this chapter, you will be able to:

- *Understand various sketching tools*
- *Understand various drawing display tools*
- *Use various selection methods*
- *Delete sketched entities*

SKETCHING IN THE PART ENVIRONMENT

Most solid models consist of closed sketches, placed features, and reference features. A closed sketch is a combination of two-dimensional (2D) entities such as lines, arcs, circles, and so on. The features based on a closed sketch are created by using these entities. Generally, a closed sketch-based feature is the base feature or the first feature. For example, the solid model shown in Figure 2-1 is created by using the sketch shown in Figure 2-2.

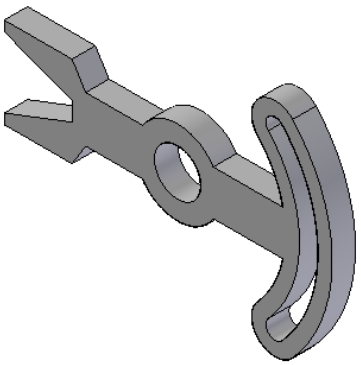

Figure 2-1 *Solid model*

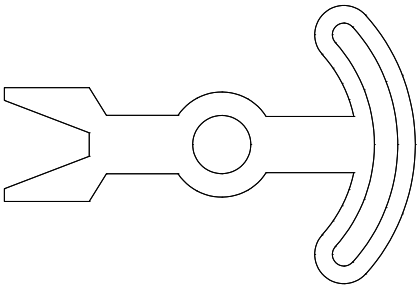

Figure 2-2 *Profile of the solid model*

In most designs, you first need to draw a sketch, add relationships and dimensions to it, and then convert it into a base feature. After doing so, you can create advanced features like cuts, holes, ribs, shells, rounds, chamfers, and so on, on the base feature.

There are two methods to start a new part document. The first one is start a new part document by using the **Application Button** in the home screen and the second one is using the **New** button from the **Quick Access** toolbar. These methods are discussed next.

Starting a New Part File by Using the Application Button

To start the **Part** environment, first you need to start Solid Edge. To do so, double-click on the shortcut icon of Solid Edge on the desktop of your computer.

If you are starting Solid Edge 2022 for the first time, the system will prepare to start the Solid Edge 2022. Once all files have been loaded, Solid Edge 2022 home screen along with the theme selection window will be displayed. In the theme selection window, refer to Figure 2-3, select the required user interface theme and then choose the **OK** button; the **Solid Edge** home screen will be displayed, as shown in Figure 2-4. Next, click on the **Application Button** and choose **New** > **ISO Metric Part** from the Application menu to start a new part document in the part modeling environment. The **ISO Metric** templates in the **New** area of the Application menu will be displayed only when you have selected **ISO Metric** in the **Modeling standard** drop-down during the installation.



Note

1. The theme selection window will be displayed when you start Solid Edge for the first time after installation.

2. In this textbook, the ***Balanced (Solid Edge Default)*** *theme is used as the user interface theme.*

Evaluation Copy. Do not reproduce. For information visit www.cadcim.com

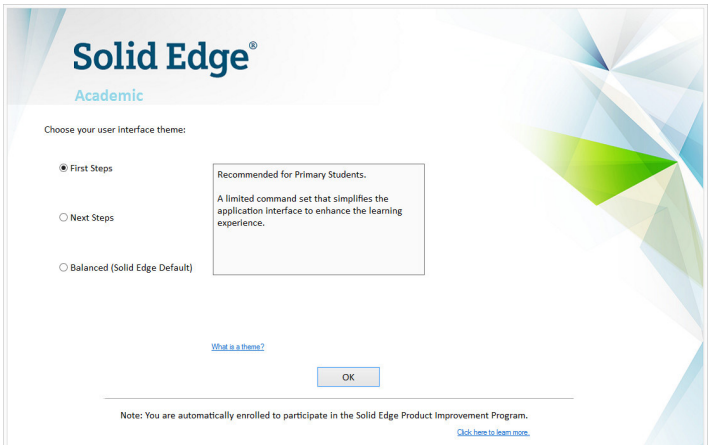

Figure 2-3 *Theme selection window of Solid Edge*



Figure 2-4 *Home screen of Solid Edge 2022*

Starting a New Part File by Using the New Dialog Box



You can start a new part file by using the **New** dialog box. To invoke this dialog box, choose the **New** tool from the **Quick Access** toolbar of the home screen; the **New** dialog box will be displayed, as shown in Figure 2-5. Alternatively, you can choose **Application Button > New > New** to invoke the **New** dialog box.

Evaluation Copy. Do not reproduce. For information visit www.cadcim.com

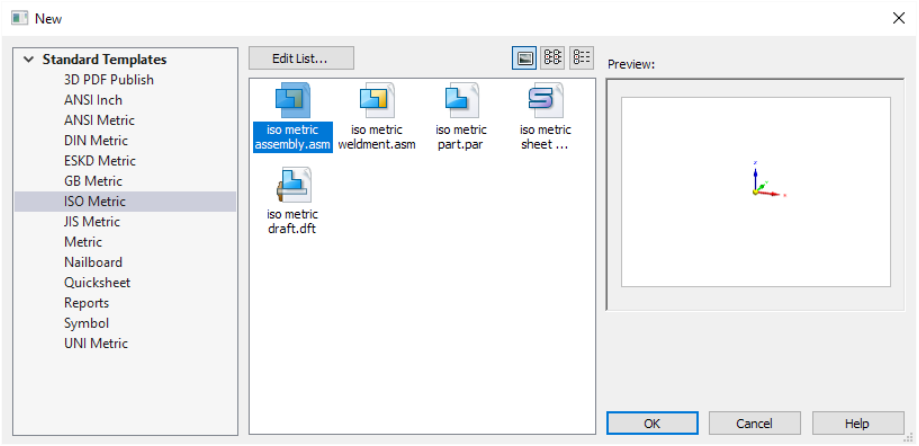

Figure 2-5 *The* ***New*** *dialog box*

The left pane of the **New** dialog box contains the **Standard Templates** drop-down list having standard templates such as **ANSI Metric**, **GB Metric**, **ISO Metric**, and so on. In this list, the **ISO Metric** standard template is selected by default. In the **ISO Metric** standard template, the default templates for starting various environments are displayed in the area adjacent to the **Standard Templates** drop-down list in the **New** dialog box.

To open a new document in the **Synchronous Part** environment of Solid Edge 2022, select the **iso metric part.par** template and then choose the **OK** button from the **New** dialog box. Alternatively, double-click on **iso metric part.par**; the new document will open in the **Synchronous Part** environment as it is the default environment.

The options in the **New** dialog box are discussed next.

Edit List Button

The **Edit List** button is available adjacent to the **Standard Templates** drop-down list. When you choose this button, the **Template List Creation** dialog box will be displayed, as shown in Figure 2-6.

In this dialog box, you can change the position of the templates displayed in the **Templates** area. To do so, choose the **Move Up** or **Move Down** button to move the selected template up or down. You can also create a new customized standard template and also rename and delete it by choosing the corresponding button available at the left corner of the **Template List Creation** dialog box. The newly created standard template name will be displayed under the **Custom Templates** drop-down list available on the left pane of the dialog box. The newly created custom standard templates will also be displayed in the **Custom Templates** drop-down list in the **New** dialog box.



Note

You can also create a customized standard template in the dialog box by creating a folder with the name Custom Template at the location Program File > Siemens > Solid Edge 2022 > Template and then saving a customized template in it. This template will automatically be added to the ***Standard Templates*** *drop-down list.*

Evaluation Copy. Do not reproduce. For information visit www.cadcim.com

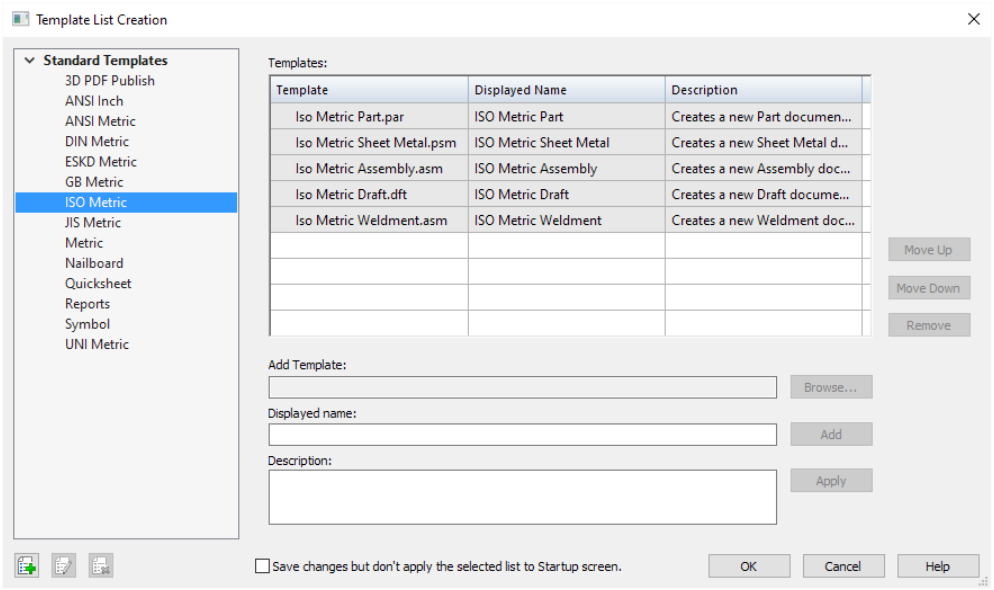

Figure 2-6 *The* ***Template List Creation*** *dialog box*

Large Icon

The **Large Icon** button is used to display the templates of the **New** dialog box in the form of large icons.

List

The **List** button is used to display the templates of the **New** dialog box in the form of a list.

Detail

The **Detail** button is used to list the details of the templates in various tabs of the **New** dialog box. When you choose this button, the area on the left will be divided into four columns. The first column lists the names of the templates, the second column lists the sizes, the third column lists the type of the template files, and the last column lists the dates when the templates were last modified.

Preview Area

The **Preview** area shows a preview of the selected template.

Figure 2-7 shows a new Solid Edge document in the **Synchronous Part** environment. This figure also shows various components in the part document of Solid Edge. On invoking this environment, two triads are displayed. Also, the **Sketching** tab is added to the **Ribbon**. This tab is used to create sketches.

Note

In the ***Synchronous Part*** *environment, the basic drawing tools are available in the* ***Home*** *tab as well as in the* ***Sketching*** *tab.*

Evaluation Copy. Do not reproduce. For information visit www.cadcim.com

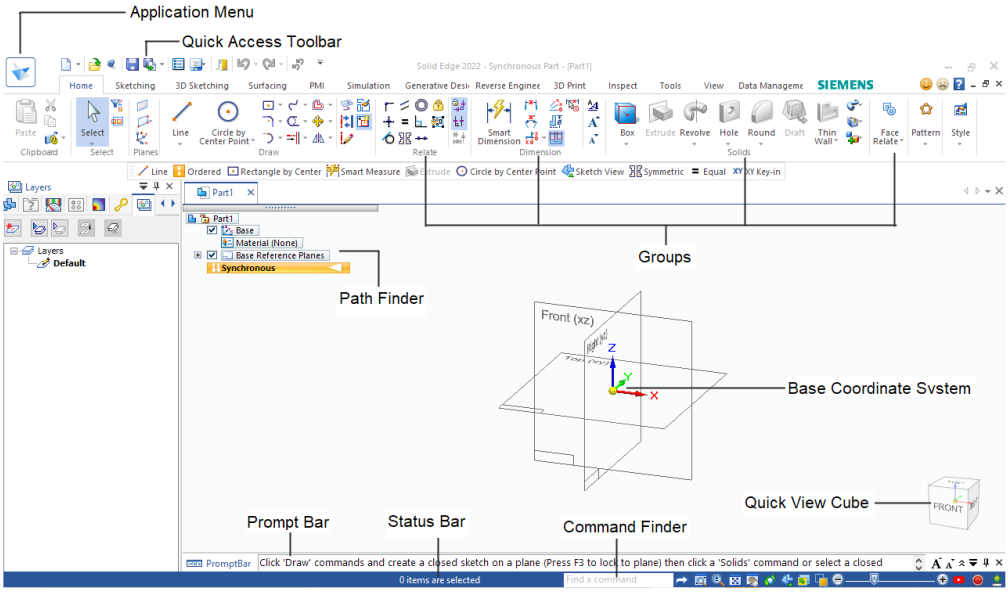

Figure 2-7 *New document in the* ***Synchronous Part*** *environment*

TRANSITION BETWEEN PART ENVIRONMENTS

In Solid Edge, there are two modeling environments coexisting in the same file, the **Synchronous Part** environment and **Ordered Part** environment. The **Synchronous Part** environment is used to create synchronous features whereas the **Ordered Part** environment is used to create ordered features. In Solid Edge, you can work in both the environments in the same file. You can switch between the Synchronous and Ordered environments at any time during the modeling process. To do so, right-click in the drawing window; a shortcut menu will be displayed. Choose the **Transition to Ordered** or **Transition to Synchronous** option from the shortcut menu to switch from **Synchronous Part** environment to **Ordered Part** or vice-versa. You can also switch between environments by choosing the required modeling environment from the **Model** group of the **Tools** tab.

STARTING A SKETCH IN THE PART ENVIRONMENT

In the **Synchronous Part** environment, a triad representing the base coordinate system is displayed at the center of the graphics area. You can draw sketches on any of the principal planes of the base coordinate system. To draw a sketch, invoke a sketching tool from the **Draw** group; two green lines of infinite length get attached to the cursor. Move the cursor toward the axis of the base coordinate system; you will notice that the respective plane gets highlighted and a Lock symbol is displayed on it.

You can also select the required plane by using the **QuickPick** listbox. To do so, move the cursor toward the base coordinate system and wait for a while; a mouse symbol will be displayed near the cursor. Next, right-click; the **QuickPick** list box will be displayed with a list of alternate planes that can be selected for drawing the sketches, as shown in Figure 2-8. Now, you can select the required plane for sketching.

Evaluation Copy. Do not reproduce. For information visit www.cadcim.com

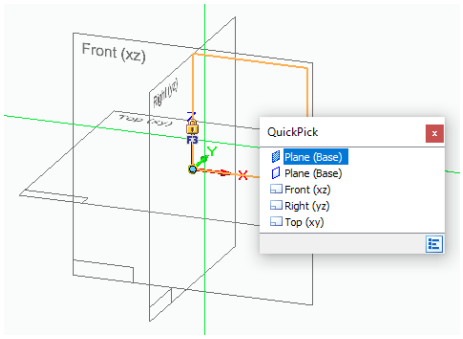

Figure 2-8 *The **QuickPick** list box with a list of planes*

Note

*In Solid Edge, the base reference planes are hidden by default. You can display the base reference planes individually or in group by selecting the **Base Reference Planes** check box in the PathFinder.*

Locking and Unlocking Sketching Plane

If you want all input commands to be in the same plane, you can lock that sketch plane. It implies that all the sketches and their dimensions are drawn on the same plane. To lock the plane, click on the Lock symbol that will be displayed on selecting any principal plane or face of the solid. On doing so, the sketch plane will get locked and the Lock symbol will be displayed at the upper right corner of the drawing window. Now, you can draw sketches, add dimensions to them, and so on. In this case, you will notice that the sketches along with their relationships and dimensions are on the same plane, and will be added as a single sketched entity under the **Sketches** node of the PathFinder. The plane will remain locked until you unlock it by clicking on the Lock symbol again. If you want to draw a sketch in some other plane, first you need to unlock the plane and then invoke a sketching tool again. Next, select the required plane.

However, to draw a sketch in the **Ordered Part** environment, switch to the **Ordered Part** environment and choose the **Sketch** tool from the **Sketch** group of the **Home** tab; you will be prompted to click on a planar face or a reference plane. Select a reference plane, the selected plane will be oriented parallel to the screen and the sketching environment will be invoked. Now, you can draw the sketch using various sketching tools that are discussed next.

SKETCHING TOOLS

In the **Synchronous Part** environment, the sketching tools are available in the **Ribbon** of the synchronous part environment. But in the **Ordered Part** environment, you first need to invoke the sketch environment to use a sketching tool. All the tools required to create a profile or a sketch in Solid Edge are available in the **Draw** group and are discussed next.

Line Tool

Ribbon: Home > Draw > Line

In any design, lines are the most widely used sketched entities. In Solid Edge, the **Line** tool is used to draw straight lines, symmetric lines as well as to draw the tangent or

Evaluation Copy. Do not reproduce. For information visit www.cadcim.com

normal arcs originating from the endpoint of a selected line. The properties of the line are displayed in the Command bar.

Drawing Straight Lines

To draw a straight line, choose the **Line** tool; the **Line** Command bar will be displayed, refer to Figure 2-9. Also you will be prompted to select the first point for the line. Specify the point in the drawing window by pressing the left mouse button; a rubber-band line will be attached to the cursor. Also, you will be prompted to select the second point for the line. Note that on moving the cursor in the drawing window, the length and angle of the line also gets modified accordingly in the **Line** Command bar. Next, specify the endpoint of the line in the drawing window by pressing the left mouse button. Alternatively, you can draw a line by specifying its length and angle in the **Line** Command bar.

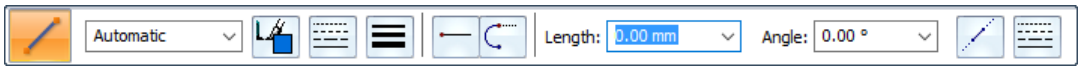

Figure 2-9 *The* ***Line*** *Command bar*

While drawing a line, you will notice that some symbols are displayed on the right of the cursor. For example, after specifying the start point of the line, if you move the cursor in the horizontal direction, a symbol similar to a horizontal line will be displayed. This symbol is called the relationship handle and it indicates the relationship that will be applied to the entity being drawn. In the above-mentioned case, the horizontal relationship handle is displayed on the right of the cursor. This relationship will ensure that the line you draw is horizontal. These relationships are automatically applied to the profile while drawing a line.



Note

Relationships are also applied between the sketched entities and the reference planes. You will learn more about relationships in the later chapters.

The process of drawing lines does not end after defining the first line. You will notice that as soon as you define the endpoint of the first line, another rubber-band line starts. The start point of this line becomes the endpoint of the first line and the endpoint of the new line is attached to the cursor.

The process of drawing consecutive lines continues until you right-click to terminate it. However, even after right-clicking, the **Line** tool will remain active and you will be prompted to specify the first point of the line. You can terminate the **Line** tool by choosing the **Select** tool from the **Select** group or by pressing the ESC key. Figures 2-10 and 2-11 show continuous lines being drawn.

While drawing lines, you will notice that if the cursor is horizontally or vertically aligned with the endpoint or midpoint of a line or reference plane, then the dashed lines are displayed. These dashed lines are called alignment indicators and are used to indicate the horizontal or vertical alignment of the current location of the cursor with a point. Figure 2-12 shows the alignment indicators originating from the endpoints of the existing lines.



Tip

If the alignment indicator is not displayed, move the cursor over the entity from which you want the alignment indicator to originate; the entity will turn orange in color and the alignment indicator will be displayed.

Evaluation Copy. Do not reproduce. For information visit www.cadcim.com

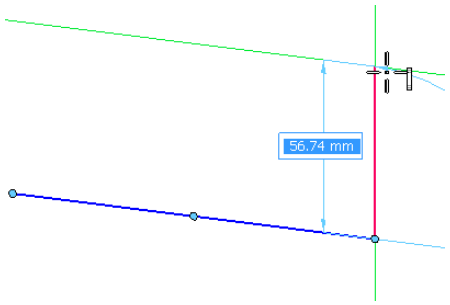

Figure 2-10 Vertical relationship handle displayed while drawing vertical line

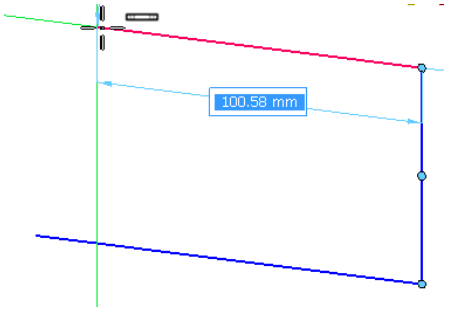

Figure 2-11 Horizontal relationship handle displayed while drawing horizontal line

Drawing Symmetric Lines

To draw a symmetric line when the **Line** tool is active, press the S key; you will be prompted to select the first point for the line. Specify the point in the drawing window by pressing the left mouse button; a symmetric rubber-band line extendible equally in both sides will be displayed attached to the cursor. Also, you will be prompted to select the second point for the line. Click to specify the endpoint of the symmetric line. After drawing the required symmetric line, the system will automatically switch back to the line mode. You can activate the line mode or the symmetric line mode by pressing the L or S key, respectively.

Drawing Tangent and Normal Arcs

As mentioned earlier, you can draw a tangent or a normal arc by using the **Line** tool. To draw an arc when the **Line** tool is activated, press the A key or choose the **Arc** button from the Command bar. On doing so, you will notice that the **Length** and **Angle** edit boxes in the Command bar are replaced by the **Radius** and **Sweep** edit boxes, respectively. These edit boxes can be used to define the radius and the included angle of the resulting arc.

Also, a small circle will be displayed at the start point of the arc. This circle is divided into four regions. These regions are called intent zones and are used to define the type of the arc to be created. To create an arc tangent to a line, move the cursor through a small distance in the zone that is tangent to the line; the tangent arc will be displayed. Next, click to specify the endpoint of the arc. Similarly, if you move the cursor in the zone that is normal to the line, the normal arc will be displayed. Next, click to specify the endpoint of the arc. After drawing the required arc, the system will automatically switch back to the line mode. You can activate the line mode or the arc mode by pressing the L or the A key, respectively. Figure 2-13 shows a tangent arc being drawn using the **Line** tool.



Tip

If you have selected an incorrect point as the start point of a line, right-click to cancel it; you will again be prompted to specify the first point of the line.

The buttons in the **Line** Command bar are used to specify the color, type, and width of lines. You can also draw a projection line of infinite length by choosing the **Projection Line** button from the **Line** Command bar. Projection lines are generally used in the **Draft** environment.

Evaluation Copy. Do not reproduce. For information visit www.cadcim.com

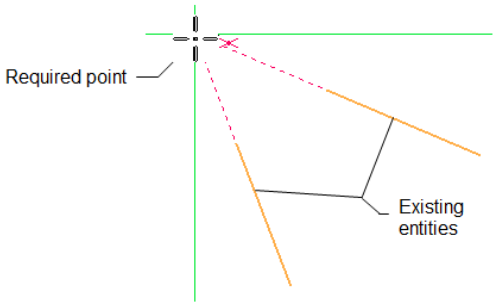

Figure 2-12 The alignment indicators originating from the endpoints of the existing lines

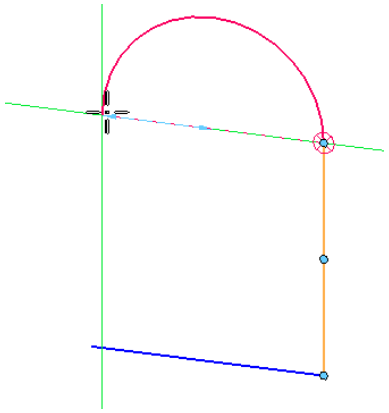

*Figure 2-13 A tangent arc drawn using the **Line** tool*

Point Tool

Ribbon: Home > Draw > Line drop-down > Point

Points are generally used as references for drawing other sketched entities. To place a point, choose the **Point** tool from the **Line** drop-down in the **Draw** group, as shown in Figure 2-14; you will be prompted to click for the point. Place the point by defining its location in the drawing window or by entering its coordinates in the **Point** Command bar.

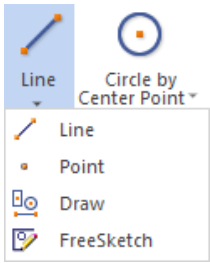

*Figure 2-14 The **Line** drop-down*

Draw Tool

Ribbon: Home > Draw > Line drop-down > Draw

The **Draw** tool is used to create a precise geometry by sketching a freehand drawing with the help of pen, finger, or mouse. When you choose the **Draw** tool from the **Line** drop-down, the **Draw** Command bar will be displayed. The commonly used buttons in the **Draw** Command bar are discussed next.

Create Geometry

This button is chosen by default. As a result, when you draw a freehand sketch by dragging the cursor, the software recognizes the sketch and convert it into a precise geometry which can be a combination of lines, arcs, or splines.

Trim Geometry

When you choose this button, you can remove any portion of a sketched entity by dragging the cursor across the portion of sketched entity you want to remove.

Note

*The **Draw** tool is enabled only on Windows 10, version 1607 and later.*

Evaluation Copy. Do not reproduce. For information visit www.cadcim.com

FreeSketch Tool

Ribbon: Home > Draw > Line drop-down > FreeSketch

The **FreeSketch** tool enables you to draw lines, arcs, rectangles, and circles by converting a rough sketch into a precision drawing. When you choose the **FreeSketch** tool from the **Line** drop-down, the **FreeSketch** Command bar will be displayed, as shown in Figure 2-15. The commonly used buttons in the **FreeSketch** Command bar are discussed next.



Figure 2-15 *The* ***FreeSketch*** *Command bar*

Adjust On

This button is chosen by default. As a result, when you draw a rough line sketch, the software recognizes the sketch and adjusts its orientation as horizontal or vertical. When you draw a rough curve, the sketch is automatically recognized as an arc.

Adjust Off

When you choose this button, the software does not recognize the rough sketch and the sketch will remain the same as drawn.

Drawing Circles

In Solid Edge, circles can be drawn by using three tools. These tools and the tools to draw ellipses are grouped together in the **Circle** drop-down of the **Draw** group, as shown in Figure 2-16. The tools used to draw circles are discussed next.

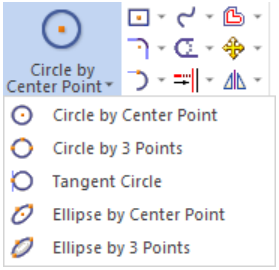

Figure 2-16 *The* ***Circle*** *drop-down*

Circle by Center Point Tool

Ribbon: Home > Draw > Circle drop-down > Circle by Center Point

This is the most widely used tool for drawing circles. In this method, you need to specify the center point for the circle and a point on it. The point on the circle defines the radius of the circle. To draw a circle using this method, choose the **Circle by Center Point** tool from the **Draw** group; the **Circle by Center Point** Command bar will be displayed and you will be prompted to specify the center point of the circle. Specify the center point of the circle in the drawing window; you will be prompted to specify a point on the circle. Specify a point on the circle to define the radius. Alternatively, you can enter the value of the diameter or radius in the Command bar. Figure 2-17 shows a circle drawn using this method.

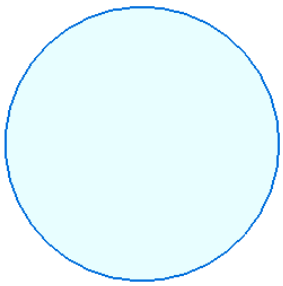

Figure 2-17 *Circle drawn using the* ***Circle by Center Point*** *tool*

Evaluation Copy. Do not reproduce. For information visit www.cadcim.com

Circle by 3 Points Tool

Ribbon: Home > Draw > Circle drop-down > Circle by 3 Points

This tool is used to draw a circle by specifying three points lying on it. To draw a circle using this method, choose the **Circle by 3 Points** tool in the **Draw** group; you will be prompted to specify the first point and then the second point for the circle. Specify these two points; small reference circles will be displayed on these two points, as shown in Figure 2-18. Also, you will be prompted to specify the third point. Specify the third point for the circle to create it.

Tangent Circle Tool

Ribbon: Home > Draw > Circle drop-down > Tangent Circle

This tool is used to draw a circle tangent to one or two existing entities. To draw a circle using this method, choose the **Tangent Circle** tool from the **Circle** drop-down in the **Draw** group; you will be prompted to specify the first point on the circle. The circle will be drawn using two or three points, depending upon how you specify the first point of the circle. If you specify the first point on an existing entity, then you will be prompted to specify the second point and the circle will be drawn using these two points. However, if you do not specify the first point on any existing entity, then you need to define the circle using three points.

When you move the cursor close to an existing entity to specify the second or third point, the tangent relationship handle will be displayed. Now, if you specify the point, the resulting circle will be tangent to the selected entities. Also, small reference circles will be displayed at the points where the circle is tangent to the selected entities. Figure 2-19 shows a circle tangent to two lines.

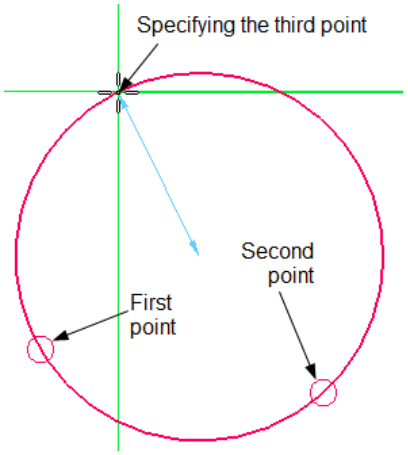

Figure 2-18 *Circle drawn using the* ***Circle by 3 Points*** *tool*

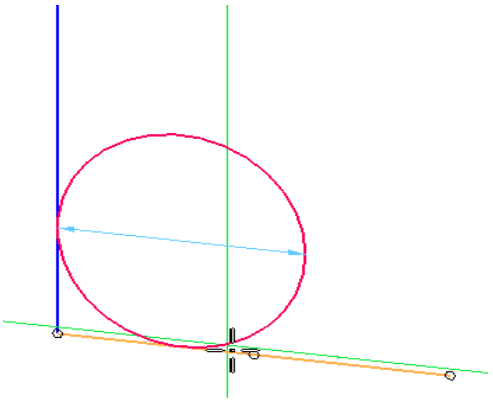

Figure 2-19 *Circle drawn using the* ***Tangent Circle*** *tool*

Drawing Ellipses

In Solid Edge, you can draw ellipses using two methods that are discussed next.

Evaluation Copy. Do not reproduce. For information visit www.cadcim.com

Ellipse by Center Point Tool

Ribbon: Home > Draw > Circle drop-down > Ellipse by Center Point

This tool is used to draw a center point ellipse. In this method, first you need to define the center point of an ellipse. On doing so, you will be prompted to specify the endpoint of the primary axis. Specify the endpoint of the primary axis; you will be prompted to specify the endpoint of the secondary axis. Specify the endpoint of the secondary axis; the ellipse will be created. You can also draw an ellipse by entering the required dimensions in the Command bar and then specifying its center point.

Ellipse by 3 Points Tool

Ribbon: Home > Draw > Circle drop-down > Ellipse by 3 Points

This tool is used to draw an ellipse by specifying three points. The first two points are the first and second endpoints of the primary axis of the ellipse and the third point is a point on the ellipse. To draw an ellipse by using this method, choose the **Ellipse by 3 Points** tool from the **Draw** group; you will be prompted to specify the first endpoint. Specify the first endpoint, you will be prompted to specify the second endpoint of the primary axis of an ellipse. Specify the second point; a reference ellipse will be displayed and you will be prompted to specify a point on the ellipse. The primary axis will act as the major axis or the minor axis, depending upon the location of point specification. Figure 2-20 shows a profile in which the cursor is moved to define the third point on the ellipse. Note that you can also draw an ellipse by specifying values in the **Ellipse by 3 Points** Command bar, which is displayed on invoking this tool.

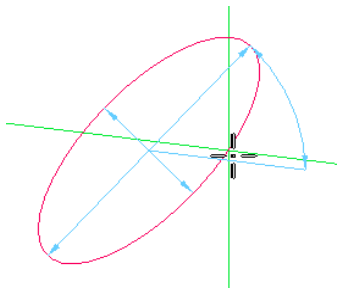

Figure 2-20 *An ellipse drawn by specifying three points*

Drawing Arcs

In Solid Edge, tools to draw arc are grouped together in the **Arc** drop-down, as shown in Figure 2-21. You can draw arcs using three methods. These methods are discussed next.

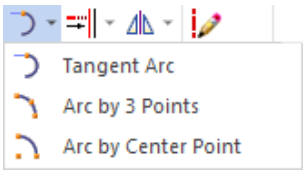

Figure 2-21 *The **Arc** drop-down*

Tangent Arc Tool

Ribbon: Home > Draw > Arc drop-down > Tangent Arc

The **Tangent Arc** tool is similar to drawing the tangent and normal arcs using the **Line** tool. To draw a tangent arc, choose the **Tangent Arc** tool from the **Arc** drop-down, refer to Figure 2-21. On doing so, you will be prompted to specify the start point of the arc. Move the cursor close to the endpoint of the entity where you want to start the tangent arc. You will notice that the endpoint relationship handle is displayed to the right of the cursor. This handle has a

Evaluation Copy. Do not reproduce. For information visit www.cadcim.com

small inclined line with a point at the upper end, which suggests that if you select the point now, the endpoint of the entity will be snapped. Select the endpoint and then move the cursor; the intent zones will be displayed. Move the cursor through a small distance in the required intent zone and then specify the endpoint of the arc. Alternatively, you can enter the radius and the included angle of the arc in the **Tangent Arc** Command bar, which is displayed when you invoke this tool.

Arc by 3 Points Tool

Ribbon: Home > Draw > Arc drop-down > Arc by 3 Points

This tool is used to draw an arc by specifying its start point, endpoint, and the third point on its periphery. The third point is used to specify the direction in which the arc will be drawn. You can specify the radius of this arc in the Command bar. Figure 2-22 shows a three-points arc drawn by this method.

Arc by Center Point Tool

Ribbon: Home > Draw > Arc drop-down > Arc by Center Point

This tool is used to draw an arc by specifying its center point, start point, and endpoint. Invoke the **Arc by Center Point** tool; you will be prompted to specify the center point of the arc. Specify the center point of the arc; you will be prompted to specify its start point and then the endpoint. Note that when you specify the start point of the arc, the radius will be automatically defined. And on specifying the endpoint of the arc, the length of the arc will be defined. Figure 2-23 shows an arc drawn by using this method.

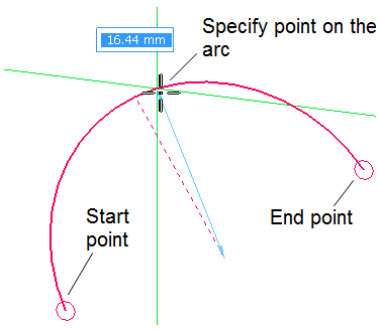

Figure 2-22 *An arc drawn by specifying 3 points*

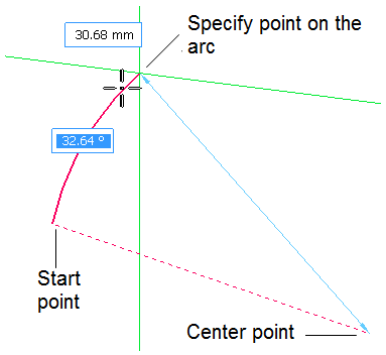

Figure 2-23 *An arc drawn by specifying center point*

Drawing Rectangles

In Solid Edge, you can draw rectangles using three methods that are discussed next.

Rectangle by Center Tool

Ribbon: Home > Draw > Rectangle drop-down > Rectangle by Center

In Solid Edge, you can draw a rectangle by specifying its center point and any of its vertices. To draw a rectangle by using this tool, choose the **Rectangle by Center** tool from the

Evaluation Copy. Do not reproduce. For information visit www.cadcim.com

Rectangle drop-down, refer to Figure 2-24; you will be prompted to specify the center point of the rectangle.

Click in the drawing window to specify the center point of the rectangle and move the cursor; a dynamic preview of the rectangle will be displayed in the drawing window, as shown in Figure 2-25 and you will be prompted to specify a point to create a rectangle. Specify a point; the point specified will define the height and width of the rectangle. Alternatively, you can specify the width, height, and angle of the rectangle in the Command bar.

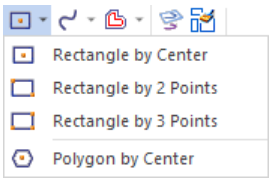

Figure 2-24 *The* ***Rectangle*** *drop-down*

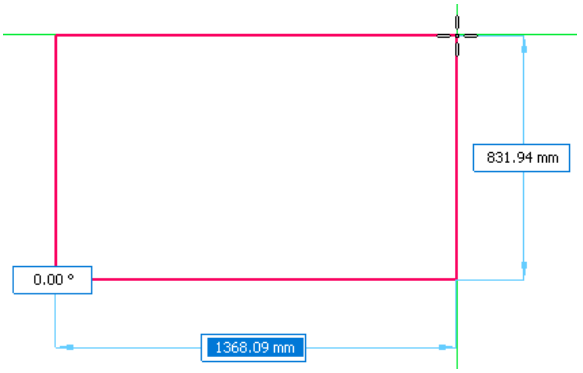

Figure 2-25 *Dynamic preview of the rectangle displayed after specifying its center*

Tip

You can also draw a rectangle by pressing and holding the left mouse button at a point and dragging the cursor across to define the opposite corner of the rectangle. When you release the left mouse button, the rectangle will be drawn.

Rectangle by 2 Points Tool

Ribbon: Home > Draw > Rectangle drop-down > Rectangle by 2 Points

You can also draw a rectangle by specifying two diagonally opposite corners. To draw a rectangle by using this method, choose the **Rectangle by 2 Points** tool; you will be prompted to specify the first corner of the rectangle. Click in the drawing window to specify the first corner of the rectangle; a dynamic preview of the rectangle will be displayed in the drawing window, as shown in Figure 2-26, and you will be prompted to click in the drawing window to specify the second corner. Click in the drawing window or specify the values width and height values in the **Rectangle by 2 Points** Command bar to specify the diagonally opposite corner; a rectangle will be created.

Rectangle by 3 Points Tool

Ribbon: Home > Draw > Rectangle drop-down > Rectangle by 3 Points

You can also draw rectangles by specifying three points. The first two points define the width and orientation of the rectangle and the third point defines its height. To draw a rectangle by specifying three points, invoke the **Rectangle by 3 Points** tool; you will be prompted

Evaluation Copy. Do not reproduce. For information visit www.cadcim.com

to specify the first corner. Specify a point in the drawing window to define the start point of the rectangle; you will be prompted to specify the second point. This point will define the width of the rectangle. You can also define this point at an angle. On doing so, the rectangle will be drawn at an angle. After specifying the width of the rectangle, you will be prompted to specify a point that will define the height of the rectangle. Specify the point; the rectangle will be created. Alternatively, you can specify the width, height, and angle of the rectangle in the **Rectangle by 3 points** Command bar. Figure 2-27 shows a rectangle drawn at an angle.

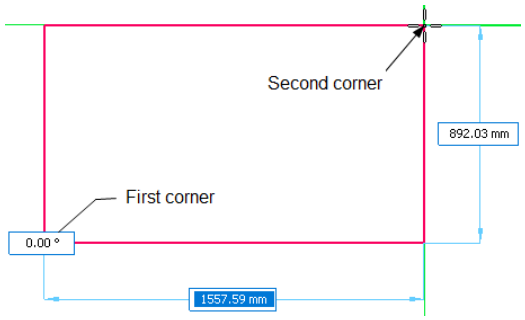

Figure 2-26 *Drawing a rectangle by specifying two diagonally opposite corners*

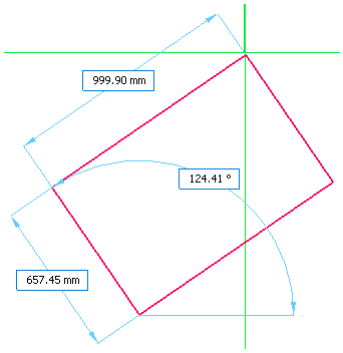

Figure 2-27 *Rectangle drawn at an angle by using the* ***Rectangle by 3 points***

Drawing Polygons

Ribbon: Home > Draw > Rectangle drop-down > Polygon by Center

The polygons drawn in Solid Edge are regular polygons. A regular polygon is a geometric figure with many sides, and in it the length of all sides and the angle between them are the same. In Solid Edge, you can draw a polygon with the number of sides ranging from 3 to 200. To create a polygon, choose the **Polygon by Center** tool from the **Rectangle** drop-down of the **Draw** group; you will be prompted to specify the center point of the polygon. Click in the drawing window to specify the center point of the polygon; you will be prompted to specify the point to create the polygon. Click in the drawing window to specify the point of the polygon; the polygon will be created. You will notice that an imaginary circle is drawn such that all its vertices touch the circle. This imaginary circle will be used as the construction geometry for creating the polygon.

Note that if the **By Midpoint** button is chosen in the **Polygon by Center** Command bar, you can specify the midpoint of an edge of the polygon, as shown in Figure 2-28. If you choose the **By Vertex** button from the **Polygon by Center** Command bar, you can specify the vertex of the polygon, as shown in Figure 2-29.

Evaluation Copy. Do not reproduce. For information visit www.cadcim.com

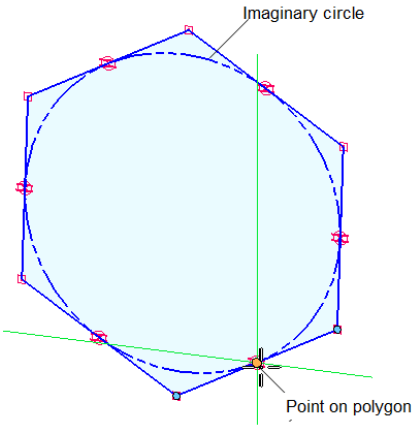

Figure 2-28 *Drawing a polygon by using the* ***By Midpoint*** *button*

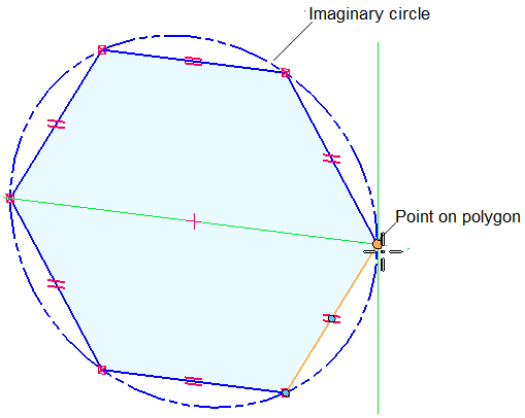

Figure 2-29 *Drawing a polygon by using the* ***By Vertex*** *button*

Next, in the **Polygon by Center** Command bar, specify the number of sides of the polygon in the **Sides** spinner. In the **Distance** edit box, specify the distance between the two specified points of the polygon. In the **Angle** edit box, specify the orientation of the polygon with respect to the horizontal axis.

Drawing Curves

Ribbon: Home > Draw > Curve

To draw the curve, choose the **Curve** tool from the **Draw** group of the **Home** tab; the **Curve** Command bar will be displayed**.** The **Curve** tool allows you to draw curves by using two methods: by specifying points in the drawing window, and by dragging the cursor in the drawing window. These methods are discussed next.

Drawing a Curve by Specifying Points in the Drawing Window

In this method, you need to continuously specify points in the drawing area to draw a curve passing through them. After specifying the first point, move the cursor and specify the second point. Continue specifying points until you have specified all the points required for drawing the curve. Figure 2-30 shows a curve drawn by using this method.

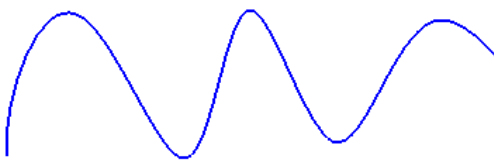

Figure 2-30 *Curve drawn by specifying points in the drawing window*

You can also create a closed curve by using the **Curve** tool. To do so, invoke the **Curve** tool from the **Draw** group and then choose the **Close Curve** button from the **Curve** Command bar. Next, specify the first point to start the curve; a rubber line will get attached to the cursor. Specify

Evaluation Copy. Do not reproduce. For information visit www.cadcim.com

the end point and move the cursor in the drawing area and click for the third point to create the closed curve.

Clean Sketch Tool

Ribbon: Home > Draw > Clean Sketch

The **Clean Sketch** tool is used to remove unnecessary or overlapping elements from the imported sketch. To remove the overlapping entities, choose the **Clean Sketch** tool from the **Draw** group in the **Home** tab; the **Clean Sketch** Command bar will be displayed, refer to Figure 2-31. Now, choose the **Clean Sketch - Clean Sketch Options** button from this Command bar; the **Clean Sketch Options** dialog box will be displayed, refer to Figure 2-32. The options in this dialog box are discussed next.



Figure 2-31 *The* ***Clean Sketch*** *Command bar*

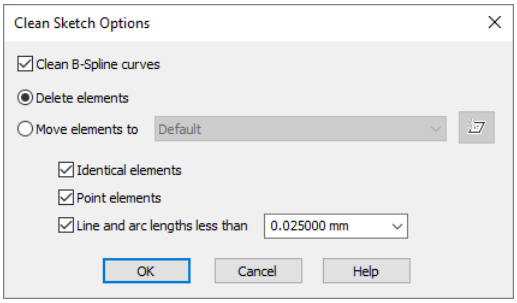

Figure 2-32 *The* ***Clean Sketch Options*** *dialog box*

Clean B-Spline curves

The **Clean B-Spline curves** check box in the **Clean Sketch Options** dialog box is selected to delete the B-spline curves from the sketch, refer to Figure 2-32.

Delete elements

The **Delete elements** radio button in the dialog box is selected to delete the duplicate entities.

Move elements to

The **Move elements to** radio button is selected to move the duplicate entities to a separate layer. To move the duplicate entities, select this radio button from the **Clean Sketch Options** dialog box; the **Move elements to** drop-down list and the New Layer button on its right will be activated. Next, choose the New Layer button to create a new layer; the **New Layer** dialog box will be displayed, refer to Figure 2-33. Enter the required layer name in the **New Layer name** edit box and choose the **OK** button, a new layer will be created and displayed in the **Move elements to** drop-down list. Now, you can select the required layer from this drop-down list.

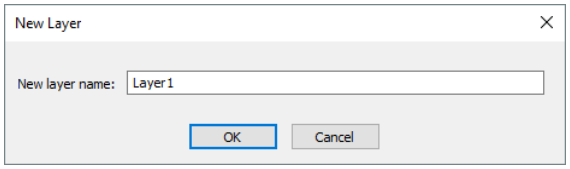

Figure 2-33 *The* ***New Layer*** *dialog box*

Evaluation Copy. Do not reproduce. For information visit www.cadcim.com

Identical elements

The **Identical elements** check box is selected to remove the identical entities in the sketch.

Point elements

The **Point elements** check box is selected to remove the point entities in the sketch.

Line and arc lengths less than

The **Line and arc lengths less than** check box is selected to remove the line and arc entities of a value lesser than the user defined value from the sketch.



Note

You cannot move or delete the sketched entities using this command on which any relationship is applied.

Creating Construction Geometries

Ribbon: Home > Draw > Create as Construction



You can sketch entities such as lines, arcs, circles, and ellipses as construction geometries by using the **Create as Construction** button. When this button is turned on, all the entities will be created as construction geometry.

Converting Sketched Entities into Construction Geometries

Ribbon: Home > Draw > Construction



This button is used to toggle between sketched entities and construction geometries. Choose the **Construction** button from the **Draw** group of the **Home** tab; the **Construction** Command bar will be displayed and you will be prompted to select or fence the elements to toggle between sketch or construction. Next, select the sketched elements to convert them into construction geometry.

Converting Sketched Entities into Curves

Ribbon: Sketching > Draw > Convert to Curve



In Solid Edge, you can convert the sketched entities such as lines, arcs, circles, and ellipses into bezier spline curves by using the **Convert to Curve** tool. On invoking this tool, you will be prompted to select an element to be converted into a curve. As soon as you select the element, it will be converted into a bezier spline curve. Note that you may not be able to view the changes in the sketched entity unless you select it. When you select the sketched entity, you will notice that the number of handles in it has increased and the control polygon is displayed on that entity. If you drag the converted entity using any of its handles, it will become a curve.

Filleting Sketched Entities

Ribbon: Home > Draw > Fillet drop-down > Fillet



Filleting is a process of rounding sharp corners of a profile. You can create a fillet by removing sharp corners and then replacing them with round corners. In Solid Edge, you

Evaluation Copy. Do not reproduce. For information visit www.cadcim.com

can create a fillet between any two sketched entities. To create a fillet, choose the **Fillet** tool from the **Fillet** drop-down in the **Draw** group, refer to Figure 2-34; the **Fillet** Command bar will be displayed. Enter the radius of the fillet in the **Radius** edit box of the Command bar and press ENTER. Next, select the two entities that you want to fillet; the fillet will be created. You can also directly select the sharp corners to be filleted. The two entities comprising the corner will be highlighted in orange when you move the cursor over the corner. Select the corners at this stage to create the fillet. Figure 2-35 shows a profile before and after filleting the corner.

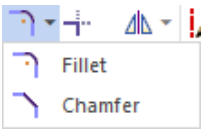

Figure 2-34 *The* ***Fillet*** *drop-down*

You can retain the sharp corner even after creating the fillet. To do so, choose the **No Trim** button from the **Fillet** Command bar and then select the corner to be filleted; the fillet will be created and the sharp corner will be retained. Figure 2-36 shows a profile in which the fillet is created with the sharp corner retained.

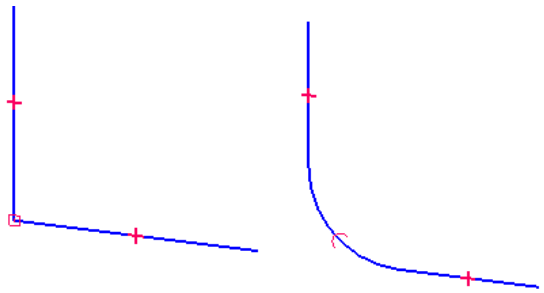

Figure 2-35 *Sketch before and after creating the fillet*

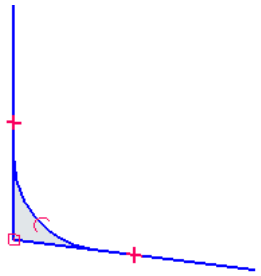

Figure 2-36 *Sharp corner retained after creating the fillet*

Note

Ideally, the profiles that have the fillet created with sharp corners retained may not give the desired result when used for creating features. Therefore, they should be avoided.

Chamfering Sketched Entities

Ribbon: Home > Draw > Fillet drop-down > Chamfer

Chamfering is a process of beveling the sharp corners of a profile to reduce the stress concentration. You can create a chamfer only between two linear entities. A chamfer can be created by defining the distance of the corner being chamfered from the two edges of the profile, or by defining the angle of the chamfer and the distance along one of the edges. To create a chamfer, invoke the **Chamfer** tool; the **Chamfer** Command bar will be displayed. In this Command bar, the **Angle**, **Setback A**, and **Setback B** edit boxes are available. The **Setback A** and **Setback B** values define the chamfer distance along the first and second edges, respectively. The **Angle** edit box defines the inclination angle of the chamfer. Note that you can specify any two of the three values. The third value is automatically updated on the basis of the two values that you defined.

After setting any two values in the **Chamfer** Command bar, select the first line and the second line to be chamfered; preview of the resulting chamfer will be displayed. Next, click to create the

Evaluation Copy. Do not reproduce. For information visit www.cadcim.com

chamfer. Note that the first line is taken as the setback A element and the second line is taken as the setback B element, by default. If you want to reverse the order, move the cursor over the first line. You will notice that now the second line is taken as the setback A element, and the first line is taken as the setback B element. Consequently, the preview will also change. By default, the setbacks A and B are displayed in orange. Figure 2-37 shows the preview of the chamfer.

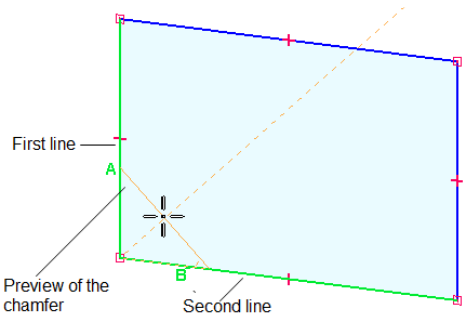

Figure 2-37 *Preview of the chamfer*

THE DRAWING DISPLAY TOOLS

The drawing display tools are an integral part of any solid modeling tool. They enable you to zoom, fit, and pan the drawing so that you can view it clearly. The drawing display tools available in Solid Edge are discussed next.

Zoom Area Tool

Ribbon:	View > Orient > Zoom Area
Status Bar:	Zoom Area

The **Zoom Area** tool allows you to zoom into a particular area by defining a box around it. You can invoke this tool from the **Orient** group in the **View** tab or directly from the Status bar. On invoking this tool, a plus sign (+) of infinite length will be attached to the tip of the cursor and you will be prompted to click to define the first corner or drag to specify the box. Specify a point on the screen to define the first corner of the zoom area. Next, move the cursor and specify another point to define the opposite corner of the zoom area. The area defined inside the box will be zoomed and displayed on the screen.

Zoom Tool

Ribbon:	View > Orient > Zoom
Status Bar:	Zoom

The **Zoom** tool enables you to dynamically zoom in or out the drawing. You can also use this tool to increase the display area to double the current size. To zoom into the drawing, press and hold the left mouse button in the center of the screen and then drag the cursor down. To zoom out the drawing, press and hold the left mouse button in the center of the screen and drag the cursor up.

To increase the drawing display area upto double of the current size, invoke this tool and click anywhere in the drawing window. On doing so, the drawing display area will increase such that

Evaluation Copy. Do not reproduce. For information visit www.cadcim.com

the point at which you clicked will be moved to the center of the screen. Alternatively, you can zoom in and zoom out of the drawing area by scrolling the mouse.

Fit Tool

Ribbon: View > Orient > Fit
Status Bar: Fit



The **Fit** tool enables you to modify the drawing display area such that all entities in the drawing fit in the current display. Alternatively, you can press the middle mouse button twice to fit the drawing in the current display.

Pan Tool

Ribbon: View > Orient > Pan
Status Bar: Pan



The **Pan** tool allows you to dynamically pan the drawing in the drawing window. When you invoke this tool, the arrow cursor will be replaced by a hand cursor and you will be prompted to click to select the origin or drag the cursor for the dynamic pan. Press and hold the left mouse button in the drawing window, and then drag the cursor to pan the drawing. You can also pan the drawing by specifying two points in the drawing window. First, specify a point anywhere in the drawing window and then move the cursor. You will notice that a rubber-band line is displayed. One end of this line will be fixed at the point you specified and the other end will be attached to the hand cursor. Move the cursor and specify another point in the drawing window to pan the drawing. Alternatively, you can press the SHIFT key and drag the mouse by pressing the middle mouse button for panning.

Sketch View Tool

Ribbon: View > Views > Sketch View
Status Bar: Sketch View



Sometimes while using the drawing display tools, the orientation of the sketching plane may change. The **Sketch View** tool enables you to restore the original orientation that was active when you invoked the sketching environment. Note that this tool is available only in the sketching environment.



Tip

You can also use the keyboard to modify the drawing display area. To do so, the following combination of keys can be used:

CTRL+ Bottom/Right arrow key = Zoom out
CTRL+ Up/Left arrow key = Zoom in
CTRL + SHIFT+ arrow key = Pan
SHIFT+ Top/Right arrow key = Rotate clockwise
SHIFT+ Bottom/Left arrow key = Rotate counter clockwise

Evaluation Copy. Do not reproduce. For information visit www.cadcim.com

SELECTING SKETCHED ENTITIES

You can select the sketched entities available in the drawing window by invoking the **Select** mode. To do so, choose the **Select** tool from the **Select** group; the **Select** mode will be invoked. Next, click on the required entity to select it. Note that you can exit from any active tool by activating the **Select** mode or by pressing the ESC key. The other tools available in the **Select** group are discussed next.

Overlapping



This selection option ensures that all the entities that either lie partially inside the boundary or even touch the boundary are selected.

Selection Filter



This option is used to control whether the element type can be selected or not. A check mark is displayed adjacent to the element types that can be selected.

DELETING SKETCHED ENTITIES

To delete sketched entities, select them using any one of the object selection methods discussed above; the selected entities will turn green in color. Next, press the DELETE key; all the selected entities will be deleted.

GRID

In Solid Edge, you can display the grid while creating a sketch. Also, you can configure the grid settings using the grid tools available in the **Draw** group of the **Sketching** tab. These tools are discussed next.

Show Grid



This button is used to toggle the grid display on/off in the Solid Edge drawing area. To turn the grid display on, choose the **Show Grid** button from the **Draw** group in the **Sketching** tab. Figure 2-38 shows the rectangle drawn after turning the grid display on. Choose the **Show Grid** button again; the grid display turns off.

Evaluation Copy. Do not reproduce. For information visit www.cadcim.com

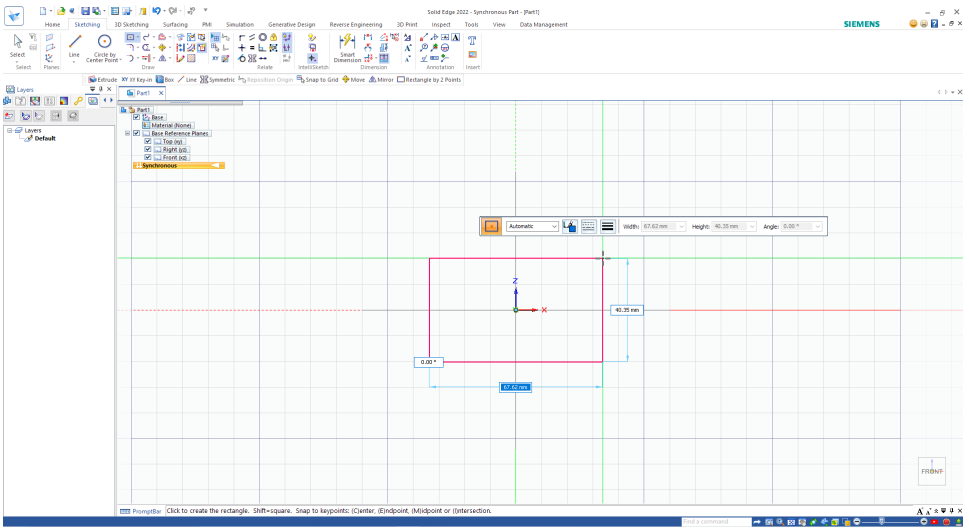

Figure 2-38 *Sketch created on choosing the* ***Show Grid*** *button*

Snap to Grid

When this button is chosen, the cursor will snap to grid points.

XY Key-in

This button is used to move the drawn entity up to the required length by specifying the values in the **X** and **Y** edit boxes. To specify the value, choose the **XY key-in** button from the **Sketching** tab; the **X** and **Y** edit boxes will be displayed, as shown in Figure 2-39.

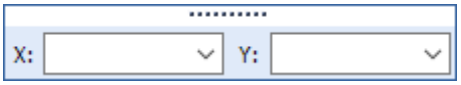

Figure 2-39 *X and Y edit boxes displayed*

Grid Options

You can also configure the grid settings by using the **Grid Options** dialog box. To invoke this dialog box, choose **Sketching > Draw > Grid Options** from the **Ribbon**. Figure 2-40 shows the **Grid Options** dialog box. The options in this dialog box are used to control the grid settings.

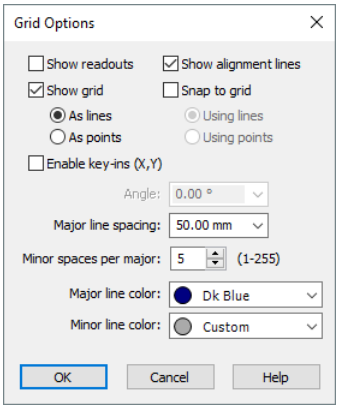

Figure 2-40 *The* ***Grid Options*** *dialog box*

REPOSITION ORIGIN

Using this tool, you can change the position of the origin point. Note that this tool will be available only when the sketching plane is locked. On choosing this tool, the steering wheel will be displayed, as shown in Figure 2-41. You can use the steering wheel to change the location of the origin point. To

Evaluation Copy. Do not reproduce. For information visit www.cadcim.com

change the location of the origin point, select the origin knob of the steering wheel and move the cursor to the required location, refer to Figure 2-42. You can select a part edge, a keypoint, a grid point, or another type of point to define the new location of the origin.

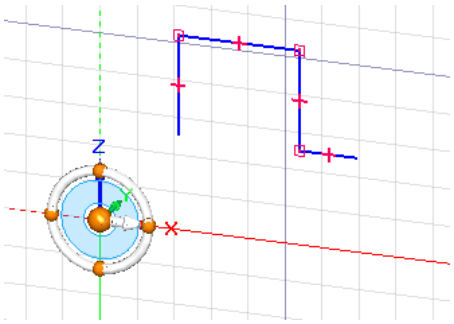

Figure 2-41 *Steering wheel displayed in the drawing area*

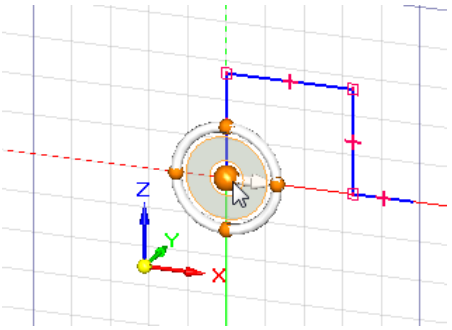

Figure 2-42 *Specifying the new location of the origin*

ZERO ORIGIN

On choosing this tool, the origin point is reset to the default location.

TUTORIALS

Tutorial 1 — Synchronous

In this tutorial, you will draw the profile of the model shown in Figure 2-43. The profile to be drawn is shown in Figure 2-44. Do not dimension the profile as dimensions are given for reference only. **(Expected time: 30 min)**

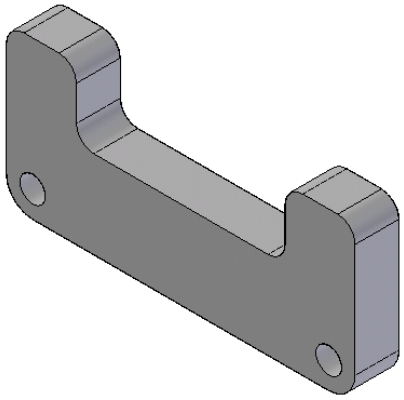

Figure 2-43 *Model for Tutorial 1*

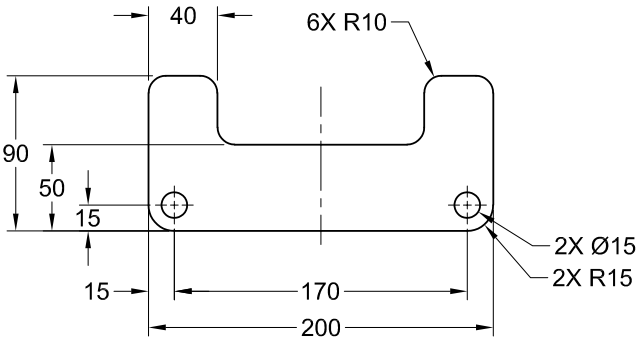

Figure 2-44 *Profile for Tutorial 1*

Evaluation Copy. Do not reproduce. For information visit www.cadcim.com

The following steps are required to complete this tutorial:

a. Start Solid Edge 2022 and then start a new file in the **Synchronous Part** environment.
b. Draw the outer loop of the profile using the **Line** tool.
c. Fillet the sharp corners of the outer loop by using the **Fillet** tool.
d. Draw circles using the centers of fillets to complete the profile.
e. Save the file and close it.

Starting a Solid Edge Document

You will create profile of the model using the tools in the **Home** tab of the **Synchronous Part** environment of Solid Edge. To create this profile, first you need to start a new part file.

1. Double-click on the shortcut icon of Solid Edge 2022 on the desktop of your computer.

   Now, you need to start a new part file to draw the sketch of the given model.

2. Choose the **New** tool from the **Quick Access** toolbar of the home screen; the **New** dialog box is displayed. Next, select **iso metric part.par** and choose the **OK** button to start a new Solid Edge part file.

Creating the Outer Loop of the Profile

You need to draw the outer loop of the profile by using the **Line** tool. The sharp corners of the outer loop will be rounded by using the **Fillet** tool. In this tutorial, you will use the dynamic edit box displayed in the drawing area to enter exact dimension of the sketched entities.

1. Choose the **Line** tool from the **Draw** group of the **Home** tab; the **Line** Command bar is displayed and the alignment lines are attached to the cursor.

   Next, you need to define the plane on which you want to draw the profile of the base feature.

2. Hover the cursor on the base coordinate system until a mouse symbol is displayed, and then right-click; the **QuickPick** list box is displayed with the possible nearest selection. Next, choose the XZ plane for sketching.

   By default, the view orientation of the part document is set to Dimetric.

3. Choose the **Sketch View** tool from the **Views** group of the **View** tab; the sketching plane orients parallel to the screen.

4. Move the cursor toward the origin and click when an endpoint snap is displayed at the origin; the start point of the line is specified.

   The point specified by you is selected as the start point of the line and an endpoint of the line is attached to the cursor. As you move the cursor on the screen, the line stretches and its length and angle values get dynamically modified in the Command bar.

Evaluation Copy. Do not reproduce. For information visit www.cadcim.com

Next, you need to specify the end point to define the first line and the other remaining lines by using the **Length** and **Angle** dynamic edit boxes.

5. Enter **200** in the **Length** dynamic edit box and press ENTER. Next, enter **0** in the **Angle** dynamic edit box and press ENTER.

6. Choose the **Fit** tool from the Status bar; the current drawing display area is modified and the complete line is displayed in the current view. Also, the **Line** tool still remains active, and you are prompted to specify the second point of the line.

7. Enter **90** in the **Length** dynamic edit box and press ENTER. Next, enter **90** in the **Angle** dynamic edit box and press ENTER; a vertical line of length 90 mm is drawn. You can use the **Fit** tool to modify the current drawing display area as discussed earlier.

8. Enter **40** in the **Length** dynamic edit box and press ENTER. Enter **180** in the **Angle** dynamic edit box and press ENTER; a horizontal line of 40 mm is drawn toward the left of the last line.

9. Enter **40** in the **Length** dynamic edit box and press ENTER. Enter **-90** in the **Angle** dynamic edit box and press ENTER; a vertical line of 40 mm is drawn downward.

10. Enter **120** in the **Length** dynamic edit box and press ENTER. Enter **-180** in the **Angle** dynamic edit box and press ENTER; a horizontal line of 120 mm length is drawn.

11. Move the cursor vertically upward; a rubber-band line is displayed with its start point at the endpoint of the previous line and the endpoint attached to the cursor. When the line becomes vertical, the vertical relationship handle is displayed.

12. Move the cursor vertically upward until the horizontal alignment indicator (dotted line) is displayed at the top endpoint of the vertical line of 40 mm length. If the horizontal alignment indicator is not displayed, move the cursor once at the top end-point of the vertical line and then move it back to its original position. Note that at this point, the value in the **Length** dynamic edit box is **40** and the value in the **Angle** dynamic edit box is **90**. Next, click on the dotted line to specify the endpoint of this line.

13. Move the cursor horizontally toward the left above the vertical plane and then make sure that the horizontal relationship handle is displayed. Next, move the cursor once on the vertical plane and then vertically upward. Click when the intersection relationship handle is displayed.

14. Move the cursor vertically downward toward the origin. If the first line is not highlighted in orange, move the cursor once over it and then move it back to the origin. The endpoint relationship handle is displayed. This relationship ensures that this line ends at the start point of the first line.

15. Click to specify the endpoint of the line when the endpoint relationship handle is displayed. Choose the **Fit** button to fit the sketch into the drawing window.

Evaluation Copy. Do not reproduce. For information visit www.cadcim.com

16. Choose the **Select** tool from the **Select** group of the **Home** tab to exit the **Line** tool. On doing so, the profile gets shaded indicating that it is a closed region. The sketch after drawing the lines is shown in Figure 2-45.

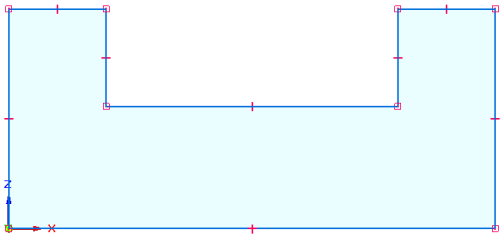

Figure 2-45 *Sketch after drawing the lines*

Filleting Sharp Corners

Next, you need to fillet the sharp corners so that the sharp edges are not there in the final model. You can fillet corners by using the **Fillet** tool.

1. Invoke the **Fillet** tool from the **Draw** group; the **Fillet** Command bar is displayed. To fillet a sharp corner, you first need to specify the fillet radius. You can fillet the lower left and lower right corners first and then the remaining corners. This is because the fillet radii of both the bottom left and the bottom right corners are equal. Also, the fillet radii of the remaining corners are equal.

2. Enter **15** in the **Radius** edit box in the **Fillet** Command bar and press ENTER. Next, move the cursor over the lower left corner of the sketch; the two lines forming a corner are highlighted in orange.

3. Click to select this corner; a fillet is created at the lower left corner of the sketch.

4. Similarly, move the cursor over the lower right corner and click to select it when the two lines forming this corner are highlighted in orange.

   Next, you need to modify the fillet radius value and fillet the remaining corners.

5. Enter **10** in the **Radius** edit box in the Command bar and press ENTER.

6. Select the remaining corners of the sketch one by one and then fillet them with a radius of 10. The sketch after creating fillets is shown in Figure 2-46. Next, exit the tool by choosing the **Select** tool from the **Select** group of the **Home** tab.

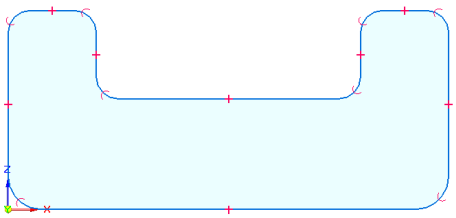

Figure 2-46 *Sketch after creating fillets*

Evaluation Copy. Do not reproduce. For information visit www.cadcim.com

Drawing Circles

Finally, you need to draw circles by using the **Circle by Center Point** tool to complete the profile. You will use the center points of fillets as the center points of the circles.

1. Choose the **Circle by Center Point** tool from the **Draw** group of the **Home** tab; the **Circle by Center Point** Command bar is displayed and you are prompted to select the center point of the circle.

2. Enter **15** in the **Diameter** edit box of the **Circle by Center Point** Command bar and press ENTER.

3. Move the cursor over the fillet at the lower left corner; the fillet is highlighted in orange and the center point of the fillet arc is displayed. The center point is represented by a plus sign (+).

4. Move the cursor over the center point of the fillet represented by a plus sign (+); the fillet is highlighted in orange color and the concentric relationship handle is displayed on the right of the cursor.

5. Click to specify this point as the center point of the circle; a circle is drawn at this point and you are prompted again to specify the center point of the circle. Also, a circle of the specified diameter is attached to the cursor.

6. Move the cursor over the lower right fillet arc so that its center point is also displayed.

7. Move the cursor over the center point of the lower right fillet and click when the concentric relationship handle is displayed. The final profile for Tutorial 1 is shown in Figure 2-47.

8. Press the ESC key to exit the tool.

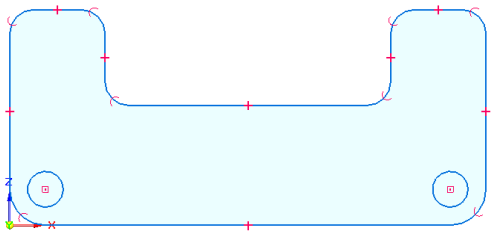

Figure 2-47 *Final profile for Tutorial 1*

Saving the File

1. Choose the **Save** tool from the **Quick Access** toolbar; the **Save As** dialog box is displayed.

   It is recommended that you create a separate folder for every chapter in the textbook.

2. Browse to the *C* drive and then create a folder with the name *Solid Edge* in it. In the *Solid Edge* folder, create a folder with the name *c02*.

Evaluation Copy. Do not reproduce. For information visit www.cadcim.com

3. Make the *c02* folder and save the file with the name *c02tut1.par*.

4. Choose the **Close** button from the file tab bar to close the file.

Tutorial 2 Synchronous

In this tutorial, you will draw the profile of the model shown in Figure 2-48. The profile to be drawn is shown in Figure 2-49. Do not dimension the profile as dimensions are for reference only. **(Expected Time: 30 min)**

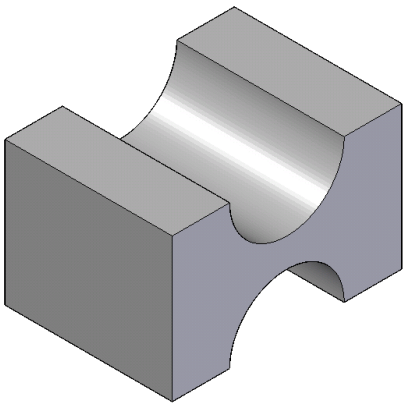

Figure 2-48 *Model for Tutorial 2*

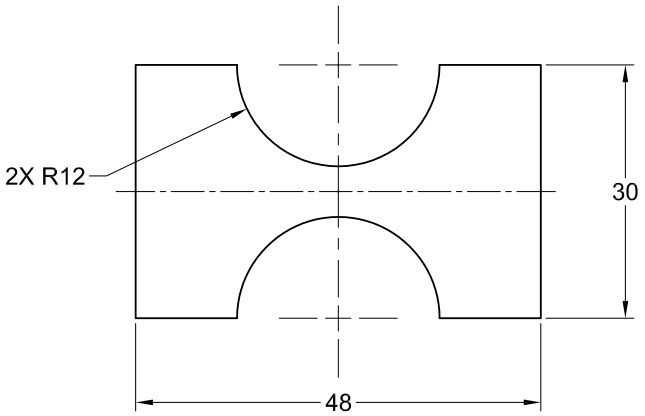

Figure 2-49 *Profile for Tutorial 2*

The following steps are required to complete this tutorial:

a. Start a new part file.
b. Draw the profile of the model by using the **Line** tool.
c. Save the file and close it.

Starting a New Part File and Selecting the Sketching Plane

You can start a new part file by choosing the **New** tool from the **Quick Access** toolbar which will be available on the screen after you close all the files.

1. Choose the **New** tool from the **Quick Access** toolbar; the **New** dialog box is displayed.

2. In this dialog box, select the **iso metric part.par** template. Next, choose the **OK** button to start a new part file.

Drawing the Profile

You need to draw the profile by using the **Line** and **Arc** tools.

1. Choose the **Line** tool from the **Draw** group of the **Home** tab; the **Line** Command bar is displayed and the alignment lines are attached to the cursor.

   Next, you need to define the plane on which you want to draw the profile of the base feature.

Evaluation Copy. Do not reproduce. For information visit www.cadcim.com

2. Hover the cursor on the base coordinate system until a mouse symbol is displayed and then right-click; the **Quick Pick** list box is displayed with the nearest possible selections. Next, choose the YZ plane for sketching.

   Alternatively, you can select the YZ plane from the PathFinder. To do so, click on the plus sign (+) located on the left of the **Base Reference Planes** in the PathFinder to expand it. Next, select the YZ plane from it.

   By default, the view orientation of the part document is set to Dimetric.

3. Choose the **Sketch View** tool from the status bar; the sketching plane is oriented parallel to the screen.

4. Click when an endpoint snap is displayed at the origin to specify the start point of the line.

   The point specified is selected as the start point of the line and the endpoint is attached to the cursor. When you move the cursor on the screen, the line stretches and its length and angle values vary dynamically in the Command bar.

5. Enter **12** in the **Length** dynamic edit box and press ENTER. Next, enter **0** in the **Angle** dynamic edit box and press ENTER.

   The first line is drawn and another rubber-band line with the start point at the endpoint of the previous line and the endpoint attached to the cursor is displayed. But as the next entity is an arc, you need to invoke the arc mode.

6. Press the A key to invoke the arc mode. On doing so, a rubber-band arc with the start point fixed at the endpoint of the last line and the endpoint attached to the cursor is displayed. Also, the intent zones are displayed at the start point of the arc.

7. Move the cursor to the start point of the arc and then move it vertically upward through a small distance. Next, move the cursor toward right. You will notice that a normal arc starts from the endpoint of the last line.

8. Enter **12** and **180** in the **Radius** and **Sweep** dynamic edit boxes respectively; preview of the resulting arc is displayed.

   To draw the arc, you need to specify a point on the screen for defining the direction of the arc.

9. Move the cursor horizontally toward the right and then click; the arc is drawn and the line mode is invoked again. Zoom out the drawing area.

10. Enter **12** and **0** in the **Length** and **Angle** dynamic edit boxes, respectively, and then press ENTER.

Evaluation Copy. Do not reproduce. For information visit www.cadcim.com

11. Enter **30** and **90** in the **Length** and **Angle** dynamic edit boxes, respectively, and then press ENTER.

12. Move the cursor horizontally toward the left. Make sure the horizontal relationship handle is displayed. Click to specify the endpoint of the line when the vertical alignment indicator is displayed at the endpoint of the arc. If the alignment indicator is not displayed, move the cursor once on the endpoint of the arc and then move it back.

    Next, you need to draw an arc. To do so, you need to invoke the arc mode.

13. Press the A key to invoke the arc mode; a rubber-band arc is displayed with its start point fixed at the endpoint of the last line.

14. Move the cursor to the start point of the arc and then move it vertically downward through a small distance. When the normal arc appears, move the cursor toward the left.

15. Move the cursor once over the lower arc and then move it toward left in line with the upper right horizontal line from where this arc starts. On doing so, a horizontal dotted line originating from the upper right horizontal line is displayed. At the point where the cursor is vertically in line with the start point of the lower arc, a vertical dotted line appears from the start point of the lower arc, as shown in Figure 2-50.

16. Click to define the endpoint of the arc at the intersection of the horizontal and vertical alignment dotted lines displayed; the arc is drawn and the line mode is invoked again.

17. Move the cursor horizontally toward the left and click to define the endpoint of the line when the vertical reference plane is highlighted in orange.

18. Move the cursor to the start point of the first line; the endpoint relationship handle is displayed and the first line is highlighted in orange.

19. Click to define the endpoint of this line when the endpoint relationship handle is displayed. The final profile of the model is shown in Figure 2-51.

20. Press the ESC key to exit the current tool.

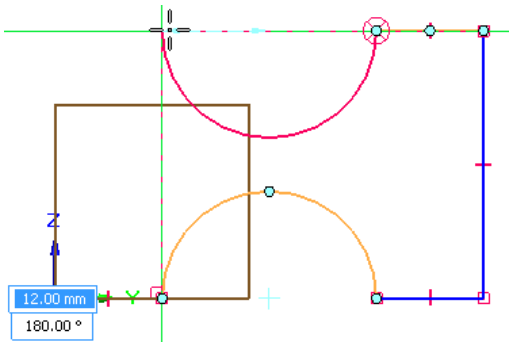

Figure 2-50 *Horizontal and vertical dotted lines displayed to define the endpoint of the arc*

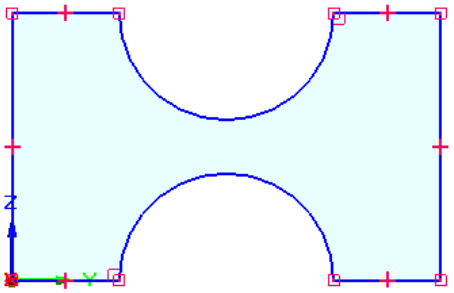

Figure 2-51 *Final profile for Tutorial 2*

Evaluation Copy. Do not reproduce. For information visit www.cadcim.com

Saving the File

1. Choose the **Save** button from the **Quick Access** toolbar and save the file with name *c02tut2* at following location:
   C:\Solid Edge\c02

2. Choose the **Close** button from the file tab bar to close the file.

Tutorial 3 Ordered

In this tutorial, you will draw the profile of the base feature of the model shown in Figure 2-52. The profile to be drawn is shown in Figure 2-53. Do not dimensions the profile as they are for reference only. **(Expected time: 30 min)**

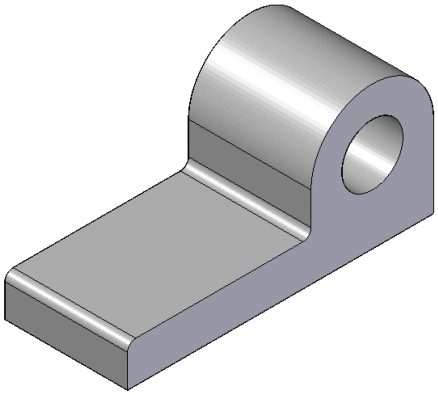

Figure 2-52 *Model for Tutorial 3*

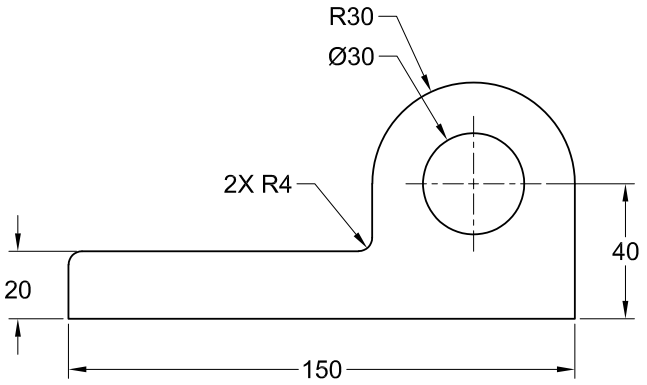

Figure 2-53 *Profile for Tutorial 3*

The following steps are required to complete this tutorial:

a. Start a new part file.
b. Switch to the ordered environment.
c. Invoke the sketching environment.
d. Draw the profile of the model by using the **Line** tool.
e. Fillet the two corners of the outer loop and then draw the inner circle.
f. Save the file and close it.

Starting a New Part File and Selecting the Sketching Plane

As mentioned earlier, you need to start a new part file by choosing the **New** button from the **Quick Access** toolbar.

1. Choose the **New** button from the **Quick Access** toolbar; the **New** dialog box is displayed.

2. In this dialog box, select the **iso metric part.par** template and then choose the **OK** button to start a new part file.

Evaluation Copy. Do not reproduce. For information visit www.cadcim.com

3. Select the **Ordered** radio button from the **Model** group of the **Tools** tab; the **Ordered Part** environment is invoked. Next, select the **Base Reference Planes** check box from the PathFinder to view the reference planes.

4. Choose the **Sketch** tool from the **Sketch** group of the **Home** tab; the **Sketch** command bar is displayed and you are prompted to select a planar face or a reference plane.



5. Next, move the cursor toward the YZ plane and select it when it is highlighted in orange color; the plane gets oriented parallel to the screen. Also, the **Line** tool is invoked automatically.

Drawing the Profile

As the **Line** tool is active, its Command bar is displayed in the drawing window and you are prompted to specify the start point of the line. You can start drawing the line from the origin.

1. Move the cursor close to the origin; one of the two axes is highlighted and the endpoint relationship handle is displayed.

2. Click when the endpoint relationship handle is displayed to specify the start point of the line.

   The point you specify is selected as the start point of the line and the endpoint is attached to the cursor.

3. Enter **150** in the **Length** dynamic edit box and press ENTER. Enter **0** in the **Angle** dynamic edit box and press ENTER; a line of 150 mm length is drawn.

   If this line is not completely visible on the screen, then to display the complete line, you need to modify the drawing display area by using the **Fit** tool.

4. Choose the **Fit** tool from the status bar; the line is completely visible in the current view.

5. Enter **40** and **90** in the **Length** and **Angle** dynamic edit boxes of the Command bar, respectively. Next press ENTER; a vertical line of 40 mm is drawn.

   Next, you need to draw a tangent arc from the end point of this line.

6. Press the A key to invoke the arc mode. Move the cursor back to the start point of the arc and then move it vertically upward through a small distance.

7. Move the cursor toward the left when the tangent arc is displayed. Enter **30** and **180** in the **Radius** and **Sweep** dynamic edit boxes, respectively. Next, press ENTER.

8. Specify a point in the drawing window to place the arc; the arc is drawn and the line mode is invoked again.

9. Enter **20** and **-90** in the **Length** and **Angle** dynamic edit boxes, respectively, and then press ENTER.

Evaluation Copy. Do not reproduce. For information visit www.cadcim.com

10. Move the cursor horizontally toward the left and make sure that the horizontal relationship handle is displayed. Click to define the endpoint of the line when the vertical plane is highlighted in orange color.

11. Move the cursor to the first line to highlight it and then move it to the start point of the first line; the first line is highlighted in orange color and the endpoint relationship handle is displayed.

12. Click to specify the endpoint of the line. The profile after drawing the outer loop is displayed in Figure 2-54. Next, press ESC to exit the tool.

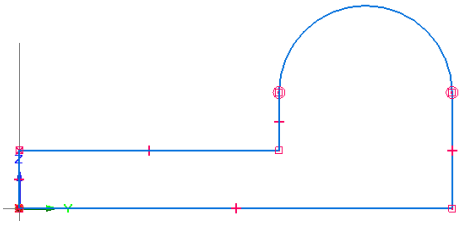

Figure 2-54 *Outer loop of the profile for Tutorial 3*

Filleting Sharp Corners

Next, you need to fillet sharp corners so that sharp edges are not there in the final model. You can fillet corners by using the **Fillet** tool.

1. Choose the **Fillet** tool from the **Draw** group of the **Home** tab; the **Fillet** Command bar is displayed.

2. Enter **4** in the **Radius** edit box of the **Fillet** Command bar and press ENTER. Now, move the cursor over the corner where the outer left vertical line and the upper horizontal line intersects; the two lines forming this corner are highlighted in orange.

3. Next, click to select this corner; a fillet is created at

4. Similarly, move the cursor over the corner where the upper horizontal line intersects the vertical line originating from the left endpoint of the arc. Now, click to select this corner; a fillet is created at this corner. Figure 2-55 shows the fillets created in the model.

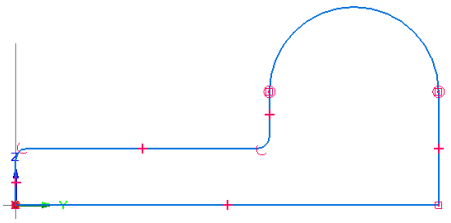

Figure 2-55 *Fillets created in the model*

Drawing the Circle

Next, you need to draw a circle to complete the profile. The circle will be drawn by using the **Circle by Center Point** tool.

1. Choose the **Circle by Center Point** tool from the **Draw** group of the **Home** tab; the **Circle by Center Point** Command bar is displayed.

2. Enter **30** in the **Diameter** edit box of the Command bar and press ENTER; a circle of 30 mm is attached to the cursor.

3. Move the cursor over the arc of radius 30 units; the arc is highlighted in orange color and its center point is displayed which is represented by a plus sign (+).

4. Move the cursor over the center point of the arc and click to define this point as the center

Evaluation Copy. Do not reproduce. For information visit www.cadcim.com

point of the circle when the concentric relationship handle is displayed. This completes the profile. The final profile for Tutorial 3 is shown in Figure 2-56.

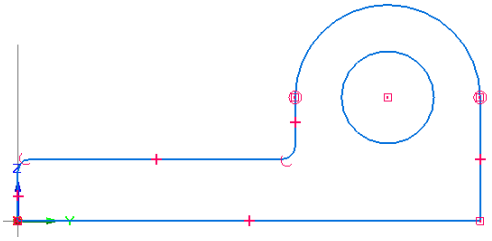

Figure 2-56 *Final profile for Tutorial 3*

5. Press the ESC key to exit the current tool.

6. Choose the **Close Sketch** tool from the **Close** group; the sketching environment is closed and the **Sketch** Command bar is displayed. Also, the current view is automatically changed to the dimetric view.



Saving the File

1. Choose the **Save** button from the **Quick Access** toolbar and save the file with name *c02tut3* at the following location:
   C:\Solid Edge\c02

2. Choose the **Close** button from the file tab bar to close the file.

Self-Evaluation Test

Answer the following questions and then compare them to those given at the end of this chapter:

1. You can restore the original orientation of the sketching plane by using the _____ tool in the status bar.

2. You can invoke the arc mode while the **Line** tool is already active by pressing the _____ key.

3. You can bevel corners in a sketch by using the _____ tool.

4. You can retain sharp corners even after filleting them by choosing the _____ button from the **Fillet** Command bar.

5. In Solid Edge, you can draw a polygon of sides ranging from 3 to _____.

6. The _____ tool is used to draw an arc by specifying its start point, endpoint, and the third point in the drawing area.

Evaluation Copy. Do not reproduce. For information visit www.cadcim.com

7. In the **Synchronous Part** environment, the reference planes are not displayed by default. (T/F)

8. When you open a new **ISO Metric Part** document, two triads are displayed in the drawing window. (T/F)

9. In the Synchronous modeling, you can create sketches as well as develop features in the same environment. (T/F)

10. You can use the Command bar to specify exact values of the sketched entities. (T/F)

Review Questions

Answer the following questions:

1. Which of the following options should be selected from the **New** dialog box to start a new part file?

   (a) **iso metric assembly.asm** (b) **iso metric draft.dft**
   (c) **iso metric part.par** (d) **iso metric sheet metal.psm**

2. Which of the following tools is used to round sharp corners in a sketch?

   (a) **Fillet** (b) **Chamfer**
   (c) **Round** (d) None of these

3. Which of the following edit boxes in the arc mode replaces the **Angle** edit box in the **Line** Command bar?

   (a) **Arc** (b) **Sweep**
   (c) **Value** (d) None of these

4. Which of the following tools is used to convert an existing sketched entity into a bezier spline curve?

   (a) **Convert to Sketch** (b) **Convert to Arc**
   (c) **Convert** (d) **Convert to Curve**

5. You can use the _____ key to lock or unlock a plane.

6. Invoke a sketching tool from the **Draw** group in the **Home** tab and then select a reference plane to invoke the sketching environment. (T/F)

7. The part file in Solid Edge is saved with a *.prt* extension. (T/F)

8. You can select entities by dragging a box around them. (T/F)

9. If **Overlapping** is the current selection mode then all entities that lie inside the box or even intersect the box will be selected. (T/F)

Evaluation Copy. Do not reproduce. For information visit www.cadcim.com

10. In Solid Edge, you can create fillets or chamfers by simply dragging the cursor across the entities that you want to fillet or chamfer. (T/F)

EXERCISES

Exercise 1

Draw profile of the base feature of the model shown in Figure 2-57. The profile to be drawn is shown in Figure 2-58. Do not dimension the profile as dimensions are given for reference only. **(Expected time: 30 min)**

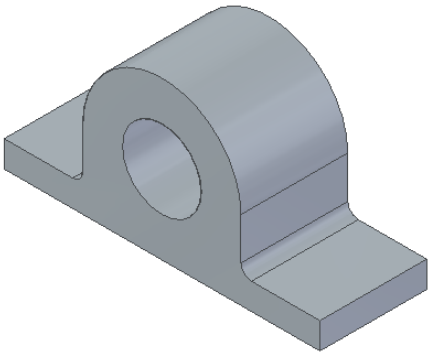

Figure 2-57 *Model for Exercise 1*

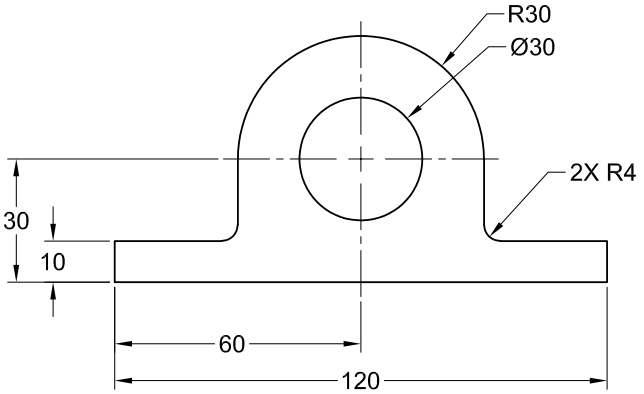

Figure 2-58 *Profile for Exercise 1*

Evaluation Copy. Do not reproduce. For information visit www.cadcim.com

Exercise 2

Draw the profile of the base feature of the model shown in Figure 2-59. The profile to be drawn is shown in Figure 2-60. Do not dimension the profile as dimensions are given for reference only. **(Expected time: 30 min)**

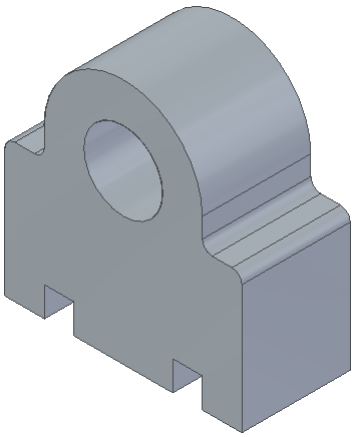

Figure 2-59 *Model for Exercise 2*

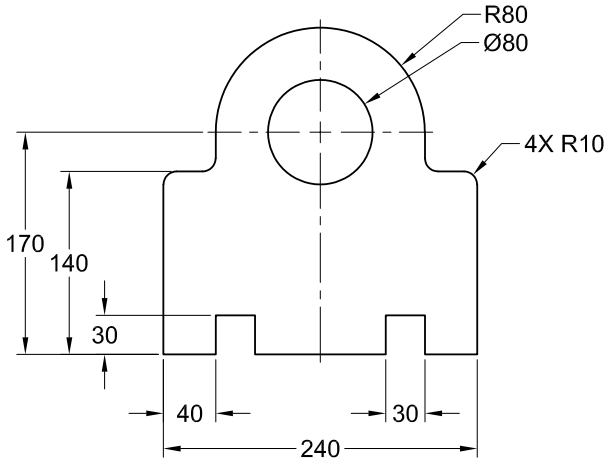

Figure 2-60 *Profile for Exercise 2*

Exercise 3

Draw the profile of the base feature of the model shown in Figure 2-61. The profile to be drawn is shown in Figure 2-62. Do not dimension the profile as dimensions are given for reference only. **(Expected time: 30 min)**

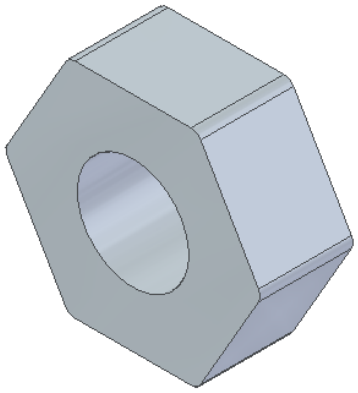

Figure 2-61 *Model for Exercise 3*

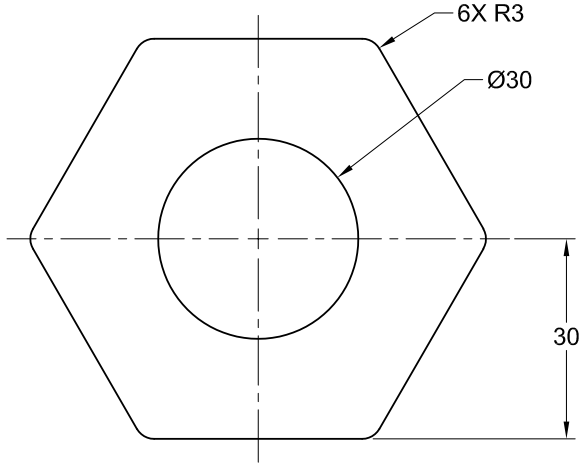

Figure 2-62 *Profile for Exercise 3*

Evaluation Copy. Do not reproduce. For information visit www.cadcim.com

Answers to Self-Evaluation Test

1. Sketch View, **2.** A, **3. Chamfer**, **4. No Trim**, **5.** 200, **6. Arc by 3 points**, **7.** T, **8.** T, **9.** T, **10.** T

Evaluation Copy. Do not reproduce. For information visit www.cadcim.com