Project 4

Pneumatic Gripper Assembly

In this project, you will create components for a Angle Clamp assembly and then assemble them. You need to create all the components as separate part files. The views and dimensions of the components are shown in Figures P4-3 through P4-10.

You can also download the model files for your reference from *www.cadcim.com*. To download the files, use the following path: *Textbooks > CAD/CAM PTC Creo Parametric> Creo Parametric 8.0 for Designers> Projects for Free Download > Project 4*

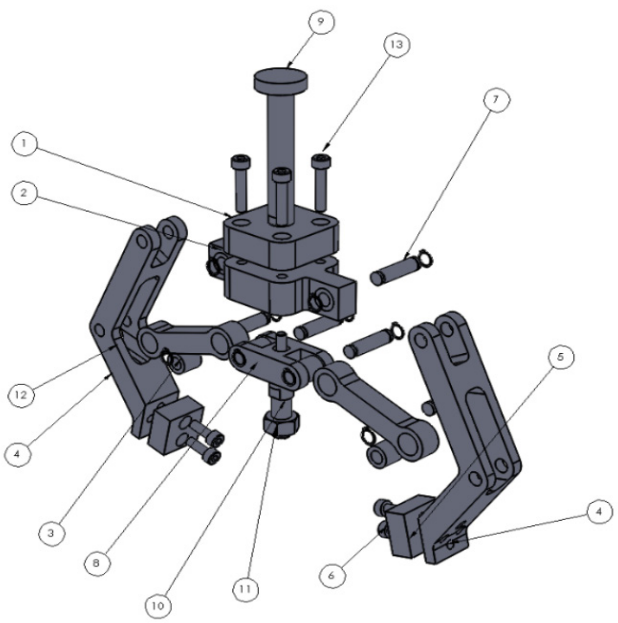

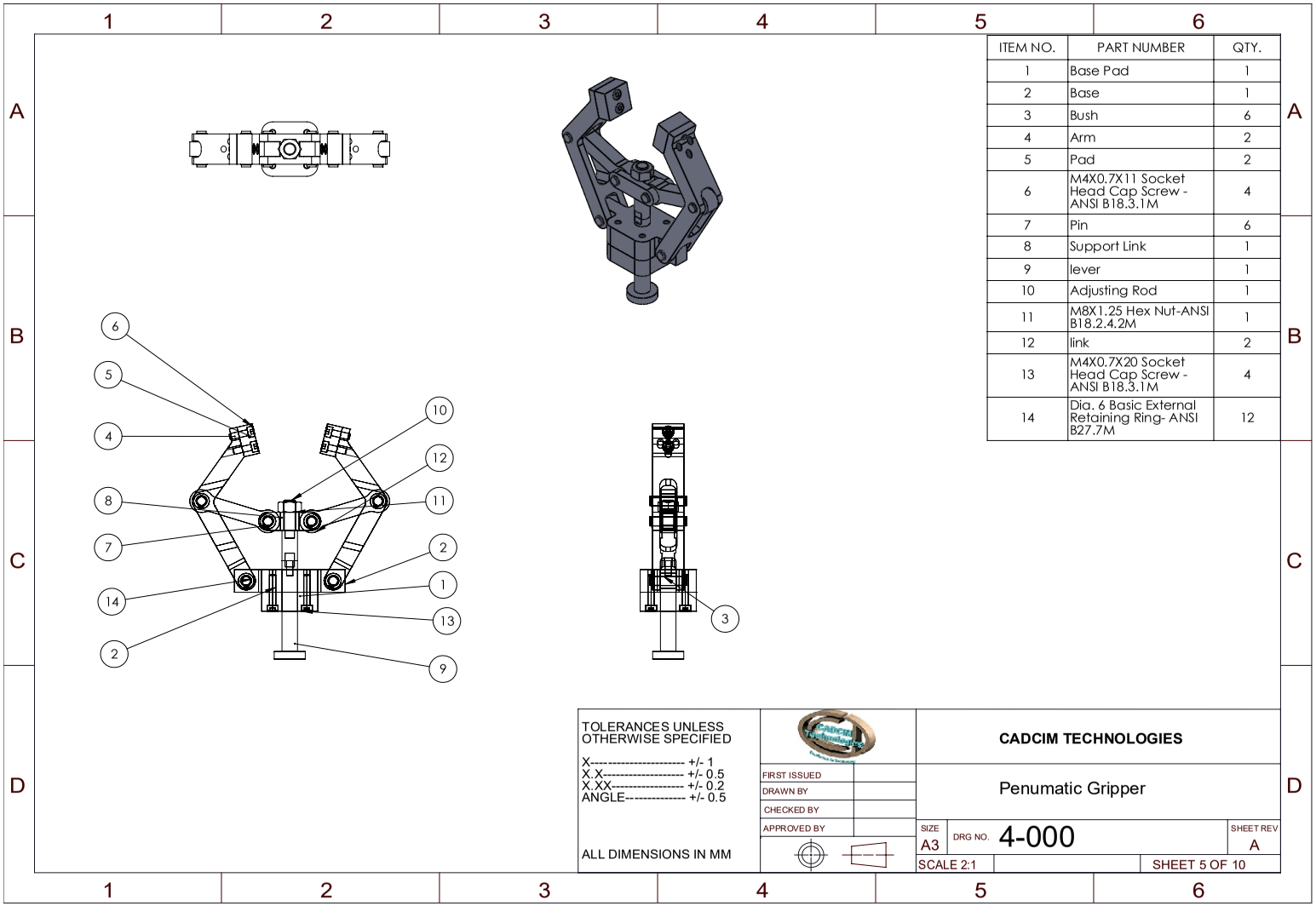

Figure P4-1 *The Pneumatic Gripper assembly*

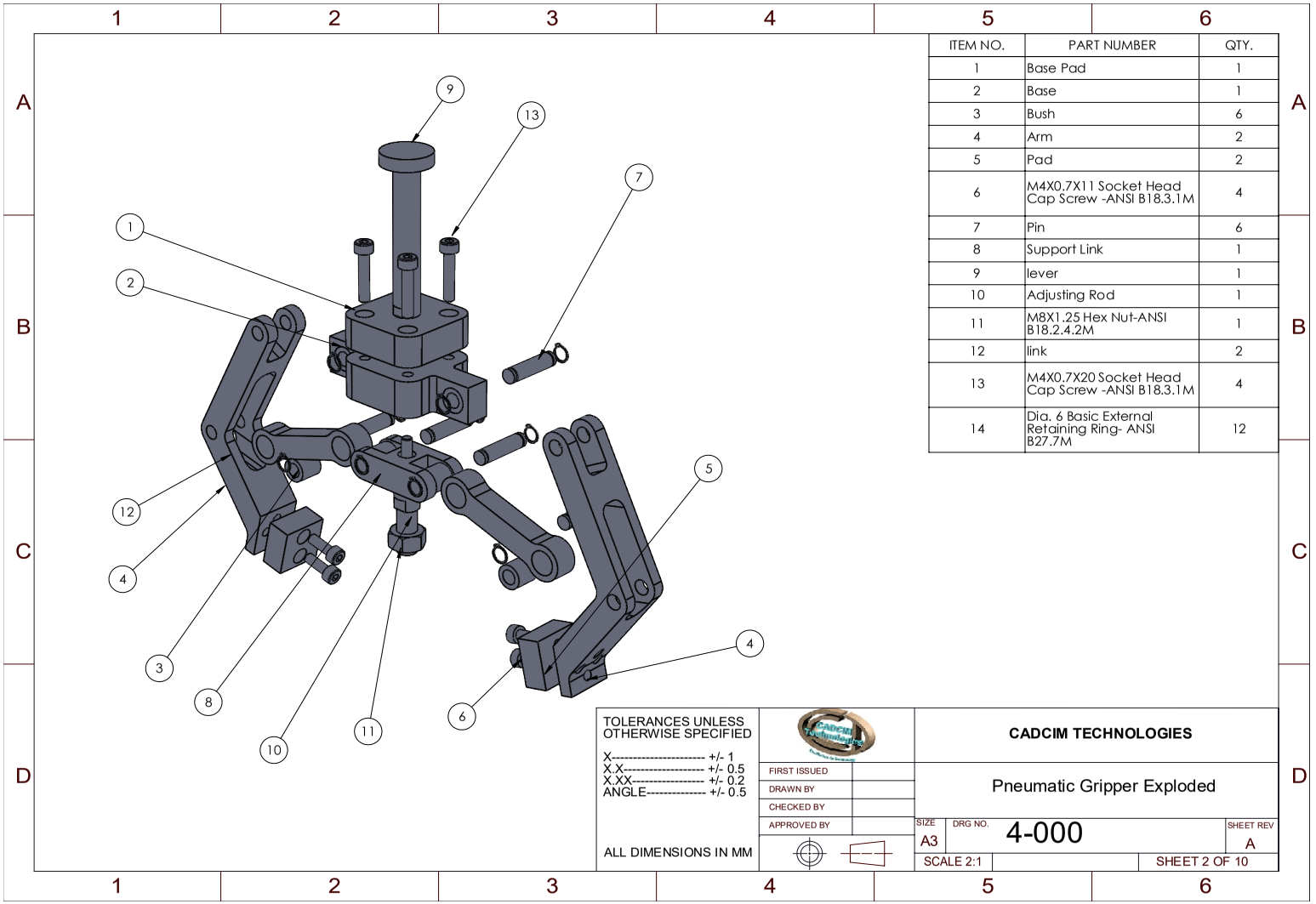

ITEM NO.	PART NUMBER	QTY.
1	Base Pad	1
2	Base	1
3	Bush	6
4	Arm	2
5	Pad	2
6	M4X0.7X11 Socket Head Cap Screw -ANSI B18.3.1M	4
7	Pin	6
8	Support Link	1
9	lever	1
10	Adjusting Rod	1
11	M8X1.25 Hex Nut-ANSI B18.2.4.2M	1
12	link	2
13	M4X0.7X20 Socket Head Cap Screw -ANSI B18.3.1M	4
14	Dia. 6 Basic External Retaining Ring- ANSI B27.7M	12

TOLERANCES UNLESS OTHERWISE SPECIFIED

X---------- +/- 1
X.X---------- +/- 0.5
X.XX---------- +/- 0.2
ANGLE---------- +/- 0.5

ALL DIMENSIONS IN MM

FIRST ISSUED
DRAWN BY
CHECKED BY
APPROVED BY

CADCIM TECHNOLOGIES

Pneumatic Gripper Exploded

SIZE A3 | DRG NO. 4-000 | SHEET REV A

SCALE 2:1 | SHEET 2 OF 10

Figure P4-2 *The exploded view of Pneumatic Gripper assembly*

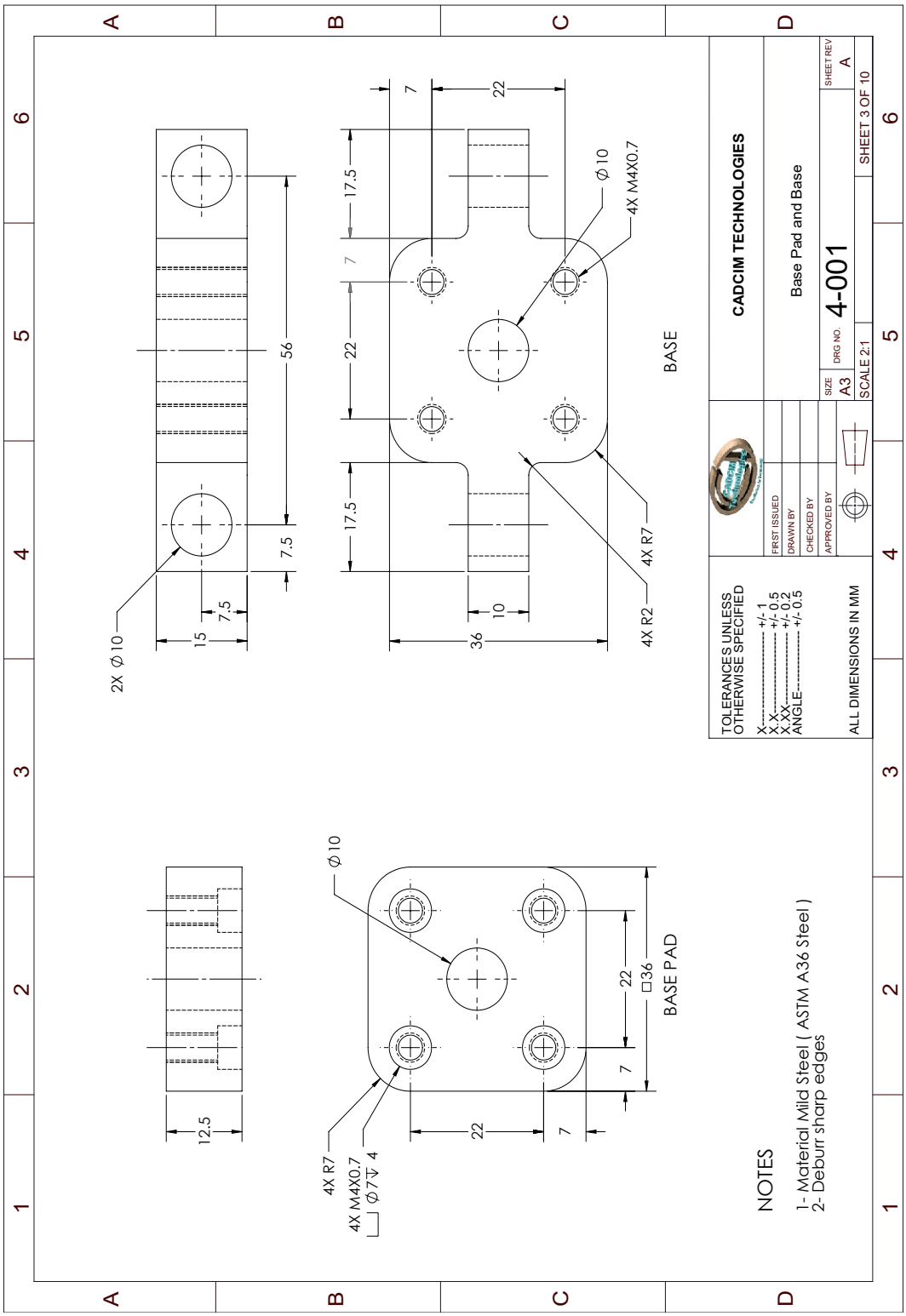

Figure P4-3 *Views and dimensions of Base Plate and Base*

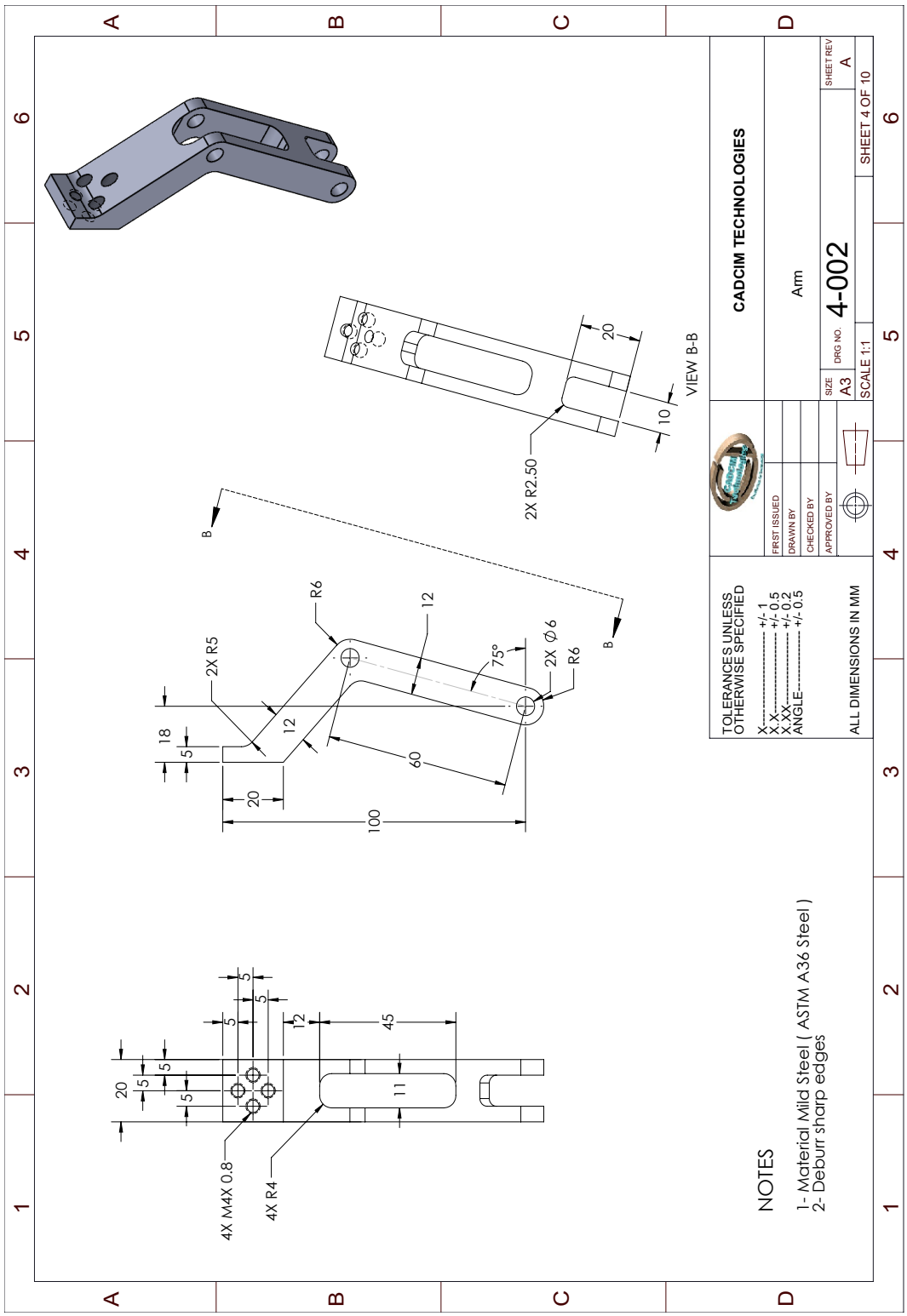

Figure P4-4 *Views and dimensions of Arm*

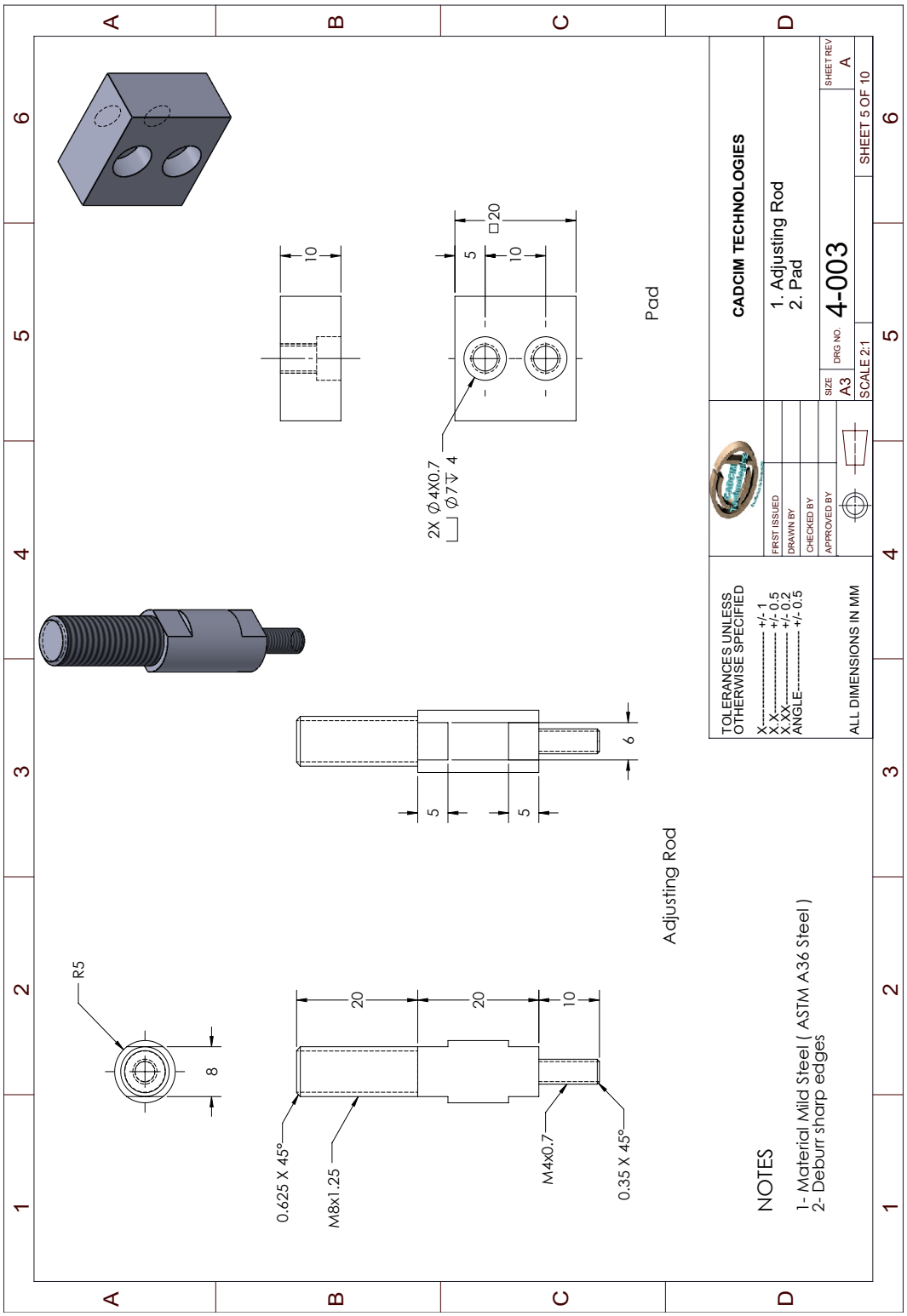

Figure P4-5 *Views and dimensions of Adjusting Rod and Pad*

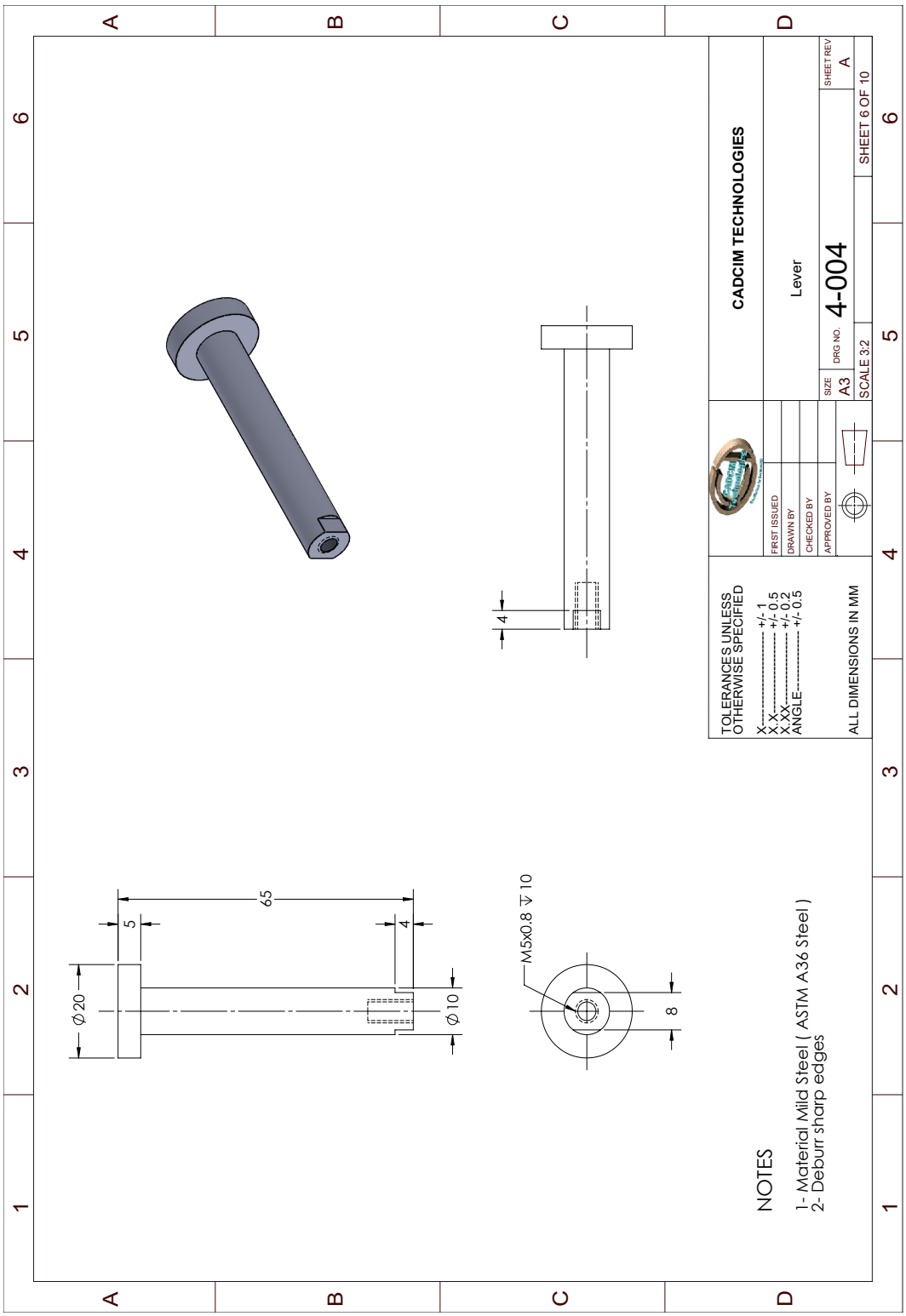

Figure P4-6 *Views and dimensions of Lever*

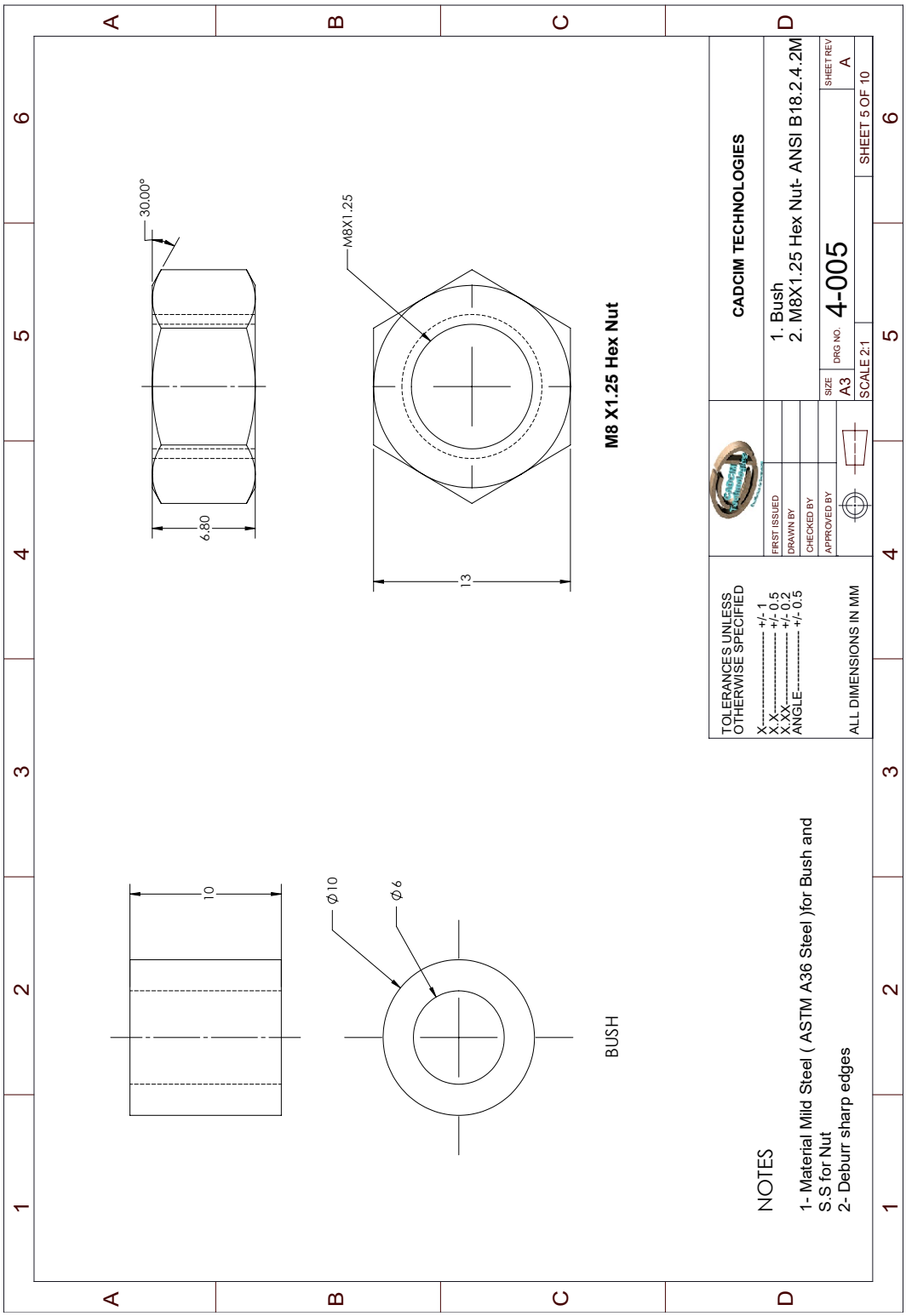

Figure P4-7 *Views and dimensions of Bush and Nut*

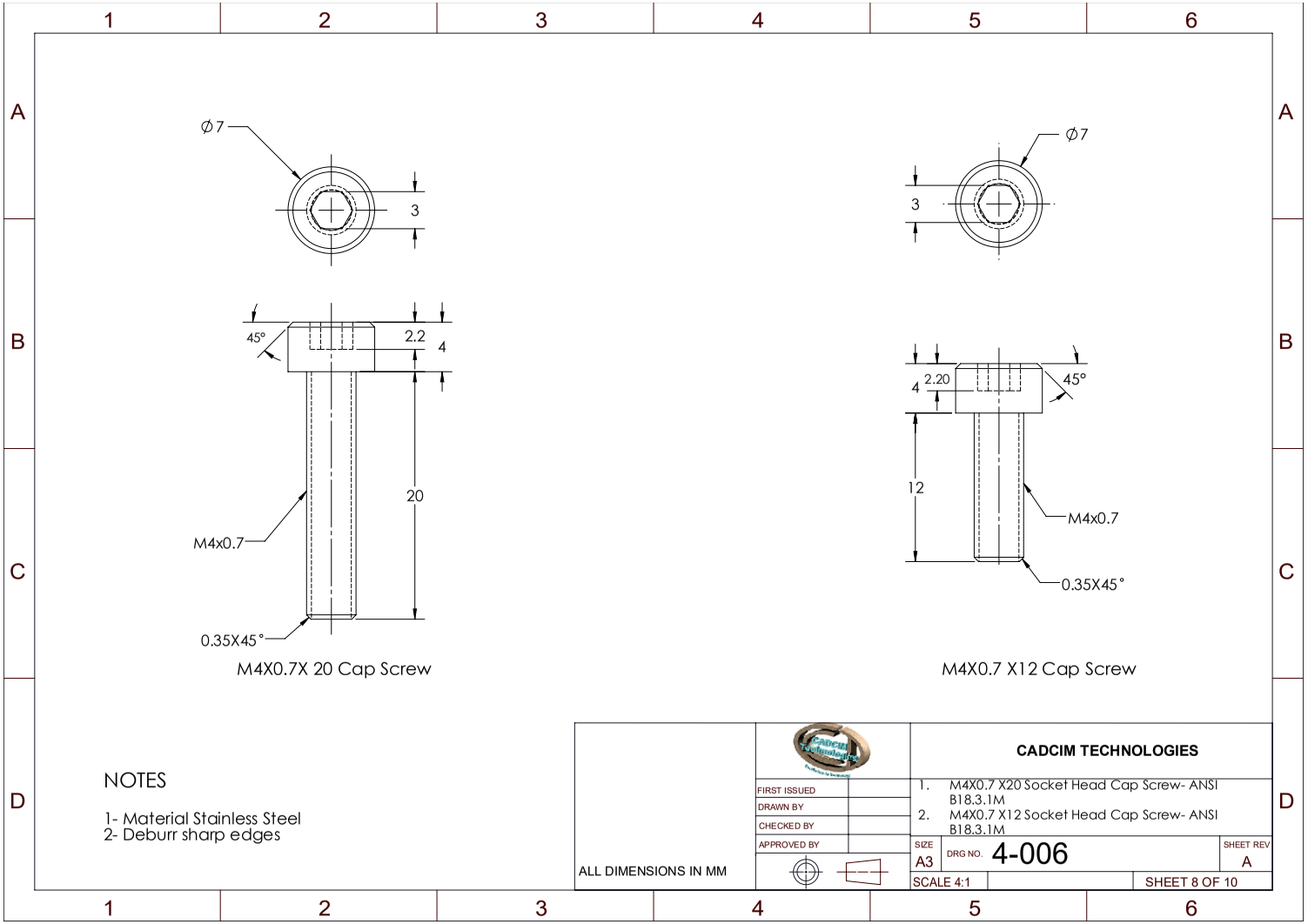

Figure P4-8 *Views and dimensions of Cap Screws*

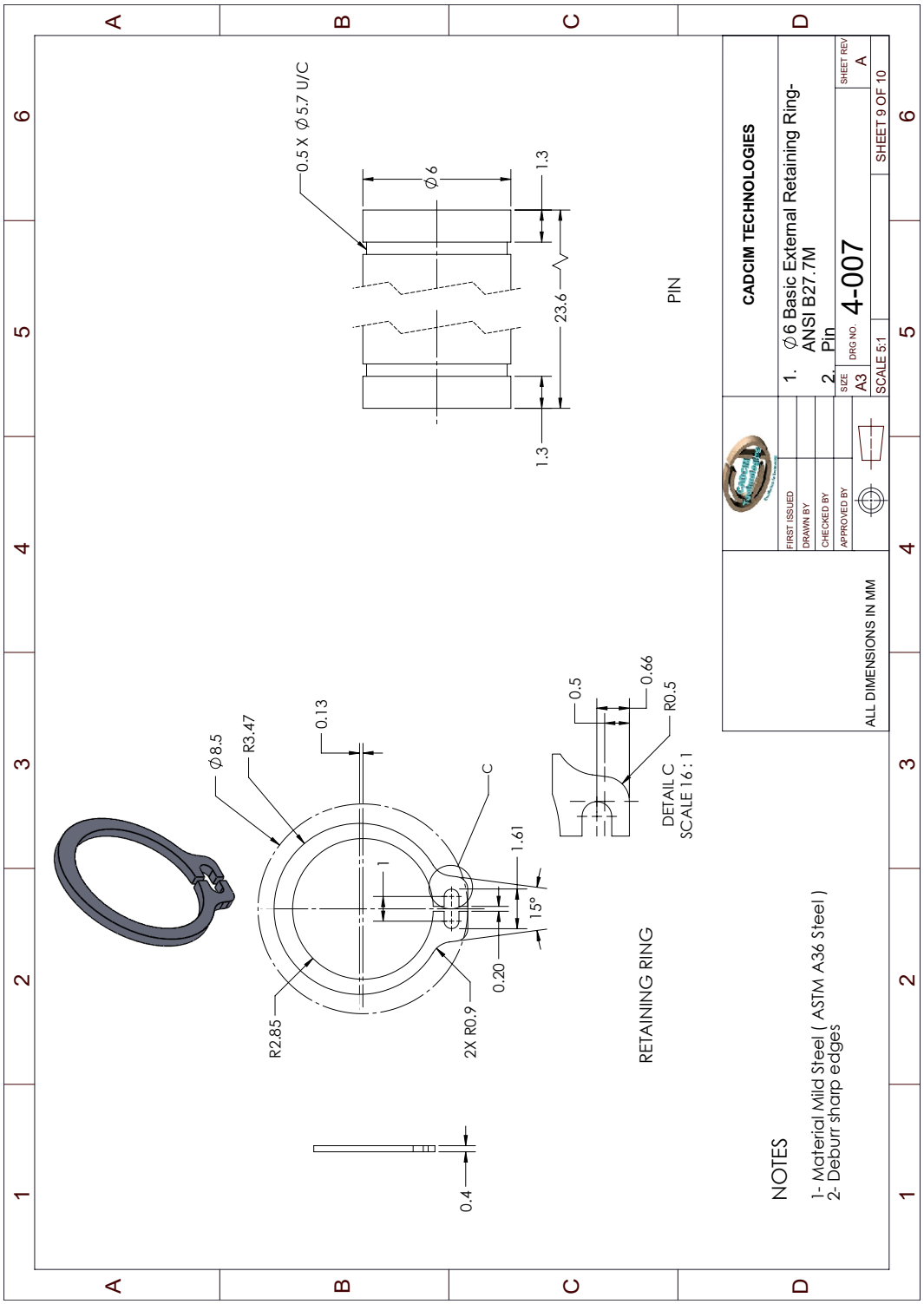

Figure P4-9 *Views and dimensions of Retaining Ring and Pin*

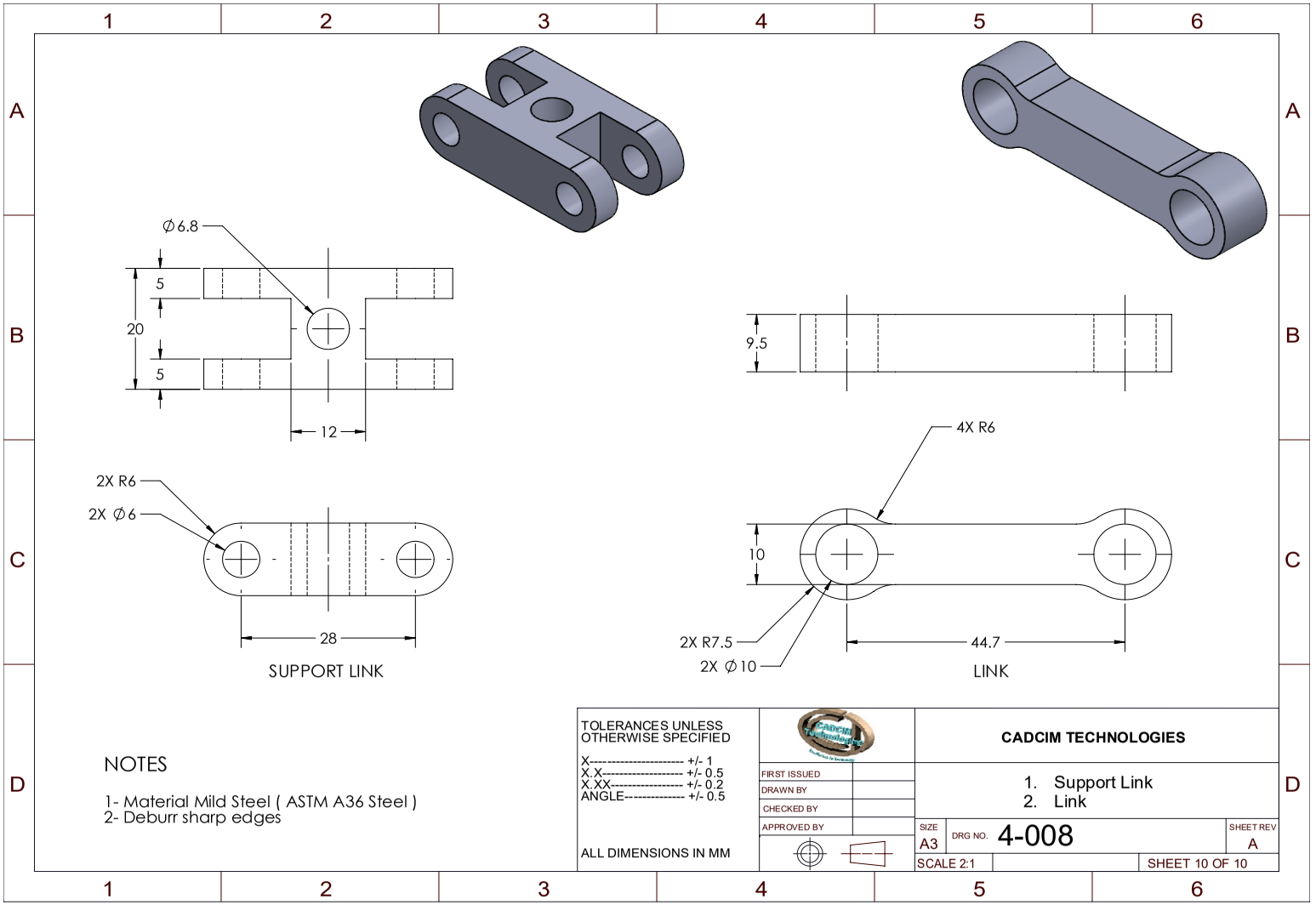

Figure P4-10 *Views and dimensions of Support Link and Link*

This page is intentionally left blank