# Project 1

# Car Jack Assembly

In this project, you will create components for a Car Jack assembly and then assemble them, refer to Figure P1-1. An exploded view of the assembly is shown in Figure P1-2. You need to create all the components as separate part files. The views and dimensions of the components are shown in Figures P1-3 through P1-18. **(Expected time: 3 hr 30 min)**

You can also download the model files for your reference from *www.cadcim.com*. To download the files, use the following path: *Textbooks > CAD/CAM > PTC Creo Parametric> Creo Parametric 8.0 for Designers> Projects for Free Download > Project 1*

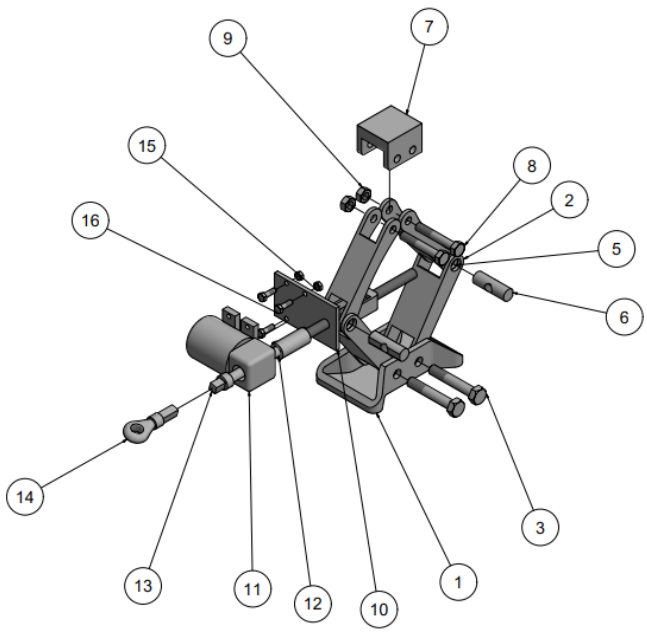

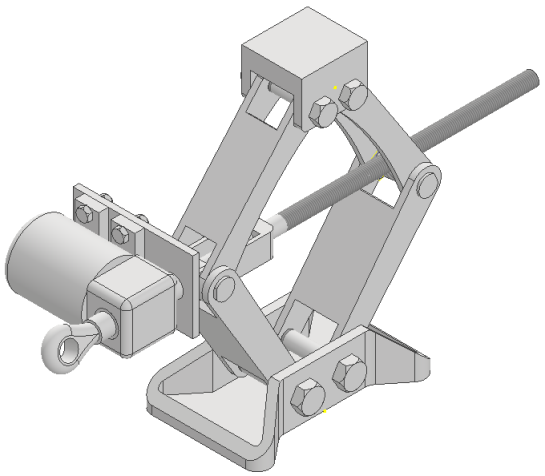

***Figure P1-1*** *The Car Jack assembly*

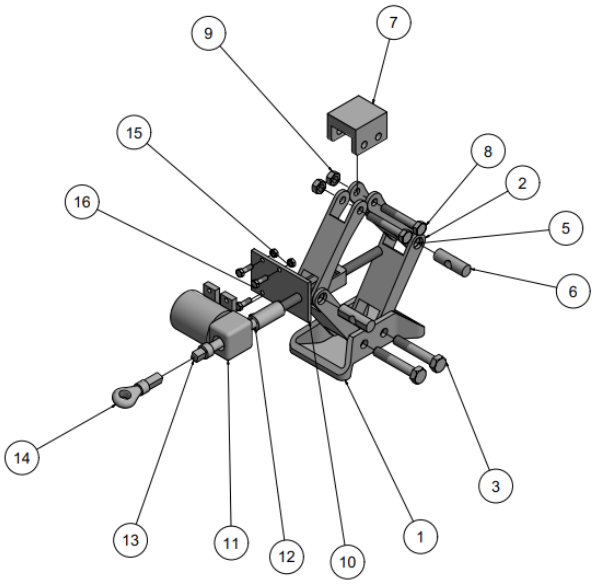


| PARTS LIST | | |
|---|---|---|
| ITEM | PART NUMBER | QTY |
| 1 | Jack Base | 1 |
| 2 | Jack Bottom leg | 2 |
| 3 | M12X1.75 Hex Bolt | 2 |
| 4 | M12X1.75 Nut | 2 |
| 5 | Jack upper leg | 2 |
| 6 | Jack Pin with thread | 2 |
| 7 | Jack Cap | 1 |
| 8 | M10X1.5 Hex Bolt | 2 |
| 9 | M10X1.5 Nut | 2 |
| 10 | Screw Base | 1 |
| 11 | Jack Motor Case | 1 |
| 12 | Jack Rotor | 1 |
| 13 | Jack Screw | 1 |
| 14 | Manual Screw | 1 |
| 15 | M6X1.0 Nut | 4 |
| 16 | M6X1.0 Hex Bolt | 4 |

***Figure P1-2*** *The exploded view of Car Jack assembly*

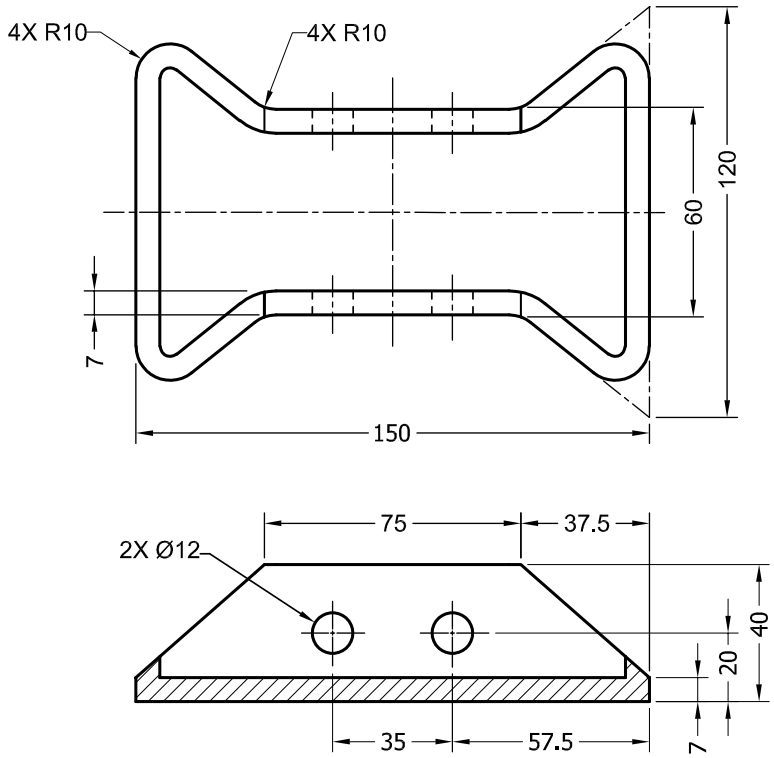


***Figure P1-3*** *Orthographic views and dimensions of Jack Base*

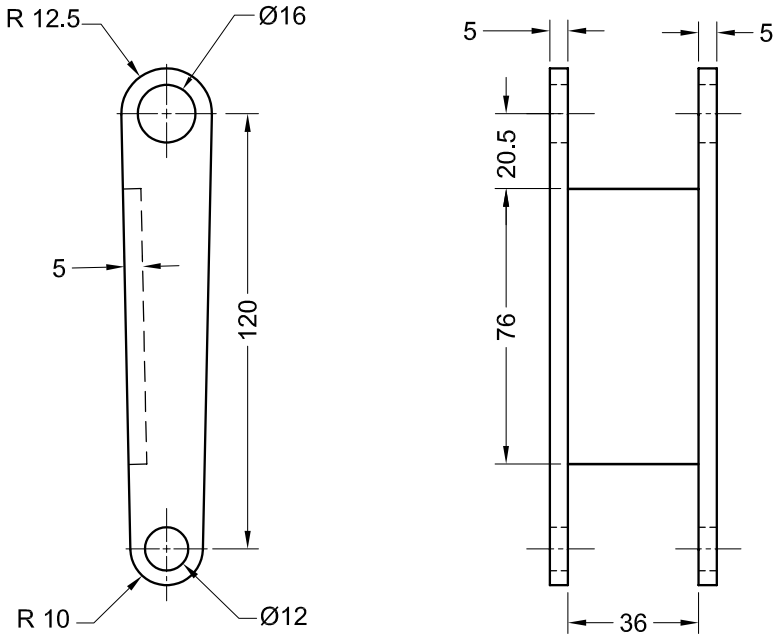


***Figure P1-4*** *Orthographic views and dimensions of Jack Bottom Leg*

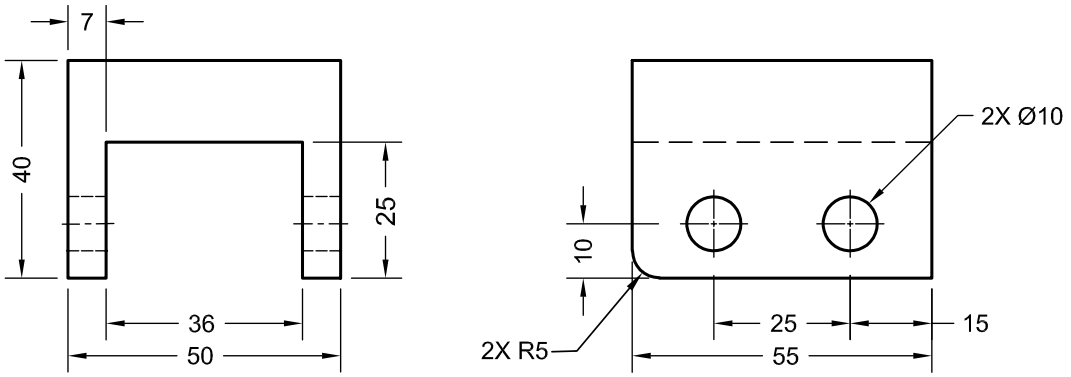


***Figure P1-5*** *Orthographic views and dimensions of Jack Cap*

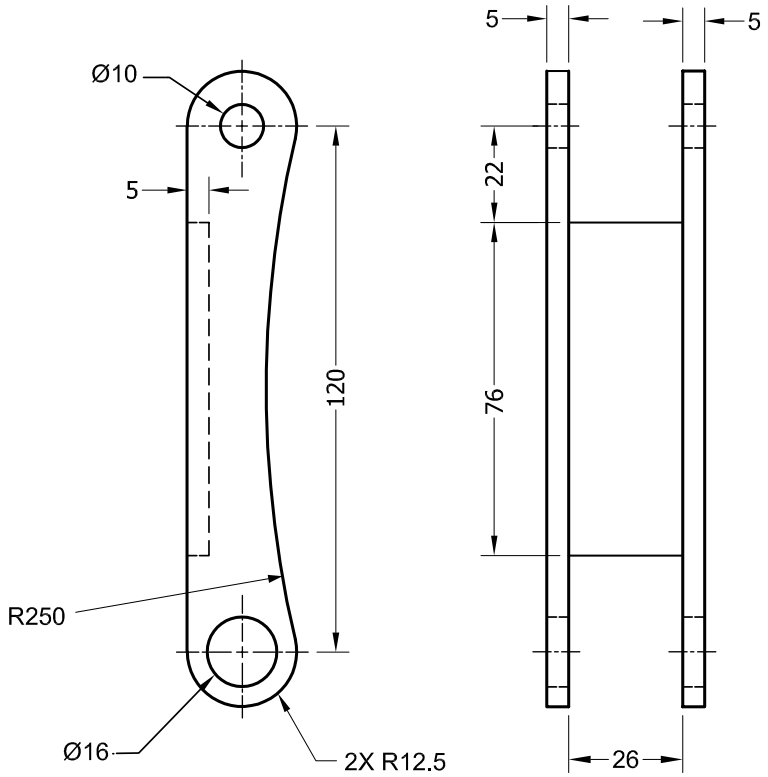


***Figure P1-6*** *Orthographic views and dimensions of Jack Upper Leg*

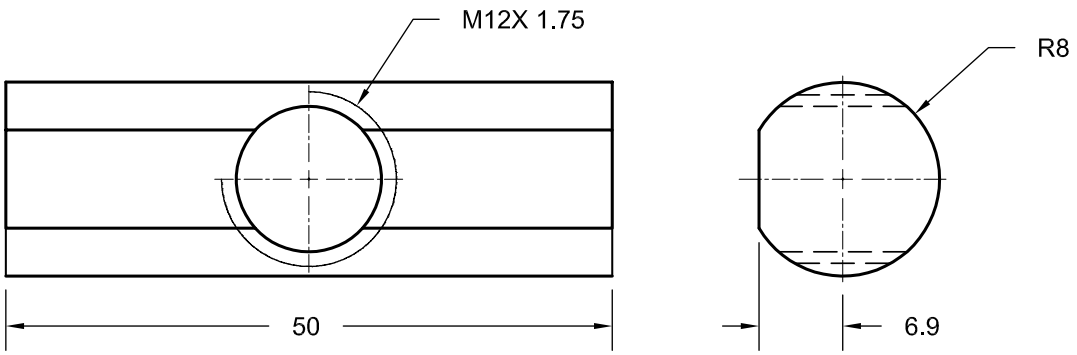


***Figure P1-7*** *Orthographic views and dimensions of Jack Pin with thread*

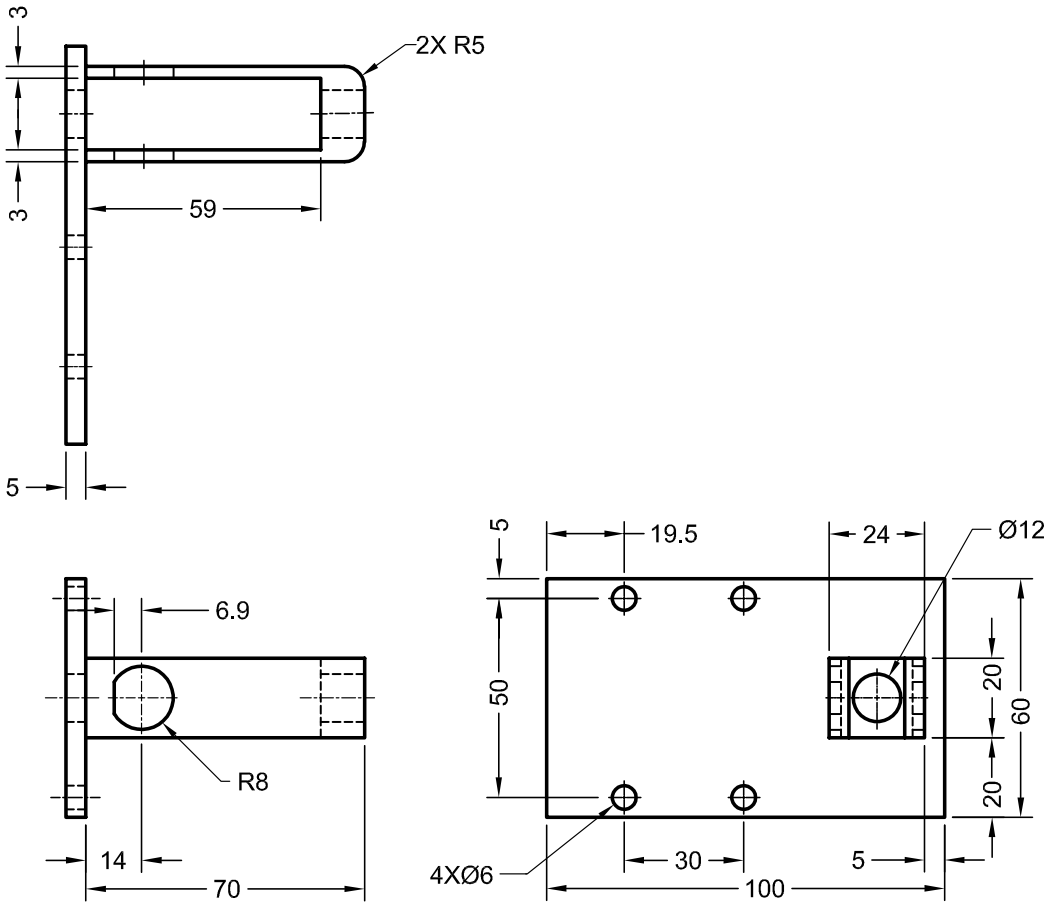


***Figure P1-8*** *Orthographic views and dimensions of Screw Base*

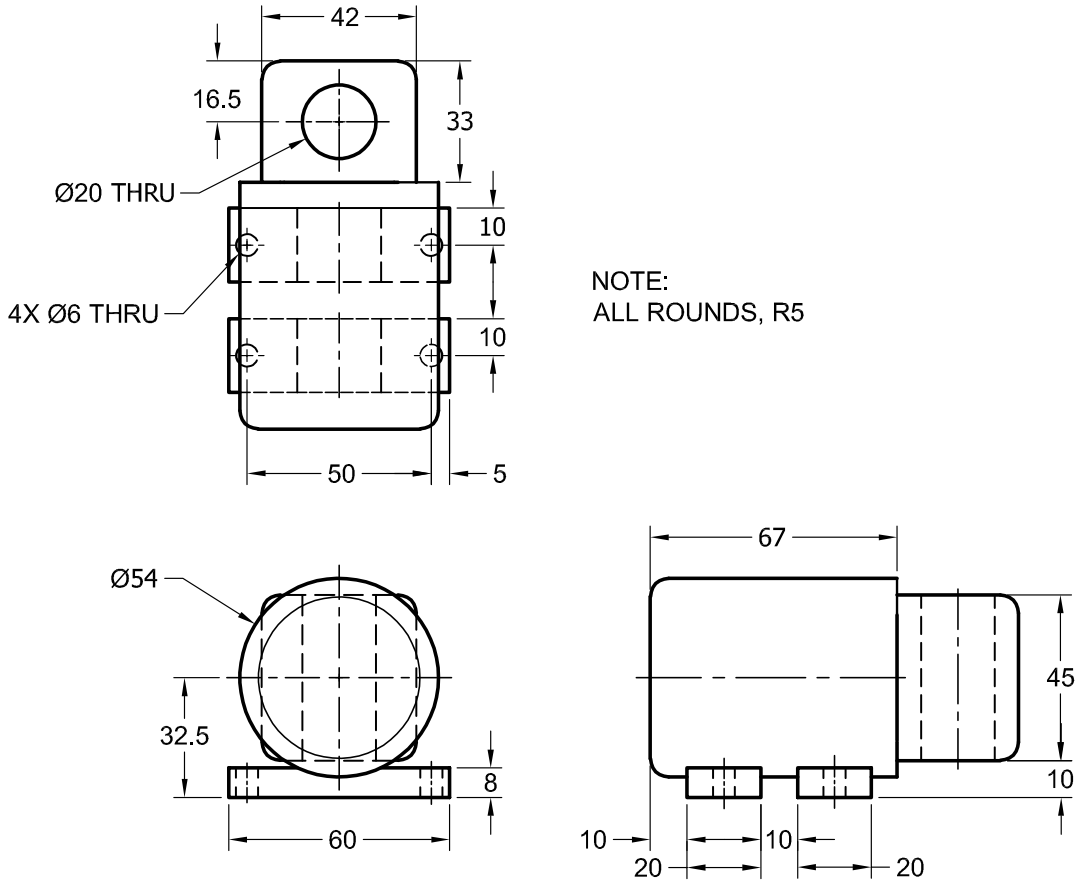


***Figure P1-9*** *Orthographic views and dimensions of Jack Motor Case*

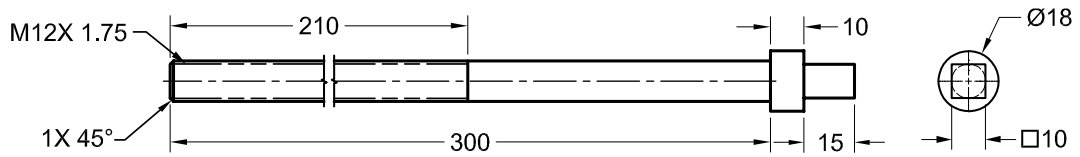


***Figure P1-10*** *Orthographic views and dimensions of Jack Screw*

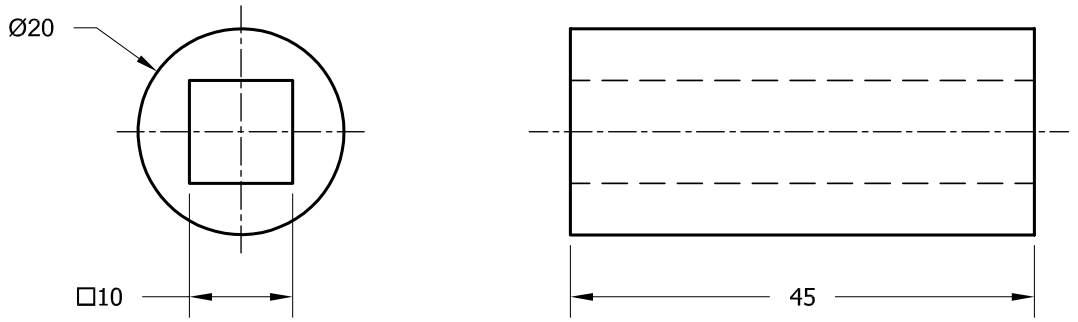


***Figure P1-11*** *Orthographic views and dimensions of Jack Rotor*

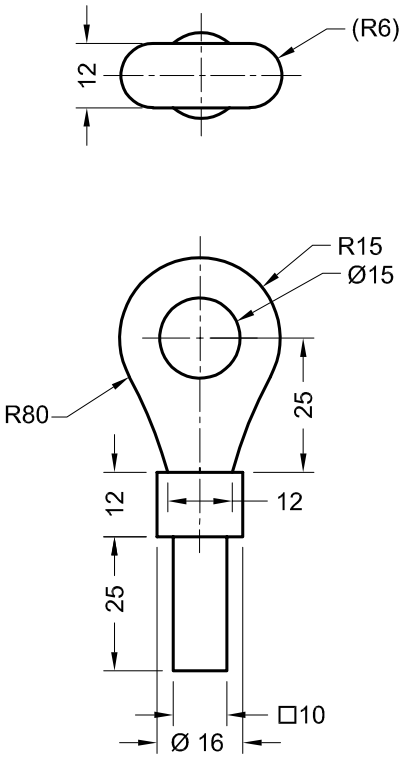


***Figure P1-12*** *Orthographic views and dimensions of Manual Screw*

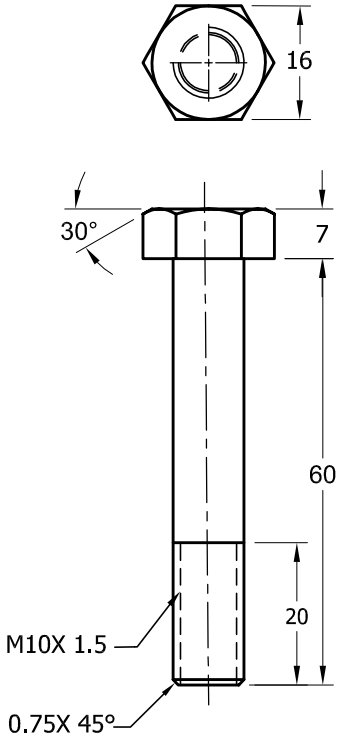


***Figure P1-13*** *Orthographic views and dimensions of the M10X 1.5 bolt*

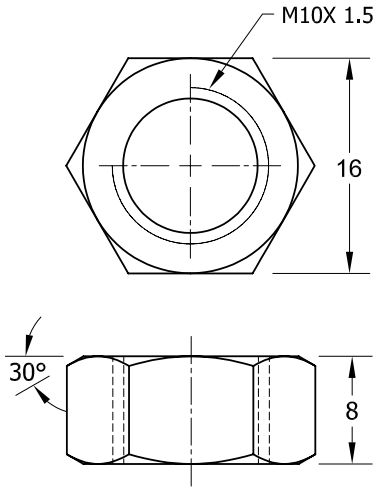


***Figure P1-14*** *Orthographic views and dimensions of the M10X 1.5 nut*

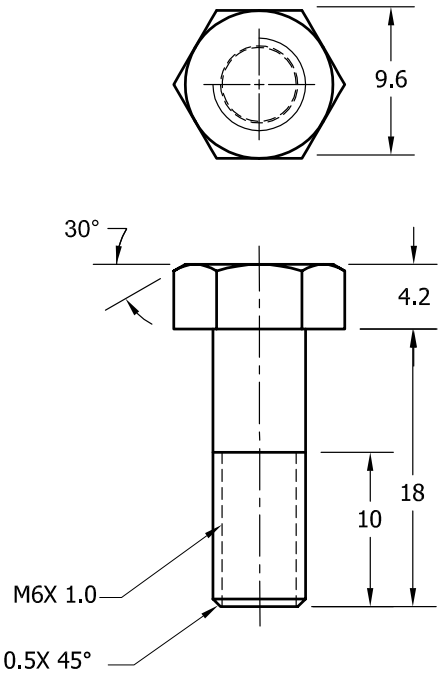


***Figure P1-15*** *Orthographic views and dimensions of the M6X 1.0 bolt*

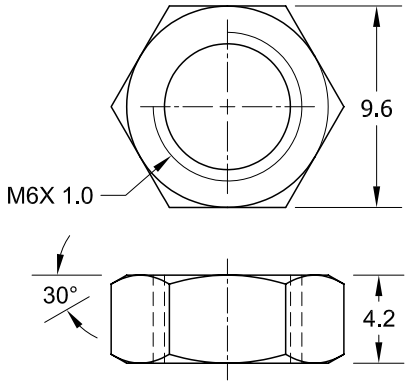


***Figure P1-16*** *Orthographic views and dimensions of the M6X 1.0 nut*

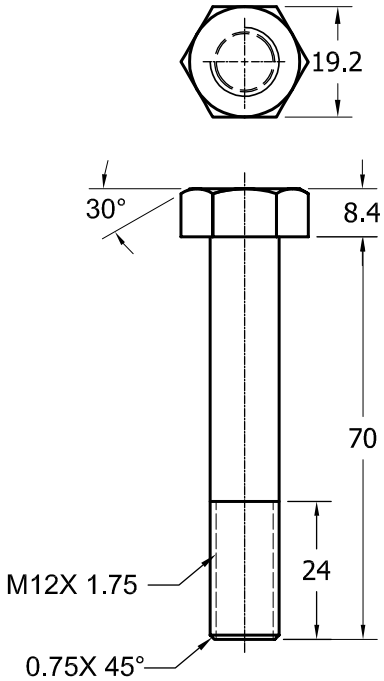


***Figure P1-17*** *Orthographic views and dimensions of the M12X 1.75 bolt*

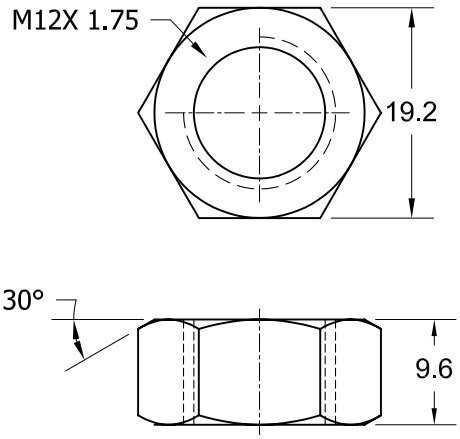


***Figure P1-18*** *Orthographic views and dimensions of the M12X 1.75 nut*