Chapter 3

Creating Sketches in the Sketch Mode-II

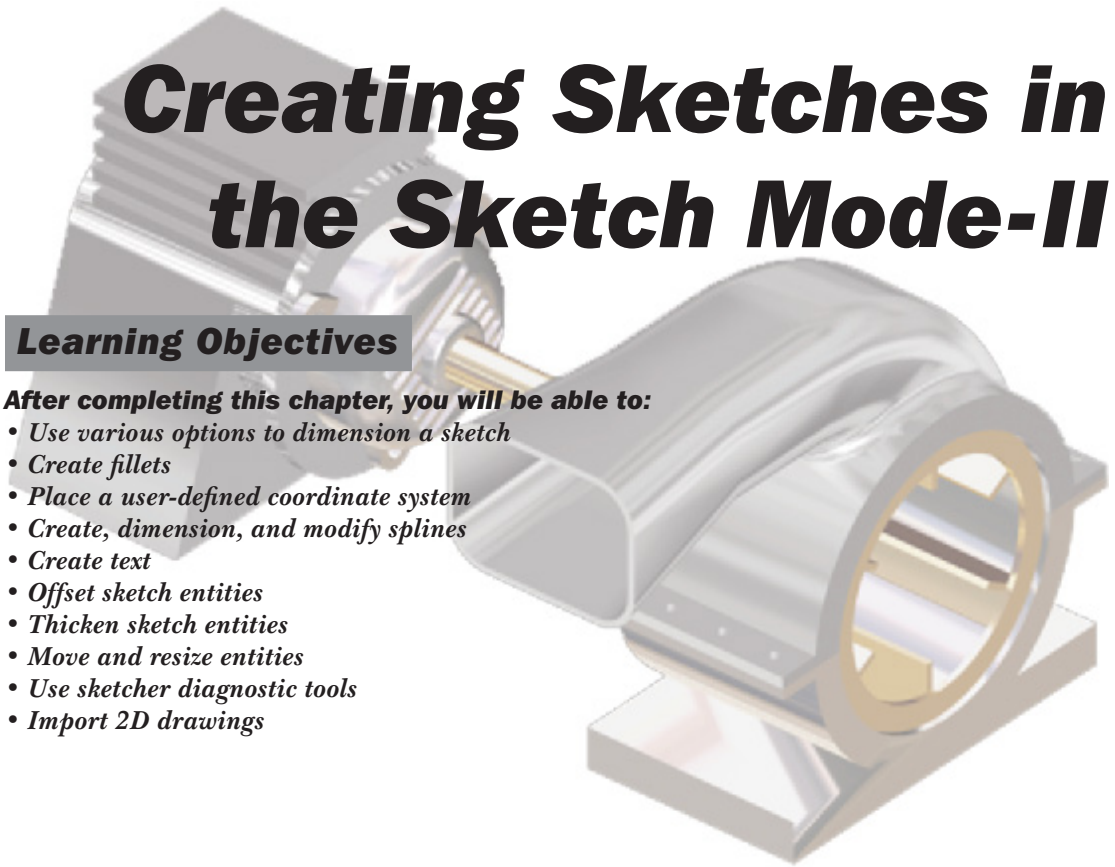

Learning Objectives

After completing this chapter, you will be able to:

- *Use various options to dimension a sketch*
- *Create fillets*
- *Place a user-defined coordinate system*
- *Create, dimension, and modify splines*
- *Create text*
- *Offset sketch entities*
- *Thicken sketch entities*
- *Move and resize entities*
- *Use sketcher diagnostic tools*
- *Import 2D drawings*

DIMENSIONING THE SKETCH

In Chapter 2, you learned dimensioning a sketch using the **Dimension** tool from the **Dimension** group. In this chapter, you will learn the use of the **Baseline** tool for dimensioning a sketch.

Dimensioning a Sketch Using the Baseline Tool

Ribbon: Sketch > Dimension > Baseline

In Creo Parametric, the **Baseline** tool is used to create dimensions in terms of horizontal and vertical distance values of an entity with respect to a specified baseline. This type of dimensioning in a drawing makes writing a CNC program for manufacturing a component easy.

The **Baseline** tool is available in the **Dimension** group. Using this tool, you can dimension a line, arc, conic, and so on. The following steps explain the procedure to create dimensions using the **Baseline** tool:

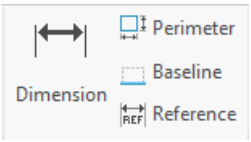

Figure 3-1 *The* ***Dimension*** *group*

1. Choose the **Baseline** tool from the **Dimension** group, refer to Figure 3-1.

2. Select the entity that will act as the baseline (origin or reference). Press the middle mouse button to place the dimension; the dimension **0.00** will be displayed where you place the dimension. Note that since the location value of the baseline is taken as the origin, the dimension value of the baseline entity will become 0.00. The dimension values of all other entities dimensioned with reference to the baseline will be measured from this origin.

   Depending upon the entity selected as the baseline, the horizontal or vertical location values of the entity will be placed. For example, if you select a vertical line, the value of its location will be placed vertically. Similarly, if you select a horizontal line, the value of its location will be placed horizontally.

   You can dimension arcs, circles, and splines by using the two options that are displayed on invoking the **Baseline** tool. If you select the center of a circle or an arc for baseline dimensioning and press the middle mouse button, the **Dim Orientation** dialog box will be displayed, as shown in Figure 3-2. Also, you will be prompted to select the orientation. Select the required radio button from this dialog box and choose the **Accept** button; the dimension will be placed based on the orientation selected.

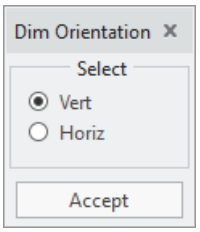

Figure 3-2 *The* ***Dim Orientation*** *dialog box*

3. Next, choose the **Dimension** tool from the **Dimension** group. Select the baseline dimension that was placed earlier and then select the entity to dimension. Now, press the middle mouse button to place the dimension.

   The orientation of the dimension will depend upon the baseline dimension and the entity selected. Figure 3-3 shows a sketch dimensioned using the above-mentioned method. In this figure, the two baselines are dimensioned using the **Baseline** tool. Therefore, the dimensions

Evaluation Copy. Do not reproduce. For information visit www.cadcim.com

of these lines are displayed as 0.00. The remaining lines are dimensioned by selecting the baseline dimension and then the required entity by using the **Dimension** tool.

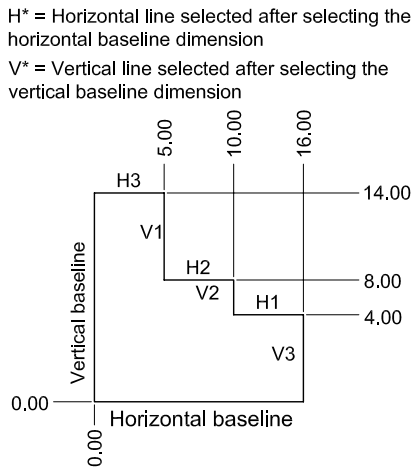

Figure 3-3 *Baseline dimensioning of a sketch*

Replacing the Dimensions of a Sketch Using the Replace Tool

Ribbon: Sketch > Operations > Replace

The **Replace** tool is used to replace a dimension with a new dimension in a sketch. To use this option, you must have a dimensioned sketch. The following steps explain the procedure to dimension a sketch using the **Replace** tool:

1. Select the dimension; a mini popup toolbar appears. Choose the **Replace** tool from the mini popup toolbar; the selected dimension will be deleted and you will be prompted to create a replacement dimension.

2. Select the entities between which you want to create a new dimension; the previous dimension will be replaced by a new dimension.

CREATING FILLETS

In the sketcher environment, you can create the following two types of fillets:

1. Circular fillets
2. Elliptical fillets

Creating Circular Fillets

Ribbon: Sketch > Sketching > Fillet drop-down > Circular

A circular fillet is the arc formed at the intersection of two lines, a line and an arc, or two arcs. This type of fillet is controlled by the radius or diameter dimension of the fillet. The

Evaluation Copy. Do not reproduce. For information visit www.cadcim.com

resulting fillet will depend on the location where the elements are selected. Figure 3-4 shows two non-parallel lines and Figure 3-5 shows the circular fillet created between them and construction lines are added that extend to the intersection of both lines. The circular fillet thus created is an arc with its endpoints tangent to the two lines.

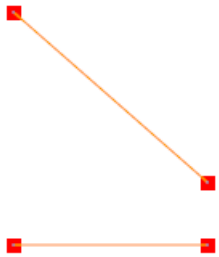

Figure 3-4 *Two lines that do not join*

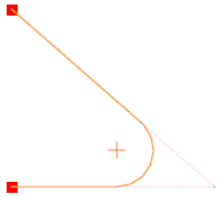

Figure 3-5 *Fillet created between the two lines*

Figure 3-6 shows two lines that join at a point and Figure 3-7 shows the circular fillet created at the joint.

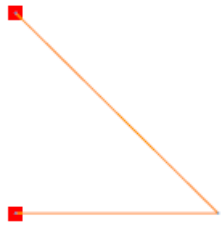

Figure 3-6 *Two lines joining at a point*

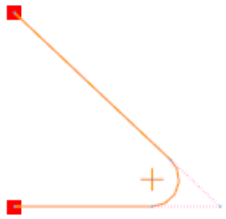

Figure 3-7 *Filleted corner*

Figure 3-8 shows two sets of arcs and Figure 3-9 shows the circular fillet created between the two arcs. The location where you select the arcs to create the fillet is important because the fillet is created tangent to the selection points on the arcs.

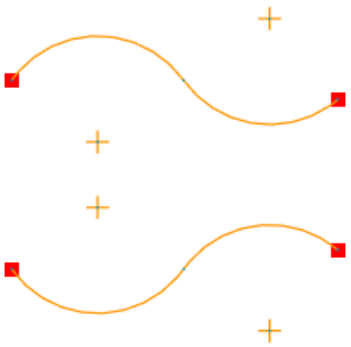

Figure 3-8 *Two sets of arcs*

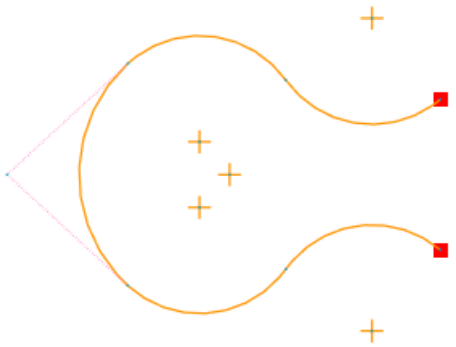

Figure 3-9 *Fillet created by selecting the endpoints*

To create circular fillets, there are two options, **Circular** and **Circular Trim**, available in the **Fillet** drop-down. When you create a fillet using the **Circular** option, the filleted entities are converted into construction geometries. When you create a fillet using the **Circular Trim** option, the portion extending beyond the entities gets trimmed automatically.

Evaluation Copy. Do not reproduce. For information visit www.cadcim.com

The procedure to create circular fillets using both the options is same and is discussed next.

1. Choose the **Circular** or **Circular Trim** option from the **Fillet** drop-down in the **Sketching** group; you will be prompted to select two entities.

2. Select the first entity for filleting by using the left mouse button; the red color of the first entity changes to green. Now, select the second entity. It will be drawn between the two selected entities as soon as you select the second entity.

3. Repeat step 2 until you have created all fillets.

Creating Elliptical Fillets

Ribbon: Sketch > Sketching > Fillet drop-down > Elliptical

An elliptical fillet is the arc in the form of an ellipse that joins two lines, two arcs, or a line and an arc. The geometry of the elliptical fillet depends on the location where you select the entities to create a fillet.

The advantage of elliptical fillets over circular fillets is that the geometry of elliptical fillets can be controlled by dimensions in two directions. Therefore, when an elliptical fillet is dynamically modified, its geometry can be controlled in either the x-direction or the y-direction resulting in more curved geometric shape than a circular fillet.

Figures 3-10 and 3-11 illustrate the elliptical fillet. Notice that a tangent constraint is automatically applied when you create a fillet.

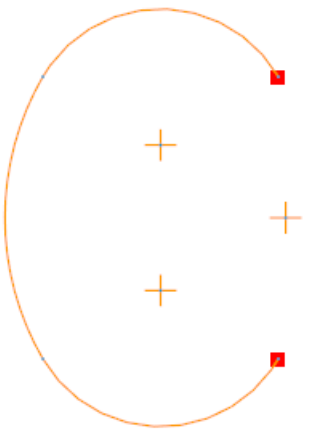

Figure 3-10 *Arcs to be filleted*

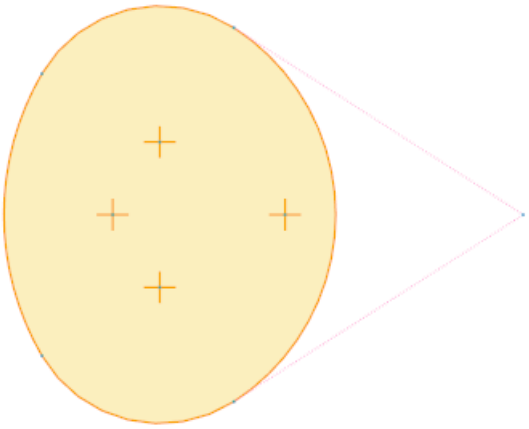

Figure 3-11 *Elliptical fillet created*

Similar to circular fillet, there are two options to create elliptical fillets, **Elliptical** and **Elliptical Trim**. The procedure to create elliptical fillets using any of these options is same. The procedure to create elliptical fillets is discussed next.

1. Choose the **Elliptical** or **Elliptical Trim** tool from the **Fillet** drop-down; you will be prompted to select two entities.

Evaluation Copy. Do not reproduce. For information visit www.cadcim.com

2. Select the first entity by clicking; the color of the entity changes to green.

3. Select the second entity. As soon as you select the second entity, the elliptical fillet is created. The shape of the elliptical fillet depends upon the specified points. After the fillet is created, you will be again prompted to select two entities for elliptical fillet.

4. Repeat steps 2 and 3 until you have created all fillets.

When you select an elliptical fillet to dimension, the **Ellipse Rad** dialog box will be displayed, as shown in Figure 3-12. There are two radio buttons in this dialog box. When the **Major Axis** radio button is selected, the elliptical fillet will be dimensioned radially along the X-direction. The **Minor Axis** radio button, when selected, dimensions the elliptical fillet radially in the Y-direction.

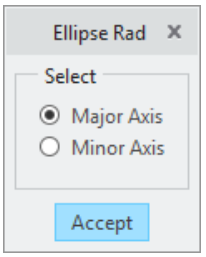

***Figure 3-12** The **Ellipse Rad** dialog box*

CREATING A REFERENCE COORDINATE SYSTEM

There are two types of coordinate systems, construction and geometric. As discussed earlier, the construction entities cannot be referenced outside the Sketcher environment whereas, the geometric entities can be. The **Coordinate System** tool in the **Datum** group is used to create a geometric coordinate system that will act as a reference for dimensioning. You can dimension the splines using the coordinate system. Thus, it provides you the flexibility to modify the spline points by specifying different coordinates with respect to the coordinate system.

The user-defined coordinate system is used in blend features to align different sections in a blend. It is also used in the **Assembly** and **Manufacturing** modes of Creo Parametric.

The following steps explain the procedure to create a coordinate system:

1. Choose the **Coordinate System** tool from the **Datum** group; you will be prompted to select the location for the coordinate system. The coordinate system symbol is attached to the cursor.

2. Place the coordinate system at the desired points on the screen by clicking the left mouse button. The coordinate system will be placed at as many places as you click in the graphics window. You can end the coordinate system creation by using the middle mouse button.

Note

If you add a coordinate system to a sketch, it must be dimensioned. But if the coordinate system is placed at the endpoints of a line, an arc, a spline, or at the center of an arc or a circle, it need not be dimensioned. In other words, a coordinate system must be referenced to an entity in a sketch.

WORKING WITH SPLINES

Splines are curved entities that pass through a number of intermediate points. Generally, splines are used to define the outer surface of a model. This is because the splines can provide different shape to curves and the flexibility to modify the surfaces that result from the splines. The application of splines is widely found in vehicle body designing.

Evaluation Copy. Do not reproduce. For information visit www.cadcim.com

Creating a Spline

Ribbon: Sketch > Sketching > Spline

To draw a spline, choose the **Spline** tool from the **Sketching** group. The steps to create a spline are discussed next.

1. Choose the **Spline** tool from the **Sketching** group; you will be prompted to select the location for spline.

2. Use the left mouse button to select the start point for the spline. Similarly, select additional points in the graphics window; a spline will be drawn passing through all specified points. Press the middle mouse button to end the creation of spline. All points through which the spline passes are called interpolation points.

Dimensioning of Splines

When a spline is drawn, the weak dimensions are automatically applied to the spline. A spline can be dimensioned manually by:

1. Dimensioning the endpoints
2. Radius of curvature dimensioning
3. Tangency dimensioning
4. Coordinate dimensioning
5. Dimensioning the interpolation points

Dimensioning the Endpoints

To dimension a spline by selecting the endpoints, you need to follow the steps given below:

1. Choose the **Dimension** tool from the **Dimension** group.

2. Select the two endpoints of the spline and place the horizontal or vertical dimension by pressing the middle mouse button twice. Figure 3-13 shows a spline that is dimensioned by selecting the endpoints.

Radius of Curvature Dimensioning

The radius of curvature of a spline can be dimensioned only if its tangency is defined. In other words, radius of curvature of a spline can be dimensioned only if the spline is tangent to an entity. For dimensioning the radius of curvature of a spline, you need to follow the steps given below:

1. Choose the **Dimension** tool from the **Dimension** group.

2. Select the endpoint of the spline where the tangency is defined.

3. Press the middle mouse button to place the dimension. Figure 3-14 shows the radius of curvature dimensioning of a spline.

Evaluation Copy. Do not reproduce. For information visit www.cadcim.com

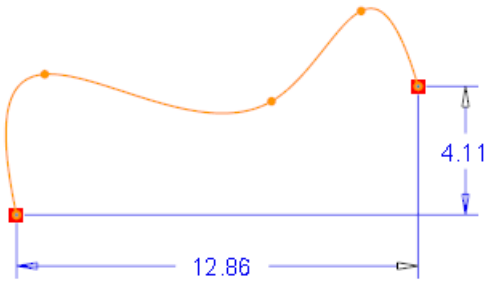

Figure 3-13 *Endpoint dimensioning*

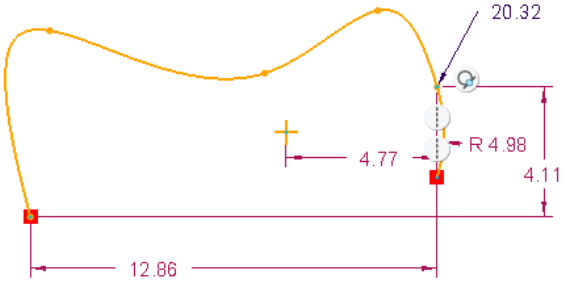

Figure 3-14 *Radius of curvature dimensioning*

Tangency or Angular Dimensioning

A spline can be dimensioned angularly with respect to a line tangent to it. This type of dimensioning is also called angular dimensioning. To angular dimension a spline and a line tangent to it, you need to follow the steps given below:

1. Choose the **Dimension** tool from the **Dimension** group.
2. Select the spline by clicking the left mouse button.
3. Select the entity tangent to the spline by clicking the left mouse button.
4. Select the interpolation point of the spline that is to be dimensioned tangentially.
5. Press the middle mouse button to place the dimension.

Coordinate Dimensioning

The spline can be dimensioned with respect to a user-defined coordinate system. Choose the **Coordinate System** tool from the **Sketching** group. On doing so, the coordinate system is attached to the cursor. Place the coordinate system in the graphics window. Now, the spline can be dimensioned with respect to the coordinate system.

Dimensioning the Interpolation Points

A spline can be dimensioned by dimensioning its interpolation points or vertices. This type of dimensioning is used when the designer wants the spline to be standard for all designs. This is because the exact curve can be duplicated if the interpolation points or the vertices of a spline are dimensioned.



Tip

A dimension can be moved by pressing and holding the left mouse button on the dimension and moving it. The dimension text is replaced by a green colored text. You can drag the dimension to the desired location in the graphics window and release the left mouse button to place the dimension at that point.

Evaluation Copy. Do not reproduce. For information visit www.cadcim.com

Modifying a Spline

In Creo Parametric, a spline can be modified by:

1. Moving the interpolation points of the spline.
2. Adding points to a spline.
3. Deleting points of a spline.
4. Creating a control polygon and moving its control points.
5. Modifying the dimensions of the spline.

Moving the Points of a Spline

The position of the interpolation points can be dynamically modified. To modify a spline, select an interpolation point on the spline and then drag it to modify the shape of the spline.

Alternatively, select the spline and choose the **Modify** option from the mini popup toolbar or double-click on the spline; the **Spline** tab will be displayed in the **Ribbon** with the options and buttons to modify a spline.

The interpolation points of the spline appear in black crossmarks in the graphics window. Drag the interpolation points to modify the shape of the spline.

Adding Interpolation Points to a Spline

To add interpolation points to a spline, double-click on the spline to invoke the **Spline** tab. Next, right-click on the spline and choose the **Add Point** option from the shortcut menu; a point is added to the spline where the spline was selected. The new point appears in black crossmark. Remember that, you cannot increase the length of the spline by adding points before the start point and after the endpoint of the spline.

Deleting Interpolation Points of a Spline

To delete a point of a spline, double-click on it. Next, right-click on the point to be removed to invoke the shortcut menu. Choose the **Delete Point** option from the shortcut menu; the selected point is deleted. You can continue deleting vertices or points from a spline until only two end points are left in the spline.

Creating a Control Polygon and Moving its Control Points



When you draw a spline, it is associated with a control frame. The vertices of this frame are called control points. To create a control polygon, choose the **Modify spline using control points** button from the **Settings** area of the **Spline** tab. The control polygon will be displayed in the graphics window. If you have already added a strong dimension(s) to the spline, then on choosing the **Modify spline using control points** button in the **Spline** tab, the **Modify Spline** confirmation box will be displayed, as shown in Figure 3-15. Next, choose **Yes** to display the control polygon. The spline shape can be modified by dragging the control points on the polygon.

Evaluation Copy. Do not reproduce. For information visit www.cadcim.com

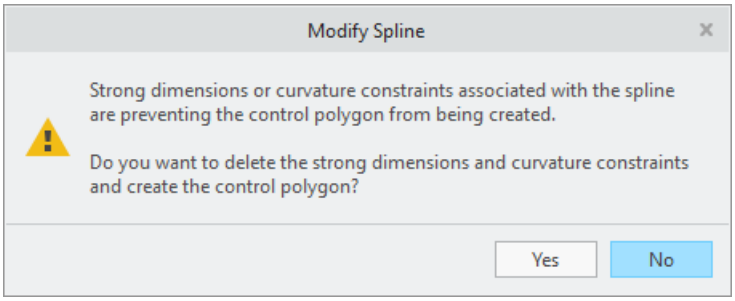

Figure 3-15 *The* ***Modify Spline*** *confirmation box*

Modifying the Dimensions of the Spline

The shape of the spline is controlled by the position of its interpolation points. Hence by modifying the dimensions, the position of the interpolation points are changed, which results in modification of the shape of the spline.

WRITING TEXT IN THE SKETCHER ENVIRONMENT

Ribbon: Sketch > Sketching > Text

In the sketcher environment, the text is written using the **Text** tool from the **Sketching** group. The following steps explain the procedure to write text in the sketcher environment:

1. Choose the **Text** tool from the **Sketching** group; you will be prompted to select the start point of line to determine the text height and orientation.

2. Specify the start point on the screen by left-clicking; you will be prompted to select the second point of line to determine the text height and orientation. Note that to write the text upright, the second point should be above the start point and in a straight line. If the second point is below the start point, the text will be written downward from right to left.

3. Specify the second point on the screen by left-clicking; the **Text** dialog box will be displayed, as shown in Figure 3-16 and a construction line will be drawn having height equal to the distance between the two points. The height and orientation of the text depends on the height and angle of the construction line. If the construction line is drawn at an angle, then the text will be written at that angle. By default, the dimension of the construction line is a strong dimension.

4. Enter the text in the **Text** edit box. The length of the text can be up to 79 characters. As you enter the text, the text will be displayed dynamically in the graphics window. To insert symbols with the text, choose the button next to the **Text** edit box; the **Text Symbol** palette will be displayed, as shown in Figure 3-17. Next, choose the desired symbol from the palette to insert it with the text. You can choose the desired font of the text from the **Font** drop-down list. The aspect ratio, slant angle, and spacing of the text can be controlled by using the slider bars available in the **Options** area. You can also modify the position of the text using the options available in the **Alignment** area of the dialog box.

Evaluation Copy. Do not reproduce. For information visit www.cadcim.com

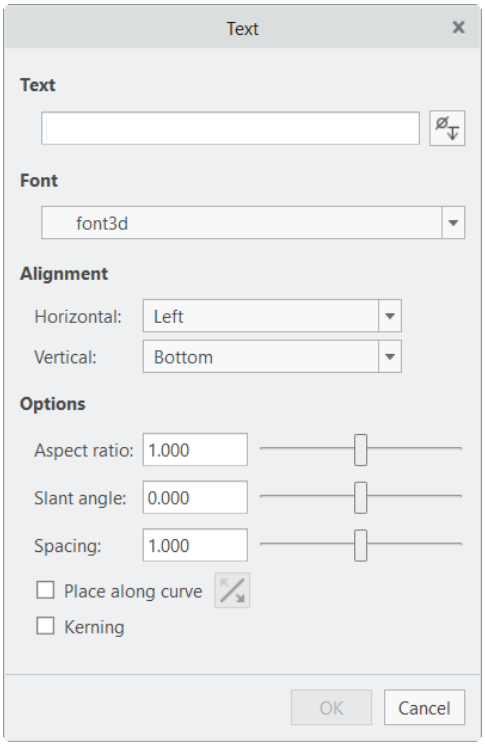

Figure 3-16 *The* ***Text*** *dialog box*

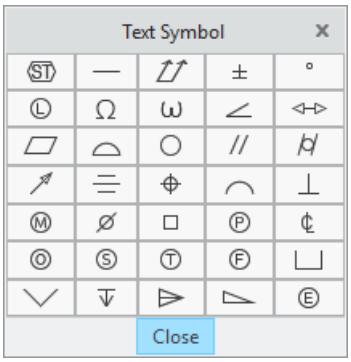

Figure 3-17 *The* ***Text Symbol*** *palette*

5. If you want to place the text along a curve, then first select the **Place along curve** check box and then select the curve from the drawing area; the text will be placed along the selected curve. You can flip the text to the other side of the selected curve by choosing the **Flip text to other side of curve** button. This button will get activated on selecting the **Place along curve** check box.

6. Choose the **OK** button in the **Text** dialog box to exit it.

Tip

You can also change the height and width of the text by choosing the Width and Height options available in the mini popup toolbar.

OFFSETTING SKETCHED ENTITIES

Ribbon: Sketch > Sketching > Offset

In the **Sketch** mode, the entities in a sketch can be offset by a specified distance. You can create offset entities of lines, arcs, or splines by using the **Offset** tool available in the **Sketching** group. The offset can be a positive or a negative value. The options available in this tool can be used to create offset of a single entity, a chain of two or more entities, or a loop of two or more entities. The following steps explain the procedure to create offset sketched entities:

Evaluation Copy. Do not reproduce. For information visit www.cadcim.com

1. Choose the **Offset** tool; the **Type** dialog box will be displayed with the **Single** radio button selected by default, as shown in Figure 3-18. To create an offset of a single sketched entity, choose the **Single** radio button and then select the entity to be offset; the **Enter offset in the direction of the arrow [Quit]** edit box appears on the top of the drawing area. Also, an arrow is displayed on the selected entity. This arrow shows the direction in which the resulting entity will be created.

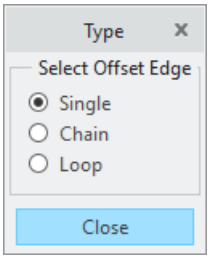

Figure 3-18 *The **Type** dialog box*

2. Enter the offset value in the **Enter offset in the direction of the arrow [Quit]** edit box and choose the **OK** button. Depending upon the value specified, a copy of the selected geometry will be created in the drawing area. Note that, if you specify a positive value, the entity will get offset in the direction of arrow, refer to Figure 3-19. If you specify a negative value in the edit box, the offset geometry will be created in a direction opposite to the direction of arrow, refer to Figure 3-20.

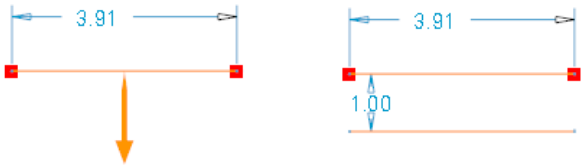

Figure 3-19 *Offset created with a positive value*

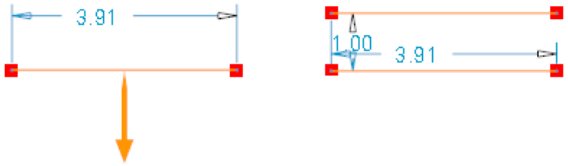

Figure 3-20 *Offset created with a negative value*

3. To create offset of a chain of two or more entities, select the **Chain** radio button from the **Type** dialog box and then select the entities in chain. Specify the value of offset in the **Enter offset in the direction of the arrow [Quit]** edit box and choose the **OK** button to create the offset of the selected entities, refer to Figure 3-21.

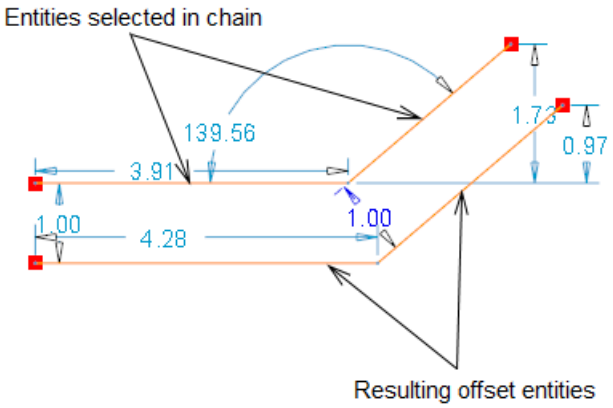

Figure 3-21 *Offset created in chain mode*

Evaluation Copy. Do not reproduce. For information visit www.cadcim.com

4. You can create offset of a closed loop generated by two or more entities. To do so, select the **Loop** radio button from the **Type** dialog box and then select an entity of the loop; the **Enter offset in the direction of the arrow [Quit]** edit box will be displayed above the drawing area. Specify the offset value in this edit box and choose the **OK** button; the offset of the selected loop will be created, refer to Figure 3-22.

5. If you select two chained entities of a loop with the **Chain** radio button selected; the **Menu Manager** will be displayed, refer to Figure 3-23. Choose the **Next** or **Previous** option to highlight the entities creating the loop. Next, choose the **Accept** option from the **Menu Manager** to select the highlighted entities and specify the offset value in the **Enter offset in the direction of the arrow [Quit]** edit box to create the offset of selected entities.

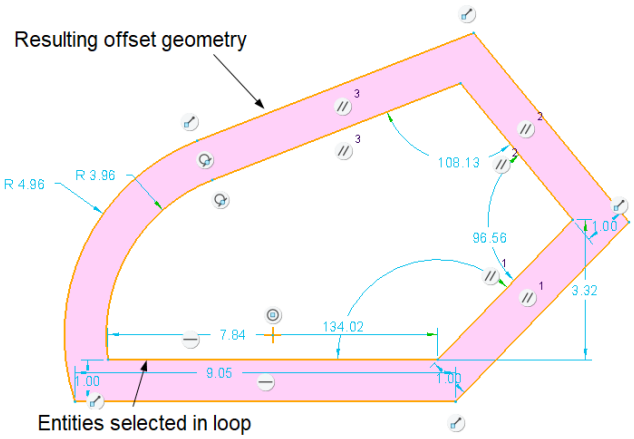

Figure 3-22 Offset created in loop mode

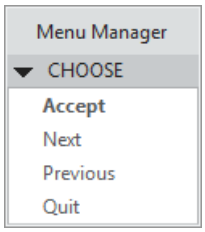

Figure 3-23 The Menu Manager

6. After you have created offset sketched entities, press the middle mouse button or choose the **Close** button in the **Type** dialog box to complete the procedure.

Note

If you offset entities by a large dimension, it is possible that Creo Parametric creates an offset chain that might have a different number of entities. For example, offsetting a spline by a large value causes the resulting spline to be broken into several pieces. If the offset value is changed, the system can piece together the broken spline so it becomes a single entity again.

THICKENING SKETCHED ENTITIES

Ribbon: Sketch > Sketching > Thicken

A thickened entity is a bidirectional offset entity whose components are separated by a user-defined distance. You can also add flat or circular end caps to connect the two offset entities. Depending on the offset and thickness values you enter, the resulting thickened entities can be on the either side, or both sides of the parent geometry. The following steps explain the procedure to create thickened sketched entities:

Evaluation Copy. Do not reproduce. For information visit www.cadcim.com

1. Choose the **Thicken** tool from the **Sketching** group of the **Sketch** tab; the **Type** dialog box is displayed. By default, the **Single** radio button is selected in the **Select Thicken Edge** area and the **Open** radio button is selected in the **End caps** area of the **Type** dialog box, as shown in Figure 3-24.

2. To thicken a single sketched entity, choose the **Single** radio button; to thicken a chain of two or more entities, choose the **Chain** radio button; and to thicken a closed loop generated by two or more entities, choose the **Loop** radio button in the **Select Thicken Edge** area of the **Type** dialog box.

3. You can create entities with flat or circular end caps by selecting the options in the **End caps** area of the **Type** dialog box, refer to Figure 3-24. To do so, choose the desired radio button from the **End caps** area of the **Type** dialog box before clicking on the entities. Next, follow the step 2 and step 3 to create geometries with flat or circular end caps, as shown in Figure 3-25.

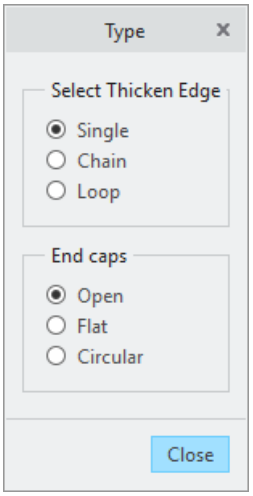

Figure 3-24 *The* ***Type*** *dialog box of the* ***Thicken*** *tool*

4. Select the entity(-ies) to thicken; the **Enter thickness [-Quit-]:**edit box is displayed on the top of the drawing area. Specify the value of thickness in the edit box and choose the **OK** button; an arrow is displayed on the entity and the **Enter offset in the direction of the arrow [Quit]** edit box is displayed. Specify the offset distance in the edit box and choose the **OK** button; the selected entity(ies) will get thicken. Next, press the middle mouse button or choose the **Close** button from the **Type** dialog box to close the **Type** dialog box.

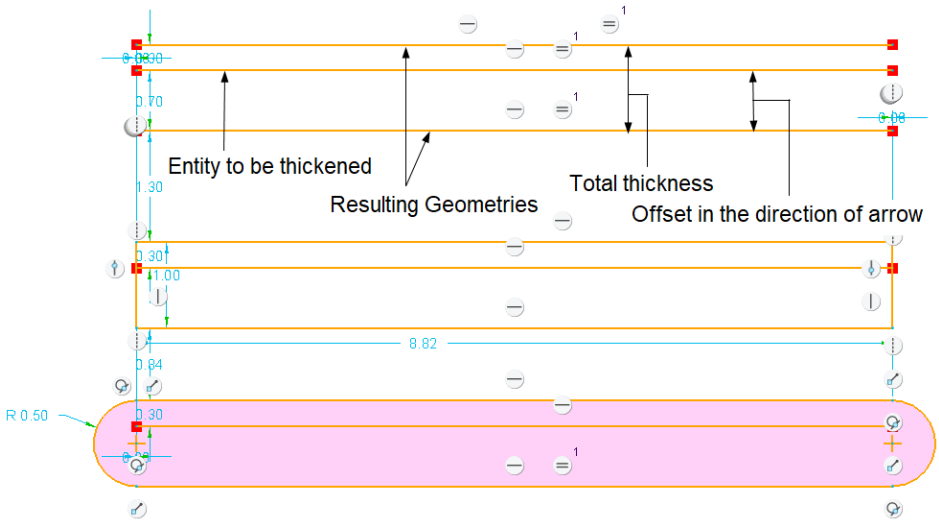

Figure 3-25 *Entities created using the* ***Open***, ***Flat***, *and* ***Circular*** *options of the* ***Thicken*** *tool*

Evaluation Copy. Do not reproduce. For information visit www.cadcim.com

ROTATING AND RESIZING ENTITIES

Ribbon: Sketch > Editing > Rotate Resize

The sketches can be translated, scaled, or rotated by using the **Rotate Resize** tool available in the **Editing** group. Select a sketch and then choose the **Rotate Resize** tool from the **Editing** group. On choosing this tool, the sketch, which consists of various entities, will act as a single entity. Also, the sketch appears green in color and is enclosed within a boundary box, as shown in Figure 3-26.

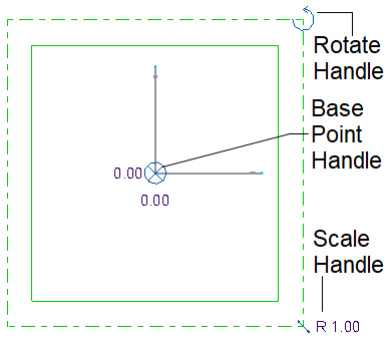

Figure 3-26 *Selected entities with move, rotate, and resize handles*

There are three handles that facilitate in scaling, rotating, and moving the selected sketch. The rotate handle is used to dynamically rotate the selected entities. The scale handle is used to dynamically scale the selected entities. The base point handle is used to pick the sketch and place it at any other location in the graphics window. To change the location of any of the three handles, click on the handle and drag it by pressing and holding the left mouse button; the selected handle will move along with the cursor. Place the symbol at the desired location. The following steps explain the procedure to move and resize a sketch:

1. Select the sketch to be rotated and scaled, and then choose the **Rotate Resize** tool; the **Rotate Resize** tab will be activated in the **Ribbon**. The options in these areas are used to move, scale, and rotate the sketch dynamically or by entering a value in the respective edit boxes. You can also select a reference about which you want to translate, rotate, or scale the sketch.

2. To move the sketch dynamically, select the move handle and then drag the handle to the required location; the sketch will be repositioned at the new location. You can also select a reference from the drawing area about which you want to translate, rotate, or scale the sketch and the reference will be displayed in move collector of the dashboard.

3. To dynamically rotate the sketch, select the rotate handle and then move the cursor; the sketch will rotate as you move the cursor. You can also enter the rotation angle in the **Rotate** edit box.

4. To scale the sketch, select the scale handle and then move the cursor. As you move the cursor, the sketch is scaled dynamically in the graphics window. You can also enter the scale value in the **Scale** edit box.

Evaluation Copy. Do not reproduce. For information visit www.cadcim.com

5. After the sketch has been moved and resized, choose the **OK** button from the **Rotate Resize** tab.

SKETCH DIAGNOSTIC TOOLS

As discussed earlier that a sketch-based feature uses a sketch to create desired geometry. Hence it is very necessary that the sketch should fulfill the requirements of a sketch-based feature. Creo Parametric provides you tools to diagnose and analyze the requirements of the sketch in the **Sketch** mode. The tools available in the **Inspect** group of the **Sketch** mode are used to diagnose the sketches. These tools are discussed next.

Feature Requirements

Ribbon: Sketch > Inspect > Feature Requirements



The **Feature Requirements** tool will be available only when you invoke the sketcher environment in the **Part** mode. It helps you to analyze whether the sketch is appropriate for the feature or not. This tool is very useful in creating internal sketches. In the sketcher environment of the **Part** mode, choose the **Feature Requirements** tool from the **Inspect** group of the **Sketch** mode to invoke the **Feature Requirements** dialog box, refer to Figure 3-27. The **Feature Requirement** dialog box lists the requirements of the current feature in the **Requirements** column and status of the feature in the **Status** column. The information displayed in this dialog box varies from feature to feature.

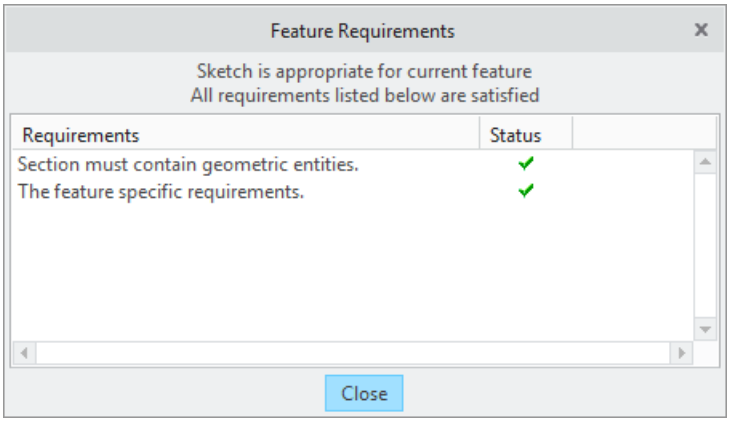

Figure 3-27 *The* ***Feature Requirements*** *dialog box*

Overlapping Geometry

Ribbon: Sketch > Inspect > Overlapping Geometry



This tool helps you to detect and highlight overlapping geometries in an active sketch. When you choose the **Overlapping Geometry** tool, the entities that are overlapping with each other will be highlighted in merlot color.

Evaluation Copy. Do not reproduce. For information visit www.cadcim.com

Highlight Open Ends

Ribbon: Sketch > Inspect > Highlight Open Ends

This tool is activated by default in the **Sketch** mode. The **Highlight Open Ends** tool highlights the end points of entities that do not coincide with end points of other entities. In other words, only the open ends of entities are highlighted when this tool is turned on.

Shade Closed Loops

Ribbon: Sketch > Inspect > Shade Closed Loops

This tool is used to detect closed loops formed by sketched entities. A closed loop is a chain of entities that forms a section and can be used for creating a solid feature. In the **Sketch** mode, the **Shade closed Loops** is activated by default. As a result, only the closed loops created with valid entities appear shaded in the drawing area. If you are creating a sketch with several closed loops one inside the other, the outermost loop will be shaded, and the shading of the internal loops will be alternated.

Tip

*Sketch diagnostic tools assist you in creating sketches. It is recommended that you do not turn off the **Shade Closed Loops** and **Highlight Open Ends** buttons while you are creating sketches for solid features.*

IMPORTING 2D DRAWINGS IN THE SKETCH MODE

Ribbon: Sketch > Get Data > File System

The two-dimensional (2D) drawings when opened in the sketcher environment can be saved in the *.sec* format. The *.sec* file can be used to create a solid model. You can use a prestored sketch by importing it in the modeling environment. The **File System** button in the **Get Data** group is used to import 2D sketches from other type of files stored in your computer. Using this button, you can save time in drawing the same or similar section again. The file formats from which the data can be imported are shown in Figure 3-28.

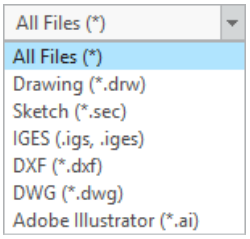

Figure 3-28 *File formats*

When you choose the **File System** button from the **Get Data** group; the **Open** dialog box will be displayed, as shown in Figure 3-29. You can use this dialog box to select and open the file.

When you select a drawing file created in the **Drawing** mode of Creo Parametric, the draft entities of that file will be imported and selected drawing will be opened in a window. Also, you will be prompted to select the entities to copy from the window. Select the draft entities and then press the middle mouse button; the window disappears and a plus sign gets attached to the cursor indicating that you need to select a point on the Creo Parametric screen to insert the file. Select a point on the screen; the selected entities get inserted and are displayed within an enclosed boundary. Also, the **Import/Drawing** tab will be invoked. You can use this tab to set the position, scale, and orientation of the imported sketch. Note that if the *.drw* file does not consist of draft entities, no data will be imported.

Evaluation Copy. Do not reproduce. For information visit www.cadcim.com

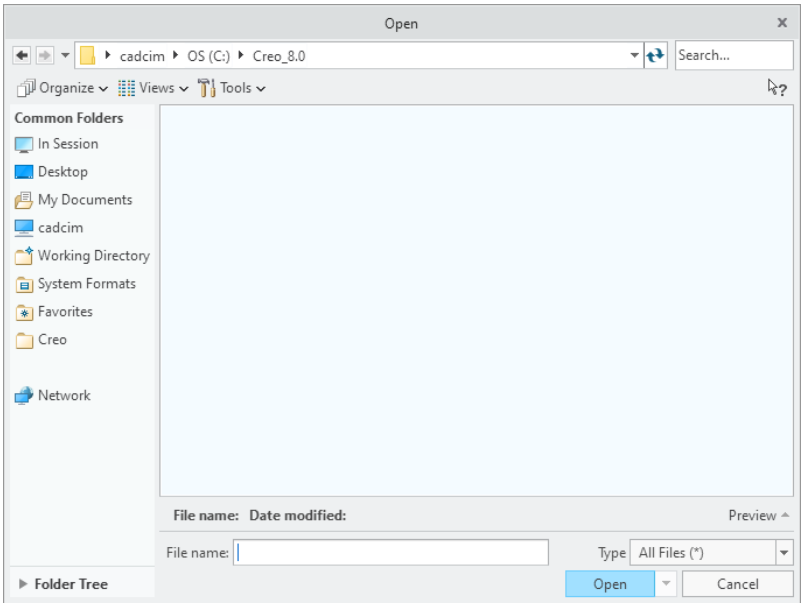

Figure 3-29 *The* ***Open*** *dialog box*

The section imported using the **File System** button in the current sketch is an independent copy. The imported section will be no longer associated with the source section. The units, dimensions, grid parameters, and accuracy are acquired from the current sketch.

TUTORIALS

Tutorial 1

In this tutorial, you will import an existing sketch that you had drawn in Tutorial 3 of Chapter 2. After placing the sketch, draw the keyway, as shown in Figure 3-30.

(Expected time: 15 min)

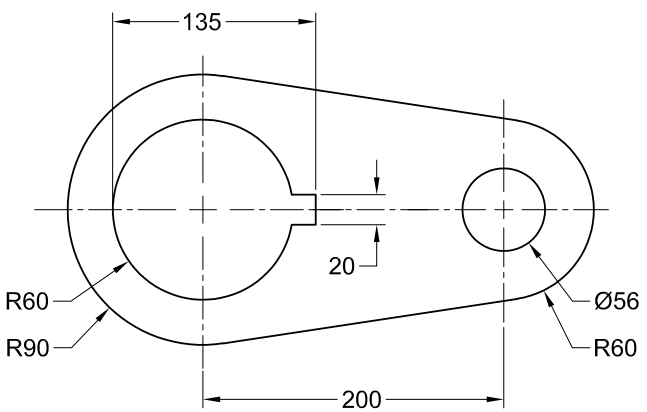

Figure 3-30 *Sketch for Tutorial 1*

Evaluation Copy. Do not reproduce. For information visit www.cadcim.com

The following steps are required to complete this tutorial:

a. Start Creo Parametric.
b. Set the working directory and create a new object file.
c. Import the section by using the **File System** button.
d. Draw the keyway and dimension it.
e. Modify the dimensions.
f. Save the sketch and exit the sketcher environment.

Starting Creo Parametric

1. Start Creo Parametric by double-clicking on the Creo Parametric icon on the desktop of your computer.

Setting the Working Directory

When the Creo Parametric session starts, the first task is to set the working directory. As mentioned earlier, working directory is a directory on your system where you can save the work done in the current session of Creo Parametric. You can set any existing directory on your system as the working directory. Since this is the first tutorial of this chapter, you need to create a folder named *c03* in the *C:\Creo_8.0* folder.

1. Choose **Manage Session > Select Working Directory** option from the **File** menu; the **Select Working Directory** dialog box is displayed.

2. Select *C:>Creo_8.0*. If this folder does not exist, then first create it and then set the working directory.

   Alternatively, you can use the **Folder Tree** available on the bottom left corner of the screen to set the working directory. To do so, click on the **Folder Tree** node; the Folder Tree will expand. In the Folder Tree, browse to the desired location using the nodes corresponding to the folders and select the required folder. After selecting the folder, the **Folder Content** window will be displayed. Close this window and the selected folder will become your current working directory.

3. Choose the **Organize** button from the **Select Working Directory** dialog box or right-click in this dialog box to display a shortcut menu. From the shortcut menu, choose the **New Folder** option; the **New Folder** dialog box is displayed.

4. Enter **c03** in the **New directory** edit box of the **New Folder** dialog box and then choose the **OK** button; a folder with the name *c03* is created at *C:\Creo_8.0*.

5. Choose the **OK** button from the **Select Working Directory** dialog box; *C:\Creo_8.0\c03* is set as the working directory.

Starting a New Object File

1. Choose the **New** button from the **Data** group; the **New** dialog box is displayed. Select the **Sketch** radio button from the **Type** area of the **New** dialog box; the default name of the sketch appears in the **File name** edit box.

Evaluation Copy. Do not reproduce. For information visit www.cadcim.com

2. Enter *c03tut1* in the **File name** edit box and choose the **OK** button.

You are in the sketcher environment of the **Sketch** mode. When you enter the sketcher environment, the Navigator is displayed on the left in the graphics window. Slide-in the Navigator by clicking on the **Show Navigator** button present on the bottom left corner of the drawing area. Now, the drawing area is increased.

Importing the Section

1. Choose **Get Data > File System** from the **Ribbon**; the **Open** dialog box is displayed with the working directory as the current directory.

2. Click on the black arrow beside the **Creo_8.0** option in the address bar and choose **c02** from the flyout displayed. Make sure the **Sketch (*.sec)** option is selected in the **Type** drop-down list. Select *c02tut3.sec* and choose the **Open** button from the **Open** dialog box.

3. Move the cursor in the drawing area. Notice that the cursor is attached with a plus sign. Now, click anywhere in the drawing area to place the sketch. The sketch is displayed in the drawing area and the **Import Section** tab is displayed in the **Ribbon**.

4. Enter **1** as a scale factor in the scale edit box and choose the **OK** button to complete importing the sketch.

5. Choose the **Refit** button from the **Graphics** toolbar. The sketch, similar to the one shown in Figure 3-31, is displayed in the drawing area.

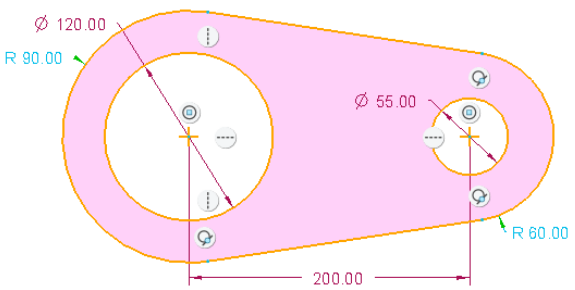

Figure 3-31 *Sketch imported and placed in the current file*

Drawing the Keyway

To create the keyway, you need to sketch a small rectangle and then remove the portion of the circle that lies between the rectangle.

1. Choose the **Line Chain** tool from the **Line** drop-down in the **Sketching** group.

2. Draw the keyway, as shown in Figure 3-32; the weak dimensions and constraints are automatically applied to the sketch of the keyway.

Evaluation Copy. Do not reproduce. For information visit www.cadcim.com

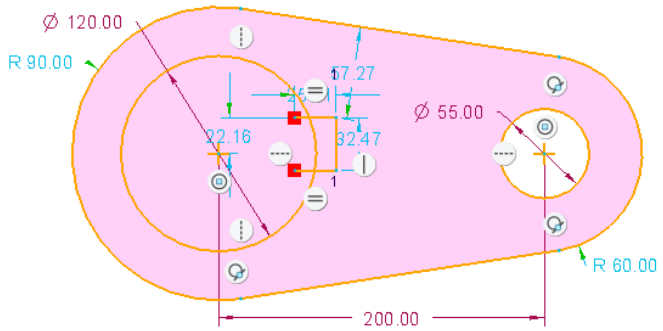

Figure 3-32 *Sketch of the keyway with weak dimensions and constraints*

The horizontal lines of the keyway and the circle intersect at the points where the lines meet the circle. The portion of the circle that lies between the two horizontal lines of the keyway needs to be deleted from the circle.

3. Choose the **Zoom In** button from the **Orientation** group of the **View** tab; the cursor is converted into a magnifying glass symbol.

4. Draw a window around the keyway to zoom in it. Now, the display of the keyway is enlarged.

5. Choose the **Delete Segment** tool from the **Editing** group.

6. Click to select the part of the circle that lies between the two horizontal lines; the selected part is deleted.

7. Choose the **Refit** button from the **Graphics** toolbar to view the full sketch.

Dimensioning the Keyway

Now, you need to apply dimensions to the keyway.

1. Choose the **Dimension** tool from the **Dimension** group.



2. Dimension the keyway, as shown in Figure 3-33.

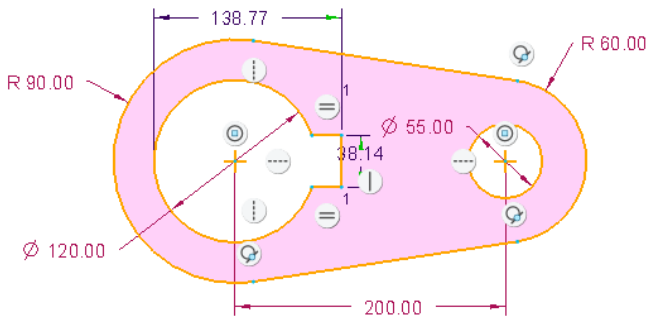

Figure 3-33 *Sketch after dimensioning the keyway*

Evaluation Copy. Do not reproduce. For information visit www.cadcim.com

Modifying the Dimensions

The dimensions of the keyway need to be modified as per the given dimension values.

1. Select the two dimensions of the keyway by pressing CTRL+left mouse button.

2. Choose the **Modify** tool from the **Editing** group; the **Modify Dimensions** dialog box is displayed.

3. Clear the **Regenerate** check box and then modify the dimensions of the keyway. When you clear the check box, the sketch does not regenerate as you modify the dimensions.

   The dimension that you edit in the **Modify Dimensions** dialog box gets enclosed in a violet box in the sketch.

4. Modify all dimensions. Refer to Figure 3-30 for dimension values.

5. After the dimensions are modified, choose the **OK** button from the **Modify Dimensions** dialog box; the message **Dimension modifications successfully completed** is displayed in the message area.

   The sketch after modifying the dimension values of the sketch is shown in Figure 3-34.

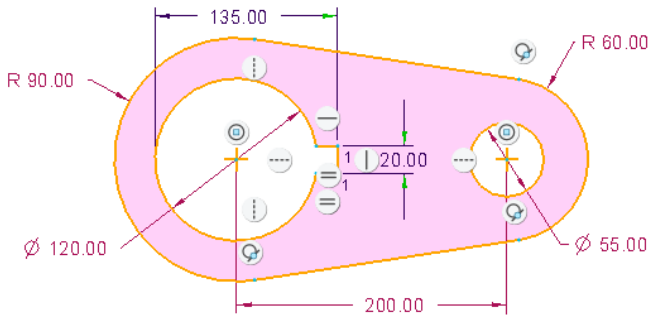

Figure 3-34 *Sketch after modifying the dimensions*

Saving the Sketch

As you may need the sketch later, you must save it.

1. Choose the **Save** button from the **File** menu; the **Save Object** dialog box is displayed with the name of the sketch entered earlier.

2. Choose the **OK** button; the sketch is saved.

3. After saving the sketch, choose the **Close** button from the **Quick Access** toolbar to exit the **Sketch** mode.

Evaluation Copy. Do not reproduce. For information visit www.cadcim.com

Tutorial 2

In this tutorial, you will draw the sketch for the model shown in Figure 3-35. The sketch is shown in Figure 3-36. **(Expected time: 30 min)**

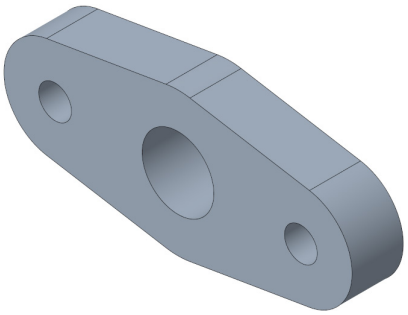

Figure 3-35 *Model for Tutorial 2*

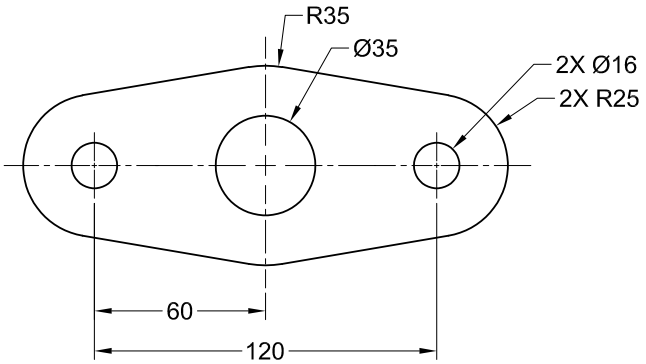

Figure 3-36 *Sketch of the model*

The following steps are required to complete this tutorial:

a. Set the working directory and create a new object file.
b. Draw the sketch using sketcher tools.
c. Apply the required constraints and dimensions to the sketched entities.
d. Modify the dimensions of the sketch.
e. Save the sketch and exit the **Sketch** mode.

Setting the Working Directory

The working directory was selected in Tutorial 1, and therefore there is no need to select the working directory again. But if a new session of Creo Parametric is started, then you need to set the working directory again by following the steps given next.

1. Open the Navigator by choosing the **Show Navigator** button on the bottom left corner of the Creo Parametric screen; the Navigator slides out. In the Navigator, the **Folder Tree** is displayed at the bottom. Click on the black arrow available on the left of the **Folder Tree**; the **Folder Tree** expands.

2. Click on the node adjacent to the **Creo_8.0** folder in the Navigator; the contents of the **Creo_8.0** folder are displayed.

3. Now, right-click on the *c03* folder to display a shortcut menu. From this shortcut menu, choose the **Set Working Directory** option; *c03* is set as the working directory.

4. Hide the Navigator by clicking on the **Show Navigator** button on the bottom-left of the Status Bar.

Starting a New Object File

1. Start a new object file in the **Sketch** mode. Name the file as *c03tut2*.

Evaluation Copy. Do not reproduce. For information visit www.cadcim.com

Drawing the Sketch

To draw the outer loop, you need to draw three circles and then draw lines tangent to them.

1. Choose the **Center and Point** tool from the **Circle** drop-down. Draw the circles in a horizontal line, as shown in Figure 3-37.

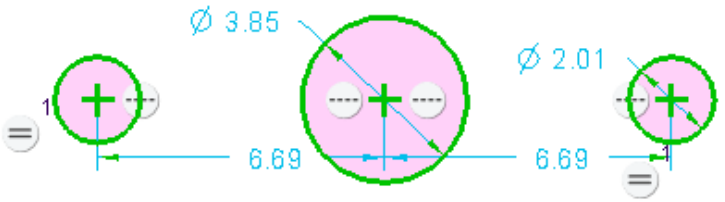

Figure 3-37 *Three circles with weak dimensions and constraints*

2. Choose the **Line Tangent** tool from the **Line** drop-down in the **Sketching** group.

3. Select the left and middle circles on their respective top points; a tangent is drawn from the top of the left circle to the top of the middle circle.

4. Next, select the right and middle circles on their respective top points; a tangent is drawn from the top of the right circle to the top of the middle circle.

5. Similarly, using the **Line Tangent** tool, draw the other tangents through the bottom-most points of the left, middle, and right circles, as shown in Figure 3-38.

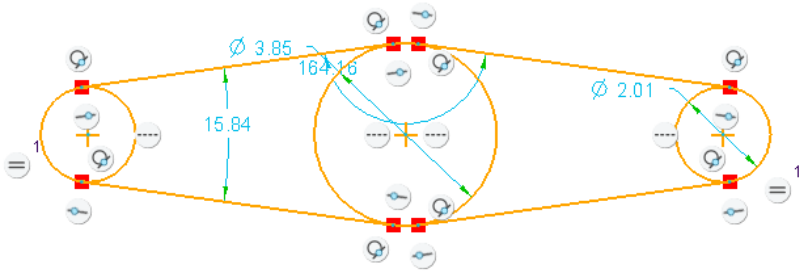

Figure 3-38 *Tangent lines drawn on the circles*

Trimming the Circles

The inner portions of the circles are not required. Therefore, you need to trim them.

1. Choose the **Delete Segment** tool from the **Editing** group.

2. Move the cursor close to the right portion of the left circle; the right part of the circle turns green in color. Next, click on it to delete it.

3. Similarly, trim the parts of the middle and right circles that are not required. The sketch after trimming the circles is shown in Figure 3-39.

Evaluation Copy. Do not reproduce. For information visit www.cadcim.com

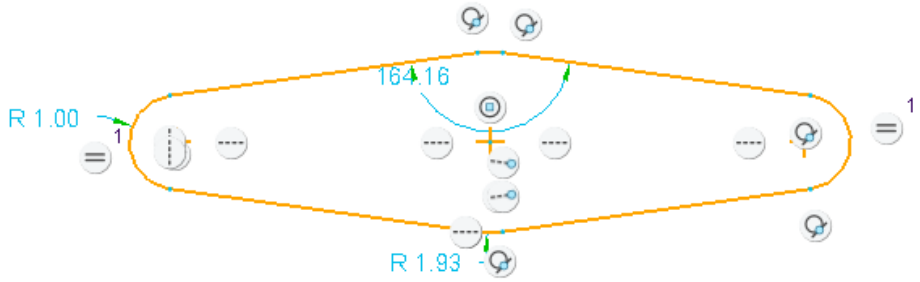

Figure 3-39 *Sketch after trimming the circles*

Drawing the Circles

1. Choose the **Concentric** tool from the **Circle** drop-down in the **Sketching** group; you are prompted to select an arc.

2. Click on the left arc and move the mouse; a circle appears. Select a point inside the sketch to complete the circle. Press the middle mouse button.

Tip

While drawing a concentric circle, sometimes the circle snaps to the other circle or arc and it becomes difficult to draw a circle of the size you need. In such a case, you can disable the snapping of the circle to the other circle or arc. To do so, hold the SHIFT key to disable the snapping or to disable the equal radii constraint that the system tends to apply while drawing the circle.

Note

You may need to zoom in the drawing to select the top arc in the next step.

3. Click on the top arc and move the mouse; a circle appears. Select a point inside the sketch to complete the circle. Press the middle mouse button to end the creation of circle.

4. Click on the right arc and move the mouse; a circle appears. Select a point inside the sketch to complete the circle. Press the middle mouse button to end the creation of circle.

The sketch after drawing all three circles is shown in Figure 3-40.

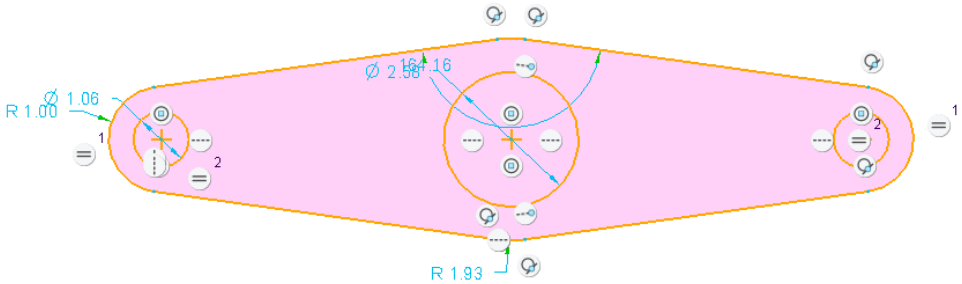

Figure 3-40 *Sketch after drawing all three circles*

Applying the Constraints

1. Choose the **Equal** tool from the **Constrain** group.

Evaluation Copy. Do not reproduce. For information visit www.cadcim.com

2. Select the left arc and then select the right arc to apply the equal radius constraint.

3. Select the left circle and the right circle to apply the equal radius constraint.

4. Choose the **Parallel** tool from the **Constrain** group.

5. Click to select the tangent line that connects the left arc and the middle arc at the top and then click to select the tangent line that connects the right arc and the middle arc at the bottom. It is evident from the parallel constraint symbol that the parallel constraint has been applied to the two tangent lines in the sketch.

Dimensioning the Sketch

Creo Parametric applies weak dimensions to the sketch automatically. These dimensions are not the needed dimensions because these dimensions do not help in machining the model. Therefore, you need to dimension the sketch with the dimensions that will be used to machine the model. To do so, follow the steps given next.

1. Choose the **Dimension** tool from the **Dimension** group.

2. Select the center of the right and left circles; the centers of the circles turn black in color. Now, using the middle mouse button, place the dimension below the sketch. The sketch after applying constraints is shown in Figure 3-41.

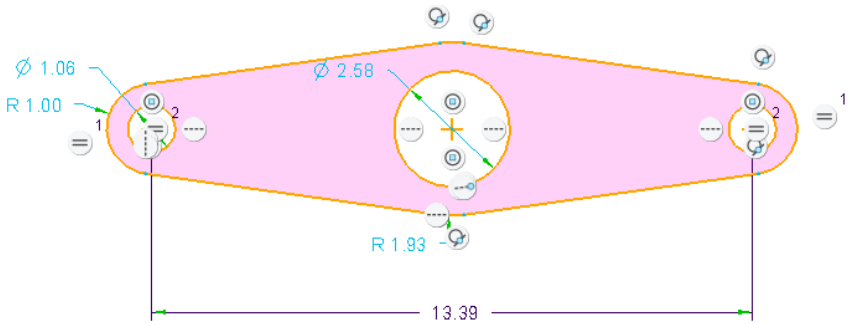

Figure 3-41 *Sketch with constraints*

The rest of the weak dimensions are the needed dimensions.

Modifying the Dimensions

All constraints and dimensions have been applied to the sketch. Now, you need to modify the dimensions.

1. Select all dimensions using the CTRL+ALT+A keys.

2. Choose the **Modify** tool from the **Editing** group; the **Modify Dimensions** dialog box is displayed.

3. Clear the **Regenerate** check box and then modify the values of the dimensions, refer to Figure 3-36 for dimension values.

Evaluation Copy. Do not reproduce. For information visit www.cadcim.com

When you clear the check box, the sketch does not regenerate while modifying the dimensions. The dimension that you edit in the **Modify Dimensions** dialog box is enclosed in a blue box in the sketch.

4. After the dimensions are modified, choose the **OK (Regenerate the section and close the dialog)** button from the **Modify Dimensions** dialog box; the message **Dimension modifications successfully completed** is displayed in the message area.

The sketch after modifying the dimension values is shown in Figure 3-42.

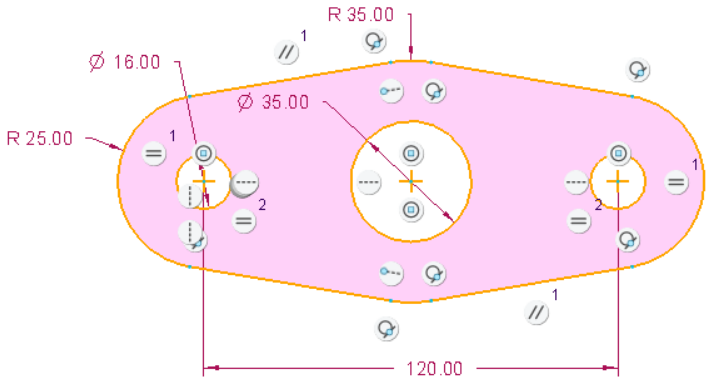

Figure 3-42 *Sketch after modifying the dimensions*

Saving the Sketch

1. Choose the **Save** button from the **File** menu and save the sketch.

Exiting the Sketch Mode

1. Choose the **Close** button from the **Quick Access** toolbar to exit the sketch.

Tutorial 3

In this tutorial, you will draw the sketch of the model shown in Figure 3-43. The sketch is shown in Figure 3-44. **(Expected time: 30 min)**

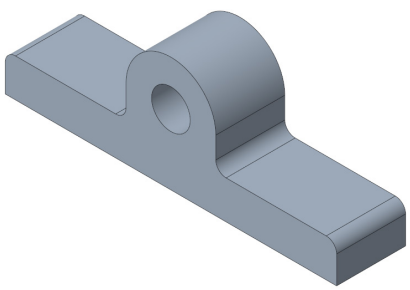

Figure 3-43 *Model for Tutorial 3*

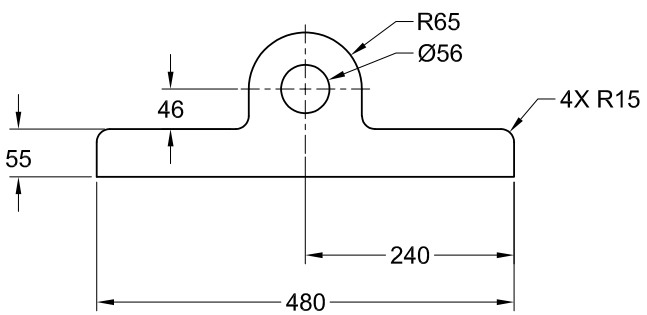

Figure 3-44 *Sketch of the model*

Evaluation Copy. Do not reproduce. For information visit www.cadcim.com

The following steps are required to complete this tutorial:

a. Set the working directory and create a new object file.
b. Draw the sketch using sketcher tools.
c. Apply fillets at two corners of the sketch.
d. Dimension the sketch.
e. Modify dimensions of the sketch.
f. Save the sketch and exit the **Sketch** mode.

Setting the Working Directory

The working directory was selected in Tutorial 1, and therefore there is no need to select the working directory again. But if a new session of Creo Parametric start, then you have to set the working directory again by following the steps given next.

1. Open the Navigator by clicking on the **Show Navigator** button in the left edge of the Creo Parametric window; the Navigator slides out. In the Navigator, the Folder Tree is displayed at the bottom. Click on the black arrow that is available at the left-side of the Folder Tree to expand it.

2. Click on the node adjacent to the *Creo_8.0* folder in the Navigator to display the content of this folder.

3. Now, right-click on the *c03* folder to display a shortcut menu. From this shortcut menu, choose the **Set Working Directory** option; *c03* is set as the working directory.

4. Close the Navigator by clicking on the **Show Navigator** on the right edge of the Navigator; the Navigator slides in.

Starting a New Object File and Drawing the Sketch

1. Start a new object file in the **Sketch** mode. Name the file as *c03tut3*.

2. Choose the **Line Chain** tool from the **Line** drop-down of the **Sketching** group.

3. Draw the lines with constraints, as shown in Figure 3-45.

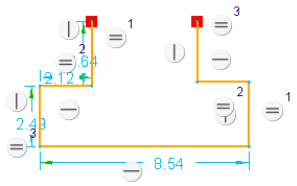

Figure 3-45 *Lines in the sketch with the dimensions turned off for clarity*

4. Choose the **3-Point / Tangent End** tool from the **Arc** drop-down available in the **Sketching** group.

5. Select the endpoint of the left vertical line as the start point of the arc. Complete the arc at the endpoint of the right vertical line.

Evaluation Copy. Do not reproduce. For information visit www.cadcim.com

6. Choose the **Concentric** tool from the **Circle** drop-down available in the **Sketching** group; you are prompted to select an arc.

7. Click on the arc; a rubber-band circle appears. Size the circle by moving the cursor and click to complete it. The sketch after drawing the circle is shown in Figure 3-46.

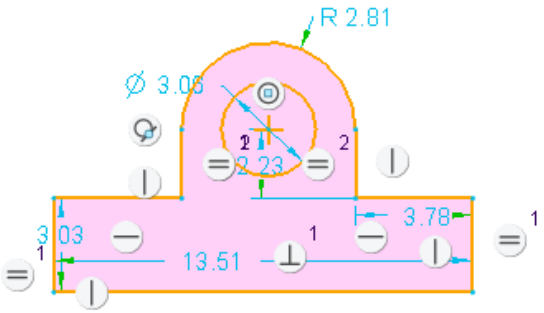

Figure 3-46 *Sketch after drawing the arc and the circle*

Note

*1. Choose the **Dimensions Display** button from the **Display** group in the **View** tab to turn the dimensions on or off.*

2. Creo Parametric does not have the options like midpoint, endpoint, or center of an arc or a circle. However, while drawing a sketch, these options are applied in the form of weak constraints. For example, while drawing an entity, the endpoint of the entity snaps to the cursor. The middle point constraint appears when you bring the cursor near to the middle point of the line to draw another line.

Filleting the Corners

1. Choose the **Circular Trim** option from the **Fillet** drop-down in the **Sketching** group; you are prompted to select the two entities to be filleted. The corners that you need to fillet are shown in Figure 3-47.

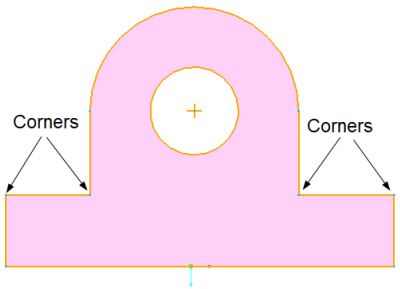

Figure 3-47 *Corners to be filleted*

2. Select the two entities one by one using the left mouse button to fillet the corners of these entities.

The sketch after creating the fillets is shown in Figure 3-48.

Evaluation Copy. Do not reproduce. For information visit www.cadcim.com

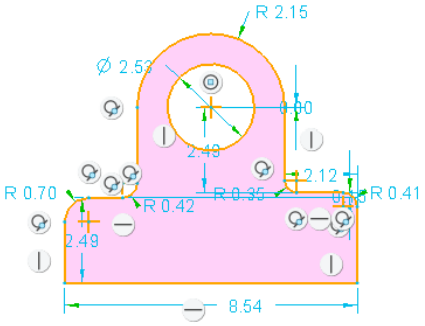

Figure 3-48 *Sketch after creating fillets*

Applying the Constraints

1. Choose the **Equal** tool from the **Constrain** group.

2. Click to select the fillets and apply the equal constraint to all fillets.

Dimensioning the Sketch

The weak dimensions are applied to the sketch automatically. These are not the required dimensions and therefore, you need to dimension the sketch manually.

1. Choose the **Dimension** tool from the **Dimension** group.

2. Dimension the sketch, as shown in Figure 3-49.

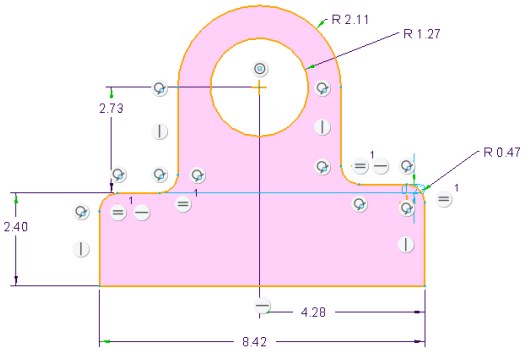

Figure 3-49 *Sketch after dimensioning*

Modifying the Dimensions

You need to modify the dimension values that are assigned to the sketch.

1. Select all dimensions using CTRL+ALT+A.

2. Choose the **Modify** tool from the **Editing** group; the **Modify Dimensions** dialog box is displayed.

Evaluation Copy. Do not reproduce. For information visit www.cadcim.com

3. Clear the **Regenerate** check box and then modify the values of the dimensions. If this check box is cleared, the sketch does not regenerate while modifying the dimensions.

   The dimension that you edit in the **Modify Dimensions** dialog box is enclosed in a violet box in the sketch.

4. Modify all dimensions. Refer to Figure 3-43 for dimension values.

5. Choose the **OK (Regenerate the section and close the dialog)** button from the **Modify Dimensions** dialog box.

   The sketch after modifying the dimension values is shown in Figure 3-50.

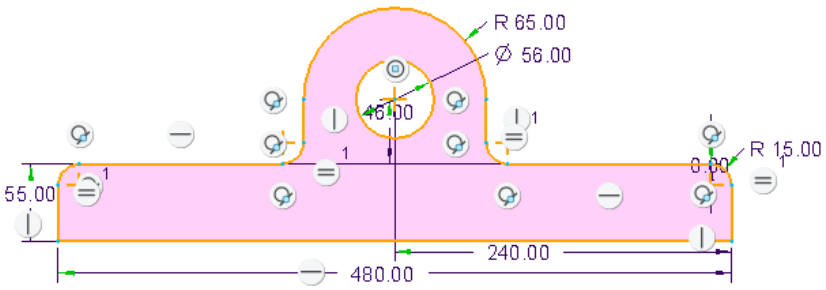

Figure 3-50 *Sketch after modifying the dimensions*

Saving the Sketch and Exiting the Sketch Mode

1. Choose the **Save** button from the **File** menu and save the sketch.

2. Choose the **Close** button from the **Quick Access** toolbar to exit the **Sketch** mode.

Self-Evaluation Test

Answer the following questions and then compare them to those given at the end of this chapter:

1. The _____ dialog box is used to modify dimensions.

2. The display of dimensions and constraints can be turned on/off by choosing the _____ and _____ buttons respectively from the **Display** group.

3. The _____ tool is used to rotate selected entities.

4. You can delete entities by selecting them and then using the _____ key on the keyboard.

5. The shape of a spline can be modified dynamically. (T/F)

Evaluation Copy. Do not reproduce. For information visit www.cadcim.com

6. You can increase the length of the spline by adding points before the start point and after the endpoint of the spline. (T/F)

7. You can modify the dimensions dynamically. (T/F)

8. When you modify a weak dimension, it becomes strong. (T/F)

9. You can dimension the length of a centerline. (T/F)

10. The font of the text written in the sketcher environment cannot be modified. (T/F)

Review Questions

Answer the following questions:

1. How many handles are displayed in the graphics window while rotating and resizing entities?

(a) one (b) two
(c) three (d) four

2. Which of the following mouse buttons is used to place the dimension?

(a) left (b) middle
(c) right (d) mouse is not used for dimensioning

3. Which of the following is the default font for the text in the sketcher environment?

(a) font (b) filled
(c) font3d (d) isofont

4. Which of the following groups is used to toggle the display of dimensions and constraints in the sketcher environment?

(a) **Sketching** (b) **Constrain**
(c) **Display** (d) **Dimension**

5. In which type of dimensioning, the **Dim Orientation** dialog box is displayed while dimensioning the arcs and circles?

(a) **Normal** (b) **Perimeter**
(c) **Baseline** (d) None of the above

6. For placing a section in a new sketch, you can use the right mouse button. (T/F)

7. You can create elliptical fillets in Creo Parametric. (T/F)

8. While creating text in the sketcher environment, you need to draw a line that will define the height of the text. (T/F)

Evaluation Copy. Do not reproduce. For information visit www.cadcim.com

9. While copying the sketched entities, the **Paste** tab is also displayed. (T/F)

10. You can modify a spline by moving its interpolation points. (T/F)

EXERCISES

Exercise 1

In this exercise, you will draw the sketch of the model shown in Figure 3-51. The sketch to be drawn is shown in Figure 3-52. **(Expected time: 30 min)**

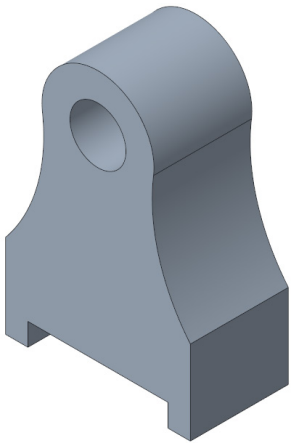

Figure 3-51 *Solid model for Exercise 1*

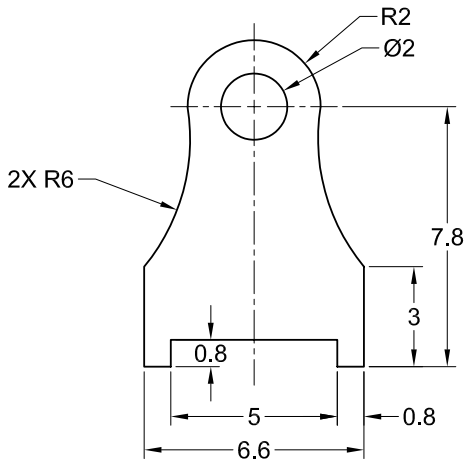

Figure 3-52 *Sketch of the model*

Exercise 2

In this exercise, you will draw the sketch of the model shown in Figure 3-53. The sketch to be drawn is shown in Figure 3-54. **(Expected time: 15 min)**

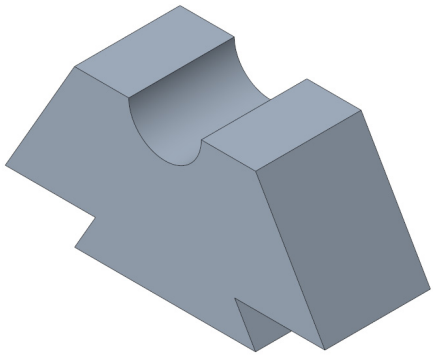

Figure 3-53 *Solid model for Exercise 2*

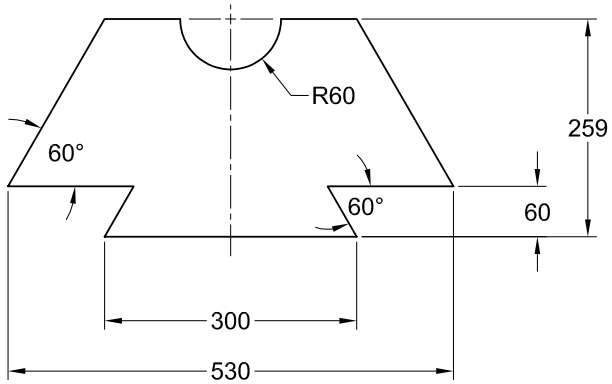

Figure 3-54 *Sketch of the model*

Evaluation Copy. Do not reproduce. For information visit www.cadcim.com

Exercise 3

In this exercise, you will draw the sketch of the model shown in Figure 3-55. The sketch to be drawn is shown in Figure 3-56. **(Expected time: 30 min)**

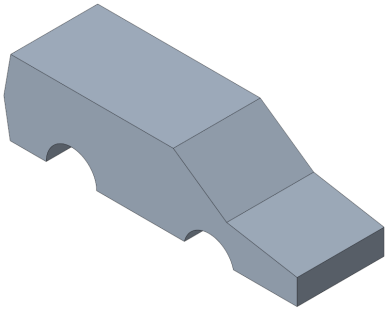

Figure 3-55 *Solid model for Exercise 3*

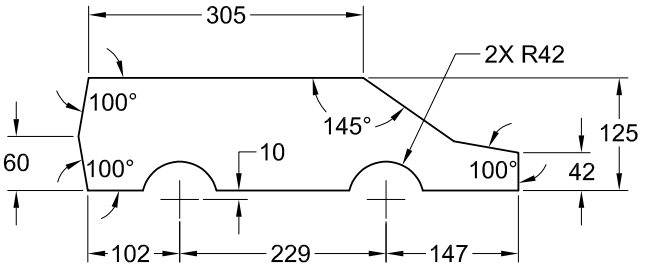

Figure 3-56 *Sketch of the model*

Evaluation Copy. Do not reproduce. For information visit www.cadcim.com

Answers to Self-Evaluation Test

1. Modify Dimensions, **2. Dimensions Display**, **Constraints Display**, **3. Rotate Resize**, **4.** DELETE, **5.** T, **6.** F, **7.** T, **8.** T, **9.** F, **10.** F