Chapter 2

Getting Started with AutoCAD

Learning Objectives

After completing this chapter, you will be able to:

- *Draw lines by using the Line tool*
- *Understand the coordinate systems used in AutoCAD*
- *Clear the drawing area by using the Erase tool*
- *Understand the two basic object selection methods: Window selection and Crossing selection methods*
- *Draw circles by using various tools*
- *Use the Zoom and Pan tools*
- *Set up units by using the Units tool*
- *Set up and determine limits for a given drawing*
- *Plot drawings by using the basic plotting options*
- *Use the Options dialog box and specify settings*

Key Terms

- *Dynamic Input*
- *Line*
- *Coordinate Systems*
- *Absolute Coordinate System*
- *Relative Coordinate System*
- *Direct Distance Entry*
- *Erase*
- *Object Selection*
- *Circle*
- *Zoom*
- *Pan*
- *Units Format*
- *Limits*
- *Plot*
- *Options*

DYNAMIC INPUT MODE

In AutoCAD, the Dynamic Input mode allows you to enter the commands through the pointer input and the dimensions using the dimensional input. You can turn ON/OFF the Dynamic Input mode by using the **Dynamic Input** button available in the Status Bar (Customize to Add). When you start AutoCAD for the first time, the Dynamic Input mode is active, as the **Dynamic Input** button is chosen by default in the Status Bar. With this mode turned on, all the prompts are available at the tooltip as dynamic prompts and you can select the command options through the dynamic prompt. The settings for the Dynamic Input mode are done through the **Dynamic Input** tab of the **Drafting Settings** dialog box. To invoke the **Drafting Settings** dialog box, right-click on the **Dynamic Input** button in the Status Bar; a shortcut menu will be displayed. Choose the **Dynamic Input Settings** option from the shortcut menu; the **Drafting Settings** dialog box will be displayed, as shown in Figure 2-1. The options in the **Dynamic Input** tab are discussed next.

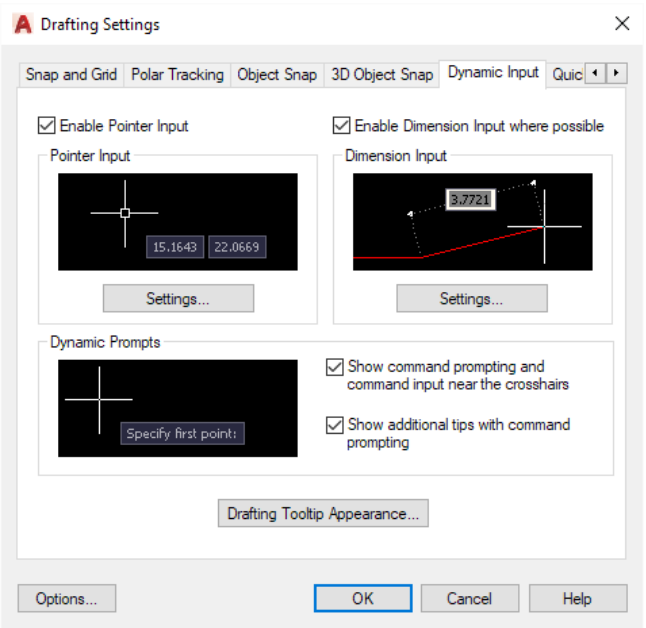

Figure 2-1 *The* ***Dynamic Input*** *tab of the* ***Drafting Settings*** *dialog box*

Note

If the ***Dynamic Input*** *button is not available in the Status Bar, then you can customize it using the* ***Customization*** *button which is available at the right corner of the Status Bar.*

Enable Pointer Input

The **Enable Pointer Input** check box is selected by default which enables you to enter the commands through the pointer input. Figure 2-2 shows the **CIRCLE** command entered through the pointer input. If this check box is cleared, the Dynamic Input will be turned off and commands have to be entered through the command

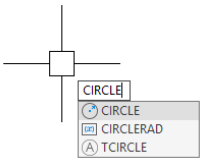

Figure 2-2 *Entering a command using the pointer input*

Evaluation Copy. Do not reproduce. For information visit www.cadcim.com

prompt. If you enter any alphabet in the Dynamic Input prompt, all tools whose names start with the entered alphabet will be displayed in a list at the pointer, refer to Figure 2-2.

If you choose the **Settings** button from the **Pointer Input** area, the **Pointer Input Settings** dialog box will be displayed, as shown in Figure 2-3. The radio buttons in the **Format** area of this dialog box are used to set the default settings as either Polar or Cartesian format for specifying the second or next points of entities. By default, the **Polar format** and **Relative coordinates** radio buttons are selected. As a result, the coordinates will be specified in the polar form and with respect to the relative coordinates system. You can select the **Cartesian format** radio button to enter the coordinates in Cartesian form. Similarly, if you select the **Absolute coordinates** radio button, the coordinate's values will be measured with respect to the absolute coordinate system.

The options in the **Visibility** area of the **Pointer Input Settings** dialog box are used to set the visibility of the coordinate tool tips. By default, the **When a command asks for a point** radio button is selected. You can select the other radio buttons to modify this display.

Enable Dimension Input where possible

The **Enable Dimension Input where possible** check box is selected by default. As a result, the dimension input field is displayed in the graphics area showing a preview of that dimension. Figure 2-4 displays the dimension input fields. The options under the Dynamic prompt will be available when you press the down arrow key from the keyboard. The dotted lines show the geometric parameters like length, radius, or diameter corresponding to that dimension. Figure 2-4 shows a line being drawn using the **PLINE** command. The two dimension inputs that are shown are for the length of the line and the angle with the positive direction of the X axis.

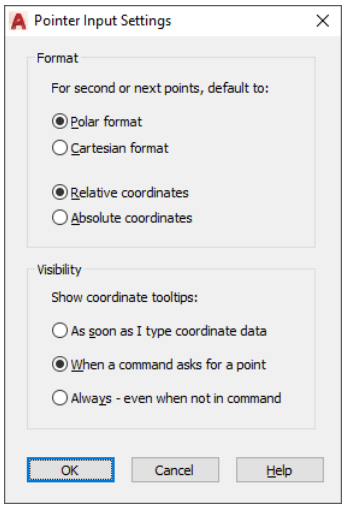

Figure 2-3 *The* ***Pointer Input Settings*** *dialog box*

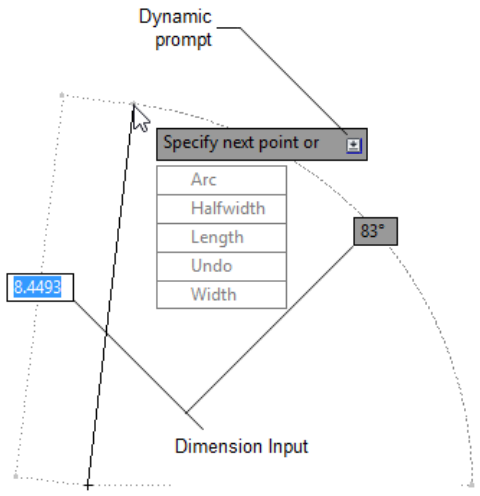

Figure 2-4 *Input fields displayed when the* ***Enable Dimension Input where possible*** *check box is selected*

Using the TAB key, you can toggle between the dimension input fields. As soon as you specify one dimension and move to the other, the previous dimension will be locked. If the **Enable**

Evaluation Copy. Do not reproduce. For information visit www.cadcim.com

Dimension Input where possible check box is cleared, the preview of dimensions will not be displayed. You can only enter the dimensions in the dimension input fields below the cursor, as shown in Figure 2-5. If you choose the **Settings** button from the **Dimension Input** area; the **Dimension Input Settings** dialog box will be displayed, as shown in Figure 2-6.

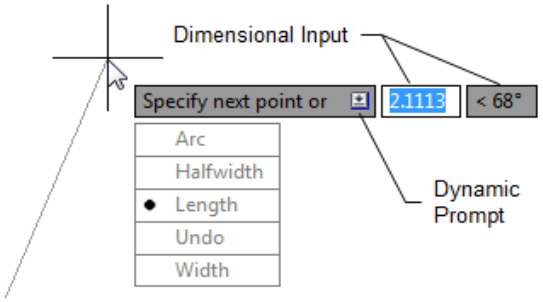

Figure 2-5 *Input fields displayed when the* ***Enable Dimension Input where possible*** *check box is cleared*

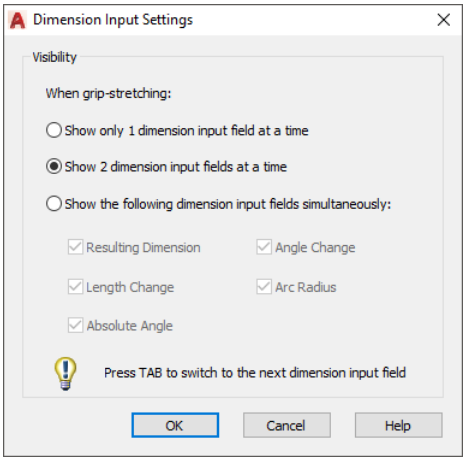

Figure 2-6 *The* ***Dimension Input Settings*** *dialog box*

By default, the **Show 2 dimension input fields at a time** radio button is selected. As a result, two dimension input fields will be displayed in the drawing area while stretching a sketched entity. The two input fields will depend on the entity that is being stretched. For example, if you stretch a line using one of its endpoints, the input field will show the total length of the line and the change in its length. Similarly, while stretching a circle using the grip on its circumference, the input fields will show the total radius and the change in the radius. You can set the priority to display only one input field or various input fields simultaneously by selecting their respective check boxes.



Tip

If multiple dimension input fields are available, use the TAB key to switch between the dimension input fields.

Evaluation Copy. Do not reproduce. For information visit www.cadcim.com

Show command prompting and command input near the crosshairs

This check box is selected by default. As a result, the prompt sequences will be dynamically displayed near the crosshairs. Whenever a black arrow appears at the pointer input, it suggests that the other options are also available. To access these options, press the down arrow key to see the dynamic prompt listing all options. In the dynamic prompt, you can use the cursor or the down arrow key to jog through the options. A black dot will appear before the option that is currently active. In Figure 2-5, the **Length** option is currently active. Press ENTER to confirm the polyline creation using the **Length** option.

Show additional tips with command prompting

In AutoCAD, on selecting the **Show additional tips with command prompting** check box available in the **Dynamic Input** tab of the **Drafting Settings** dialog box, refer to Figure 2-1, the display of tips for the grip manipulation will be turned on.

Drafting Tooltip Appearance

When you choose the **Drafting Tooltip Appearance** button, the **Tooltip Appearance** dialog box will be displayed, as shown in Figure 2-7. This dialog box contains the options to customize the tooltip appearance.

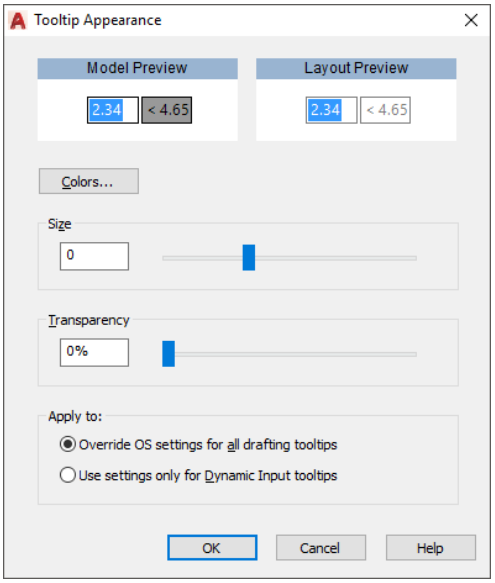

Figure 2-7 *The* ***Tooltip Appearance*** *dialog box*

You can choose the **Colors** button to change the color of the tooltip in the model space or layouts. The edit box in the **Size** area is used to specify the size of the tooltip. You can also use the slider to control the size of the tool tip. Previews are displayed in the **Model Preview** and the **Layout Preview** areas as the value is changed in the **Size** edit box.

Similarly, the transparency of the tooltip can be controlled using the edit box or the slider in the **Transparency** area. In the **Apply to** area, the **Override OS settings for all drafting tooltips** radio button is selected by default which ensures that the changes made in the **Tooltip Appearance** dialog box will be applied to all drafting tooltips. If you select the **Use settings only for Dynamic Input tooltips** radio button, the changes will be applied only to the **Dynamic Input** tooltips. For example, if you change any of the parameters using the **Tooltip Appearance** dialog box and select the **Use settings only for Dynamic Input tooltips** radio button, the tooltips for the dynamic input will be modified but for the polar tracking it will consider the original values.

On the other hand, if you select the **Override OS settings for all drafting tooltips** radio button, the tooltips displayed for the polar tracking will also be modified based on the values in the **Tooltip Appearance** dialog box.

Evaluation Copy. Do not reproduce. For information visit www.cadcim.com

DRAWING LINES IN AutoCAD

Ribbon: Home > Draw > Line **Toolbar:** Draw > Line **Menu Bar:** Draw > Line
Tool Palettes: Draw > Line **Command:** LINE/L



The most commonly used fundamental object in a drawing is line. In AutoCAD, a line is drawn between two points by using the **Line** tool. You can invoke the **Line** tool from the **Draw** panel of the **Home** tab in the **Ribbon**, refer to Figure 2-8. Besides this, you can choose the **Line** tool from the **Draw** tab of the **Tool Palettes**. To invoke the **Tool Palettes**, choose the **Tool Palettes** button from the **Palettes** panel in the **View** tab, as shown in Figure 2-9. Alternatively, you can invoke the **Line** tool from the **Draw** toolbar, as shown in Figure 2-10. However, the **Draw** toolbar is not displayed by default. To invoke this toolbar, choose **Tools > Toolbars > AutoCAD > Draw** from the Menu Bar.

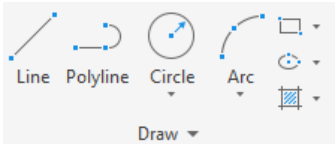

Figure 2-8 *The* ***Line*** *tool in the* ***Draw*** *panel*

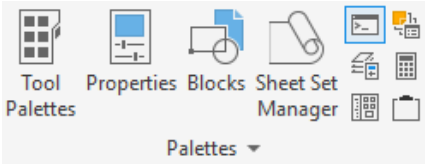

Figure 2-9 *Invoking the* ***Tool Palettes*** *from the* ***Palettes*** *panel*



Figure 2-10 *The* ***Line*** *tool in the* ***Draw*** *toolbar*

You can also invoke the **Line** tool by entering **LINE** or **L** (L is the alias for the **LINE** command) at the command prompt. On invoking the **Line** tool, you will be prompted to specify the starting point of the line. Specify a point by clicking the left mouse button in the drawing area or by entering its coordinates in the Dynamic Input fields or the command prompt. After specifying the first point, you will be prompted to specify the second point. Specify the second point; a line will be drawn, refer to Figure 2-11. You may continue specifying points and draw lines or terminate the **Line** tool by pressing ENTER, ESC, or SPACEBAR. You can also right-click to display the shortcut menu and then choose the **Enter** or **Cancel** option from it to exit the **Line** tool.

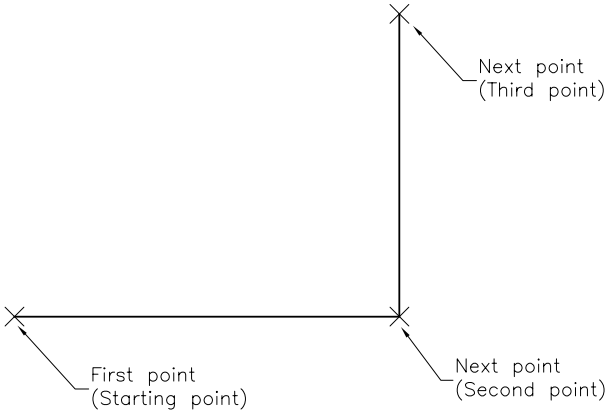

Figure 2-11 *Drawing lines using the* ***Line*** *tool*

Evaluation Copy. Do not reproduce. For information visit www.cadcim.com

To draw the sketch shown in Figure 2-11, start a new file with the ***acad.dwt*** template in the **Drafting & Annotation** workspace and choose the **Line** tool from the **Draw** tab. The prompt sequence for drawing the sketch is given next.

*Choose the **Line** tool*

Specify first point: *Move the cursor (mouse) and left-click to specify the first point.*

Specify next point or [Undo]: *Move the cursor horizontally toward the right and left-click to specify the second point.*

Specify next point or [Undo]: *Specify the third point.*

Specify next point or [Close/Undo]: Enter *(Press ENTER to exit the **Line** tool.)*



Note

When you specify start point of a line by pressing the left mouse button, a rubber band line stretches between the selected point and the current position of the cursor. This line is sensitive to the movement of the cursor and helps you select the direction and the placement of the next point for the line.

Note that in the command prompt, the **Close, Undo** options will be displayed while creating lines using the **Line** tool. These options are discussed next.

The Close Option

After drawing two continuous lines by using the **Line** tool, you will notice that the **Close** option is displayed at the command prompt. The **Close** option is used to join the current point to the start point of the first line when two or more continuous lines are drawn. If you specify the endpoint by using the mouse, then click at the start point of the first line or enter **C** at the command prompt, as given in the command prompt below.

*Choose the **Line** tool.*

LINE Specify first point: *Pick the first point.*

Specify next point or [Undo]: *Pick the second point.*

Specify next point or [Undo]: *Pick the third point.*

Specify next point or [Close/Undo]: *Pick the fourth point.*

Specify next point or [Close/Undo]: **C** Enter *(The fifth point joins with the first point).* Refer to *Figure 2-12*.

Evaluation Copy. Do not reproduce. For information visit www.cadcim.com

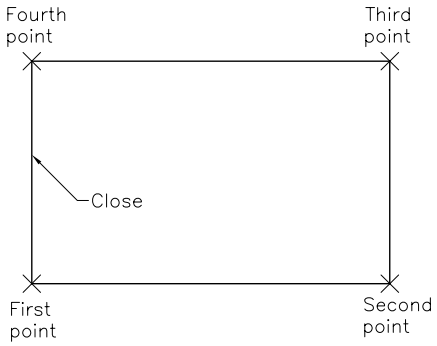

Figure 2-12 *Using the* ***Close*** *option of the* ***Line*** *tool*

You can also choose the **Close** option from the shortcut menu displayed on right-clicking in the drawing area.



Tip

After exiting the ***Line*** *tool, to draw another line starting from the endpoint of the previous line, press ENTER twice; a new line will start from the endpoint of the previous line. You can also type the @ symbol to start the line from the last point. For example, after drawing a circle if you invoke the* ***Line*** *tool, the @ symbol will snap to the center point of the circle.*

The Undo Option

While drawing a line if you specify a wrong endpoint, then you can undo the last specified point and go back to the previous stage by using the **Undo** option of the **Line** tool. You can use this option multiple times. To use this option, type **Undo** (or just **U**) at the **Specify next point or [Undo]** prompt. You can also right-click to display the shortcut menu and then choose the **Undo** option from it.



Note

Whenever you open a new drawing, you need to modify the drawing display area. To modify the display area, select the required tool from the ***Zoom*** *drop-down in the* ***Navigator Bar****; the drawing display is modified. You will learn more about the Zoom tools later in this chapter.*

Evaluation Copy. Do not reproduce. For information visit www.cadcim.com

INVOKING TOOLS USING DYNAMIC INPUT/COMMAND PROMPT

In AutoCAD if you enter any alphabet at the command prompt or Dynamic Input prompt, all the tools whose name start with the entered alphabet will be displayed in a list at the command prompt or Dynamic Input prompt. For example, if you enter **L** at the command prompt or Dynamic Input prompt, all the tools whose names start with the alphabet L will be displayed, refer to Figure 2-13. In this way, you can view all the tool names starting with a particular alphabet and select the required tool.



Figure 2-13 *List displayed after typing L at the command prompt*

COORDINATE SYSTEMS

In AutoCAD, the location of a point is specified in terms of Cartesian coordinates. In this system, each point in a plane is specified by a pair of numerical coordinates. To specify a point in a plane, take two mutually perpendicular lines as references. The horizontal line is called the *X* axis and the vertical line is called the *Y* axis. The *X* and *Y* axes divide the *XY* plane into four parts, generally known as quadrants. The point of intersection of these two axes is called the origin and the plane is called the XY plane. The origin has the coordinate values of X = 0, Y = 0. The origin is taken as the reference for locating a point on the *XY* plane. Now, to locate a point, say P, draw a vertical line intersecting the X axis. The horizontal distance between the origin and the intersection point will be called the X coordinate of P. It will be denoted as P(x). The *X* coordinate specifies how far the point is to the left or right from the origin along the *X* axis. Now, draw a horizontal line intersecting the Y axis. The vertical distance between the origin and the intersection point will be the Y coordinate of P. It will be denoted as P(y). The *Y* coordinate specifies how far the point is to the top or bottom from the origin along the *Y* axis. The intersection point of the horizontal and vertical lines is the coordinate of the point and is denoted as P(x,y). The *X* coordinate is positive if measured from the right of the origin and is negative if measured from the left of the origin. The *Y* coordinate is positive if measured above the origin and is negative if measured below the origin, refer to Figure 2-14.

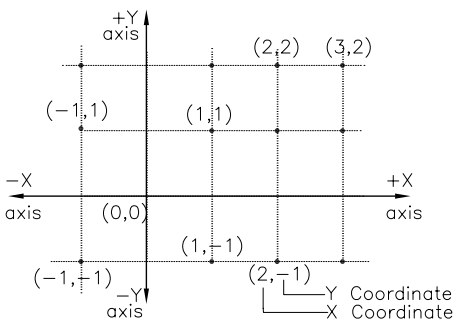

Figure 2-14 *Cartesian coordinate system*

In AutoCAD, the default origin is located at the lower left corner of the drawing area. AutoCAD uses the following coordinate systems to locate a point in the XY plane.

1. Absolute coordinate system
2. Relative coordinate system
    a. Relative rectangular coordinate system
    b. Relative polar coordinate system
3. Direct distance entry

Evaluation Copy. Do not reproduce. For information visit www.cadcim.com

If you are specifying a point by entering its location at the command prompt then you need to use any one of the coordinate systems.

Absolute Coordinate System

In the Absolute Coordinate System, points are located with respect to the origin (0,0). For example, a point with coordinates, X = 4 and Y = 3 is measured 4 units horizontally (distance along the *X* axis) and 3 units vertically (distance along the *Y* axis) from the origin, as shown in Figure 2-15. In AutoCAD, the absolute coordinates are specified at the command prompt by entering *X* and *Y* coordinates, separated by a comma. However, remember that if you are specifying the coordinates by using the Dynamic Input mode, you need to add # as the prefix to the X coordinate value. The following example illustrates the use of absolute coordinates at the command prompt to draw the rectangle shown in Figure 2-16.

*Choose the **Line** tool (Ensure that the **Dynamic Input** button is not chosen)*

LINE Specify first point: **1,1** Enter *(X = 1 and Y = 1.)*

Specify next point or [Undo]: **4,1** Enter *(X = 4 and Y = 1.)*

Specify next point or [Undo]: **4,3** Enter

Specify next point or [Close/Undo]: **1,3** Enter

Specify next point or [Close/Undo]: **C** Enter

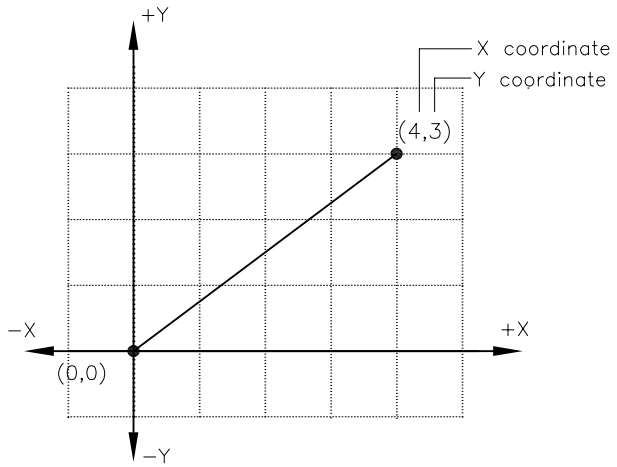

Figure 2-15 *Absolute Coordinate System*



Figure 2-16 *Rectangle created by using absolute coordinates*

Evaluation Copy. Do not reproduce. For information visit www.cadcim.com

Example 1 *Absolute Coordinate System*

Draw the profile shown in Figure 2-17 by using the Absolute Coordinate system. The absolute coordinates of the points are given in the table given below. Save the drawing with the name *Exam1.dwg*.

Point	Coordinates
1	3,1
2	3,6
3	4,6
4	4,2

Point	Coordinates
5	5,2
6	6,3
7	7,3
8	7,1

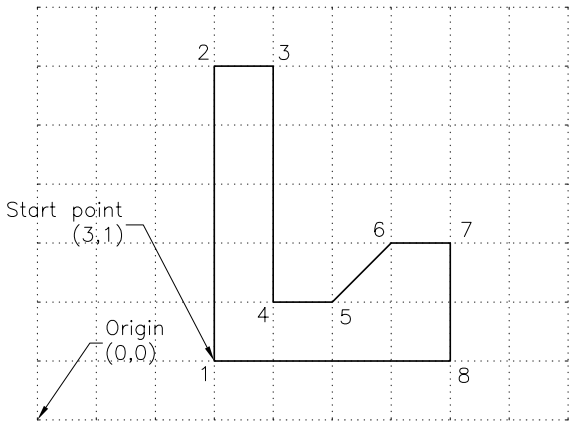

Figure 2-17 *Drawing a figure using the absolute coordinates*

Start a new file with the ***acad.dwt*** template in the **Drafting & Annotation** workspace. Once you know the coordinates of the points, you can draw the sketch by using the **Line** tool.

*Choose the **Zoom All** tool*

*Choose the **Line** tool*

The prompt sequence is given next.

LINE Specify first point: **3,1** Enter *(Start point.)*

Specify next point or [Undo]: **3,6** Enter

Specify next point or [Undo]: **4,6** Enter

Specify next point or [Close/Undo]: **4,2** Enter

Specify next point or [Close/Undo]: **5,2** Enter

Specify next point or [Close/Undo]: **6,3** Enter

Specify next point or [Close/Undo]: **7,3** Enter

Evaluation Copy. Do not reproduce. For information visit www.cadcim.com

Specify next point or [Close/Undo]: **7,1** Enter

Specify next point or [Close/Undo]: **C** Enter

Choose the **Save** tool from the **Quick Access Toolbar** to display the **Save Drawing As** dialog box. Enter **Exam1** in the **File name** edit box and then choose the **Save** button. The drawing will be saved with the specified name in the default *Documents* folder.

Exercise 1 — *Absolute Coordinate System*

Draw the profile shown in Figure 2-18. The distance between the dotted lines is 1 unit. Enter absolute coordinates of the points given in the following table. Then, use these coordinates to draw the same figure.

Point	Coordinates
1	2, 1
2	_____
3	_____
4	_____
5	_____

Point	Coordinates
6	_____
7	_____
8	_____
9	_____

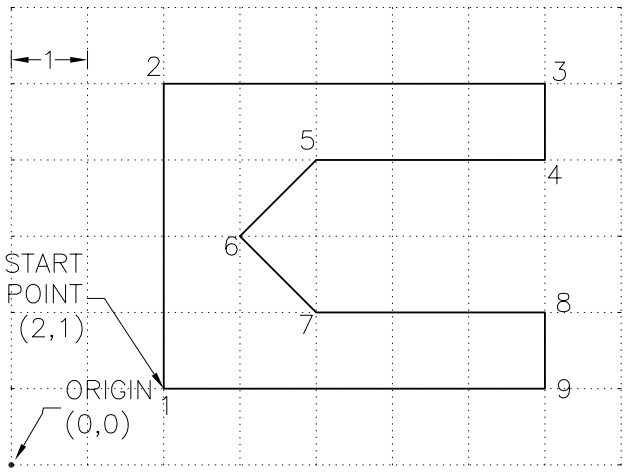

Figure 2-18 *Drawing for Exercise 1*

Relative Coordinate System

There are two types of relative coordinate system:

1. Relative Rectangular System
2. Relative Polar System

Evaluation Copy. Do not reproduce. For information visit www.cadcim.com

Relative Rectangular Coordinate System

In the Relative Rectangular Coordinate system, the location of a point is specified with respect to the previous point, not with respect to the origin. To enter coordinate values in terms of the Relative Rectangular Coordinate system, check whether the **Dynamic Input** is on or not. If the **Dynamic Input** is turned on, then by default the profile will be drawn using the Relative Rectangular Coordinate system. Therefore, in this case, enter the X coordinate, type comma (,), and then enter the Y coordinate. However, if the **Dynamic Input** is turned off, the coordinate values have to be prefixed by the @ symbol, so that the profile will be drawn using the Relative Rectangular Coordinate system. For example, to draw a rectangle of length 4 units and width 3 units and the lower left corner at the point (1,1) using the Relative Rectangular Coordinate system, refer to Figure 2-19, you need to use the following prompt sequence:

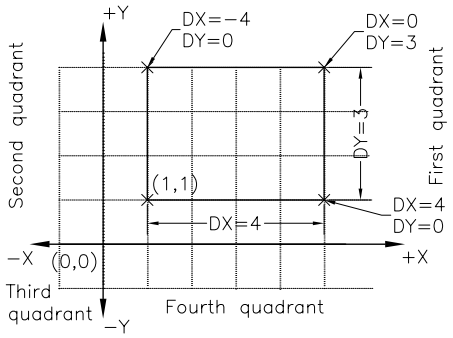

Figure 2-19 *Drawing lines using the relative rectangular coordinate*

*Choose the **Line** tool (make sure that the **Dynamic Input** is turned off)*

LINE Specify first point: **1,1** Enter *(Start point)*

Specify next point or [Undo]: **@4,0** Enter

Specify next point or [Undo]: **@0,3** Enter

Specify next point or [Close/Undo]:**@-4,0** Enter

Specify next point or [Close/Undo]: **@0,-3** Enter

Specify next point or [Close/Undo]: Enter

Remember that if the **Dynamic Input** is on, you need to use a comma (,) after entering the first value in the Dynamic Input boxes. Else, AutoCAD will take coordinates in relative polar form.

Sign Convention: As mentioned, in the Relative Rectangular Coordinate system, the distance along the X and Y axes is measured with respect to the previous point. To understand the sign convention, imagine a horizontal line and a vertical line passing through the previous points so that you get four quadrants. If the new point is located in the first quadrant, then both the distances (DX and DY) will be specified as positive values. If the new point is located in the third quadrant, then both the distances (DX and DY) will be specified as negative values. In other words, the point will have a positive coordinate values, if it is located above or right of an axis. Similarly, the point will have a negative coordinate value, if it is located below or left of the axis.

Evaluation Copy. Do not reproduce. For information visit www.cadcim.com

Example 2 *Relative Rectangular Coordinate*

Draw the profile shown in Figure 2-20 using Relative Rectangular Coordinates. The coordinates of the points are given in the table below.

Point	Coordinates	Point	Coordinates
1	3,1	8	-1,-1
2	4,0	9	-1,1
3	0,1	10	-1,0
4	-1,0	11	0,-2
5	1,1	12	1,-1
6	0,2	13	-1,0
7	-1,0	14	0,-1

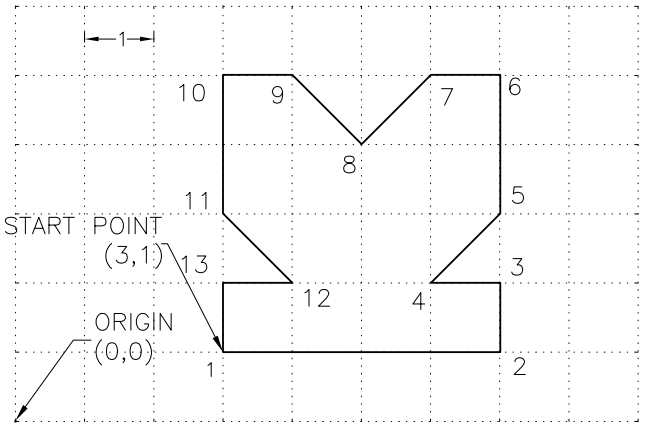

Figure 2-20 *Profile for Example 2*

Start a new file with the ***acad.dwt*** template in the **Drafting & Annotation** workspace. Before you proceed, you need to make sure that the **Dynamic Input** is turned on.

Choose the ***Zoom All*** tool

Next, *choose the* ***Line*** *tool*

LINE Specify first point: *Type* **3,1** *in the dynamic input boxes and press* Enter *(Start point)*

Specify next point or [Undo]: *Type* **4,0** *in the dynamic input boxes and press* Enter

Specify next point or [Undo]: *Type* **0,1** *in the dynamic input boxes and press* Enter

Specify next point or [Close/Undo]: *Type* **-1,0** *in the dynamic input boxes and press* Enter

Specify next point or [Close/Undo]: *Type* **1,1** *in the dynamic input boxes and press* Enter

Specify next point or [Close/Undo]: *Type* **0,2** *in the dynamic input boxes and press* Enter

Specify next point or [Close/Undo]: **-1,0** *and press* Enter

Evaluation Copy. Do not reproduce. For information visit www.cadcim.com

Specify next point or [Close/Undo]: **-1,-1** *and press* Enter
Specify next point or [Close/Undo]: **-1,1** *and press* Enter
Specify next point or [Close/Undo]: **-1,0** *and press* Enter
Specify next point or [Close/Undo]: **0,-2** *and press* Enter
Specify next point or [Close/Undo]: **1,-1** *and press* Enter
Specify next point or [Close/Undo]: **-1,0** *and press* Enter
Specify next point or [Close/Undo]: **0,-1** *and press* Enter
Specify next point or [Close/Undo]: Enter

Exercise 2 *Relative Rectangular Coordinate*

For Figure 2-21, enter the relative rectangular coordinates of the points in the table given below. Then, use these coordinates to draw the figure. The distance between the dotted lines is 1 unit.

Point	Coordinates
1	2, 1
2	_____
3	_____
4	_____
5	_____
6	_____
7	_____
8	_____
9	_____
10	_____
11	_____

Point	Coordinates
12	_____
13	_____
14	_____
15	_____
16	_____
17	_____
18	_____
19	_____
20	_____
21	_____
22	_____

Evaluation Copy. Do not reproduce. For information visit www.cadcim.com

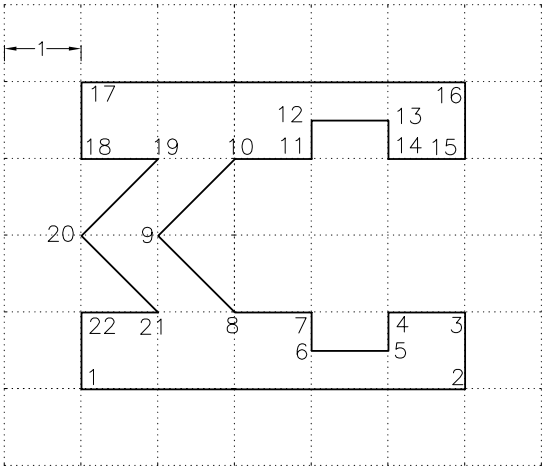

Figure 2-21 *Drawing for Exercise 2*

Relative Polar Coordinate System

In the relative polar coordinate system, the location of a point is specified by defining the distance of the point from the current point and the angle between the two points with respect to the positive *X* axis. The prompt sequence to draw a line of length 5 units whose start point is at 1,1 and inclined at an angle of 30 degrees to the *X* axis is given next, as shown in Figure 2-22.

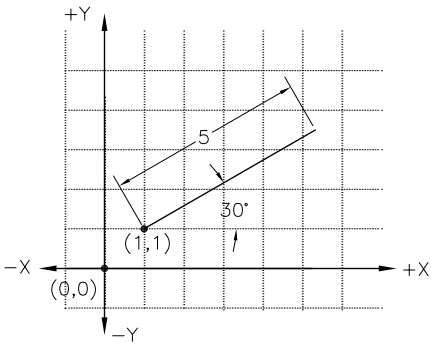

Figure 2-22 *Drawing a line by using relative polar coordinates*

*Choose the **Line** tool*
Specify first point: **1,1** Enter
Specify next point or [Undo]: **@5<30** Enter

If the **Dynamic Input** is on, by default the relative polar coordinate mode will be activated. Therefore, when you invoke the **Line** tool and specify the start point, two input boxes will be displayed. The second input box shows the angle value, preceded by the **<** symbol. Now, enter the distance value and press the TAB key to shift to the second input box, and then enter the angle value.

Sign Convention. By default, in the relative polar coordinate system, the angle is measured from the horizontal axis as the zero degree. Also, the angle is positive if measured in counter clockwise direction and is negative if measured in clockwise direction. Here, it is assumed that the default setup of the angle measurement has not been changed.



Note

*You can modify the default settings of the angle measurement direction by using the **Units** tool from the **Format** tab of the Menu Bar which is discussed later in this chapter.*

Evaluation Copy. Do not reproduce. For information visit www.cadcim.com

Example 3 *Relative Polar Coordinate*

Draw the profile shown in Figure 2-23 by using the relative polar coordinate system. The relative coordinate values of each point are given in the table. The start point is located at 1.5, 1.75. Save this drawing with the name *Exam3.dwg*.

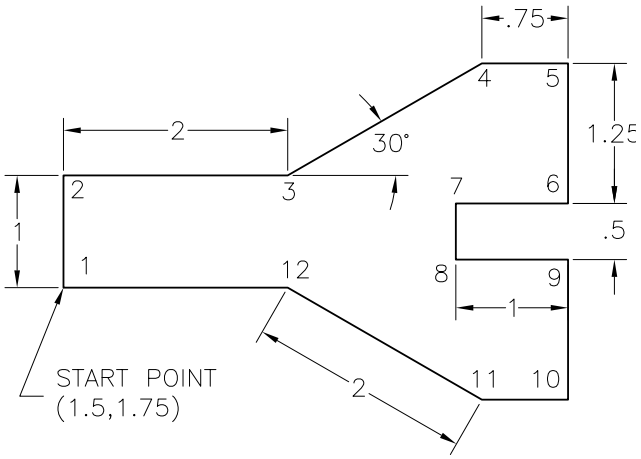

Figure 2-23 *Drawing for Example 3*

Point	Coordinates
1	1.5,1.75
2	@1.0<90
3	@2.0<0
4	@2.0<30
5	@0.75<0
6	@1.25<-90 (or <270)

Point	Coordinates
7	@1.0<180
8	@0.5<270
9	@1.0<0
10	@1.25<270
11	@0.75<180
12	@2.0<150

Start a new file with the ***acad.dwt*** template in the **Drafting & Annotation** workspace. Next, you need to modify the drawing display area. To do so, choose the **Zoom Extents** or **Zoom All** tool from the **Navigation Bar**. Next, turn off the **Dynamic Input** option by choosing the **Dynamic Input** button from the Status Bar.

*Choose the **Line** tool*

LINE Specify first point: **1.5,1.75** Enter *(Start point)*

Specify next point or [Undo]: **@1<90** Enter

Specify next point or [Undo]: **@2.0<0** Enter

Specify next point or [Close/Undo]: **@2<30** Enter

Specify next point or [Close/Undo]: **@0.75<0** Enter

Evaluation Copy. Do not reproduce. For information visit www.cadcim.com

Specify next point or [Close/Undo]: **@1.25<-90** Enter
Specify next point or [Close/Undo]: **@1.0<180** Enter
Specify next point or [Close/Undo]: **@0.5<270** Enter
Specify next point or [Close/Undo]: **@1.0<0** Enter
Specify next point or [Close/Undo]: **@1.25<270** Enter
Specify next point or [Close/Undo]: **@0.75<180** Enter
Specify next point or [Close/Undo]: **@2.0<150** Enter
Specify next point or [Close/Undo]: **C** Enter *(The last point joins with the first point)*

To save this drawing, choose the **Save** tool from the **Quick Access Toolbar**; the **Save Drawing As** dialog box will be displayed. Enter **Exam3** in the **File name** edit box and then choose the **Save** button; the drawing will be saved with the specified name in the default *Documents* folder.

Exercise 3 *Specifying Points using Coordinates*

Draw the profile, as shown in Figure 2-24 by specifying points using the relative polar coordinate system. Do not dimension the profile.

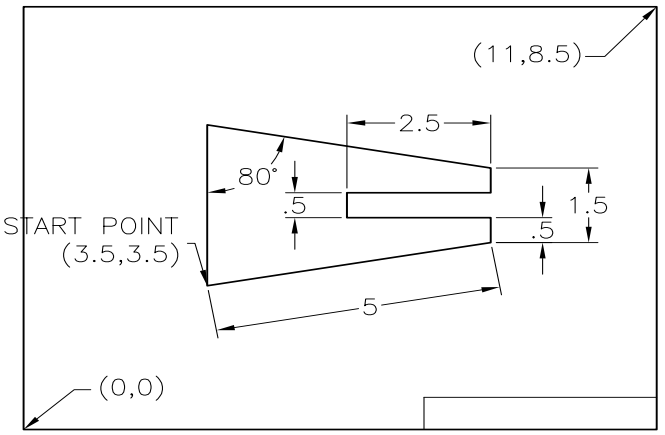

Figure 2-24 *Drawing for Exercise 3*

Direct Distance Entry

The easiest way to draw a line in AutoCAD is by using the Direct Distance Entry method. Before drawing a line by using this method, ensure that the **Dynamic Input** button is chosen in the Status Bar. Next, choose the **Line** tool; you will be prompted to specify the start point. Enter the coordinate values in the text box and press ENTER; you will be prompted to specify the next point. Now, enter the absolute length of the line and its angle with respect to the last point in the corresponding text boxes, as shown in Figure 2-25. Note that you can use the TAB key to toggle between the text boxes. If the **Ortho** mode is on while drawing lines using this method, you can position the cursor only along the *X* or *Y* axis. If the **Dynamic Input** button is not chosen,

Evaluation Copy. Do not reproduce. For information visit www.cadcim.com

then you need to enter the length of the line at the command prompt. Therefore, position the cursor at the desired angle, type the length at the command prompt, and then press ENTER, refer to Figure 2-25.

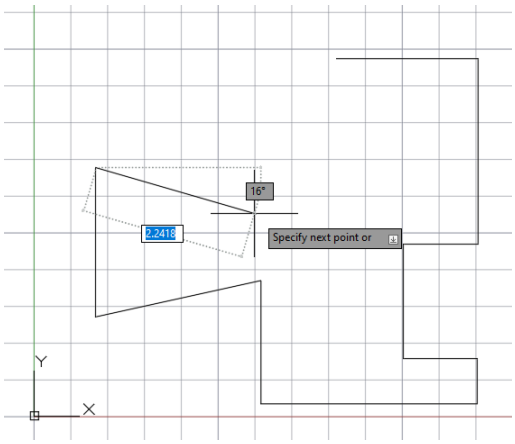

Figure 2-25 *Drawing lines using the Direct Distance Entry method*

Example 4 — Direct Distance Entry

In this example, you will draw the profile , as shown in Figure 2-26, by using the Direct Distance Entry method. The start point is 2,2.

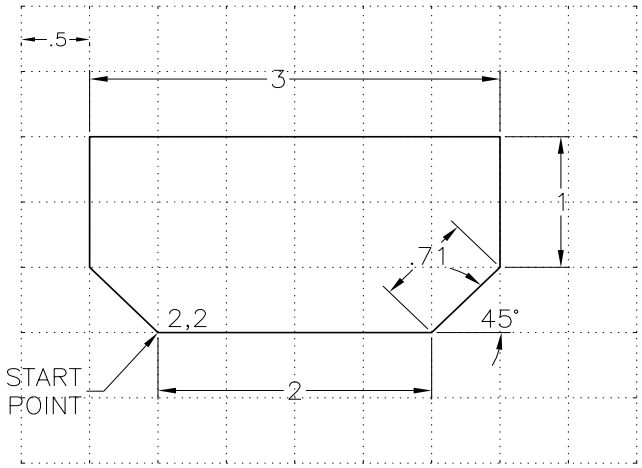

Figure 2-26 *Drawing for Example 4*

Also, you can use the **Polar Tracking** button to draw lines. The **Polar Tracking** button allows you to track the lines at specified angles. The default angle specified for polar tracking is 90 degrees. Therefore, by default, you can track lines at an angle that is multiple of 90 degrees, such as 90, 180, 270, and 360. In this example, you need to draw lines at the angles that are multiples of 45 degrees such as 45, 90, 135, and so on. Therefore, first you need to set the polar tracking angle as 45 degrees.

Evaluation Copy. Do not reproduce. For information visit www.cadcim.com



Note

You will learn more about polar tracking in Chapter 4.

1. Start a new file with the ***acad.dwt*** template in the **Drafting & Annotation** workspace.

2. Right-click on the **Polar Tracking** button on the Status Bar and then choose **45** from the shortcut menu displayed. Again, choose the **Polar Tracking** button in the Status Bar to turn polar tracking on if it is not turned on by default.

3. Choose the **Line** tool from the **Draw** panel of the **Home** tab; you are prompted to specify the start point.

4. Enter **2,2** at the command prompt and press ENTER; you are prompted to specify the next point.

5. Move the cursor horizontally toward the right and when the tooltip displays 0 as polar angle, type **2** and press ENTER; you are prompted to specify the next point.

6. Move the cursor at an angle close to 45 degrees and when the tooltip displays 45 as polar angle, type **0.71** and press ENTER; you are prompted to specify next point.

7. Move the cursor vertically upward and when the tooltip displays 90 as polar angle, type **1** and press ENTER; you are prompted to specify the next point.

8. Move the cursor horizontally toward the left and when the tooltip displays 180 as polar angle, type **3** and press ENTER; you are prompted to specify the next point.

9. Move the cursor vertically downward and when the tooltip displays 90 polar angle, type **1** and press ENTER; you are prompted to specify the next point.

10. Type **C** and press ENTER.



Tip

*You can add more angular values in the shortcut menu displayed on right clicking the **Polar Tracking** button in the Status Bar. To do so, choose the **Tracking Settings** option from the shortcut menu; the **Drafting Settings** dialog box will be displayed. Next, in the **Polar Angle Settings** area choose the **New** button and then enter the new angle value in the edit field that appears in the **Additional angles** box of the dialog box. Similarly, you can specify multiple angle values. Once you are done, choose the **OK** button.*

Exercise 4 — *Direct Distance Entry*

Use the Direct Distance Entry method to draw a parallelogram. The base of the parallelogram equals 4 units, the side equals 2.25 units, and the angle equals 45 degrees. Draw the same parallelogram using the absolute, relative, and polar coordinates. Note the differences and the advantages of using this method over the Relative and Absolute Coordinate methods.

Evaluation Copy. Do not reproduce. For information visit www.cadcim.com

ERASING OBJECTS

Ribbon: Home > Modify > Erase
Menu Bar: Modify > Erase
Command: ERASE/E
Toolbar: Modify > Erase
Tool Palettes: Modify > Erase



Sometimes, you may need to erase the unwanted objects from the drawing. You can do so by using the **Erase** tool. This tool is used exactly the same way as an eraser is used in manual drafting to delete unwanted lines. To erase an object, choose the **Erase** tool from the **Modify** panel, refer to Figure 2-27.

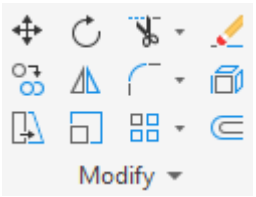

Figure 2-27 *The* ***Erase*** *tool in the* ***Modify*** *panel*

You can also choose the **Erase** tool from the **Modify** toolbar, as shown in Figure 2-28. To invoke the **Modify** toolbar, choose **Tools > Toolbars > AutoCAD > Modify** from the Menu Bar. On invoking the **Erase** tool, a small box, known as Pick box, replaces the screen cursor. Next select the object to be erased by using the pick box, refer to Figure 2-29; the selected object will be displayed in transparent lines and the **Select objects** prompt will be displayed again. You can either continue selecting the objects or press ENTER to terminate the object selection process and erase the selected objects. The prompt sequence is given next.

Choose the ***Erase*** *tool*

Select objects: *Select the first object.*

Select objects: *Select the second object.*

Select objects: press ENTER



Figure 2-28 *The* ***Erase*** *tool in the* ***Modify*** *toolbar*

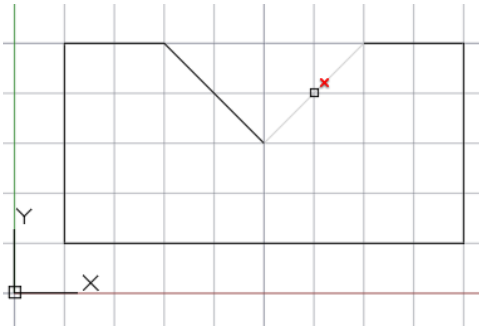

Figure 2-29 *Selecting the object by positioning the pick box at the top of the object*

If you enter **ALL** at the **Select objects** prompt, all objects in the drawing area will be selected, even if they are outside the display area. Now, if you press ENTER, all the selected objects will be erased. To erase the objects, you can also first select the objects to be erased from the drawing and then choose the **Erase** option from this shortcut menu that is displayed on right-clicking in the drawing area.

Evaluation Copy. Do not reproduce. For information visit www.cadcim.com

CANCELING AND UNDOING OPERATION

To restore the erased object, enter the **OOPS** or **UNDO** command. The **OOPS** command is used to restore the last erased object from the drawing area. The **UNDO** command is used to undo the action of the previously performed command. You can also choose the **Undo** tool from the **Quick Access Toolbar**. To cancel or exit a command, press the ESC (Escape) key on the keyboard. We will discuss in detail about the **Undo** tool later in Chapter 20.

OBJECT SELECTION METHODS

The usual method to select objects is by selecting them individually. But it will be time-consuming, if you have a number of objects to select. This problem can be solved by creating a selection set that enables you to select several objects at a time. The selection set options can be used with those tools that require object selection, such as **Erase** and **Move**. There are many object selection methods, such as **Window**, **Crossing**, and so on. In this chapter, you will learn about two methods: **Window** and **Crossing**. The remaining options are discussed in Chapter 5.

Window Selection Method

The window selection is one of the selection methods in which an object or group of objects are selected by drawing a window. The objects that are completely enclosed within the window are selected and the objects that lie partially inside the boundaries of the window are not selected. To select the objects by using the Window selection method, specify first corner point of a polygon and then type **WP** at the command prompt. Next, draw a polygon to select the object and then press ENTER. As you move the cursor, a blue color window of continuous line will be displayed. The size of this window changes as you move the cursor. Figure 2-30 shows the window drawn to select objects by using the Window selection method. The objects that will be selected are shown in light blue shaded lines.

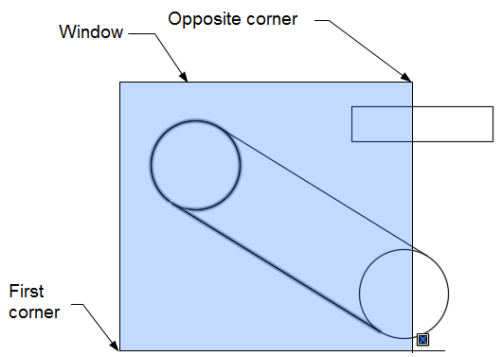

Figure 2-30 *Selecting objects using the Window selection method*

You can also use the **Window** option without entering **WP** at the command prompt. To do so, specify a point on the screen. This is considered as the first corner of the window. Moving the cursor to the right will display a blue-shaded window. After enclosing the required objects, specify the other corner of the window. The objects that are completely enclosed within the window will be selected and displayed in shaded blue lines. The following is the prompt sequence for window selection method after invoking the **Erase** tool:

Evaluation Copy. Do not reproduce. For information visit www.cadcim.com

Select objects: *Select a blank point as the first corner of the window*

Select objects: Specify opposite corner: *Drag the cursor to the right to select the other corner of the window*

Select objects: Enter

Crossing Selection Method

The crossing selection is one of the selection methods in which an object or group of objects that are completely or partially enclosed by the selection window are selected. The objects to be selected should touch the window boundaries or completely enclosed within it. To select the objects by using the Crossing selection method, specify first corner point of a polygon and then type **CP** at the command prompt and draw a polygon to select the objects and then press ENTER. As you move the cursor, a green color window with dashed outline will be displayed. Figure 2-31 shows a window drawn to select objects by using the Crossing selection method. The selected objects are shown in shaded blue lines.

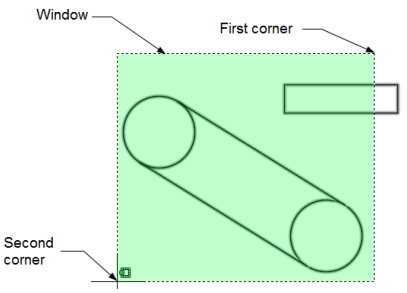

Figure 2-31 *Selecting objects using the Crossing selection method*

You can also invoke the Crossing selection method without entering **CP** at the command prompt. To do so, specify a point in the drawing area and move the cursor to the left. As you move the cursor, a green color window with dashed outline will be displayed. Specify the opposite corner of the window; the objects touching the window boundary and enclosed within this window will be selected and displayed in shaded blue lines.

The prompt sequence for the crossing selection method when you choose the **Erase** tool is given next.

Select objects: *Select a blank point as the first corner of the crossing window*

Select objects: Specify opposite corner: *Drag the cursor to the left to select the other corner of the window*

Select objects: Enter

If you do not invoke any tool and click to specify the first corner of the window for window selection or crossing selection, the command prompt provides you with three selection options: **Fence**, **WPolygon**, and **CPolygon**. If you enter **FENCE** or **F** at the command prompt, you can select objects by drawing a fence around them. If you enter **WP** or **CP** at the command prompt, you can select objects by drawing a polygon around them. These options will be discussed in detail in Chapter 5.

Lasso Selection Method

The lasso's selection is one of the selection methods in which an object or group of objects which are completely or partially enclosed by the selection area are selected. The objects to be selected should touch the window boundaries or completely enclosed within it. To select the objects by

Evaluation Copy. Do not reproduce. For information visit www.cadcim.com

using the Lasso method, press and hold the left mouse button and drag the cursor; a selection area will be displayed, as shown in Figure 2-32.

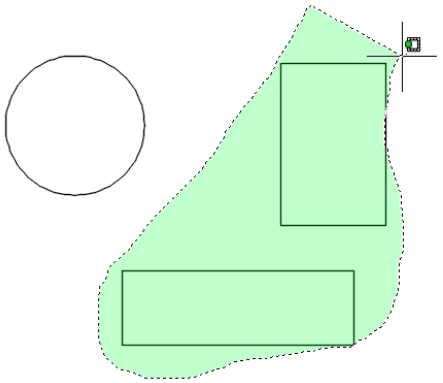

Figure 2-32 *Selecting objects using the lasso selection method*

Note that if you drag the cursor from left to right, only the objects enclosed in the area will be selected. And, if you drag the cursor from right to left, the objects touching the boundary of the lasso selection area will also be selected.

To activate the Lasso selection method, if it is not activated by default, invoke the **Options** dialog box and choose the **Selection** tab; the options available in the **Selection** tab will be displayed. Select the **Allow press and drag for Lasso** check box available in the **Selection modes** area of the dialog box, refer to Figure 2-33; the Lasso selection will be activated.

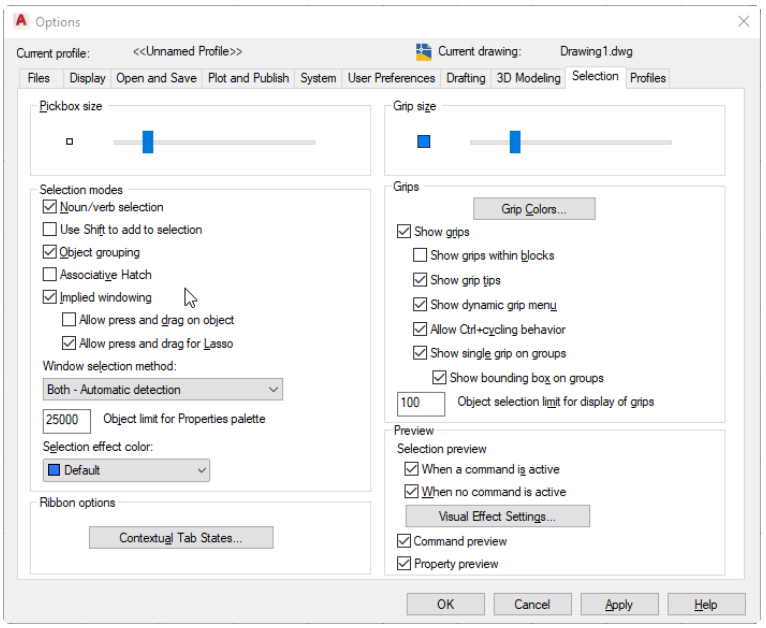

Figure 2-33 *The* ***Allow press and drag for Lasso*** *check box selected from the* ***Options*** *dialog box*

Evaluation Copy. Do not reproduce. For information visit www.cadcim.com

DRAWING A CIRCLE

Ribbon: Home > Draw > Circle
Toolbar: Draw > Circle **Menu Bar:** Draw > Circle
Tool Palettes: Draw > Circle **Command:** CIRCLE/C



In AutoCAD, you can draw a circle by using six different tools. All these tools are grouped together in the **Draw** panel of the **Ribbon**. To view these tools, choose the down arrow below the **Circle** tool in the **Draw** panel, as shown in Figure 2-34; all tools will be listed in the drop-down. Note that the name of the tool chosen last will be displayed in the **Draw** panel. You can also invoke the **Circle** tool from the **Draw** tab in the **Tool Palettes** or by entering **C** in the command prompt. The different tools to draw a circle are discussed next.

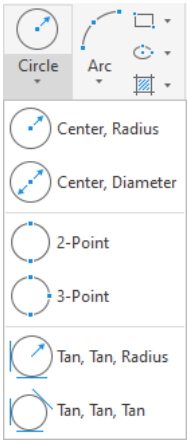

Figure 2-34 *Tools in the* ***Circle*** *drop-down*

Drawing a Circle by Specifying Center and Radius

Ribbon: Home > Draw > Circle drop-down > Center, Radius
Menu Bar: Draw > Circle> Center, Radius **Command:** CIRCLE/C

To draw a circle by specifying its center and radius when the **Dynamic Input** button is chosen, choose the **Center, Radius** tool from the **Circle** drop-down of the **Draw** panel; you will be prompted to specify the center of the circle. Type the coordinates and press ENTER or specify the center by using the left mouse button. After specifying the center of the circle, move the cursor to define its radius; the current radius of the circle will be displayed in a dimension input box, as shown in Figure 2-35. This radius value will change as you move the cursor. Type a radius value in the dimension input box or click to define the radius; a circle of the specified radius value will be drawn. If the **Dynamic Input** is not chosen, you need to specify the input values in the command prompt.

Drawing a Circle by Specifying Center and Diameter

Ribbon: Home > Draw > Circle drop-down > Center, Diameter
Menu Bar: Draw > Circle> Center, Diameter

To draw a circle by specifying its center and diameter, when the **Dynamic Input** button is chosen, choose the **Center, Diameter** tool from the **Circle** drop-down of the **Draw** panel; you will be prompted to specify the center. Type the coordinates and press ENTER or specify the center by using the left mouse button. After specifying the center of the circle, move the cursor to define its diameter; the current diameter of the circle will be displayed in the dimension input box, as shown in Figure 2-36. This diameter value will change as you move the cursor. Type a diameter value in the dimension input box or click to define the diameter; a circle of the specified diameter value will be drawn. If the **Dynamic Input** is not chosen, you need to specify the input values in the command prompt.

Evaluation Copy. Do not reproduce. For information visit www.cadcim.com

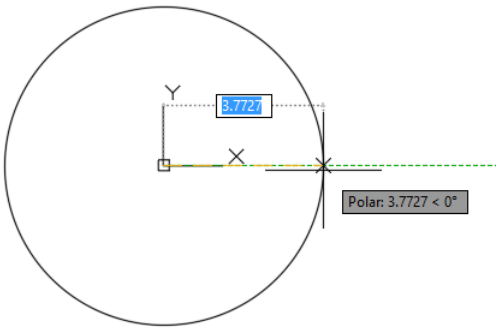

Figure 2-35 *Drawing a circle by specifying the center and the radius*

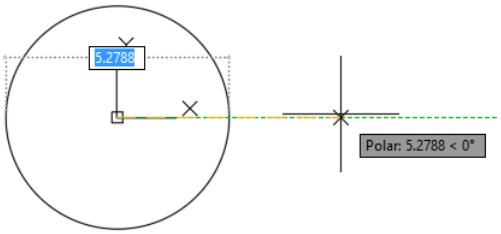

Figure 2-36 *Drawing a circle by specifying the center and the diameter*

Drawing a Circle by Specifying Two Diametrical Ends

Ribbon: Home > Draw > Circle drop-down > 2-Point
Menu Bar: Draw > Circle> 2 Points **Command:** CIRCLE/C > 2P

You can also draw a circle by specifying its two diametrical ends, refer to Figure 2-37. To do so, choose the **2-Point** tool from the **Circle** drop-down of the **Draw** panel; you will be prompted to specify the first end of the diameter. Type the coordinates and press ENTER. After specifying the first end point of the diameter of the circle you will be prompted to specify second end point of the circle's diameter. Type the coordinates and press ENTER or click in the drawing area to specify the second point of the circle's diameter.

Drawing a Circle by Specifying Three Points of a Circle

Ribbon: Home > Draw > Circle drop-down > 3-Point
Menu Bar: Draw > Circle> 3 Points **Command:** CIRCLE/C > 3P

To draw a circle by specifying three points on its periphery, choose the **3-Point** tool from the **Circle** drop-down of the **Draw** panel and specify the three points in succession. You can type the coordinates of the points or specify them by using the left mouse button.

The prompt sequence to enter three coordinates on choosing the **3-Point** tool is given below.

Specify center point for circle or [3P/2P/Ttr(tan tan radius)]: _3p
Specify first point on circle: **3,3**
Specify second point on circle: **3,1**
Specify third point on circle: **4,2** *(refer to Figure 2-38)*

You can also use the relative rectangular coordinates to define the points.

Evaluation Copy. Do not reproduce. For information visit www.cadcim.com

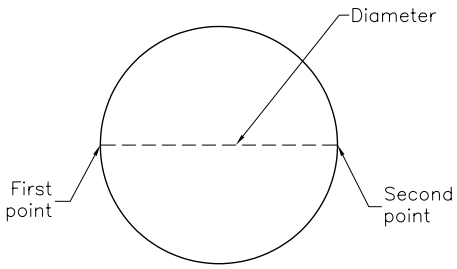

Figure 2-37 *A circle drawn by using the* ***2-Point*** *tool*

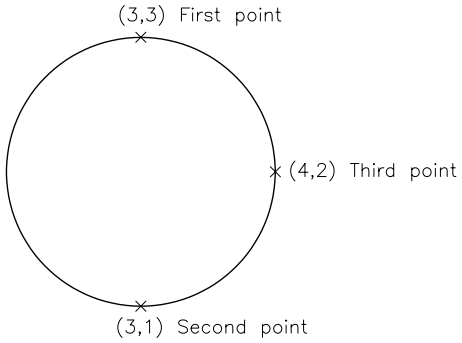

Figure 2-38 *A circle drawn by using the* ***3-Point*** *tool*

Drawing a Circle Tangent to Two Objects

Ribbon: Home > Draw > Circle drop-down > Tan, Tan, Radius
Menu Bar: Draw > Circle> Tan, Tan, Radius **Command:** CIRCLE/C > T

An object (line, circle, or arc) is said to be tangent to a circle or an arc if it touches the circumference of the circle or the arc at only one point. To draw a circle that has specified radius and is tangent to two objects, choose the **Tan, Tan, Radius** tool from the **Circle** drop-down of the **Draw** panel; you will be prompted to specify a point on the first object to be tangent to the circle. Move the cursor near the object to be made tangent to the circle; a tangent symbol will be displayed. Specify the first point; you will be prompted to specify a point on the second object to be made tangent to the circle. Move the cursor near the second object that is to be tangent to the circle; a tangent symbol will be displayed. Specify the second point; you will be prompted to specify the radius. Type the radius value in the dimension input box and press ENTER; a circle of the specified radius and tangent to two specified objects will be drawn.

In Figure 2-39 through Figure 2-42, the dotted circle represents the circle that is tangent to two objects. The circle actually drawn depends on how you select the objects to be made tangent to the new circle. The figures show the effect of selecting different points on the objects. If you specify too small or large radius, you may get unexpected results or the "**Circle does not exist**" prompt.

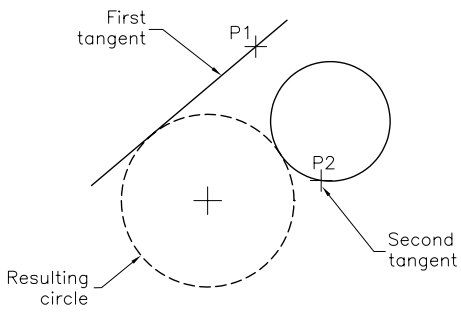

Figure 2-39 *Drawing a circle tangent to two objects*

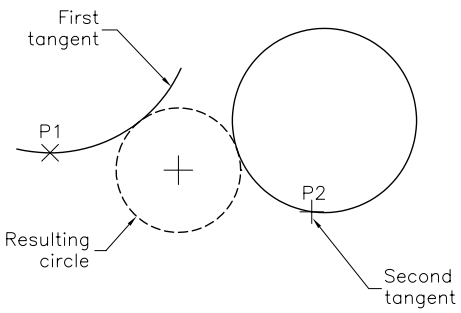

Figure 2-40 *Drawing a circle tangent to two objects*

Evaluation Copy. Do not reproduce. For information visit www.cadcim.com

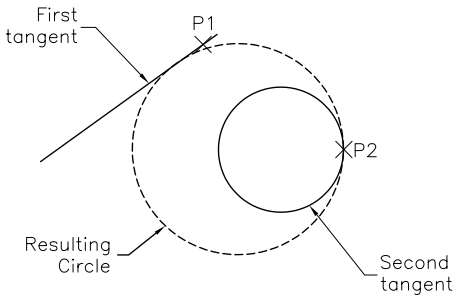

Figure 2-41 Drawing a circle tangent to two objects

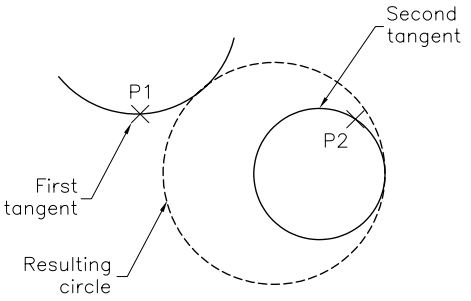

Figure 2-42 Drawing a circle tangent to two objects

Drawing a Circle Tangent to Three Objects

Ribbon: Home > Draw > Circle drop-down > Tan, Tan, Tan
Menu Bar: Draw > Circle> Tan, Tan, Tan

You can also draw a circle that is tangent to three objects. To do so, choose the **Tan, Tan, Tan** tool from the **Circle** drop-down of the **Draw** panel and select the three objects in succession to which the resulting circle is to be tangent; the circle will be drawn, as shown in Figure 2-43.

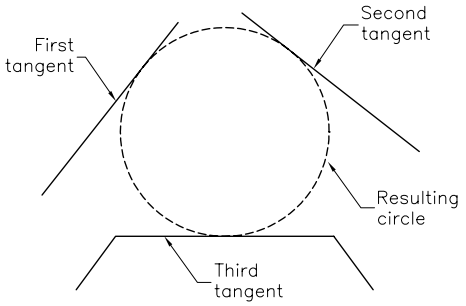

Figure 2-43 Drawing a circle tangent to three objects

Exercise 5 *Line and Circle*

Draw the profile shown in Figure 2-44 using various options of the **Line** and **Circle** tools. Use the absolute, relative rectangular, or relative polar coordinates for drawing the triangle. The vertices of the triangle will be used as the centers of the circles. The circles can be drawn by using the **Center, Radius**, or **Center, Diameter**, or **Tan, Tan, Tan** tools.

Evaluation Copy. Do not reproduce. For information visit www.cadcim.com

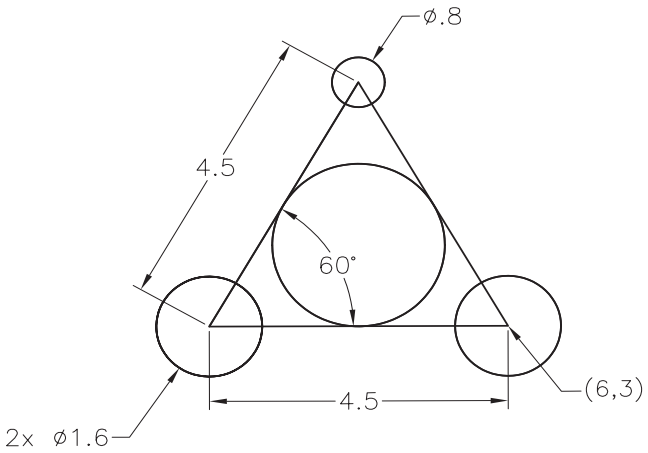

Figure 2-44 *Drawing for Exercise 5*

BASIC DISPLAY COMMANDS

Sometimes while drawing a sketch, it may be very difficult to view and alter minute details. You can overcome this problem by viewing only a specific portion of the drawing. This is done by using the **Zoom** tools. These tools let you enlarge or reduce the size of the drawing displayed on the screen. Similarly, you may need to slide the drawing view. This can be done by using the **Pan** tool. These are called display commands and are discussed next.

Zooming Drawings

Zoom tools are used to enlarge or reduce the view of a drawing on the screen, without affecting the actual size of entities. These tools are grouped together and are available in the Navigator Bar. To invoke different Zoom tools, click on the down arrow at the bottom of the **Zoom Extents** tool in the **Navigator Bar**; the **Zoom** drop-down will be displayed with different Zoom tools, as shown in Figure 2-45. You can also invoke the Zoom tools by choosing **View > Zoom** from the Menu Bar. To display the Menu Bar, click on the down arrow in the **Quick Access Toolbar** and then select **Show Menu Bar** option from the drop-down displayed. Some Zoom tools are also available in the **Standard** toolbar. These tools are discussed next.

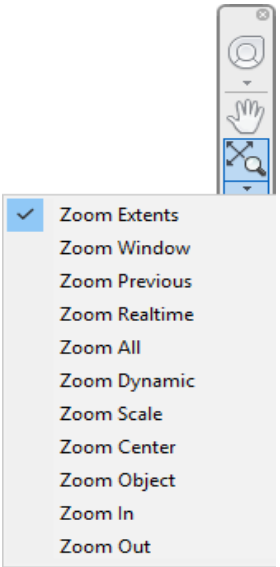

Figure 2-45 *Zoom tools in the* ***Navigator Bar***

Zoom Extents

Choose the **Zoom Extents** tool to increase or decrease the drawing display area so that all sketched entities or dimensions fit inside the current view.

Zoom Window

This is the most commonly used tool of the **Zoom** drop-down. On choosing this tool, you need to draw a window by specifying its two opposite corners. The center of the zoom window becomes the center of the new display area and the objects in this window are magnified.

Evaluation Copy. Do not reproduce. For information visit www.cadcim.com

Zoom Realtime



The **Zoom Realtime** tool is used to dynamically zoom in or out a drawing. When you choose this tool, the cursor will be replaced by the zoom cursor. To zoom out a drawing, press and hold the left mouse button and drag the cursor downward. Similarly, to zoom in a drawing, press and hold the left mouse button and drag the cursor upward. As you drag the cursor, the display of drawing changes dynamically. After you get the desired view, exit this tool by right-clicking and then choosing **Exit** from the shortcut menu displayed. On exiting this tool, the zoom cursor will change into crosshairs. You can exit the **Zoom Realtime** tool by pressing the ESC key. You can also use the scroll wheel to zoom in/out the drawing.

Zoom Previous



While working on a complex drawing, you may need to zoom in a drawing multiple times to edit some minute details. After completing the editing, if you want to view the previous views, choose the **Zoom Previous** tool. You can view up to the last ten views by using the **Zoom Previous** tool.

Zoom In / Zoom Out



Choose the **Zoom In / Zoom Out** tool to increase/decrease the size of the drawing view twice/half of the original drawing size, respectively.



Note

You will learn in detail about rest of the Zoom tools in Chapter 6.

Moving the View



You can use the **Pan** tool to move a view by sliding and placing it at the required position. To pan a drawing view, invoke the **Pan** tool from the Navigator Bar; a hand cursor will be displayed. Click and drag the cursor in any direction to move the drawing. To exit the **Pan** tool, right-click and then choose **Exit** from the shortcut menu. You can also press the ESC or ENTER key to exit the tool.

SETTING UNITS TYPE AND PRECISION

Application Menu: Drawing Utilities > Units **Command:** UNITS/UN



In the previous chapter, you learned to set units while starting a drawing by using the **Use a Wizard** option in the **Startup** dialog box. But, if you are drawing a sketch in an existing template or in a new template, you need to change the format of the units for distance and angle measurements. To do so, choose **Format > Units** from the Menu Bar; the **Drawing Units** dialog box will be displayed, as shown in Figure 2-46. You can also invoke this dialog box by choosing **Drawing Utilities > Units** from the **Application Menu**. The procedure to change the units format is discussed next.

Evaluation Copy. Do not reproduce. For information visit www.cadcim.com

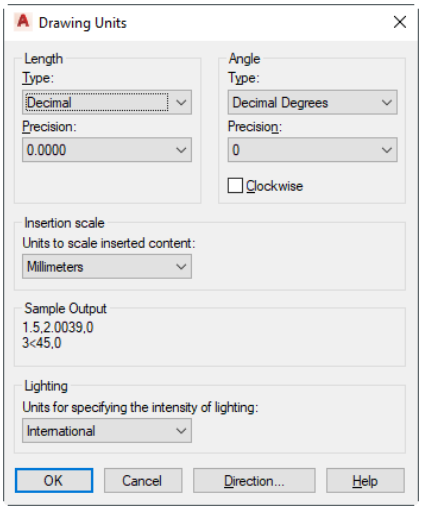

Figure 2-46 *The* ***Drawing Units*** *dialog box*

Specifying the Format

In the **Drawing Units** dialog box, you can select desired format of units from the **Type** drop-down list available in the **Length** area. You can select any one of the five formats given next.

Architectural (0'-01/16")	Decimal (0.0000)	Engineering (0'-0.0000")
Fractional (0 1/16)	Scientific (0.00E+01)	

If you select the scientific, decimal, or fractional format, you can enter the values for distance or coordinate in any of these three formats. But, if you select the engineering or architectural format, you can enter the values for distance or coordinate in any of the five formats.

Note

The inch symbol (") is optional. For example, 1'1-3/4" is same as 1'1-3/4 and 3/4" is same as 3/4.

Specifying the Angle Format

You can select any one of the following five angle measuring formats:

1. Decimal Degrees (0)
2. Deg/min/sec (0d)
3. Grads (0g)
4. Radians (0r)
5. Surveyor's Units (N 0d E)

If you select any one of the first four measuring formats, you can specify the angle in the Decimal, Degrees/minutes/seconds, Grads, or Radians formats, but you cannot enter the angle in the Surveyor's Units system. However, if you select the Surveyor's Units system, you can enter angle values in any of the five systems. To enter a value in another system, use the appropriate suffixes and symbols, such as r (Radians), d (Degrees), or g (Grads). If you enter an angle value without indicating the symbol of a measuring system, it is taken in the current system.

Evaluation Copy. Do not reproduce. For information visit www.cadcim.com

In Surveyor's Units, you must specify the angle that the line makes with respect to the north-south direction, as shown in Figure 2-47. For example, if you want to define an angle of 60-degree with north, in the Surveyor's Units the angle will be specified as N 60d E. Similarly, you can specify angles such as S 50d E, S 50d W, and N 75d W, refer to Figure 2-47. You cannot specify an angle that exceeds 90-degree (N 120 E). Angles can also be specified in radians or grads; for example, 180-degree is equal to π(3.14159) radians. You can convert degrees into radians, or radians into degrees by using the equations given below.

radians = degrees X 3.14159/180;
degrees = radians X 180/3.14159

Grads are generally used in land surveys. There are 400 grads or 360 degree in a circle. 90 degree angle is equal to 100 grads.

In AutoCAD, the angles are measured from the positive X axis. If measured in a counterclockwise direction, then angles are positive and vice-versa, refer to Figure 2-48. If you want the angles to be measured as positive in clockwise direction, select the **Clockwise** check box from the **Angle** area. You can specify the precision for the length and angle in the respective **Precision** drop-down lists in this dialog box.

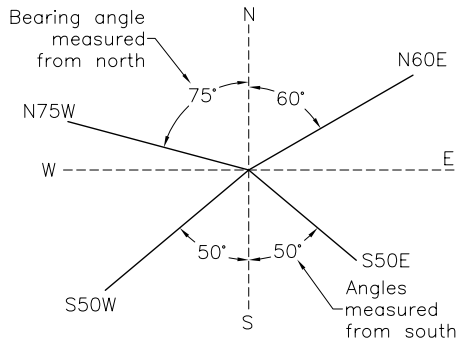

Figure 2-47 *Specifying angles in Surveyor's Units*

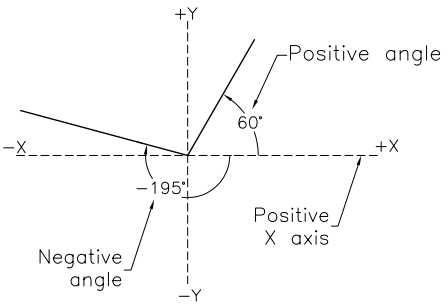

Figure 2-48 *Measuring angles*

Setting the Direction for Angle Measurement

As mentioned above, angles are measured about the positive X axis. This means the base angle (0-degree) is set along the east direction, refer to Figure 2-49. To change this base angle, choose the **Direction** button in the **Drawing Units** dialog box; the **Direction Control** dialog box will be displayed, as shown in Figure 2-50. Select the appropriate radio button to specify the direction for the base angle (0-degree).

If you select the **Other** option, you can set the direction of your choice for the base angle (0-degree) by entering a value in the **Angle** edit box or by choosing the **Pick an angle** button and picking two points to specify the angle. After specifying the base angle direction, choose the **OK** button to apply the settings.

Evaluation Copy. Do not reproduce. For information visit www.cadcim.com

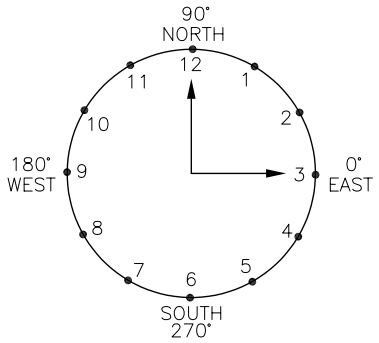

Figure 2-49 *North, South, East, and West directions*

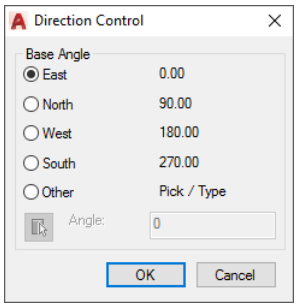

Figure 2-50 *The* ***Direction Control*** *dialog box*

Tip

If you are entering values by using the dimension input boxes that are displayed when the ***Dynamic Input*** *option is on, then you are not required to set the base angle.*

Specifying Units for the Drawing or Block to be Inserted

To set units for a block or a drawing to be inserted, select a unit from the **Units to scale inserted content** drop-down list. Now, if you insert a block or a drawing from the **DesignCenter**, the specified unit will be applied to the block. Even if the block was created using a different measuring unit, AutoCAD scales it and inserts it using the specified measuring unit. If you select **Unitless** from the drop-down list, then the units specified in the **Insertion Scale** area of the **User Preferences** tab in the **Options** dialog box will be used.

Note

Inserting blocks in a drawing is discussed in detail in Chapter 16.

Sample Output

The **Sample Output** area in this dialog box shows the example of the current format used for specifying units and angles. When you change the type of length and angle measure in the **Length** and **Angle** areas of the **Drawing Units** dialog box, the corresponding example is displayed in the **Sample Output** area.

Specifying Units for Lighting

You can also specify the units to be used for the measurement of intensity of photometric lights. Photometric lights are used for rendering the objects. Select the desired unit system from the **Units for specifying the intensity of lighting** drop-down list in the **Lighting** area of the **Drawing Units** dialog box.

Example 5 *Setting Units*

In this example, you will set units for a drawing based on the specifications given below and then draw Figure 2-51.

Evaluation Copy. Do not reproduce. For information visit www.cadcim.com

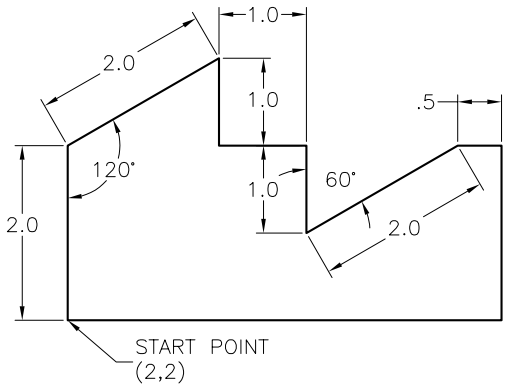

Figure 2-51 *Drawing for Example 5*

a. Set the units of length to decimal with precision equal to 0.
b. Set the angular measurement to Surveyor's Units with precision equal to N 0d E.
c. Set the base angle (0-degree) to North and the direction of measurement of angles to clockwise.

The following steps are required to complete this example:

1. Start a new file with the ***acad.dwt*** template in the **Drafting & Annotation** workspace and invoke the **Drawing Units** dialog box by choosing **Drawing Utilities > Units** from the **Application Menu**. You can also invoke this dialog box by choosing **Format > Units** from the Menu Bar.

2. In the **Length** area of this dialog box, select **Decimal** from the **Type** drop-down list. Select **0** from the **Precision** drop-down list.

3. In the **Angle** area of this dialog box, select **Surveyor's Units** from the **Type** drop-down list. From the **Precision** drop-down list, select **N 0d E** if not already selected. Also, select the **Clockwise** check box to set the clockwise angle measurement to positive.

4. Choose the **Direction** button to display the **Direction Control** dialog box. Next, select the **North** radio button. Choose the **OK** button to exit the **Direction Control** dialog box.

5. Choose the **OK** button to exit the **Drawing Units** dialog box.

6. With the units set, you need to draw Figure 2-51 using the relative polar coordinates. Turn off the dynamic input. The prompt sequence to complete the sketch is as follows:

*Choose the **Line** tool*
LINE Specify first point: ***2,2*** Enter
Specify next point or [Undo]: ***@2<0*** Enter
Specify next point or [Undo]: ***@2<60*** Enter

Evaluation Copy. Do not reproduce. For information visit www.cadcim.com

Specify next point or [Close/Undo]: ***@1<180*** Enter
Specify next point or [Close/Undo]: ***@1<90*** Enter
Specify next point or [Close/Undo]: ***@1<180*** Enter
Specify next point or [Close/Undo]: ***@2<60*** Enter
Specify next point or [Close/Undo]: ***@0.5<90*** Enter
Specify next point or [Close/Undo]: ***@2<180*** Enter
Specify next point or [Close/Undo]: ***C*** Enter

Here, the units are decimal and the angles are measured from north (90-degree axis). Also, the angles are measured as positive in a clockwise direction and negative in a counterclockwise direction.

7. Choose the **Zoom All** tool from the Navigator Bar; the drawing display area gets modified.

SETTING THE LIMITS OF A DRAWING

Menu Bar: Format > Drawing Limits **Command:** LIMITS

In AutoCAD, the drawing area is endless. Therefore, you need to apply limits to the drawing area before starting the drawing. In the previous chapter, you learned to set limits while starting a drawing by using the **Use a Wizard** option in the **Startup** dialog box. If you are working in a drawing by using the default template, you need to change the limits. For example, the template **acad.*dwt*** has the default limits set to 12,9. To draw a rectangle of dimension 15x10 in this template, you need to change its limits to 24x18. To do so, choose **Format > Drawing Limits** from the Menu Bar; you will be prompted to specify the lower left corner. The following is the prompt sequence of this tool for setting the limits to 24,18 for the ***acad.dwt*** template which has the default limits 12,9.

*Choose the **Drawing Limits** tool*
Reset Model space limits:
Specify lower left corner or [ON/OFF]<0.0000,0.0000>: **0,0** Enter
Specify upper right corner <12.0000,9.0000>: **24,18** Enter



Tip
*Whenever you reset the drawing limits, the display area does not change automatically. To change the display area, use the **Zoom All** tool from the **Zoom** drop-down.*

The limits of the drawing area are usually determined by the following factors:

1. The actual size of drawing.
2. The space needed for adding dimensions, notes, bill of materials, and other necessary details.
3. The space between various views so that the dra wing does not look cluttered.
4. The space for the border and title block, if any.

Evaluation Copy. Do not reproduce. For information visit www.cadcim.com

Setting Limits

To get a good idea of how to set up limits, it is better to draw a rough sketch of a drawing. This will help in calculating the required drawing area. For example, if an object has a front view size of 5 X 5, a side view size of 3 X 5, and a top view size of 5 X 3, the limits should be set so that the drawing and everything associated with it can be easily accommodated within the set limit. In Figure 2-52, the space between the front and side views is 4 units and between the front and top views is 3 units. Also, the space between the border and the drawing is 5 units on the left, 5 units on the right, 3 units at the bottom, and 2 units at the top. (The space between the views and between the borderline and the drawing depends on the drawing.)

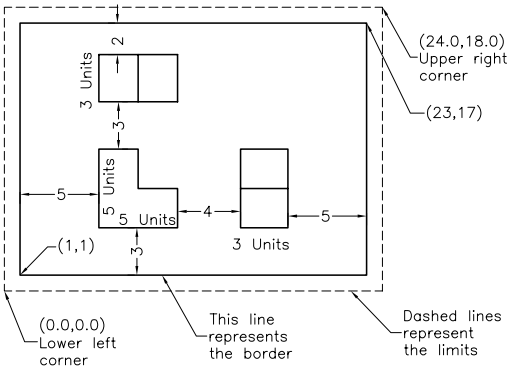

Figure 2-52 *Setting limits in a drawing*

After knowing the size of different views, the space required between views, the space between the border and the drawing, and the space required between the borderline and the edges of the paper, you can calculate the space in the following way:

Space along (*X* axis) = 1 + 5 + 5 + 4 + 3 + 5 + 1 = 24
Space along (*Y* axis) = 1 + 3 + 5 + 3 + 3 + 2 + 1 = 18

This shows that the limits you need to set for this drawing are 24 X 18. Once you have determined the space, select the sheet size that can accommodate your drawing. In the case just explained, you will select a D size (34 X 22) sheet. Therefore, the actual drawing limits will be 34,22.



Tip

To display the grid, choose the ***Display drawing grid*** *button from the Status Bar. By default, the grid will be displayed beyond the limits. To display the grid up to the limits, use the* ***Limits*** *option of the* ***GRID*** *command and set the* ***Display grid beyond Limits [Yes/No] <Yes>****: to* ***No****; the grids will be displayed only up to the limits set.*

Limits for Architectural Drawings

Most architectural drawings are drawn at the scale of 1/4" = 1', 1/8" = 1', or 1/16" = 1'. You must set the limits accordingly. The following example illustrates how to calculate the limits of an architectural drawing.

Given

Sheet size = 24" X 18"
Scale is 1/4" = 1'

Calculate limits

Scale is 1/4" = 1'

Evaluation Copy. Do not reproduce. For information visit www.cadcim.com

or 1/4" = 12"
or 1" = 48"
X limit = 24" X 48"
= 1152" or 1152 Units
= 96'
Y limit = 18" X 48"
= 864" or 864 Units
= 72'

Thus, the scale factor is 48 and the limits are 1152",864" or 96',72'.

Example 6 *Setting Limits*

In this example, you will calculate the limits and determine an appropriate drawing scale factor for the drawing shown in Figure 2-53. You will plot the drawing on a 12" X 9" sheet.

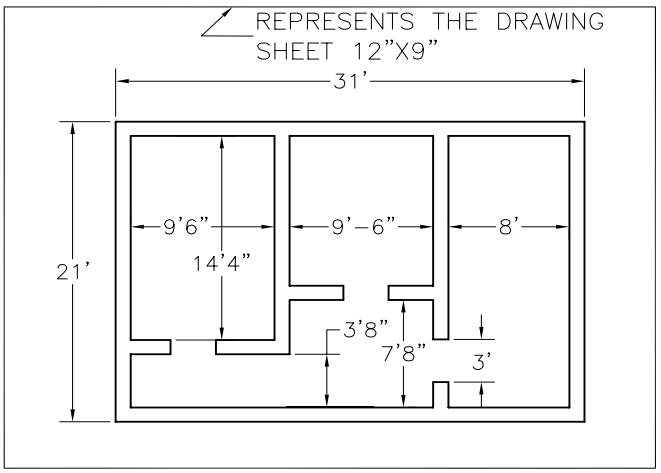

Figure 2-53 *Drawing for Example 6*

The calculation for the scale factor is given next.

Given or known

Overall length of the drawing = 31'
Length of the sheet = 12"
Approximate space between the drawing and the edges of the paper = 2"

Calculate the scale factor

To calculate the scale factor, you have to try various scales until you find the one that satisfies the given conditions. After some experience, you will find this fairly easy to do. For this example, assume a scale factor of 1/4" = 1'.

Scale factor 1/4" = 1' or 1" = 4'

Thus, a line 31' long will be = 31'/4' = 7.75" on paper. Similarly, a line 21' long = 21'/4' = 5.25". Approximate space between the drawing and the edges of paper = 2".

Evaluation Copy. Do not reproduce. For information visit www.cadcim.com

Therefore, the total length of the sheet = 7.75 + 2 + 2 = 11.75”

Similarly, the total width of the sheet = 5.25 + 2 + 2 = 9.25”

Because you selected the scale 1/4” = 1’, the drawing will definitely fit in the given sheet of paper (12” x 9”). Therefore, the scale for this drawing is 1/4” = 1’.

Calculate limits

Scale factor = 1” = 48” or 1” = 4’
The length of the sheet is 12”
Therefore, X limit = 12 X 4’ = 48’ and Y limit = 9 X 4’ = 36’

Limits for Metric Drawings

When the drawing units are in metric, you must use the standard metric size sheets or calculate limits in millimeters (mm). For example, if the sheet size is 24 X 18, the limits, after conversion to the metric system, will be 609.6,457.2 (multiplying length and width by 25.4). You can round these numbers to the nearest whole numbers 610,457. Note that the metric drawings do not require any special setup, except for the limits. Metric drawings are like any other drawings that use decimal units. Similar to architectural drawings, you can draw metric drawings to a scale. For example, if the scale is 1:20, you must calculate the limits accordingly. The following example illustrates how to calculate limits for metric drawings:

Given

Sheet size = 24” X 18”
Scale = 1:20

Calculate limits

Scale is 1:20
Therefore, scale factor = 20
X limit = 24 X 25.4 X 20 = 12192 units
Y limit = 18 X 25.4 X 20 = 9144 units

Exercise 6 *Setting Units and Limits*

Set the units of the drawing according to the specifications given below and then make the drawing shown in Figure 2-54 (leave a space of 3 to 5 units around the drawing for dimensioning and title block). The space between the dotted lines is 1 unit.

Evaluation Copy. Do not reproduce. For information visit www.cadcim.com

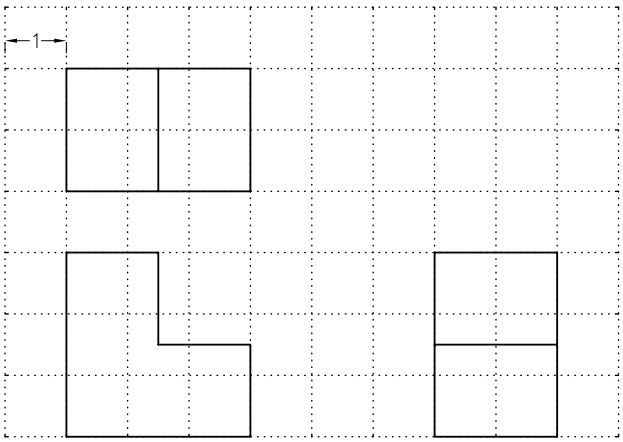

Figure 2-54 *Drawing for Exercise 6*

1. Set UNITS to decimal units with two digits to the right of the decimal point.
2. Set the angular measurement to decimal degrees, with the number of decimal places for display of angles equal to 1.
3. Set the direction to 0-degree (east) and the direction of measurement of angles to counterclockwise (angles measured positive in a counterclockwise direction).
4. Set the limits leaving a space of 3 to 5 units around the drawing for dimensioning and title block.

INTRODUCTION TO PLOTTING DRAWINGS

Ribbon: Output > Plot > Plot
Application Menu: Print > Plot
Quick Access Toolbar: Plot
Command: PLOT or PRINT



After creating a drawing of an architectural plan or a mechanical component, you may need to send it to the client or have a hard copy for reference. To do so, you need to plot the drawing. To plot the drawing, choose **Plot** from the **Quick Access Toolbar**; the **Plot-Model** dialog box will be displayed. If the dialog box is not expanded by default, choose the **More Options** button at the lower right corner of the dialog box to expand it, refer to Figure 2-55.

Evaluation Copy. Do not reproduce. For information visit www.cadcim.com

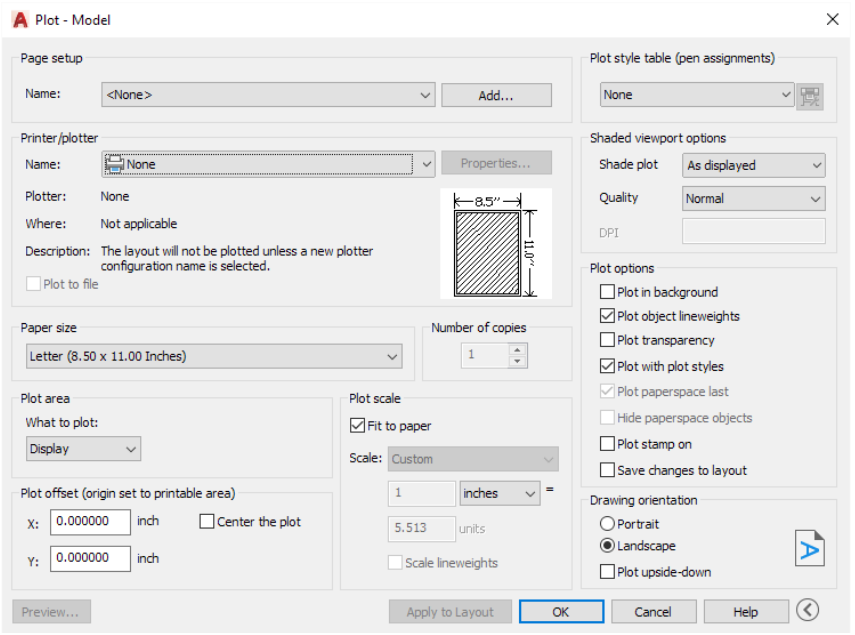

Figure 2-55 *The* ***Plot-Model*** *dialog box*

Basic Plotting

Basic plotting involves selecting the correct output device (plotter), specifying the area to plot, selecting the paper size, specifying the plot origin, orientation, and the plot scale.

To learn basic plotting, you will plot the drawing drawn in Example 3 of this chapter. It is assumed that AutoCAD is configured for two output devices: Default Windows System Printer and 53436DrawingMaster DM800.

1. Invoke the **Plot** dialog box by choosing the **Plot** tool in the **Quick Access Toolbar.**

2. The name of the default system printer is displayed in the **Name** drop-down list in the **Printer/plotter** area. Select the printer to be used from the **Name** drop-down list.

3. Select the **Window** option from the **What to plot** drop-down list in the **Plot area**. The dialog box will close temporarily and the drawing area will appear. Next, select two opposite corners to define a window that can enclose the entire area you want to plot. Note that the complete drawing along with the dimensions should be enclosed in the window. Once you have defined the two corners, the **Plot** dialog box will reappear.

4. To set the size of the plot, you need to select a paper size from the drop-down list in the **Paper size** area. After selecting the paper size, you need to set the orientation of the paper. To set the orientation, expand the **Plot** dialog box by choosing the **More Options** button at the lower right corner of the dialog box. You can set the orientation as **Landscape** or **Portrait** by selecting the appropriate radio button from the **Drawing orientation** area. The sections in the **Plot** dialog box related to the paper size and orientation are automatically

Evaluation Copy. Do not reproduce. For information visit www.cadcim.com

revised to reflect the new paper size and orientation. For this example, you will specify the **A4** paper size and the **Portrait** orientation.

5. You can also modify values for the plot offset in the **Plot offset (origin set to printable area)** area; the default value for X and Y is 0. For this example, you can select the **Center the plot** check box to get the drawing at the center of the paper.

6. In AutoCAD, you can enter values for the plot scale in the **Plot scale** area. Clear the **Fit to paper** check box if it is selected and then click on the **Scale** drop-down list in the **Plot scale** area to display various scale factors. From this list, you can select a scale factor based on your requirement. For example, if you select the scale factor **1/4" = 1'-0"**, the edit boxes below the drop-down list will show 0.25 inches = 12 units. If you want the drawing to be plotted so that it fits on the specified sheet of paper, select the **Fit to paper** check box. On selecting this check box, AutoCAD will determine the scale factor and display it in the edit boxes. For this example, you will plot the drawing so that it scales to fit the paper. Therefore, select the **Fit to paper** check box and notice the change in the edit boxes. You can also enter arbitrary values in the edit boxes.

7. To preview a plot, choose the **Preview** button. You can preview the plot on the specified paper size. In the preview window, the realtime zoom icon will be displayed. If needed, you can zoom in or zoom out the preview image for better visualization.

8. If the plot preview is satisfactory, you can plot your drawing by right-clicking and then choosing **Plot** from the shortcut menu displayed. If you want to make some changes in the settings, choose **Exit** in the shortcut menu or press the ESC or ENTER key to get back to the dialog box. Change the parameters and choose the **OK** button in the dialog box to plot the drawing.

MODIFYING AutoCAD SETTINGS BY USING THE OPTIONS DIALOG BOX

Application Menu: Options **Command:** OPTIONS/OP

You can use the **Options** dialog box to change the default settings and customize them to your requirements. For example, you can use this dialog box to turn off the settings that are used to display the shortcut menu, change the display color of the objects, or specify the support directories containing the files you need.

To invoke the **Options** dialog box, right-click at the command prompt or in the drawing area when no command is active or no object is selected and then choose **Options** from the shortcut menu; the **Options** dialog box will be displayed, as shown in Figure 2-56. The name of the current profile and the current drawing names will be displayed below the title bar. You can save a set of custom settings in a profile to be used later for other drawings. The different tabs in the **Options** dialog box are discussed next.

Evaluation Copy. Do not reproduce. For information visit www.cadcim.com

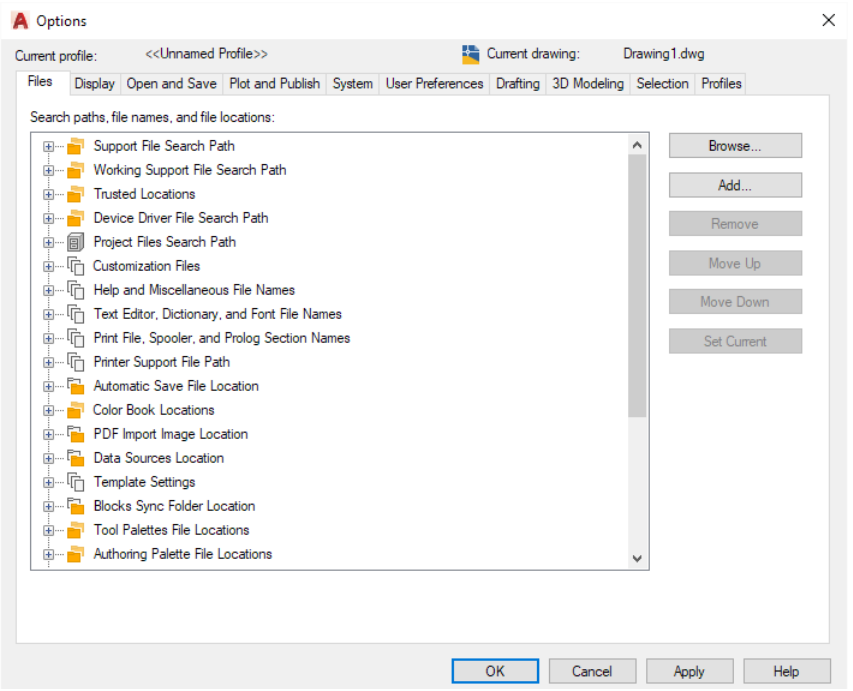

Figure 2-56 *The* ***Options*** *dialog box*

Files

This tab stores the directories in which AutoCAD looks for the driver, support, menu, project, template, and other files. It uses three icons: folder, paper stack, and file cabinet. The folder icon is for a search path, the paper stack icon is for files, and the file cabinet icon is for a specific folder. Suppose you want to know the path of the font mapping file. To do so, you need to click on the **+** symbol before the **Text Editor**, **Dictionary, and Font File Names** folders and then select the **Font Mapping File** node, refer to Figure 2-56. Similarly, you can define a custom hatch pattern file and then add its search path.

Display

This tab is used to control the drawing and window settings like screen menu display and scroll bar. For example, to display scroll bars in the drawing window to scroll up and down, select the **Display scroll bars in drawing window** check box from the **Window Elements** area. You can change the background color of the graphics window, layout window, and command line as well as the color of the command line text by using the **Drawing Window Colors** dialog box that is displayed on choosing the **Colors** button. In the **Display** tab, you can specify the parameters to set the display resolution and display performance. You can also set the smoothness and resolutions of certain objects such as circle, arc, rendered object, and polyline curve.

You can also toggle on and off the display performance such as pan and zoom with raster images, apply the solid fills, and so on. In this tab, you can toggle on and off the various layout elements such as the layout tabs on the screen, margins, paper background, and so on.

Evaluation Copy. Do not reproduce. For information visit www.cadcim.com

Open and Save

This tab is used to control the parameters related to the opening and saving of files in AutoCAD. You can specify the file type while saving the file using the **SAVEAS** command. The various formats available are **AutoCAD 2018 Drawing (*.dwg)**, **AutoCAD 2013/LT2013 Drawing (*.dwg), AutoCAD 2010/LT2010 Drawing (*.dwg)**, **AutoCAD 2007/LT2007 Drawing (*.dwg)**, **AutoCAD 2004/LT 2004 Drawing (*.dwg)**, **AutoCAD 2000/LT2000 Drawing (*.dwg)**, **AutoCAD R14/LT98/LT97 Drawing (*.dwg)**, **AutoCAD Drawing Template(*.dwt), AutoCAD 2018 DXF(*.dxf), AutoCAD 2013/LT2013 DXF(*.dxf)**, **AutoCAD 2010/LT2010 DXF (*.dxf)**, **AutoCAD 2007/LT2007 DXF (*.dxf)**, **AutoCAD 2004/LT2004 DXF (*.dxf)**, **AutoCAD 2000/LT2000 DXF(*.dxf)**, and **AutoCAD R12/LT2 DXF (*.dxf)**. You can also set various file safety precautions such as the Automatic Save feature or the creation of a backup copy. On selecting the **Display digital signature information** check box, you can view the digital signature information when a file with a valid digital signature is opened. You can change the number of the recently saved files to be displayed in the **File Open** area. You can also set the various parameters for external references and the ObjectARX applications.

Plot and Publish

The options in this tab are used to control the parameters related to plotting and publishing of the drawings in AutoCAD. You can set the default output device and also add a new plotter. You can set the general parameters such as the layout or plot device paper size and the background processing options while plotting or publishing. It is possible to select the spool alert for the system printer and also the OLE plot quality. You can also set the parameters for the plot style such as the color-dependent plot styles or the named plot styles.

System

This tab contains AutoCAD system settings options such as the adjusting graphic performance and pointing device settings options where you can choose the pointing device driver. Here you can also set the display of the **OLE Properties** dialog box and beep for wrong user input. You also have options to set the parameters for database connectivity.

User Preferences

The parameters in this tab are used to control the settings such as the right-click customization to change the shortcut menus according to the user's preferences. You can set the units parameters for the blocks or drawings that are inserted as well as the priorities for various coordinate data entry methods. You can also set the lineweight options.

Drafting

The options in this tab are used to control the settings such as autosnap settings and aperture size. Here you can also set the toggles on and off for the various autotracking settings. Using this tab, you can also set the tool tip appearance of **Dynamic Input** mode in the Model and Paper space.

3D Modeling

This tab is used to control the settings related to 3D modeling such as the display of cursor in the 3D modeling environment, visual styles, 3D navigation, and so on.

Evaluation Copy. Do not reproduce. For information visit www.cadcim.com

Selection

This tab is used to control the methods of object selection, grips, grip colors, and the grip size. You can also set the various selection modes.

Profiles

This tab is used to save and restore the system settings. To save a profile and have different settings, choose the **Add to List** button; the **Add Profile** dialog box will be displayed. Enter the name and description of the profile and then choose the **Apply & Close** button. Next, make the new profile current and then change the settings in each tab. The settings thus applied will be saved in the new profile and can be restored anytime by making the profile current.



Note

*The options in various tabs of the **Options** dialog box have been discussed throughout the book wherever applicable.*



Tip

*Some options in the **Options** dialog box have drawing file icon on their left. For example, the options in the **Display resolution** area of the **Display** tab have drawing file icons. This specifies that these parameters are saved with the current drawing only; therefore, it affects only that drawing. The options without the drawing file icon are saved with the current profile and affect all the drawings present in that AutoCAD session or future sessions.*

Example 7 *Modifying the Default Options*

In this example, you will create a profile with specific settings by using the **Options** dialog box.

1. Choose the **Options** button from the **Application Menu** to invoke the **Options** dialog box. Alternatively, right-click in the drawing area to display the shortcut menu, and then choose **Options** to invoke this dialog box.

2. Choose the **Profiles** tab, and then choose the **Add to List** button to display the **Add Profile** dialog box. Enter **CADCIM** as the name of the new profile and **Profile created for chapter 2, Example 7** as the description of the new profile, and then choose the **Apply & Close** button to exit.

3. Select the **CADCIM** profile and then choose the **Set Current** button to make this profile current. You will notice that the **Current Profile** name above the tabs displays *CADCIM*.

4. Choose the **Display** tab and then choose the **Colors** button; the **Drawing Window Colors** dialog box is displayed. Select **2D model space** in the **Context** area and **Uniform background** in the **Interface element** area. Select **White** from the **Color** drop-down list; the background color of the model tab will change into white. Choose the **Apply & Close** button to return to the **Options** dialog box.

5. Choose the **Drafting** tab and then change **AutoSnap Marker Size** to the maximum using the slider bar. Choose the **Apply** button and then the **OK** button to exit the dialog box.

Evaluation Copy. Do not reproduce. For information visit www.cadcim.com

6. Draw a line and then choose the **Object Snap** button from the Status Bar if not already chosen. Again, invoke the **Line** tool and move the cursor on the previously drawn line; a marker will be displayed at the endpoint. Notice the size of the marker now.

7. Invoke the **Options** dialog box again and choose the **Profiles** tab. Double-click on the default profile to reload the default settings and choose **OK**; the screen settings will change as specified in the default profile.

Self-Evaluation Test

Answer the following questions and then compare them to those given at the end of this chapter:

1. You can erase a previously drawn line by using the _____ option of the **Line** tool.

2. Choose the _____ tool from the **Circle** drop-down to draw a circle that is tangent to two previously drawn objects.

3. The _____ tool is used to enlarge or reduce the view of a drawing without affecting the actual size of entities.

4. After increasing the drawing limits, you need to choose the _____ tool from the Navigator Bar to display the complete area inside the drawing area.

5. In _____ units, you must specify the bearing angle that a line makes with the north-south direction.

6. You can preview a plot before actually plotting it by using the _____ button in the **Plot** dialog box.

7. You can draw a line by specifying the length and direction of the line using the Direct Distance Entry method. (T/F)

8. While using the Window Crossing method of object selection, only those objects that are completely enclosed within the boundaries of the crossing box are selected. (T/F)

9. Choose the **3-Point** tool from the **Circle** drop-down to draw a circle by specifying the two endpoints of the circle's diameter. (T/F)

10. If you choose the engineering or architectural format for units in the **Drawing Units** dialog box, you can enter distances or coordinates in any of the five formats. (T/F)

Evaluation Copy. Do not reproduce. For information visit www.cadcim.com

Review Questions

Answer the following questions:

1. Which of the following keys is not used to terminate the **Line** tool at the **Specify next point or [Close/Undo]:** prompt?

   (a) SPACEBAR (b) BACKSPACE
   (c) ENTER (d) ESC

2. Which of the following tools is used to zoom a drawing up to the limits or the extents, whichever is greater?

   (a) **Zoom Previous** (b) **Zoom Window**
   (c) **Zoom All** (d) **Zoom Realtime**

3. How many formats of units can be chosen from the **Drawing Units** dialog box?

   (a) Three (b) Five
   (c) Six (d) Seven

4. Which of the following input methods cannot be used to invoke the **Options** tool for displaying the **Options** dialog box?

   (a) Menu (b) Toolbar
   (c) Shortcut menu (d) command prompt

5. When you define direction by specifying angle, the output of the angle does not depend on which of the following factors?

   (a) Angular units (b) Angle value
   (c) Angle direction (d) Angle base

6. The _____ option of the **Line** tool can be used to join the current point with the initial point of the first line when two or more lines are drawn in succession.

7. The _____ option of drawing a circle cannot be invoked by entering the command at the command prompt.

8. When you select any type of unit and angle in the **Length** or **Angle** area of the **Drawing Units** dialog box, the corresponding example is displayed in the _____ area of the dialog box.

9. If you want a drawing to be plotted so that it fits on the specified sheet of paper, select the _____ option in the **Plot** dialog box.

10. The _____ tab in the **Options** dialog box is used to store the details of all profiles available in the current drawing.

Evaluation Copy. Do not reproduce. For information visit www.cadcim.com

11. You can use the _____ command to change the settings that affect the drawing environment or the AutoCAD interface.

12. In the relative rectangular coordinate system, the displacements along the X and Y axes (DX and DY) are measured with respect to the previous point and not with respect to the origin. (T/F)

13. In AutoCAD, by default, angles are measured along the positive X axis and it will be positive if measured in the counterclockwise direction. (T/F)

14. You can also invoke the **Plot** dialog box by choosing the **Plot** option from the shortcut menu displayed on right-clicking in the command prompt. (T/F)

15. The **Files** tab of the **Options** dialog box is used to store the directories in which AutoCAD looks for the driver, support, menu, project, template, and other files. (T/F)

Exercise 7 *Relative Rectangular & Absolute Coordinates*

Invoke the **Line** tool and use the following relative rectangular coordinate values to draw the object.

Point	Coordinates
1	3.0, 3.0
2	@3,0
3	@-1.5,3.0
4	@-1.5,-3.0
5	@3.0,5.0
6	@3,0
7	@-1.5,-3
8	@-1.5,3

Exercise 8 *Relative Rectangular & Polar Coordinates*

Draw the profile shown in Figure 2-57 by using the relative rectangular and relative polar coordinates of the points given in the following table. The distance between the dotted lines is 1 unit. Save this drawing with the name *C02_Exer8.dwg*.

Evaluation Copy. Do not reproduce. For information visit www.cadcim.com

Point	Coordinates
1	3.0, 1.0
2	_____
3	_____
4	_____
5	_____
6	_____
7	_____
8	_____

Point	Coordinates
9	_____
10	_____
11	_____
12	_____
13	_____
14	_____
15	_____
16	_____

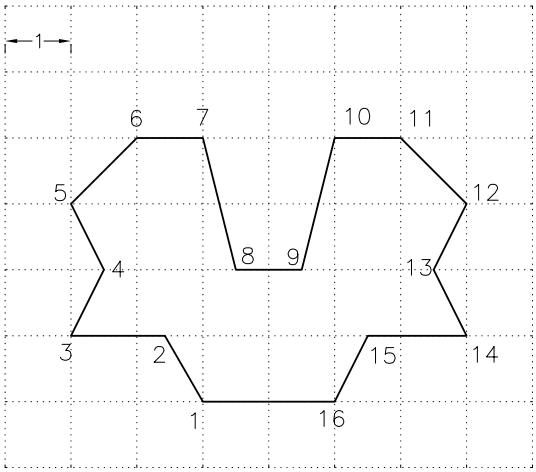

Figure 2-57 *Drawing for Exercise 8*

Exercise 9 — *Relative Polar Coordinates*

For the drawing shown in Figure 2-58, enter the relative polar coordinates of the points in the following table. Next, use these coordinates to create the drawing. Do not dimension the drawing.

Point	Coordinates
1	1.0, 1.0
2	_____
3	_____
4	_____
5	_____

Point	Coordinates
6	_____
7	_____
8	_____
9	_____

Evaluation Copy. Do not reproduce. For information visit www.cadcim.com

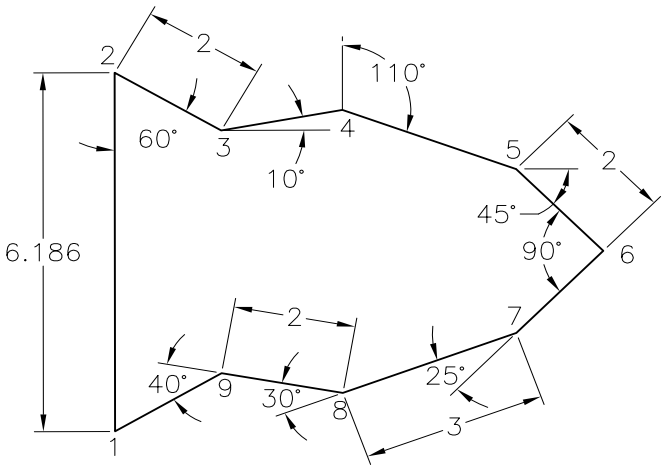

Figure 2-58 *Drawing for Exercise 9*

Exercise 10 *Line and Circle*

Draw the sketch shown in Figure 2-59 by using the **Line** and **Center, Radius** tools. The distance between the dotted lines is 1.0 unit.

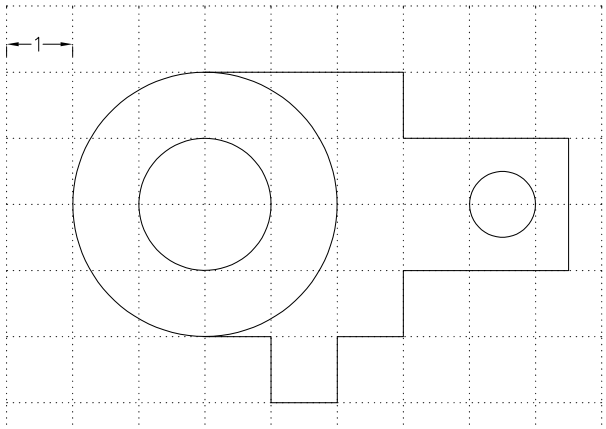

Figure 2-59 *Drawing for Exercise 10*

Evaluation Copy. Do not reproduce. For information visit www.cadcim.com

Exercise 11 *Line and Circle Tangent to Two objects*

Draw the sketch shown in Figure 2-60 using the **Line** and **Tan, Tan, Radius** tools.

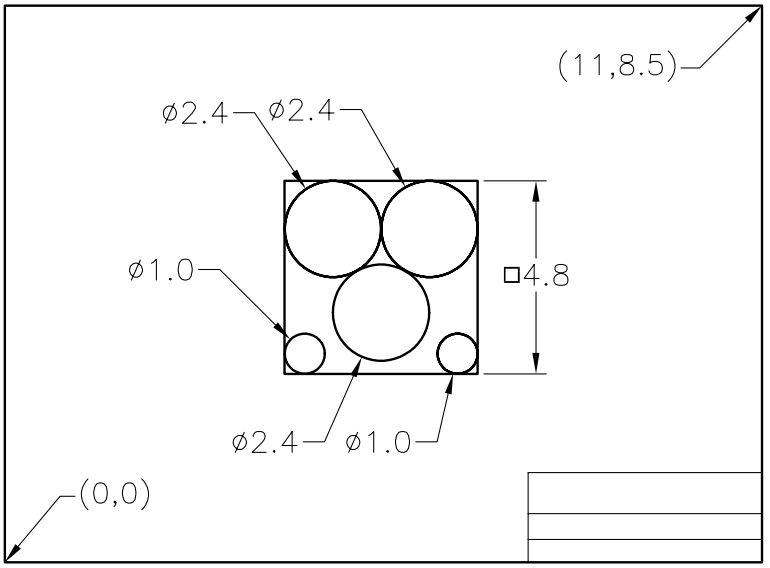

Figure 2-60 *Drawing for Exercise 11*

Exercise 12 *Setting Units*

Set the units for a drawing based on the following specifications.

1. Set the units to architectural with the denominator of the smallest fraction equal to 16.
2. Set the angular measurement to degrees/minutes/seconds with the number of fractional places for the display of angles equal to 0d00'.
3. Set the direction to 0-degree (east) and the direction of measurement of angles to counterclockwise (angles measured positive in counterclockwise direction).

Based on Figure 2-61, determine and set the limits for the drawing. The scale for this drawing is 1/4" = 1'. Leave enough space around the drawing for dimensioning and title block. (HINT: Scale factor = 48 sheet size required is 12 x 9; therefore, the limits are 12 X 48, 9 X 48 = 576, 432. Expand the **Zoom** drop-down and then select the **Zoom All** tool to display the new limits.)

Evaluation Copy. Do not reproduce. For information visit www.cadcim.com

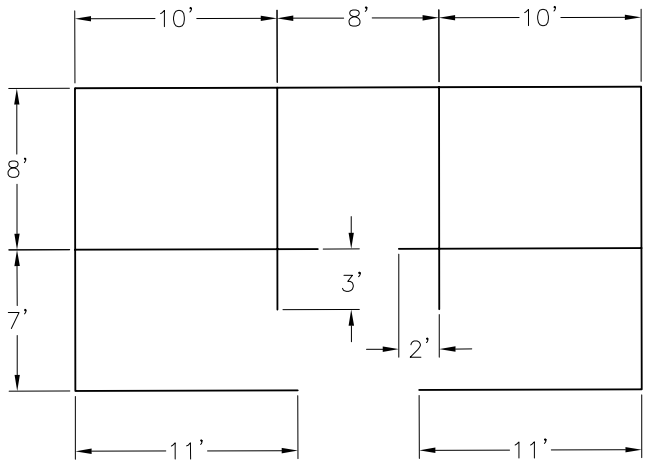

Figure 2-61 *Drawing for Exercise 12*

Exercise 13

Draw the object shown in Figure 2-62. The distance between the dotted lines is 1 unit. Determine the limits for this drawing and use the Decimal units with 0.00 precision.

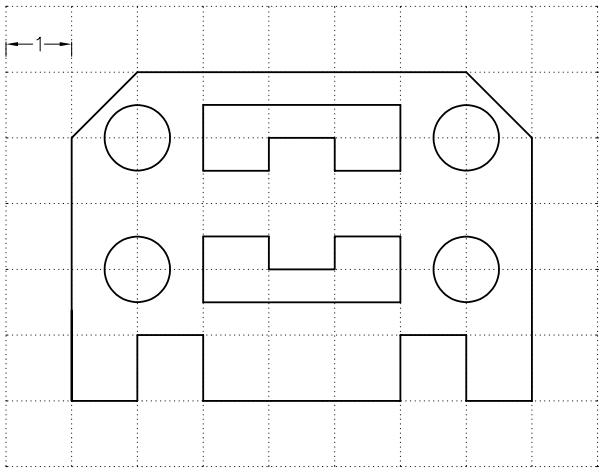

Figure 2-62 *Drawing for Exercise 13*

Exercise 14

Draw the object shown in Figure 2-63. The distance between the dotted lines is 10 feet. Determine the limits for this drawing and use the Engineering units with 0'0.00" precision.

Evaluation Copy. Do not reproduce. For information visit www.cadcim.com

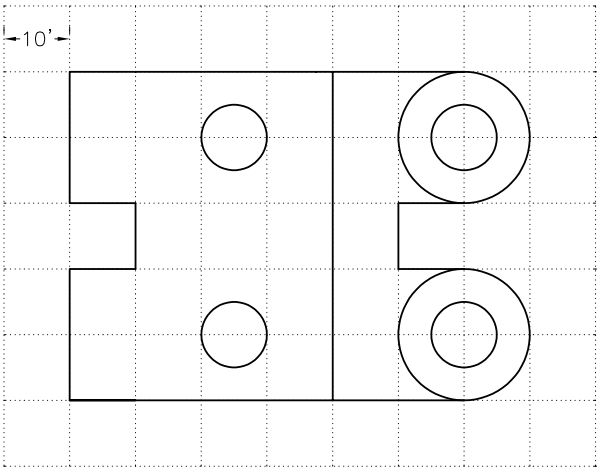

Figure 2-63 *Drawing for Exercise 14*

Problem-Solving Exercise 1

Draw the object shown in Figure 2-64, using the **Line** and **Center, Diameter** tools. In this exercise only the diameters of the circles are given. To draw the lines and small circles (Dia 0.6), you need to find the coordinate points for the lines and the center points of the circles. For example, if the center of concentric circles is at 5,3.5, then the *X* coordinate of the lower left corner of the rectangle will be 5.0 - 2.4 = 2.6.

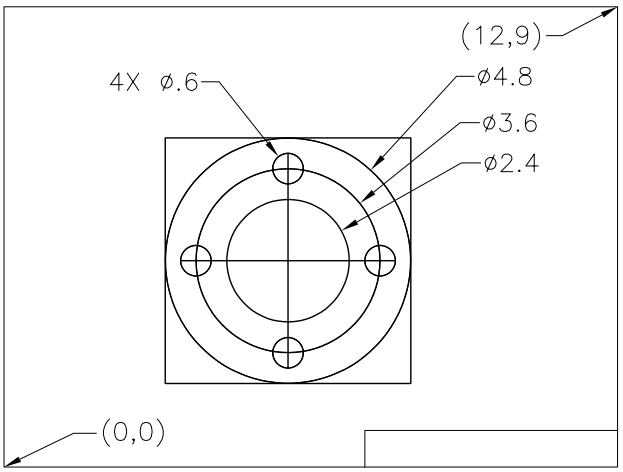

Figure 2-64 *Drawing for Problem-Solving Exercise 1*

Answers to Self-Evaluation Test

1. **Undo**, **2**. **Tan, Tan, Radius**, **3**. **ZOOM**, **4**. **Zoom All**, **5**. Surveyor's, **6**. **Preview**, **7**. T, **8**. F, **9**. F, **10**. T

Evaluation Copy. Do not reproduce. For information visit www.cadcim.com