Table of Contents

Dedication iii
Preface xxi

Chapter 1: Introduction

Introduction to Autodesk Inventor 2021 1-2
Part Module 1-2
Assembly Module 1-2
Presentation Module 1-3
Drawing Module 1-3
Sheet Metal Module 1-3
Mold Design Module 1-3
Getting Started with Autodesk Inventor 1-3
Quick Access Toolbar 1-7
Ribbon and Tabs 1-8
Sketch Tab 1-8
3D Model Tab 1-9
Sheet Metal Tab 1-9
Assemble Tab 1-10
Place Views Tab 1-10
Presentation Tab 1-10
Tools Tab 1-10
View Tab 1-10
Navigation Bar 1-11
Browser Bar 1-11
Search Tool 1-11
Units for Dimensions 1-12
Important Terms and Their Definitions 1-12
Feature-based Modeling 1-12
Parametric Modeling 1-12
Bidirectional Associativity 1-12
Adaptive 1-12
Design Doctor 1-13
Constraints 1-13
Consumed Sketch 1-16
Stress Analysis Environment 1-16
Select Other Behavior 1-17
Hotkeys 1-17
Part Module 1-17
Assembly Module 1-18
Drawing Module 1-18
Customizing Hotkeys 1-19
Creating the Sketch 1-20
Marking Menu 1-21
Color Scheme 1-21

Self-Evaluation Test 1-23
Review Questions 1-23

Chapter 2: Drawing Sketches for Solid Models

The Sketching Environment 2-2
Initial Interface of Autodesk Inventor 2-2
Starting a New File 2-4
The Open Dialog Box 2-5
Setting a New Project 2-7
Import DWG 2-8
Invoking the Sketching Environment 2-8
Introduction to the Sketching Environment 2-8
Setting Up the Sketching Environment 2-9
Modifying the Document Settings of a Sketch 2-9
Sketching Entities 2-11
Positioning Entities by Using Dynamic Input 2-11
Drawing Lines 2-12
Drawing Circles 2-15
Drawing Ellipses 2-16
Drawing Arcs 2-17
Drawing Rectangles 2-19
Drawing Polygons 2-21
Drawing Slots 2-22
Placing Points 2-25
Creating Fillets 2-25
Creating Chamfers 2-26
Drawing Splines 2-27
Deleting Sketched Entities 2-29
Finishing a Sketch 2-30
Understanding the Drawing Display Tools 2-30
Zoom All 2-30
Zoom 2-31
Zoom Window 2-31
Zoom Selected 2-31
Pan 2-31
Orbit 2-32
Constrained Orbit 2-32
Tutorial 1 2-33
Tutorial 2 2-38
Tutorial 3 2-42
Tutorial 4 2-46
Self-Evaluation Test 2-50
Review Questions 2-50
Exercise 1 2-51
Exercise 2 2-52
Exercise 3 2-53
Exercise 4 2-53

Evaluation Copy. Do not reproduce. For information visit www.cadcim.com

Chapter 3: Adding Constraints and Dimensions to Sketches

Adding Geometric Constraints to a Sketch 3-2
- Perpendicular Constraint 3-2
- Parallel Constraint 3-2
- Tangent Constraint 3-3
- Coincident Constraint 3-3
- Concentric Constraint 3-3
- Collinear Constraint 3-4
- Horizontal Constraint 3-4
- Vertical Constraint 3-4
- Equal Constraint 3-5
- Fix Constraint 3-5
- Symmetric Constraint 3-5
- Smooth Constraint 3-6

Viewing the Constraints Applied to a Sketched Entity 3-6
Controlling Constraints and Applying them Automatically while Sketching 3-7
- Constraints Settings Dialog Box 3-7
- Scope of Constraint Inference 3-8

Deleting Geometric Constraints 3-9
Adding Dimensions to Sketches 3-9
- Linear Dimensioning 3-10
- Aligned Dimensioning 3-11
- Angular Dimensioning 3-12
- Diameter Dimensioning 3-14
- Radius Dimensioning 3-15
- Linear Diameter Dimensioning 3-16

Setting the Scale of a Sketch 3-17
Creating Driven Dimensions 3-18
Understanding the Concept of Fully-Constrained Sketches 3-18
Measuring Sketched Entities 3-19
- Measuring Distances 3-19
- Measuring the Radius of Arc or the Diameter of a Circle 3-20
- Measuring Angles 3-21
- Measuring Loops 3-22
- Measuring the Area 3-22
- Evaluating Region Properties 3-23

Tutorial 1 3-24
Tutorial 2 3-28
Tutorial 3 3-33
Tutorial 4 3-39
Self-Evaluation Test 3-42
Review Questions 3-43
Exercise 1 3-44
Exercise 2 3-44
Exercise 3 3-45
Exercise 4 3-45
Exercise 5 3-46
Exercise 6 3-46

Evaluation Copy. Do not reproduce. For information visit www.cadcim.com

Chapter 4: Editing, Extruding, and Revolving the Sketches

Editing Sketched Entities		4-2
Extending Sketched Entities		4-2
Trimming Sketched Entities		4-2
Splitting Sketched Entities		4-3
Offsetting Sketched Entities		4-4
Mirroring Sketched Entities		4-5
Moving Sketched Entities		4-7
Rotating Sketched Entities		4-9
Creating Patterns		4-11
Creating Rectangular Patterns	Enhanced	4-11
Creating Circular Patterns	Enhanced	4-15
Writing Text in the Sketching Environment		4-17
Writing Regular Text		4-17
Writing Text Aligned to a Geometry		4-20
Inserting Images and Documents in Sketches		4-22
Editing Sketched Entities by Dragging		4-23
Tolerances		4-23
Converting the Base Sketch into a Base Feature		4-25
Extruding the Sketch		4-26
Revolving the Sketch		4-30
Manipulators		4-31
Rotating the View of a Model in 3D Space		4-33
Rotating the View of a Model Using the Orbit		4-33
Changing the View Using the ViewCube		4-34
Navigating the Model		4-37
Controlling the Display of Models		4-38
Setting the Visual Styles		4-38
Setting the Shadow Options		4-40
Setting the Camera Type		4-41
Creating Freeform Shapes		4-42
Creating Predefined Solid Primitives		4-45
Tutorial 1		4-47
Tutorial 2		4-51
Tutorial 3		4-54
Tutorial 4		4-58
Self-Evaluation Test		4-60
Review Questions		4-61
Exercise 1		4-62
Exercise 2		4-63
Exercise 3		4-63
Exercise 4		4-64
Exercise 5		4-64
Exercise 6		4-65

Evaluation Copy. Do not reproduce. For information visit www.cadcim.com

Chapter 5: Other Sketching and Modeling Options

Need for other Sketching Planes 5-2
Work Features 5-3
Creating Work Planes 5-3
Creating Work Axes 5-13
Creating Work Points 5-17
Other Extrusion Options 5-21
Other Revolution Options 5-27
The Concept of Sketch Sharing 5-28
Tutorial 1 5-30
Tutorial 2 5-35
Tutorial 3 5-40
Self-Evaluation Test 5-45
Review Questions 5-45
Exercise 1 5-47
Exercise 2 5-48
Exercise 3 5-49
Exercise 4 5-49

Chapter 6: Advanced Modeling Tools-I

Advanced Modeling Tools 6-2
Creating Holes 6-2
Creating Fillets 6-11
Creating Chamfers 6-21
Mirroring Features and Models 6-25
Creating Rectangular Patterns 6-27
Creating Circular Patterns 6-30
Creating Sketch Driven Patterns 6-33
Creating Rib Features 6-34
Thickening or Offsetting the Faces of Features Enhanced 6-38
Creating the Embossed and Engraved Features 6-42
Applying Images on a Feature Enhanced 6-44
Assigning Different Colors/Styles to a Model 6-46
Assigning Different Material to a Model 6-46
Modifying the Properties of an Existing Material 6-47
Tutorial 1 6-48
Tutorial 2 6-54
Tutorial 3 6-60
Tutorial 4 6-67
Tutorial 5 6-71
Self-Evaluation Test 6-78
Review Questions 6-78
Exercise 1 6-79
Exercise 2 6-80
Exercise 3 6-82

Evaluation Copy. Do not reproduce. For information visit www.cadcim.com

Chapter 7: Editing Features and Adding Automatic Dimensions to Sketches

Concept of Editing Features 7-2
- Editing Features of a Model 7-2
- Updating Edited Features 7-3
- Editing Features Dynamically by Using 3D Grips 7-4
- Editing the Sketches of Features 7-5
- Redefining the Sketching Plane of a Sketched Feature 7-8

Suppressing and Unsuppressing the Features 7-8
Editing of a Feature Using the Direct Tool 7-9
Deleting Features 7-11
Copying and Pasting Features 7-11
Manipulating Features by EOP 7-14
Adding Automatic Dimensions to Sketches 7-14
Projecting Entities in the Sketching Environment 7-15
- Projecting Edges or Faces 7-16
- Projecting Cutting Edges 7-17
- Projecting 2D Sketch on 3D Face 7-17
- Projecting DWG Geometry 7-18

Tutorial 1 7-19
Tutorial 2 7-25
Tutorial 3 7-30
Self-Evaluation Test 7-36
Review Questions 7-37
Exercise 1 7-38
Exercise 2 7-39
Exercise 3 7-40
Exercise 4 7-41
Exercise 5 7-41

Chapter 8: Advanced Modeling Tools-II

Advanced Modeling Tools 8-2
- Creating Sweep Features 8-2
- Creating Lofted Features 8-11
- Creating Coil Features Enhanced 8-21
- Creating Threads 8-25
- Creating Shell Features 8-28
- Applying Drafts 8-30
- Creating Split Features Enhanced 8-33
- Trimming Surfaces 8-35
- Extending Surfaces 8-37
- Deleting Faces Enhanced 8-38
- Replacing Faces with Surfaces 8-39
- Creating Planar Boundary Patches 8-41
- Stitching Surfaces 8-43
- Working with the Sculpt Tool 8-44
- Working with the Bend Part Tool 8-45

Evaluation Copy. Do not reproduce. For information visit www.cadcim.com

Reordering the Features Enhanced 8-48
Understanding the Parent-Child Relationship 8-49
Using the Sketch Doctor 8-50
Using the Design Doctor 8-51
Tutorial 1 8-52
Tutorial 2 8-57
Tutorial 3 8-59
Tutorial 4 8-62
Self-Evaluation Test 8-65
Review Questions 8-66
Exercise 1 8-67
Exercise 2 8-68

Chapter 9: Assembly Modeling-I

Assembly Modeling 9-2
Types of Assemblies 9-2
    Top-down Assemblies 9-2
    Bottom-up Assemblies 9-3
Creating Top-down Assemblies 9-3
    Creating Components in the Assembly Module 9-4
Creating Bottom-Up Assemblies 9-6
    Placing Components in the Assembly File 9-7
Assembling Components by Using the Constrain Tool 9-8
    Assembly Tab 9-8
    Motion Tab 9-16
    Transitional Tab 9-19
    Constraint Set Tab 9-19
Specifying the Limits for Constraining 9-20
Assembling Parts by Using the Assemble Tool 9-20
Using ALT+Drag to Apply Assembly Constraints 9-22
Applying Joints to the Assembly 9-22
    Joint Tab 9-22
    Limits Tab 9-27
Showing and Hiding Relationships 9-28
    Show Relationship 9-28
    Hide Relationship 9-28
    Show Sick Relationship 9-28
Moving Individual Components 9-29
Rotating Individual Components in 3D Space 9-29
Tutorial 1 9-29
Tutorial 2 9-48
Tutorial 3 9-57
Tutorial 4 9-68
Self-Evaluation Test 9-79
Review Questions 9-79
Exercise 1 9-80

Evaluation Copy. Do not reproduce. For information visit www.cadcim.com

Chapter 10: Assembly Modeling-II

Editing Assembly Constraints 10-2
Editing Components 10-2
Editing Components in the Assembly File 10-2
Editing Components by Opening their Part Files 10-4
Creating Subassemblies 10-4
Creating a Subassembly Using the Bottom-up Design Approach 10-4
Creating a Subassembly Using the Top-down Design Approach 10-5
Checking Degrees of Freedom of a Component 10-5
Creating Pattern of Components in an Assembly 10-6
Replacing a Component from the Assembly File with Another Component 10-9
Replacing a Single Instance of the Selected Component 10-9
Replacing all Instances of the Selected Component 10-10
Mirroring Subassemblies or Components of an Assembly 10-11
Copying Subassemblies or Components of an Assembly 10-14
Deleting Components 10-15
Editing the Pattern of Components 10-15
Making a Pattern Instance Independent 10-16
Deleting Assembly Constraints 10-16
Creating Assembly Section Views in the Assembly File 10-17
Analyzing Assemblies for Interference 10-18
Creating Design View Representations 10-19
Design View Representation Area 10-20
Positional Representation Area 10-21
Level of Detail Representation 10-21
Simulating the Motion of Components of an Assembly by Driving Assembly Constraint 10-21
Creating Positional Representations 10-25
Viewing the Bill of Material of the Current Assembly 10-25
Working with Assembly Features 10-27
Tutorial 1 10-27
Tutorial 2 10-29
Tutorial 3 10-31
Self-Evaluation Test 10-38
Review Questions 10-39
Exercise 1 10-40

Chapter 11: Working with Drawing Views-I

The Drawing Module 11-2
Types of Views 11-3
Generating Drawing Views 11-5
Generating the Base View 11-5
Generating Projected Views 11-12
Generating Auxiliary Views 11-13
Generating Section Views 11-14
Generating Detail Views 11-16
Generating Broken Views 11-18

Evaluation Copy. Do not reproduce. For information visit www.cadcim.com

Generating Break Out Views 11-20
Generating Overlay Views 11-22
Generating Slice Views 11-23
Drafting Drawing Views 11-24
Editing Drawing Views 11-25
Deleting Drawing Views and Drawing Sheet 11-25
Moving Drawing Views 11-27
Copying Drawing Views 11-27
Rotating Drawing Views 11-28
Changing the Orientation of Drawing Views 11-29
Assigning Different Hatch Patterns to Components in Assembly Section Views 11-30
Editing the Default Hatch Style of the Sectioned Objects 11-32
Excluding Components from Assembly Section Views 11-34
Tutorial 1 11-35
Tutorial 2 11-40
Self-Evaluation Test 11-45
Review Questions 11-46
Exercise 1 11-47

Chapter 12: Working with Drawing Views-II

Modifying Drawing Standards 12-2
Inserting Additional Sheets into Drawing 12-3
Activating a Drawing Sheet 12-3
Displaying Dimensions in Drawing Views 12-3
Retrieving Parametric Dimensions in Drawing Views 12-4
Adding Reference Dimensions 12-5
Modifying the Model Dimensions 12-5
Editing Drawing Sheets 12-6
Creating Dimension Styles 12-7
Applying Dimension Styles 12-8
Modifying a Dimension and its Appearance Using the Shortcut Menu 12-9
Adding the Parts List 12-9
Source Area 12-10
BOM Settings and Properties Area 12-10
Table Wrapping Area 12-11
Editing the Parts List 12-12
Column Chooser 12-13
Group Settings 12-13
Filter Settings 12-14
Sort 12-14
Export 12-14
Table Layout 12-14
Renumber Item 12-14
Save Item Overrides to BOM 12-15
Member Selection 12-15
Adding/Removing Custom Parts 12-15
Shortcut Menu Options 12-15
Setting the Standard for the Parts List 12-15

Evaluation Copy. Do not reproduce. For information visit www.cadcim.com

Adding Balloons to Assembly Drawing Views 12-16
Adding Balloons to Selected Components 12-17
Adding Automatic Balloons 12-17
Adding Text to a Drawing Sheet 12-20
Adding Multiline Text without a Leader 12-20
Adding Multiline Text with Leader 12-21
Tutorial 1 12-22
Tutorial 2 12-26
Tutorial 3 12-32
Self-Evaluation Test 12-36
Review Questions 12-37
Exercise 1 12-38

Chapter 13: Presentation Module

The Presentation Module 13-2
Inserting Assembly in the Presentation Module 13-3
Animating an Assembly 13-5
Tweaking Components in the Presentation Module 13-6
Changing the Opacity of a Component 13-8
Editing the Tweaked components 13-8
Creating Snapshot Views in a Presentation 13-9
Editing Snapshot View 13-10
Defining Units in the Presentation Files 13-10
Creating Storyboard 13-10
Creating Drawing Views of the Snapshot View 13-10
Creating Video of the Presentation Files 13-12
Creating Raster Images of the Presentation Files 13-13
Tutorial 1 13-15
Tutorial 2 13-21
Self-Evaluation Test 13-26
Review Questions 13-27
Exercise 1 13-28

Chapter 14: Working with Sheet Metal Components

The Sheet Metal Module 14-2
Setting Sheet Metal Component Parameters 14-4
Setting the Sheet Metal Rule 14-4
Setting the Material 14-12
Setting the Unfolding Rule 14-13
Creating Sheet Metal Components 14-15
Folding Sheet Metal Components 14-19
Adding Flanges to Sheet Metal Components 14-21
Creating Cuts in Sheet Metal Components 14-25
Creating Seams at the Corners of Sheet Metal Components 14-27
Bending the Faces of a Sheet Metal Component 14-31
Rounding the Corners of Sheet Metal Components 14-33

Evaluation Copy. Do not reproduce. For information visit www.cadcim.com

Chamfering the Corners of Sheet Metal Components 14-35
Punching 3D Shapes into Sheet Metal Components 14-36
Creating Hems 14-38
Creating Contour Flanges 14-40
Creating the Flat Patterns of Sheet Metal Components 14-43
Adding or Removing Material from the Flat Pattern 14-44
Tutorial 1 14-45
Tutorial 2 14-52
Self-Evaluation Test 14-58
Review Questions 14-59
Exercise 1 14-59

Chapter 15: Introduction to Stress Analysis

Introduction to FEA 15-2
Types of Engineering Analysis 15-3
Structural Analysis 15-3
Thermal Analysis 15-4
Fluid Flow Analysis 15-5
Electromagnetic Field Analysis 15-5
Coupled Field Analysis 15-5
General Procedure to Conduct Finite Element Analysis 15-5
FEA through Software 15-6
Important Terms and Definitions 15-7
Stress Analysis Using Autodesk Inventor Professional 15-10
Creating Study 15-10
Using the Guide Tool 15-13
Applying Stress Analysis Settings 15-13
Study Browser Bar 15-14
Assigning Material 15-14
Assign Material 15-15
Applying Constraints 15-16
Fixed Constraint 15-17
Pin Constraint 15-18
Frictionless Constraint 15-18
Applying Loads 15-19
Force 15-19
Pressure 15-20
Bearing Load 15-21
Moment 15-21
Gravity 15-22
Remote Force 15-23
Body 15-23
Meshing the Component 15-24
Mesh View 15-24
Mesh Settings 15-24
Local Mesh Control 15-26
Convergence Settings 15-27

Evaluation Copy. Do not reproduce. For information visit www.cadcim.com

Solution Phase of Analysis 15-27
Postprocessing the Solutions 15-28
Generating Report 15-28
Animating the Results 15-29
Tutorial 1 15-29
Tutorial 2 15-34
Tutorial 3 15-39
Self-Evaluation Test 15-47
Review Questions 15-48
Exercise 1 15-48
Exercise 2 15-49

CHAPTERS AVAILABLE FOR FREE DOWNLOAD

In this textbook, four chapters been given for free download. You can download these chapters from our website **www.cadcim.com**. To download the chapters, click on *Textbooks > CAD/CAM > Autodesk Inventor > Autodesk Inventor Professional 2021 for Designers > Chapters for Free Download* and then select the chapter name from the **Chapters for Free Download** drop-down. Click the **Download** button to download the chapter in the PDF format.

Chapter 16: Introduction to Weldments

Understanding Weldment Assemblies 16-2
Main Types of Welds in Autodesk Inventor Professional 16-3
Cosmetic Welds 16-3
Fillet Welds 16-4
Groove Welds 16-4
Adding Welds to Assemblies 16-5
Assembling the Components of Weldment Assemblies 16-5
Preparing Assemblies for Weldments 16-5
Adding Welds 16-6
Creating Fillet Welds 16-6
Creating Cosmetic Welds 16-8
Creating Groove Welds 16-9
Creating Symbols 16-11
Generating Report 16-12
Tutorial 1 16-13
Tutorial 2 16-17
Self-Evaluation Test 16-22
Review Questions 16-23
Exercise 1 16-23

Chapter 17: Miscellaneous Tools

Introduction 17-2
Copying the Sketches 17-2
Scaling the Sketches 17-3
Finding the Center of Gravity 17-3

Evaluation Copy. Do not reproduce. For information visit www.cadcim.com

Extracting the iFeature 17-4
Inserting the iFeature 17-6
Creating iMates 17-7
Applying iMates in the Assembly Environment 17-9
Interactively place with iMates 17-9
Automatically generate iMates on place 17-9
Viewing the iProperties 17-9
Creating User-Defined Drawing Sheets 17-11
Importing AutoCAD Blocks into Inventor 17-17
Tutorial 1 17-20
Tutorial 2 17-26
Self-Evaluation Test 17-30
Review Questions 17-30
Exercise 1 17-31

Chapter 18: Working with Special Design Tools

Adaptive Parts 18-2
Defining Parameters 18-2
Working with iParts 18-7
Types of iPart Factories 18-7
Creating iPart Factories 18-7
Procedure to Create Standard iPart 18-15
Procedure to Create Custom iPart 18-15
Inserting an iPart into an Assembly 18-15
Changing the iParts in the Assembly File 18-18
Creating 3D Sketches 18-19
Line 18-19
Spline 18-19
Bend 18-19
Include Geometry 18-19
Intersection Curve 18-19
Helical Curve 18-20
Tutorial 1 18-21
Tutorial 2 18-26
Tutorial 3 18-32
Tutorial 4 18-36
Tutorial 5 18-39
Self-Evaluation Test 18-47
Review Questions 18-48
Exercise 1 18-49

Chapter 19: Introduction to Plastic Mold Design

Introduction to Plastic Mold Design 19-2
Invoking the Mold Environment 19-2
Methods of Designing Core and Cavity 19-3
Importing Plastic Part in Mold Environment 19-3

Evaluation Copy. Do not reproduce. For information visit www.cadcim.com

Adding Core and Cavity by using Individual Models 19-5
Adjusting Orientation and Position of a Part 19-6
Adjusting Orientation of the Part 19-6
Adjusting Position of the Part 19-7
Selecting Material 19-8
Commonly used materials 19-9
Specific Material 19-9
Details 19-10
Report 19-11
Creating Core and Cavity for the Part 19-12
Adjusting Orientation 19-12
Specifying Gate Location 19-12
Settings for the Process 19-16
Analyzing Part for Filling 19-17
Specifying Shrinkage Allowance 19-18
Defining Workpiece 19-20
Creating Patching Surface 19-22
Creating Planar Patches 19-23
Creating Runoff Surface 19-23
Generating Core and Cavity 19-24
Creating Pattern of the Mold 19-27
Creating a Rectangular Pattern 19-27
Creating a Circular Pattern 19-27
Creating a Variable Pattern 19-28
Creating Runner of the Mold 19-29
Creating Runner Sketch 19-29
Creating Runner 19-31
Creating Gates for the Molds 19-32
Adding Cold Wells 19-34
Adding Mold Base to the Assembly 19-34
Standard Area 19-35
Placement Area 19-36
Layout Information Area 19-36
Adding Sprue Bushing 19-37
Adding Cooling Channel 19-38
Generating Drawing Views 19-39
Tutorial 1 19-40
Self-Evaluation Test 19-61
Review Questions 19-62
Exercise 1 19-62

Evaluation Copy. Do not reproduce. For information visit www.cadcim.com

PROJECTS AVAILABLE FOR FREE DOWNLOAD

In this textbook, four projects are available for free download. Project-1 contains step-by-step instructions. You can download these projects from our website **www.cadcim.com**. To download these projects, follow the path: *Textbooks > CAD/CAM > Autodesk Inventor > Autodesk Inventor Professional 2021 for Designers > Projects for free download* and then select the project name from the **Projects for Free Download** drop-down. Click the **Download** button to download the project in the PDF format.

Note

For additional projects, visit **www.cadcim.com** and follow the path: *Textbooks > CAD/CAM > Parametric Solid Modeling > Parametric Solid Modeling Projects*

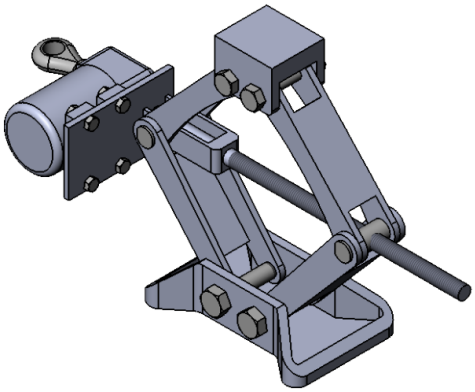

Project 1: Car Jack Assembly

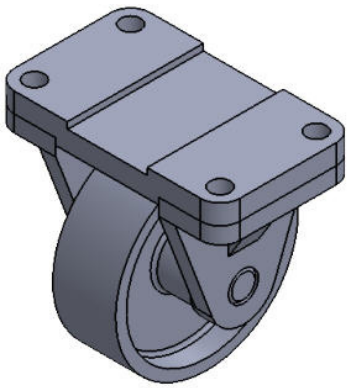

Project 2: Wheel Assembly

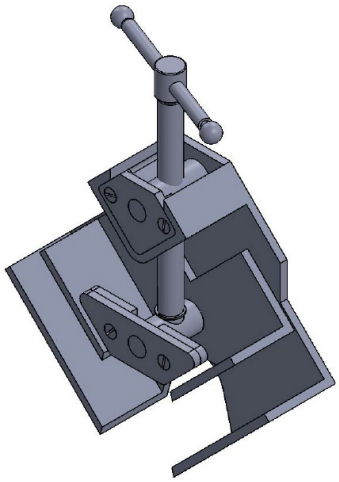

Project 3: Angle Clamp Assembly

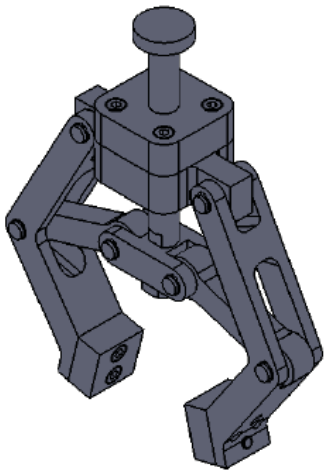

Project 4: Pneumatic Gripper Assembly