Chapter 21

Introduction to Mold Design

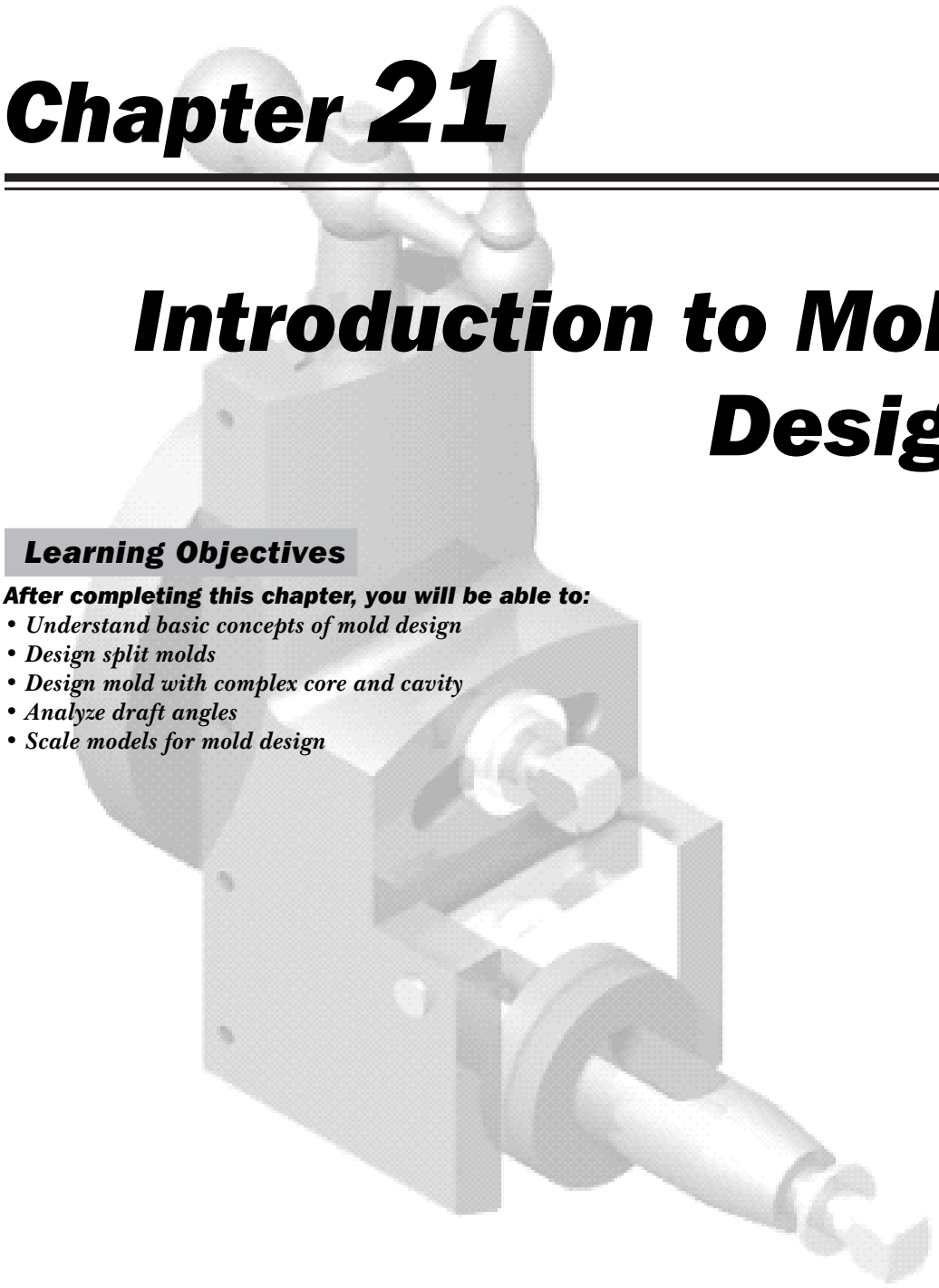

Learning Objectives

After completing this chapter, you will be able to:

- *Understand basic concepts of mold design*
- *Design split molds*
- *Design mold with complex core and cavity*
- *Analyze draft angles*
- *Scale models for mold design*

INTRODUCTION TO MOLD DESIGN

In this chapter, you will learn about the tools that you can use to design molds for a cast or plastic molded component. Generally, the complete mold designing consists of designing of mold base, gates and runners, ejection mechanism, and core and cavity. But in the mold design using SOLIDWORKS, you will only learn about designing of core and cavity which means extraction of core and cavity from a part created. You will also learn about creating inserts for extracting the core and cavity of complex parts. Figure 21-1 shows a soap case created in the **Part** mode of SOLIDWORKS. Figure 21-2 shows the core for manufacturing this part and Figure 21-3 shows the respective cavity.

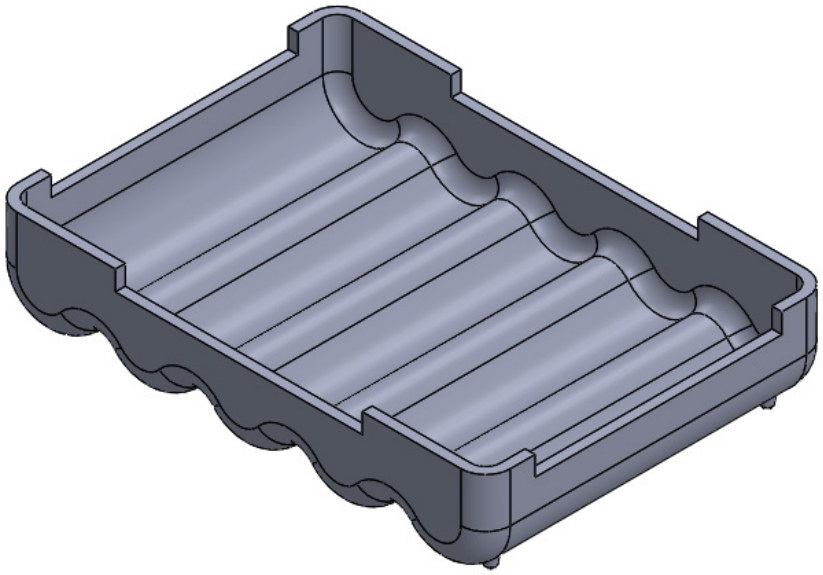

Figure 21-1 *Soap case created in the part mode of SOLIDWORKS*

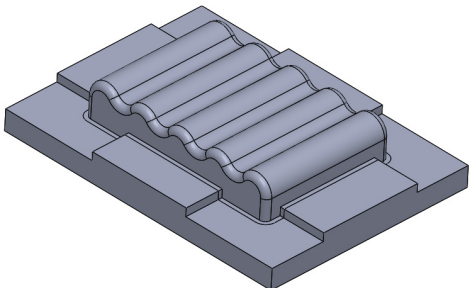

Figure 21-2 *Core of the mold for manufacturing*

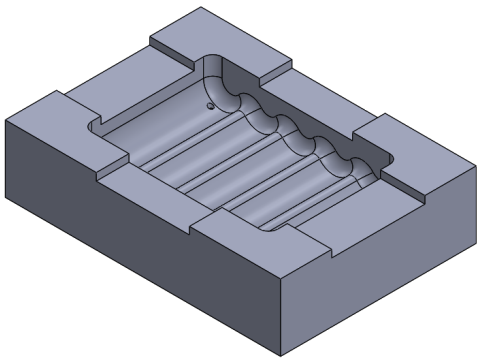

Figure 21-3 *Cavity of the mold for manufacturing*

Before you learn about mold design, it is necessary that you first learn about some of the major terms and definitions related to mold design.

MOLD ASSEMBLY

Mold assembly is an assembly created by assembling a number of parts such as top plate, back plate, core back plate, cavity back plate, ejector mechanism, guide bushes, guide pillars, fasteners, cooling mechanism, and so on. The complete mold is designed by considering the part to be molded and the design depends on the complexity of the part. Some of the elements mentioned above are discussed next.

Cavity

The cavity is the female part of the mold and remains hollow from inside. The molten metal or the molten plastic is poured into it so that it can take the shape of the cavity to create the component.

Core

The core is the male part of the mold and it defines the area where the molten metal should not reach. The core generally helps in defining the holes, pockets, and other cut out features of a part while molding.

Parting Line

Parting line is a line from where the molds split and open in their respective directions. Figure 21-4 shows an assembly of core and cavity with the parting line. Figure 21-5 shows the exploded view of the core and cavity assembly with the component that will be created using this combination of core and cavity.

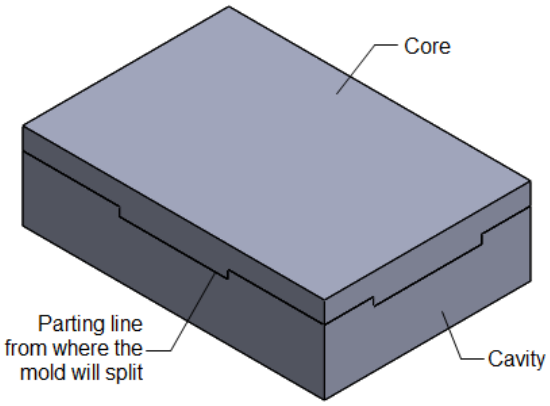

Figure 21-4 *Assembly of core and cavity with the parting line*

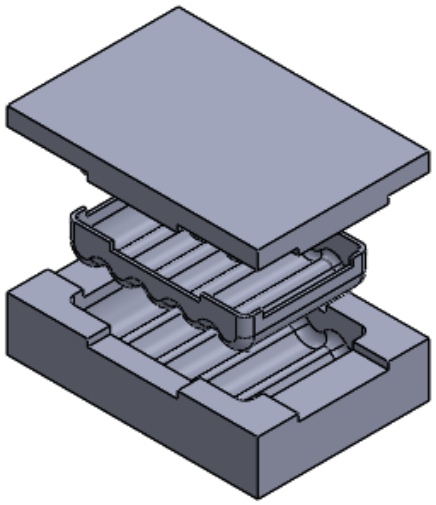

Figure 21-5 *Exploded view of the core and cavity assembly*

Scale factor

Scale factor is defined as the amount by which the molded or cast component shrinks depending on the type of material and the shape of the mold. The scale factor is defined in terms of percentage.

Draft Angle

In the molded or cast component, the draft angles are of great importance. It is very important to add draft angle to the core and cavity because if the faces of the core and cavity do not have any draft angle, then you cannot take out the molded or cast component from the mold. Therefore, it is very important that you should add the required draft angles to the component in the Part mode so that the same draft is also added in the core and cavity.

MOLD DESIGNING USING SOLIDWORKS

In SOLIDWORKS, there are two methods of designing the mold. The first method is generally used to design the split molds and the second method is generally used to design the molds that have core and cavity. Both the methods of designing the core and cavity are discussed next.

Designing a Split Mold

In technical terms, a simple mold consisting of two cavities is called a split mold. For designing this type of mold, you first need to create the part for which you want to design the mold. Figure 21-6 shows a part whose mold is to be designed. Next, you need to create the mold base which is generally an extruded cube or cuboid. Figure 21-7 shows the mold base. The over all dimensions of the mold base are greater than the part. The dimensions of the mold base depend on the size of the part, injection pressure of the molten metal, temperature of the molten metal, and so on.

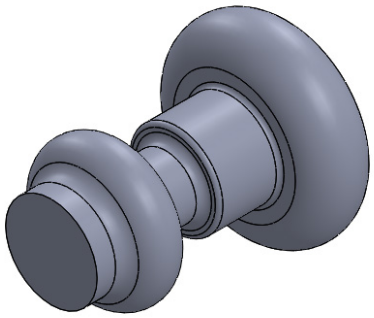

Figure 21-6 *Part whose mold is to be designed*

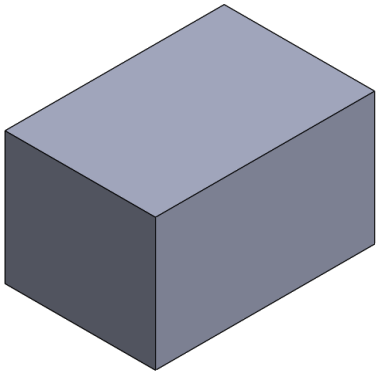

Figure 21-7 *Mold base*

The following steps are required to create a split mold:

1. Creating an interim assembly
2. Creating the cavity in the Mold base
3. Creating the derived component

Creating the Interim Assembly

After creating the part and the mold base, you need to create an interim assembly in which you will assemble the part with the mold base. Create a new assembly file and save it. Now, place the mold base in the assembly file. Select the mold base from the **FeatureManager Design Tree** and choose the **Change Transparency** option from the shortcut menu displayed on right-clicking;

a transparent mold base will be displayed. Now, place the part in the assembly and assemble it using the assembly mates such that the part is placed in the middle of the mold base. Figure 21-8 shows the part placed in the middle of the mold base.

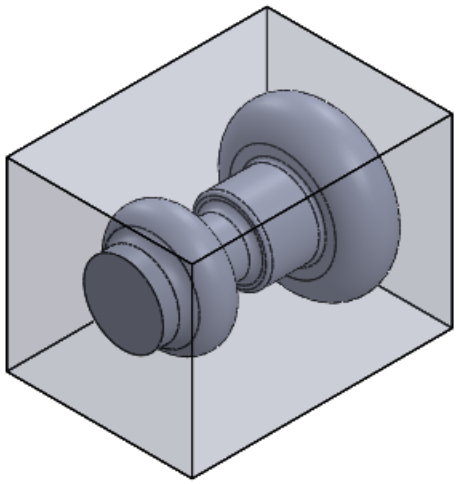

Figure 21-8 *Part placed and assembled in the middle of the mold base*

Creating the Cavity

CommandManager:	Mold Tools > Cavity *(Customize to add)*
SOLIDWORKS menus:	Insert > Molds > Cavity
Toolbar:	Mold Tools > Cavity *(Customize to add)*



After assembling the part with the mold base, you need to create the cavity in the mold base. The cavity is created using the **Cavity** tool. To create a cavity, select the mold base and choose the **Edit Component** button from the **Assembly CommandManager**; the Part modeling environment will be invoked for the mold base part. Now, choose the **Cavity** button from the **Mold Tools** toolbar. If the **Mold Tools** toolbar is not available, choose **View > Toolbars > Mold Tools** from the SOLIDWORKS menus to display this toolbar. When you invoke the **Cavity** tool, the **Cavity PropertyManager** will be displayed, as shown in Figure 21-9. After invoking the **Cavity** tool, select the part from the **FeatureManager Design Tree**. The name of the selected part is displayed in the **Design Component Parts** selection box. After selecting the component, you need to define scale factor for mold cavity. The scale factor is defined to create a cavity larger than the part. This is done because after solidification, the resultant component shrinks. Since the **Uniform scaling** check box is selected in the **Scale Parameters** rollout, the cavity will be scaled uniformly. Using the **Scaling %** spinner, set the value of the scale factor. If you need to apply a nonuniform scaling to the cavity, then clear the **Uniform scaling** check box. The **X**, **Y**, and **Z** spinners are displayed to specify the different scale factors in all the axes.

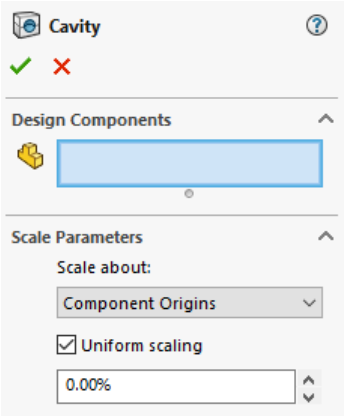

Figure 21-9 *The* ***Cavity PropertyManager***

The options available in the **Scale about** drop-down list in the **Scale Parameters** rollout are used to define the origin about which you need to scale the cavity. After setting all the parameters, choose the **OK** button from the **Cavity PropertyManager**. You will observe that a **Cavity1** feature is displayed in the **FeatureManager Design Tree**. Choose the **Edit Component** button from the **Assembly CommandManager** to return to the assembly environment.

Creating the Derived Component

After creating the cavity in the mold base, you need to create the derived component of the mold base that will be used to create the cavity. To create the derived component, select the mold base from the **FeatureManager Design Tree** and choose **File > Derive Component Part** from the SOLIDWORKS menus; the **Insert Part PropertyManager** is displayed. Choose the **OK** button to insert the part at the origin; a new part file will be created that contains the mold base with the cavity created inside the mold base. Since the mold base is displayed shaded, therefore, you first need to change the model display to Wireframe. The derived component after changing the model display state is shown in Figure 21-10.

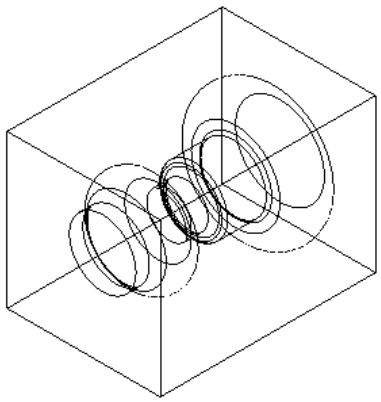

Figure 21-10 *Derived part with the model display set to Wireframe*

Select the front face of the derived component and invoke the sketching environment. Create a single line sketch, as shown in Figure 21-11.

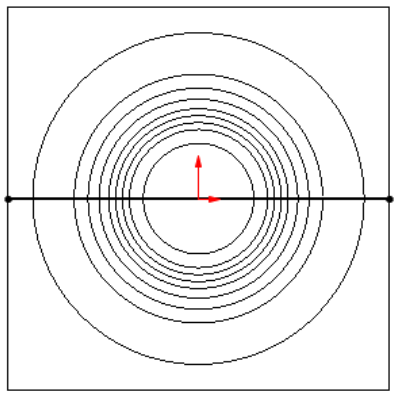

Figure 21-11 *Sketch for creating the cut feature*

Save the derived part and choose **Insert > Molds > Split** from the SOLIDWORKS menus; the **Split PropertyManager** will be displayed, as shown in Figure 21-12. The earlier drawn sketch will be automatically selected in the **Trimming Surfaces** selection box in the **Trim Tools** rollout. Choose the **Cut Part** button to split the mold base. This creates the top and bottom plates of the split mold. Choose the **Auto-assign Names** button and uncheck the first file in the **Resulting Bodies** rollout. Also, make sure that the **Consume cut bodies** check box is selected. Choose the **OK** button and the resulting mold bottom plate will be displayed, as shown in Figure 21-13.

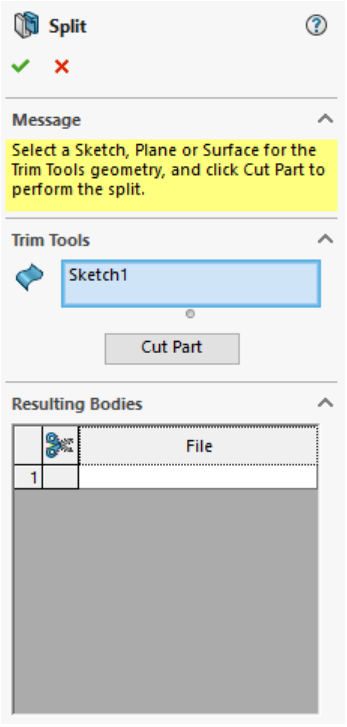

Figure 21-12 *Partial view of the* ***Split PropertyManager***

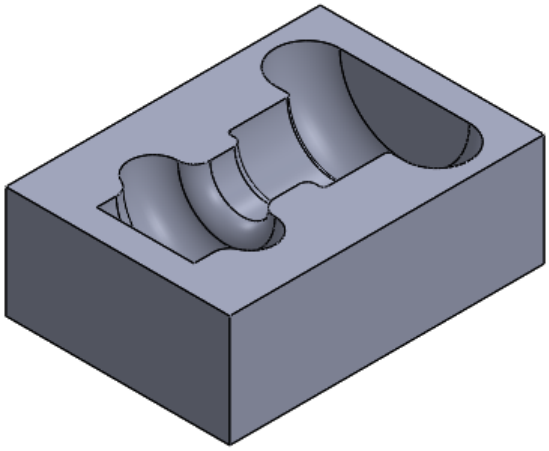

Figure 21-13 *Mold bottom plate*



Tip

To see the mold top plate, you can select it from the ***Split PropertyManager****. Click the* ***Split*** *feature from the* ***FeatureManager Design Tree*** *and choose* ***Edit Feature****. Uncheck the body you want to be displayed from the* ***Resulting Bodies*** *rollout and choose the* ***OK*** *button.*



Note

To create the gates, runners, and other features, you can use the standard modeling tools.

Designing a Mold with Core and Cavity

The second type is the one that has core and cavity. To create such a mold, you need to create the part in the **Part** mode. Make sure that you add the required draft angle while creating the part so that the component gets easily extracted from the mold. You also need to make sure

that the required scaling is added to the model so that the same scale factor is also reflected in the core and cavity. Consider an example of the Carburetor Cover shown in Figure 21-14. Figure 21-15 shows the other side of the model. Figure 21-16 shows the views and dimensions of the Carburetor Cover. This type of component requires a mold with core and cavity. The method of designing such a mold is discussed next.

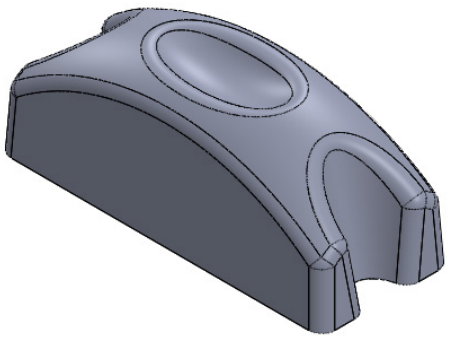

Figure 21-14 *Model of the Carburetor Cover*

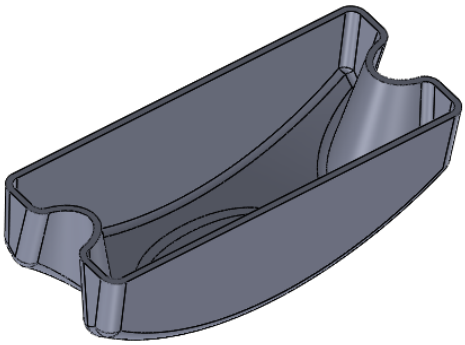

Figure 21-15 *Rotated view to display the other side of the Carburetor Cover*

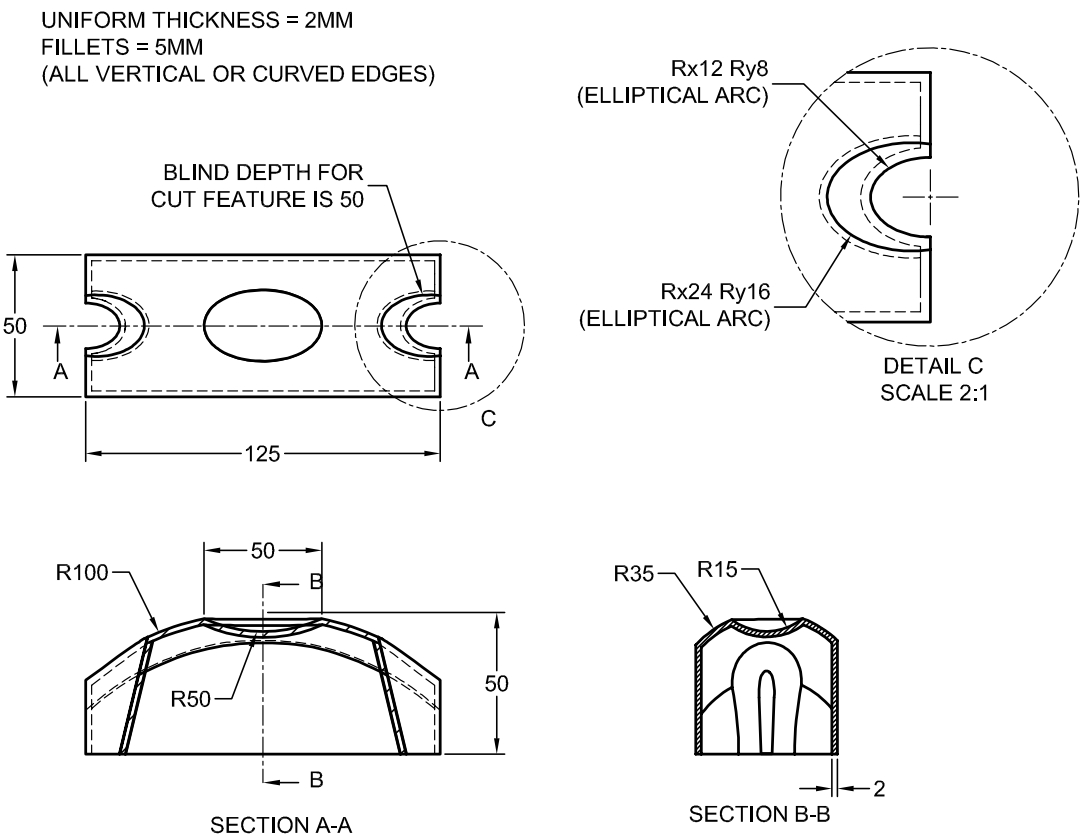

Figure 21-16 *Views and dimension of the Carburetor Cover*

Analyzing the Draft Angles

CommandManager:	Mold Tools > Draft Analysis
Toolbar:	Mold Tools > Draft Analysis



Before generating the core and cavity, you need to analyze and apply drafts to the model. The **Draft Analysis** tool is used to analyze the draft angles of the model. Choose the **Draft Analysis** button from the **Mold Tools** toolbar; the **Draft Analysis PropertyManager** will be displayed, as shown in Figure 21-17. First you need to select a plane, face, or an edge that will define the direction of the pull. The name of the selected entity is displayed in the **Direction of Pull** selection box. The default draft angle value is displayed in the **Draft Angle** spinner. You can modify the value of the draft angle in the spinner. Choose the **Top Plane** as the direction of pull. The faces of the model will be displayed in different colors specifying the status of drafted faces; the faces displayed in green color indicate that they have a positive draft. The faces displayed in yellow indicate that they require a draft angle. The faces displayed in red indicate that they have a negative draft angle.

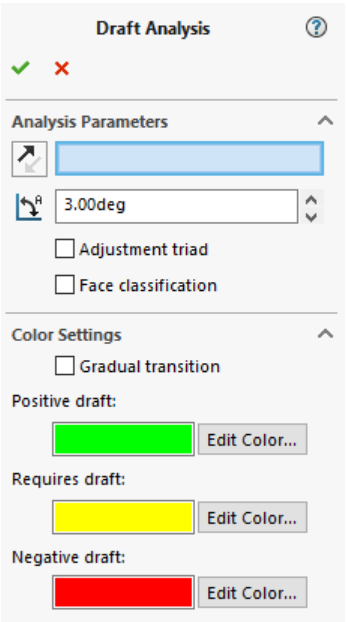

*Figure 21-17 The **Draft Analysis PropertyManager***

Choose the **OK** button from the **Draft Analysis PropertyManager** and add the draft to the faces that were displayed in yellow. The other options available in the **Draft Analysis PropertyManager** are discussed next.

Adjustment triad

The **Adjustment triad** check box is selected to display the triad in graphical area. You can adjust the direction of pull with the help of the rings of the triad. As you change the direction of pull, the model will be updated automatically.

Face classification

The **Face classification** check box available in the **Analysis Parameters** rollout is used to refine the draft analysis depending on the type of draft. When you select this check box, the **Show/Hide** buttons are provided with the **Positive draft**, **Requires draft**, **Negative draft**, **Straddle faces** areas. Using this **Show/Hide** button, you can display the type of faces that need to be analyzed.

Find steep faces

The **Find steep faces** check box is selected to analyze the positive steep faces and the negative steep faces. This check box is only available if you select the **Face classification** check box.

Gradual transition

The **Gradual transition** check box is selected to display color variations specifying the draft angles on the model. This displays the range of angles starting from the positive draft through negative draft depending on the value of the angle specified in the **Draft Angle** spinner.

Scaling the Model

CommandManager:	Mold Tools > Scale
SOLIDWORKS menus:	Insert > Molds > Scale
Toolbar:	Mold Tools > Scale



After creating the model and draft angle analysis, you need to scale the model so that the resultant core and cavity are created bigger than the component that will be manufactured using that core and cavity. As discussed earlier, the size of the core and the cavity is always bigger than the resultant component because the component will shrink after solidification. For scaling the model, choose the **Scale** button from the **Mold Tools** toolbar; the **Scale PropertyManager** is displayed, as shown in Figure 21-18.

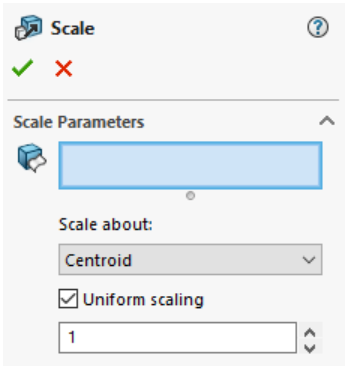

Figure 21-18** The **Scale PropertyManager

Using the options available in the **Scale About** drop-down list, you can specify the option about which you need to scale the model. Using the **Scale Factor** spinner, you can specify the scale factor for scaling the model.

The **Uniform scaling** check box is selected by default so the model gets uniformly scaled. If you clear this check box, then the **X Scale Factor**, **Y Scale Factor**, and **Z Scale Factor** spinners will become available to specify the scale factor individually along all the three directions.



Note

If you have more than one solid or surface body, then you need to select the bodies that are to be scaled using the ***Scale PropertyManager****.*

Creating the Interim Assembly to Generate the Core and Cavity

After creating, analyzing, and scaling the part, you need to create an interim assembly in which you will place the component and then extract the core and cavity. Create a new SOLIDWORKS document in the Assembly mode and then place the component in the assembly coincident to the assembly origin. The component placed coincident to the assembly origin is displayed in Figure 21-19. Save the assembly file.

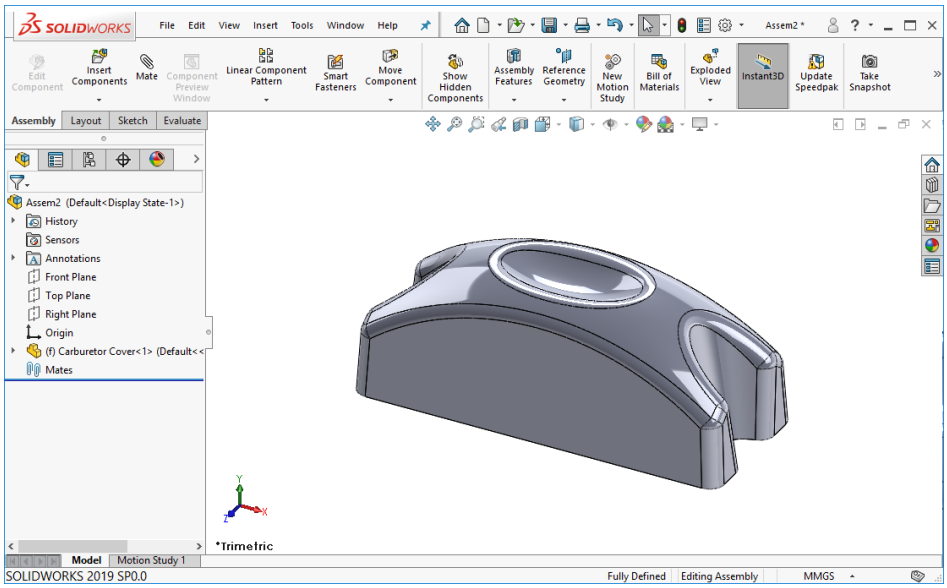

Figure 21-19 *Carburetor Cover placed coincident to the assembly origin*

Extracting the Core

After placing the component in the assembly, you need to create a new part document in which you will extract the core and cavity. The extraction of the core and cavity is a top-down assembly design approach. Therefore, you will create a new part document in the assembly file. Choose **Insert > Component > New Part** from the SOLIDWORKS menus. You will be prompted to select the face or plane on which the new part is to be positioned. Select **Front Plane**; the sketching environment is invoked and the Carburetor Cover is displayed transparent. Right-click the new part node added in the **FeatureManager Design Tree** and rename the part as Core. Exit the sketching environment.

Now, you need to create a radiated surface that will be used as the parting surface for extracting the core. Invoke the **Radiate Surface** tool from the **Mold Tools CommandManager** and select the **Top Plane** as the **Radiate Direction Reference**. Now, select the outer edge of the base as the **Edges to Radiate**. Select the **Propagate to tangent faces** check box. Figure 21-20 shows the

radiate direction and the edges to be radiated. Set the value of the **Radiate Distance** spinner to **40 mm** and choose **OK**. Figure 21-21 shows the resultant radiated surface.

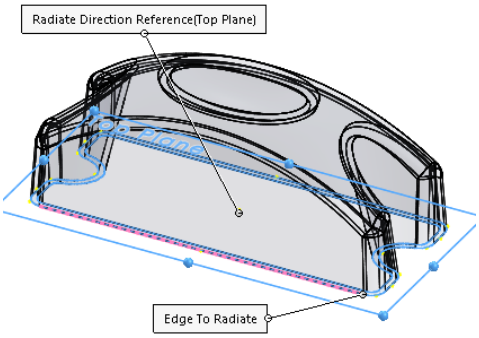

Figure 21-20 *Radiate direction and the edges to radiate*

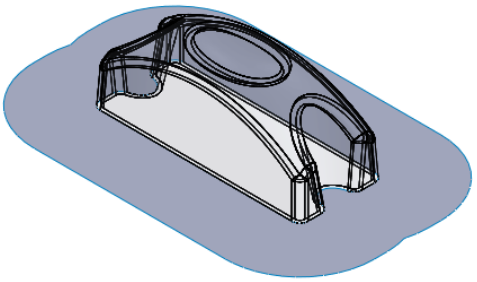

Figure 21-21 *Resultant radiated surface*

Next, you need to knit the radiated surface with the seed surface for creating a knit surface that will be used to generate the core. To do so, invoke the **Knit Surface** tool. Select the radiated surface and seed surface in the **Surfaces and Faces to Knit** and the **Seed Faces** selection boxes respectively, refer to Figure 21-22. Choose the **OK** button from the **Knit Surface PropertyManager**.

Select the Carburetor Cover from the **FeatureManager Design Tree** and invoke the shortcut menu. Choose **Hide Components** from the shortcut menu. Figure 21-23 shows the resultant knitted surface.

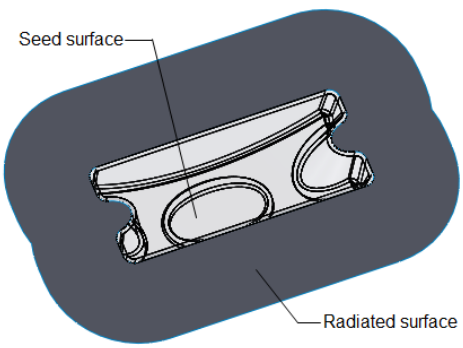

Figure 21-22 *Radiated surface and the seed surface*

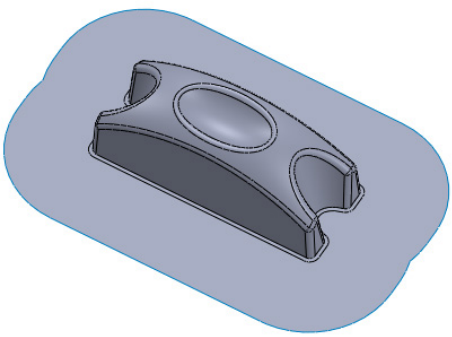

Figure 21-23 *Resultant knit surface*

Now, create a new plane at some offset distance below the radiated surface. Select the newly created plane as the sketching plane and invoke the sketching environment. Create the sketch of the core base and extrude it using the **Up To Surface** option with the knitted surface as reference. Hide the knitted surface. Figure 21-24 shows the final core.

Choose the **Edit Component** button from the assembly toolbar to return to the assembly environment.

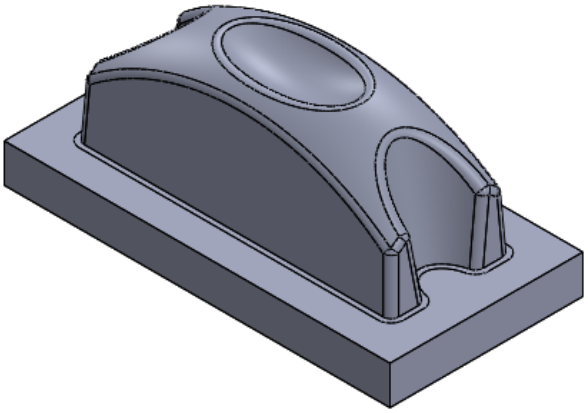

Figure 21-24 *Final Core*

Extracting the Cavity

In this section you need to generate the Cavity in the mold. Before proceeding further, hide the Core and then unhide the Carburetor Cover. Now, create a new SOLIDWORKS part in the assembly file; choose **Insert > Component > New Part** from the SOLIDWORKS menus. You will be prompted to select the face or the plane on which the new part is to be positioned. Select **Front Plane**; the sketching environment is invoked and the Carburetor Cover is displayed as transparent. Right-click on the new part node added in **FeatureManager Design Tree** and rename the part as Cavity. Exit the sketching environment. As discussed earlier, create a radiated surface. Next, you need to create a knit surface. Invoke the **Knit Surface PropertyManager** and select the radiated surface and the seed surface, refer to Figure 21-25. Choose the **OK** button from the **Knit Surface PropertyManager**. Figure 21-26 shows the resultant knit surface.

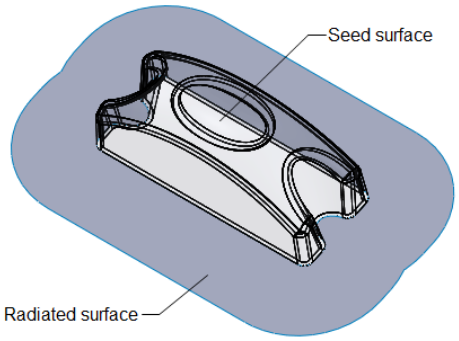

Figure 21-25 *Radiated surface and the seed surface*

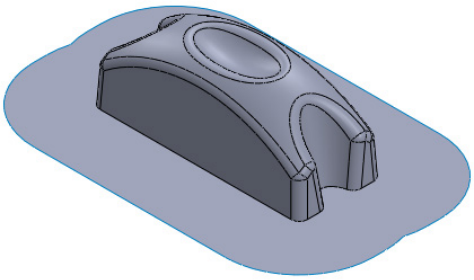

Figure 21-26 *Resultant knit surface*

Now, create a new plane offsetted vertically upward from the radiated surface. Remember that the offset distance should be more than the total height of the carburetor cover. Select this plane as the sketching plane and create the sketch for the cavity base and extrude it using the **Up To Surface** option. Now, hide the surface body. The final cavity is shown in Figure 21-27.

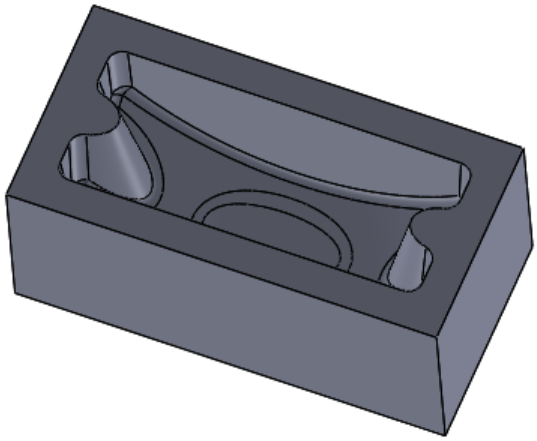

Figure 21-27 *Final cavity*

Now, unhide all other components and create the exploded view using the **Exploded View** tool, as shown in Figure 21-28.

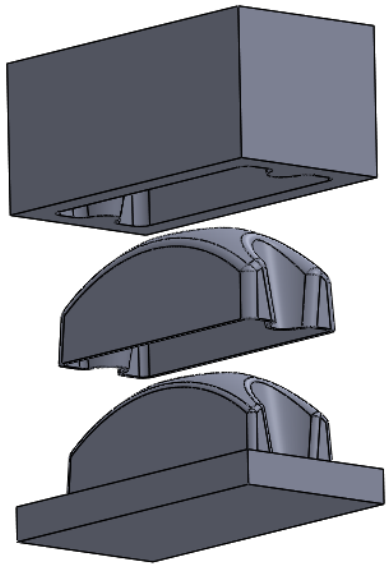

Figure 21-28 *Exploded view of the final assembly*

Save the assembly. The separate part documents of the Core and Cavity are also created. You can use these part documents for further use such as tool path generation or for performing some analysis. You also need to use the standard modeling tools to create the gates, runners, and so on.



Note

Sometimes, you may need to place some inserts in the mold to restrict the flow of metal in the mold. While designing a mold in SOLIDWORKS, you need to create the inserts using the top-down assembly approach.

TUTORIALS

Tutorial 1

In this tutorial, you will extract the core and cavity of a plastic cover shown in Figure 21-29. The resultant core is displayed in Figure 21-30 and the cavity is displayed in Figure 21-31. Figure 21-32 shows the exploded view of the assembly of the Mold Base. Figure 21-33 shows the views and dimensions of the plastic cover. Figure 21-34 shows the dimensions of the core plate. The dimensions of the cavity plate are displayed in Figure 21-35. **(Expected time: 1.5 hr)**

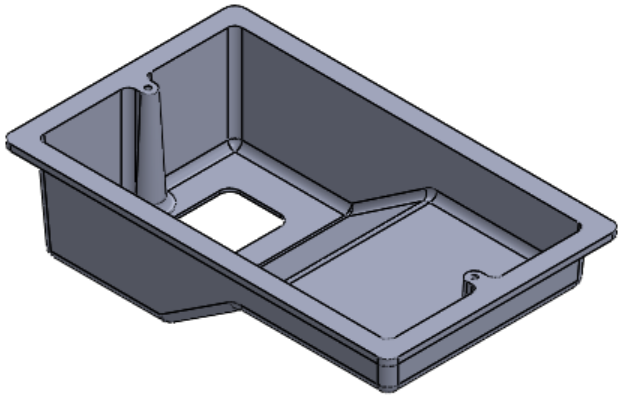

Figure 21-29 *Plastic cover*

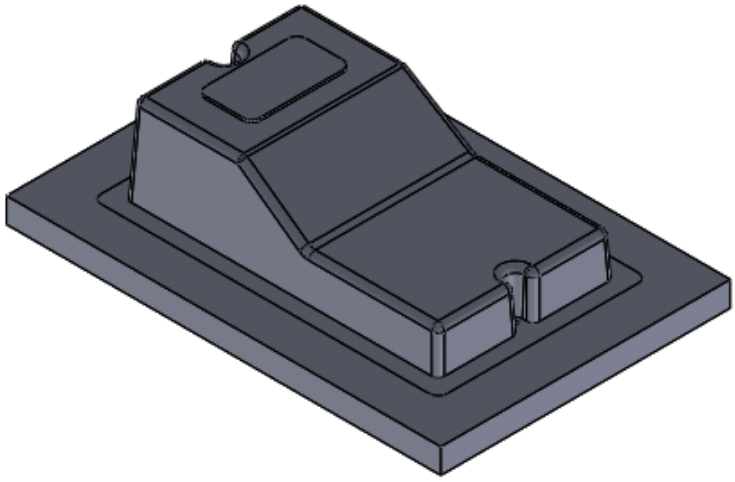

Figure 21-30 *Core of the Plastic Cover*

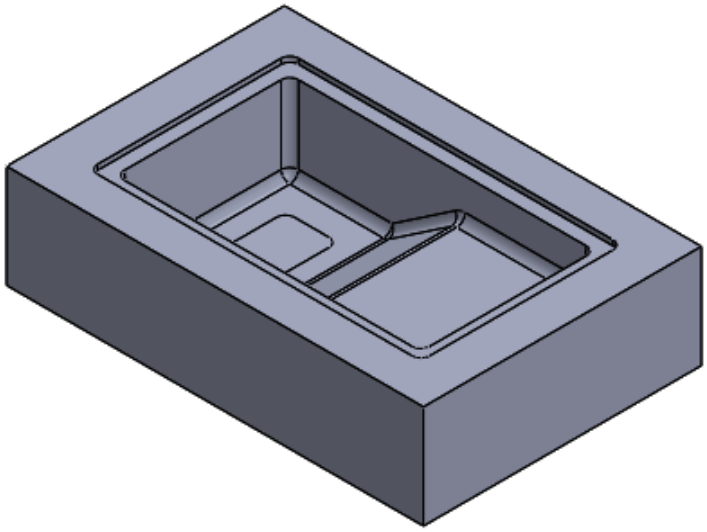

Figure 21-31 *Cavity of the Plastic Cover*

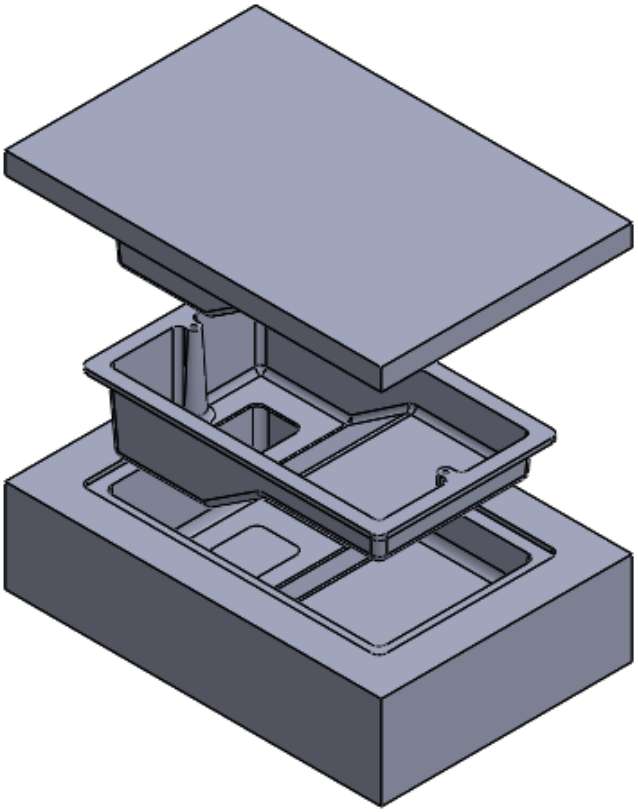

Figure 21-32 *Exploded view of the Mold Base assembly*

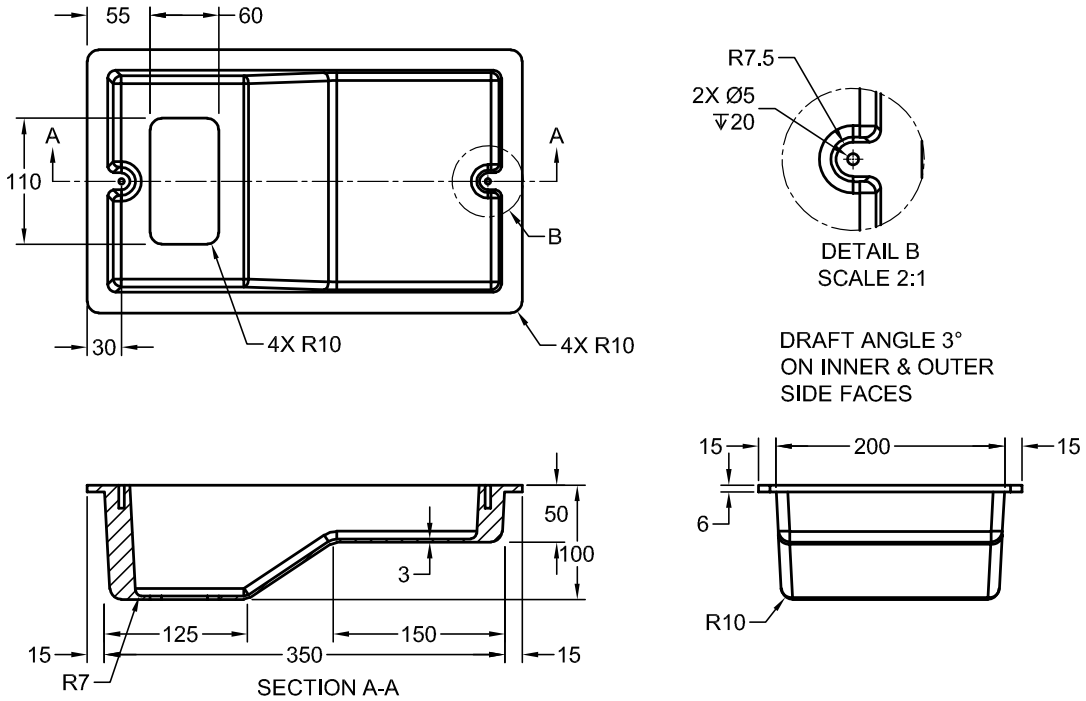

Figure 21-33 *Views and dimensions of the plastic cover*

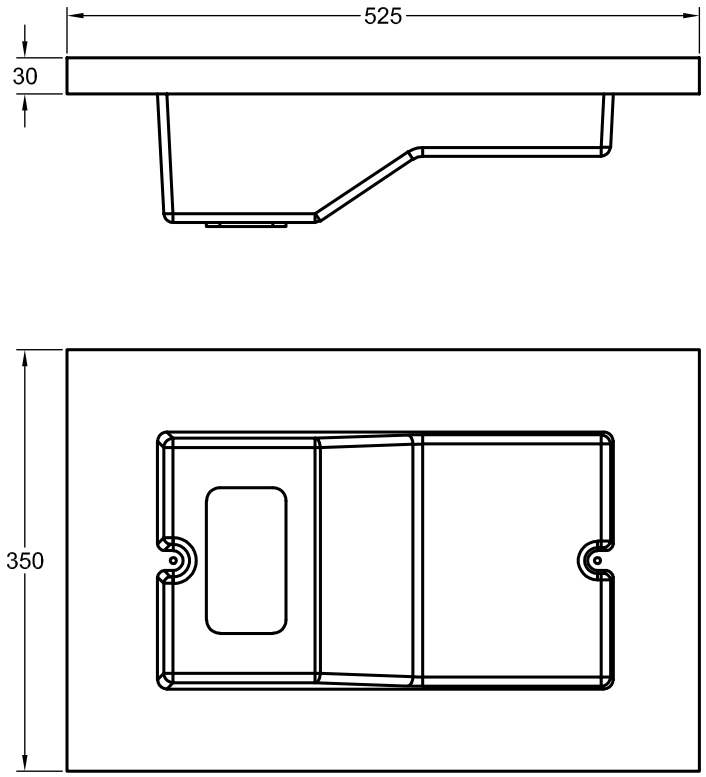

Figure 21-34 *Dimensions of the core plate*

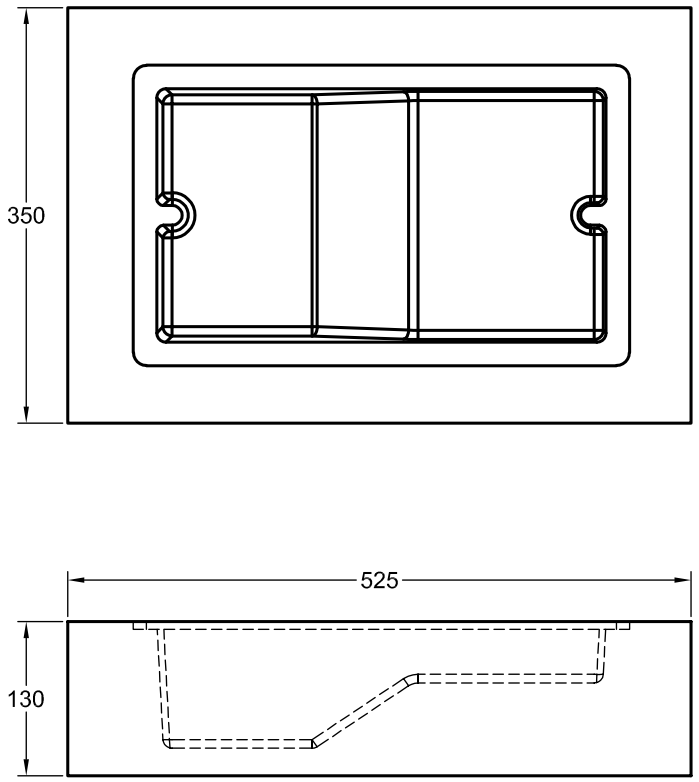

Figure 21-35 *Dimensions of the cavity plate*

The following steps are required to complete this tutorial:

a. Start a new SOLIDWORKS document and then create the model of the plastic cover.
b. Analyze the model for draft angles using the Draft analysis.
c. Scale the model.
d. Create the shut off surfaces.
e. Start a new SOLIDWORKS document in the Assembly mode and place the plastic cover in the assembly document.
f. Use the top-down approach to extract the core and cavity of the Plastic Cover.
g. Explode the assembly.

Creating the Plastic Cover

First, you need to create the plastic cover in the Part mode of SOLIDWORKS.

1. Start a new SOLIDWORKS document in the Part mode.

2. Using the standard modeling tools, create the model of the plastic cover. For dimensions, refer to Figure 21-33.

3. Save the model. Figure 21-36 shows the final model created using the standard modeling tools.

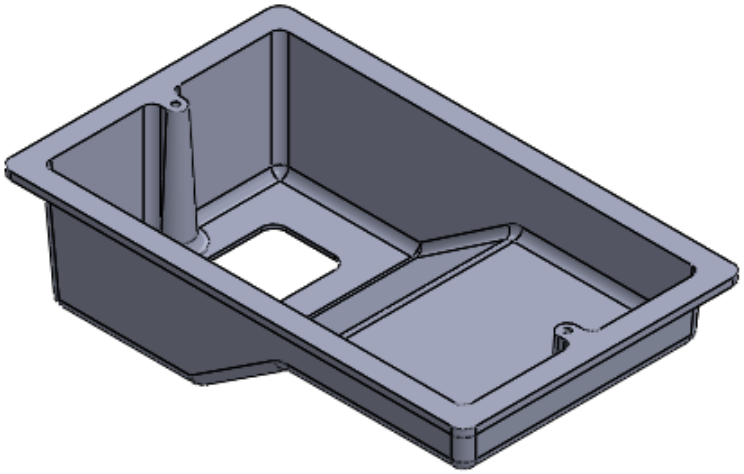

Figure 21-36 *Final model of the Plastic Cover*

Analyzing the Model for Draft Angles

As discussed earlier, before extracting the core and cavity, you need to make sure that the required draft angles are applied to the model so that the component is easily removed from the model after solidification. Therefore, you will analyze the model using the **Draft Analysis** tool.

1. Choose the **Draft Analysis** button from the **Mold Tools** toolbar; the **Draft Analysis PropertyManager** is displayed.



First, you need to select the direction of pull along which the mold will be pulled out.

2. Select the top face of the plastic cover to define the direction of pull. Choose the **Reverse Direction** button available on the left of the **Direction of Pull** selection box.

You will notice that the faces having positive draft and negative draft are displayed in green and red color respectively. Also, some small faces are displayed in yellow color, suggesting that the draft angle is required on these faces. Since these faces are very small in height as compared to the other faces of the part, therefore the draft angle is not required on them. You will also notice that the hole placed on one of the top faces of the part also displays its inner faces in yellow color. But you do not need to add draft to the inner faces of these holes because these holes will not be included in the core. These type of holes are drilled in the final molded part.

If any face other than the faces having minor thickness are displayed in yellow, then you need to add required draft angle on those faces.

3. Choose the **OK** button from the **Draft Analysis PropertyManager**.

Scaling the Model and Creating Shut-Off Surfaces

After analyzing the model for draft angles, you need to scale the model. As discussed earlier, the scaling of the model is done in order to create the core and cavity larger than the component to be manufactured as the component shrinks after solidification. The scale factor always depends on the material to be used for molding or casting and also on the type of mold.

1. Choose the **Scale** button from the **Mold Tools** toolbar to invoke the **Scale PropertyManager**. 

2. Set the value of the scale factor in the **Scale Factor** spinner to 1.1.

3. Choose the **OK** button from the **Scale PropertyManager**.

4. Invoke the **Planar Surface** tool and select the edges, as shown in Figure 21-37. Next, create the shutoff surface and then close the **Planar Surface PropertyManager**. Model after creating the shutoff surface using the **Planar Surface** tool is shown in Figure 21-38.

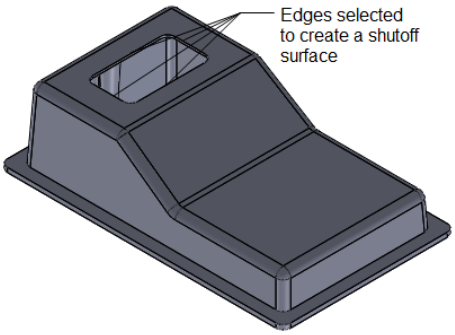

Figure 21-37 *Edges selected to create a shutoff surface*

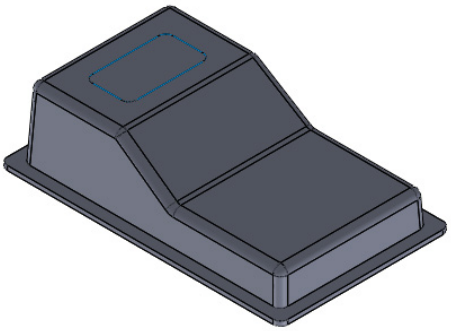

Figure 21-38 *Model after creating the shutoff surface*

5. Using the **Planar Surface** tool, create the shutoff surfaces on the edges of the holes created on one of the top faces of the model.

6. Save the model.

Creating the Interim Assembly

After finalizing the model, you need to create an interim assembly. Using this interim assembly and the top-down approach, you will extract the core and cavity of the model. To create the interim assembly, you first need to start a new SOLIDWORKS assembly document.

1. Start a new SOLIDWORKS assembly document.

2. Place the Plastic Cover coincident to the assembly origin.

3. Save the assembly file with the name Mold Base.

Extracting the Cavity

After creating the interim assembly, you need to extract the cavity. For extracting the cavity, you will use the top-down approach of the assembly.

1. Choose **Insert > Component > New Part** from the SOLIDWORKS menus.

2. Select the **Front plane** from the **FeatureManager Design Tree** to place the new component.

   As you place the component, the plastic cover is displayed transparent and the sketching environment in invoked. Right-click on the new part node added to the **FeatureManager Design Tree** and rename the part as Cavity.

3. Exit the sketching environment.

4. Using the **Radiate Surface** tool, create a radiated surface with a radiate distance of 10 mm, refer to Figure 21-39.

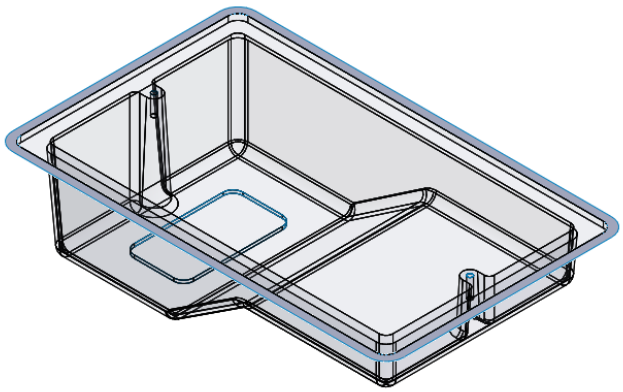

Figure 21-39 *After creating the radiated surface*

Remember that if you have created shutoff surfaces in the model, there will be no seed surface. You need to select all the other faces of the model and the radiated surface as the surface to knit. To knit the radiated surface with the outer faces of the Plastic cover, you need to select all the outer faces of the model and the radiated surface.

5. Select the outer faces of the model and the radiated surface. Also, select the shut off surfaces created on the bottom face of the Plastic cover. Next, invoke the **Knit Surface** tool.

6. Choose the **OK** button from the **Knit Surface PropertyManager**.

7. Select the Plastic Cover from the **FeatureManager Design Tree** and invoke the shortcut menu. Choose the **Hide Components** option from the shortcut menu. The resultant surface body is displayed in Figure 21-40.

   Next, you need to create a plane at an offset distance from the radiated surface and then create the sketch of the cavity on the newly created plane. Then, extrude the sketch of the cavity up to the knitted surface.

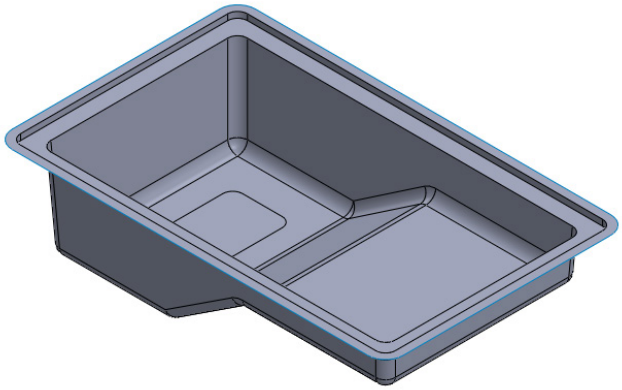

Figure 21-40 *Resultant knitted surface after hiding the plastic cover*

8. Create a new plane vertically downward at an offset distance of 130 mm from the radiated surface.

9. Create the sketch on the newly created plane for creating the solid cavity with help of the **Convert Entities** tool, as shown in Figure 21-41.

10. Now, using the **Up To Surface** option, extrude the sketch up to the knitted surface.

11. Hide the knit surface.

    The resultant cavity is displayed in Figure 21-42.

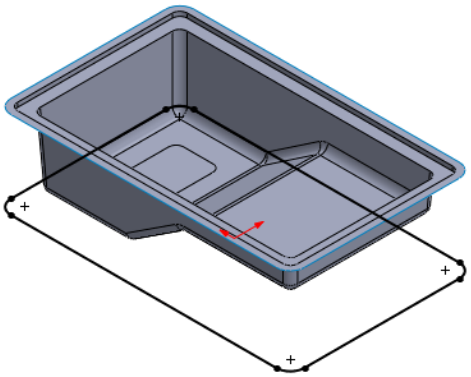

Figure 21-41 *Sketch for the cavity*

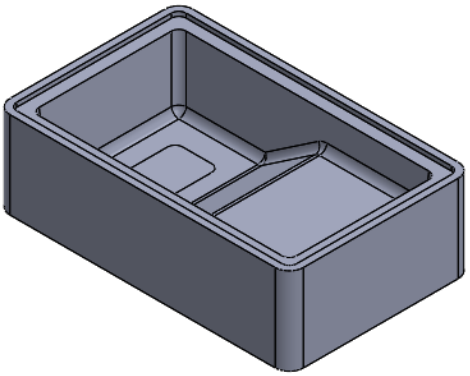

Figure 21-42 *Resultant cavity*

Next, you need to create the cavity plate. This plate will be created by extruding a rectangular sketch upto a distance of 130 mm.

12. Select the bottom face of the cavity as the sketching plane and invoke the sketching environment.

13. Create a rectangular sketch of dimension 525 × 350.

14. Extrude the sketch upto a distance of 130 mm by selecting the desired contour from the **Selected Contours** rollout.

15. Save the assembly. While saving the assembly the **Save As** message box is displayed. Select the desired option to save the files externally or internally.

Figure 21-43 shows the final cavity plate.

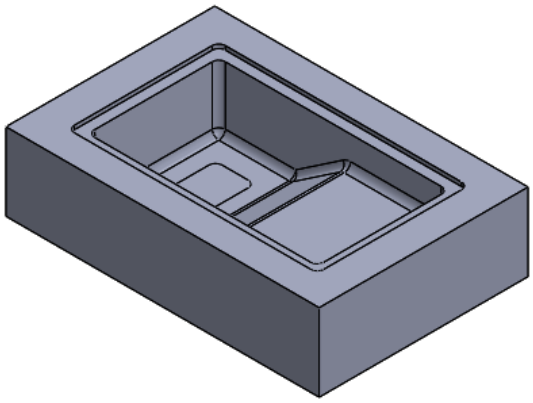

Figure 21-43 *Final cavity plate*

Extracting the Core

Next, you need to extract the core from the plastic cover. The core will also be extracted using the top-down approach of the assembly. Before proceeding further, you need to hide the cavity and unhide the plastic cover.

1. Hide the cavity and unhide the plastic cover.

2. Choose **Insert > Component > New Part** from the SOLIDWORKS menus.

3. Select the **Front plane** from the **FeatureManager Design Tree** to place the new component.

As you place the component, the plastic cover is displayed transparent and the sketching environment is invoked. Right-click on the new part node added to the **FeatureManager Design Tree** and rename the part as Core.

4. Exit the sketching environment.

5. Create a radiated surface as created earlier.

6. Now, knit all the internal surfaces of the plastic cover with the radiated surface.

7. Hide the plastic cover.

The resultant extracted surface is displayed in Figure 21-44.

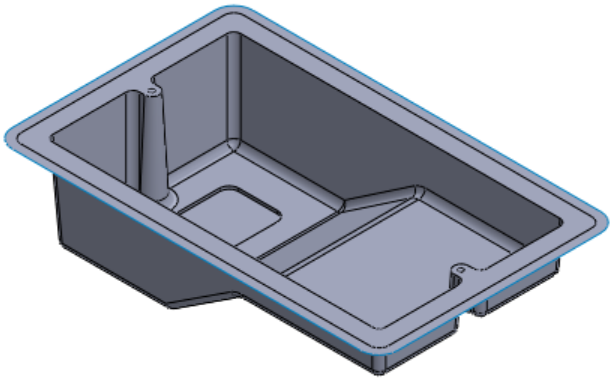

Figure 21-44 *Resultant extracted surface*

8. Now, create a plane at an offset distance of 30 mm from the top face of the extracted surface.

9. Select the newly created plane as the sketching plane and create the sketch of the Core using the **Convert Entities** tool, as shown in Figure 21-45.

10. Extrude the sketch up to the knitted surface and hide the knitted surface. Figure 21-46 shows the resultant core extracted from the plastic cover.

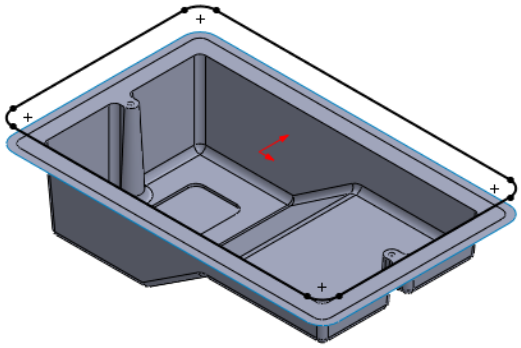

Figure 21-45 *Sketch for creating the Core*

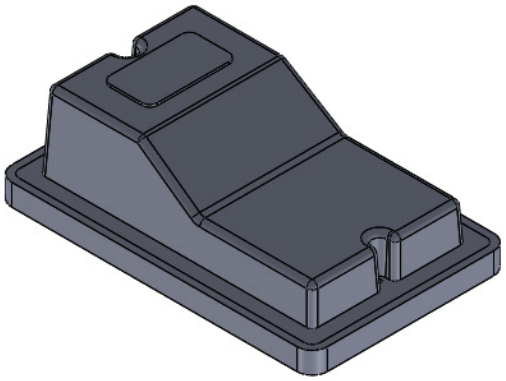

Figure 21-46 *Resultant Core*

11. Now, create the core plate by extruding the sketch created on the top face of the Core.

12. Save the assembly.

The final Core is displayed in Figure 21-47.

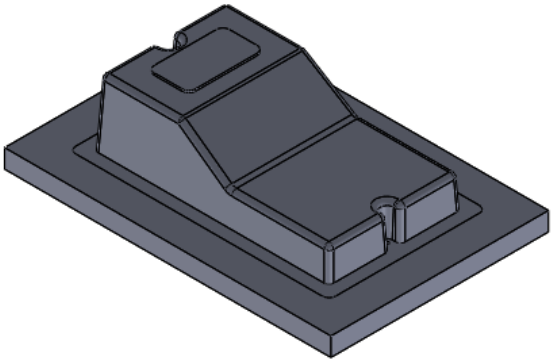

Figure 21-47 *Rotated view of the core*

Creating the Exploded View of the Assembly

After extracting the core and cavity of the plastic cover, you need to create exploded view of the Mold base assembly. For creating the exploded view of the Mold base assembly, first you need to unhide the Cavity and the Plastic Cover.

1. Unhide the Cavity and the Plastic Cover.

2. Using the **Exploded View** tool in **Assembly CommandManager**, explode the Mold Base assembly, refer to Figure 21-48.

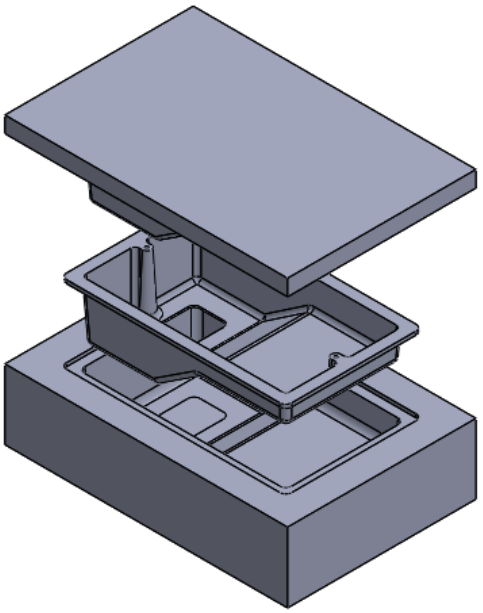

Figure 21-48 *Exploded view of the Mold base assembly*

3. Save the assembly.

Tutorial 2

In this tutorial, you will extract the core and cavity of the cover shown in Figure 21-49. The other side of the cover is displayed in Figure 21-50. The core of the cover is displayed in Figure 21-51 and the cavity in Figure 21-52. The first Insert to be inserted in the mold is displayed in Figure 21-53. The second insert is also the same as displayed in Figure 21-53. Figure 21-54 shows the exploded view of the Mold base assembly. Figure 21-55 shows the views and dimensions of the cover. Figure 21-56 shows the views and dimensions of the core. Figure 21-57 shows the views and dimensions of the cavity. Figure 21-58 shows the views and dimensions of the insert. After creating the Mold base assembly, you will also create the exploded view of the assembly.

(Expected time: 2 hr)

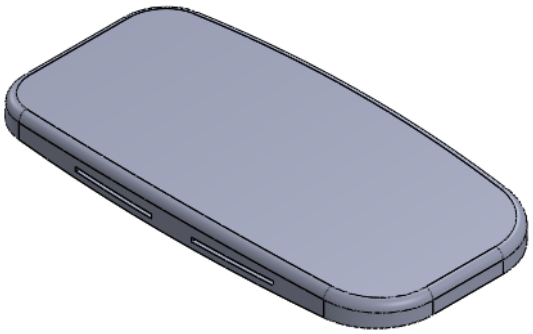

Figure 21-49 *Isometric view of the cover*

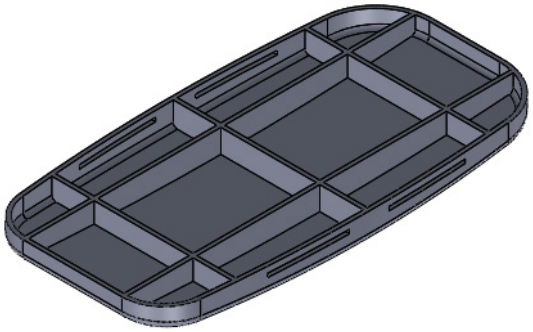

Figure 21-50 *Rotated view of the cover*

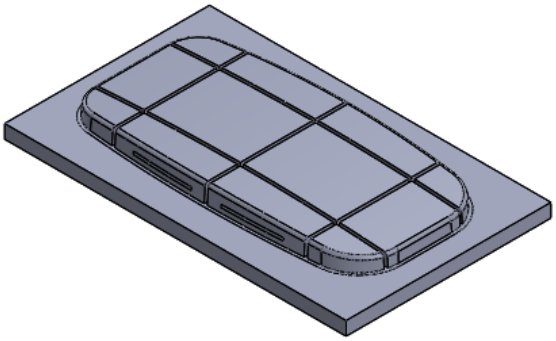

Figure 21-51 *Isometric view of the Core Plate*

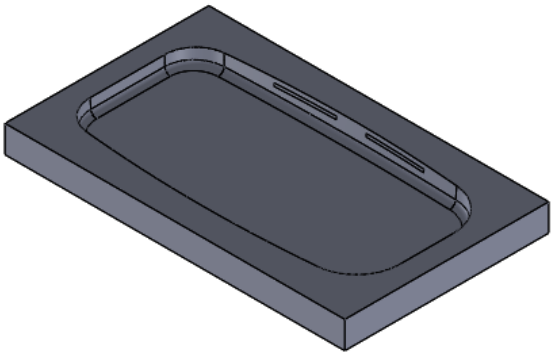

Figure 21-52 *Isometric view of the Cavity Plate*

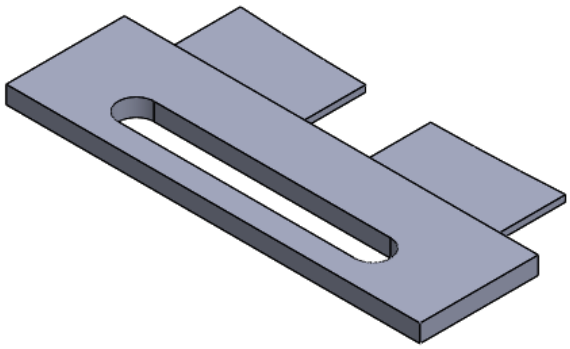

Figure 21-53 *Isometric view of the Insert*

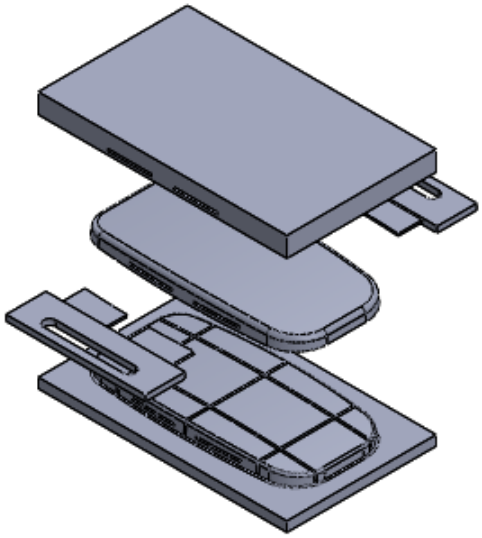

Figure 21-54 *Exploded view of the Mold Base assembly*

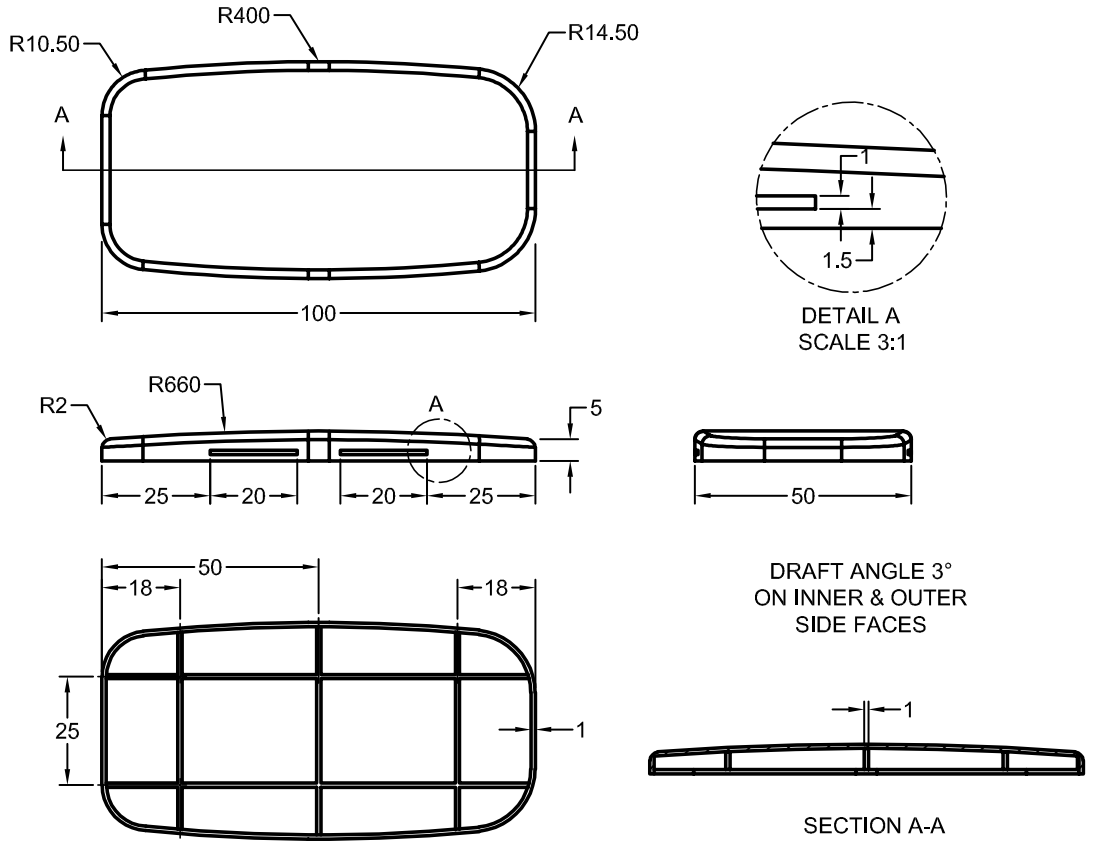

Figure 21-55 *Views and dimensions of the cover*

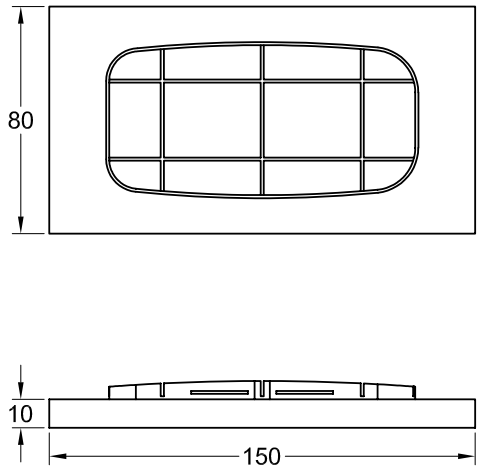

Figure 21-56 *Views and dimensions of the core*

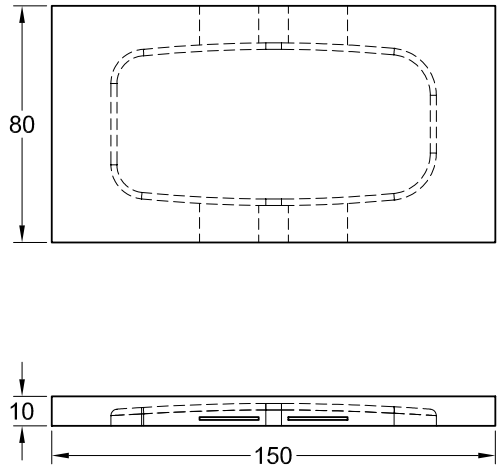

Figure 21-57 *Views and dimensions of the cavity*

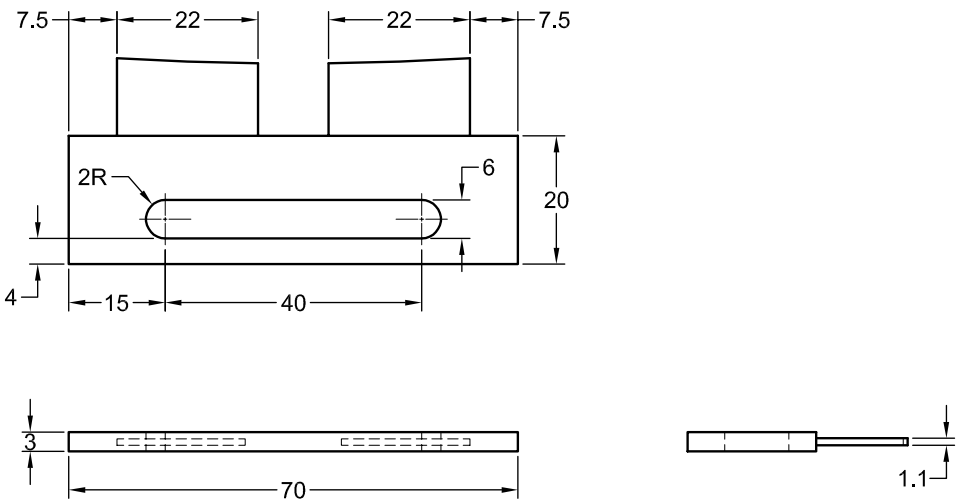

Figure 21-58 *Views and dimensions of the insert*

The following steps are required to complete this tutorial:

a. Start a new SOLIDWORKS document and using the standard modeling tools, create the model of the cover.
b. Analyze the model for the draft angles.
c. Scale the model.
d. Create the shutoff surfaces.
e. Create the interim assembly.
f. Extract the core.
g. Extract the cavity.
h. Create the slots in the cavity for the insertion of inserts.
i. Using the top-down approach, create the inserts.
j. Create the exploded view of the assembly.

Creating the Cover Part

First, you need to create the model of the cover. For creating the model, start a new SOLIDWORKS document in the Part mode.

1. Start a new SOLIDWORKS document in the Part mode.

2. Using the standard modeling tools, create the model of the cover. The completed model of the cover is displayed in Figure 21-59.

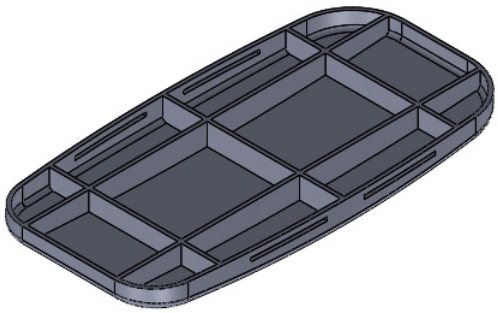

Figure 21-59 *Model of the cover*

Analyzing the Draft Angles

After creating the model, you need to analyze the model for draft angles using the **Draft Analysis** tool.

1. Invoke the **Draft Analysis** tool from the **Mold Tools** toolbar to display the **Draft Analysis PropertyManager**. Using this tool, analyze the draft angles in the model. If some faces of the model are displayed in yellow, then you need to add the draft angles to those faces.



Note

If some part of the middle portion of the curved face is displayed in yellow, you can ignore that.

Scaling the Model

After analyzing the model for draft angles and adding the drafts as required, you need to scale the model.

1. Invoke the **Scale PropertyManager**.

2. Set the value of the scale factor in the **Scale Factor** spinner to 1.1 and choose the **OK** button to scale the model.

Creating the Shutoff Surfaces

After scaling the model, you need to create the shutoff surfaces.

1. Using the **Filled Surface** tool, shut the openings on the outer front face and on the inner front face.

2. Shut the openings on the outer back face and on the inner back face using the **Filled Surface** tool.

Creating the Interim Assembly

After creating and saving the part model, you need to create an interim assembly. In this interim assembly, you will extract the core and cavity using the top-down approach.

1. Start a new SOLIDWORKS assembly document.

2. Save the assembly with the name Mold Base.

3. Place the Cover part coincident to the assembly origin.

Extracting the Core

For extracting the core, first you need to place a new part in the assembly document using the top-down approach.

1. Choose **Insert > Component > New Part** from the SOLIDWORKS menus.

2. Select the **Front plane** from the **FeatureManager Design Tree** to place the new component.

   As you place the component, the cover is displayed transparent and the sketching environment is invoked.

3. Right-click on the new part node added in the **FeatureManager Design Tree** and rename the part as Core using the option from the shortcut menu.

4. Exit the sketching environment.

5. Using the **Radiate Surface** tool, create the radiated surface using the outer edges of the bottom face of the cover.

6. Using the **Knit Surface** tool, knit all the inner surfaces of the cover with the radiated surface to create a single knitted surface.

7. Hide the cover and create a new offset plane vertically downward at a distance from the radiated surface.

8. Select the newly created plane as the sketching plane and invoke the sketching environment.

9. Create the sketch of the core and extrude it up to the knitted surface.

10. Select the bottom face of the core and invoke the sketching environment.

11. Create the sketch of the core plate and extrude it upto the required depth.

12. Return to the assembly environment and save the assembly.

The final core is shown in Figure 21-60.

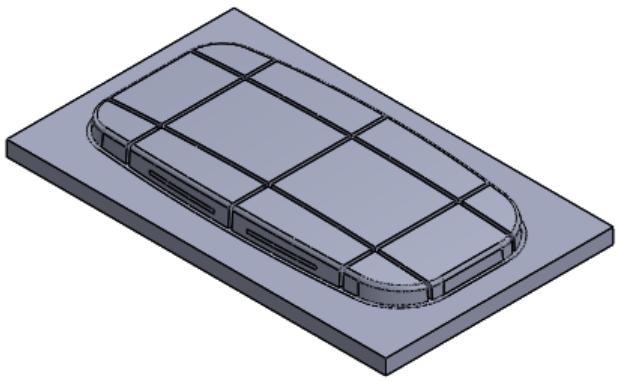

Figure 21-60 *Final core*

Extracting the Cavity

After extracting the core, you need to the extract the cavity. The cavity will also be extracted using the same procedure that was used to extract the core. For this, you first need to create a new component in the assembly.

1. Choose **Insert > Component > New Part** from the SOLIDWORKS menus.

2. Select the **Front plane** from the **FeatureManager Design Tree** to place the new component.

As you place the component, the cover is displayed transparent and the sketching environment is invoked. Right-click on the new part node added in the **FeatureManager Design Tree** and rename the part as Core.

3. Exit the sketching environment.

4. Create the radiated surface and knit the radiated surface with the outer surfaces of the part.

5. Create a plane vertically upward at an offset distance of 10 mm from the radiated surface.

6. Select the newly created plane and invoke the sketching environment.

7. Create the sketch of the cavity and then extrude the sketch up to the knitted surface.

8. Add the remaining features to create the final cavity plate, refer to Figure 21-61.

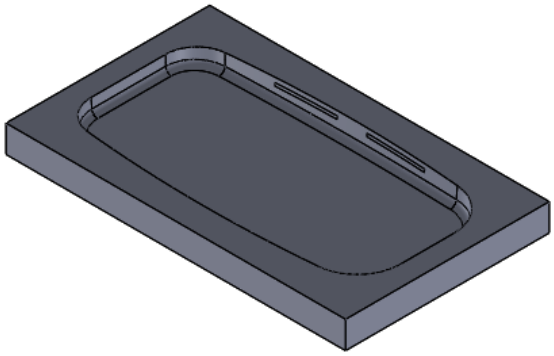

Figure 21-61 *Cavity plate displayed after hiding the cover*

Next, you need to create the slots in the cavity plate that will be used to place the inserts. The slots will be created by extruding a sketch created on the front face of the cavity plate using the cut option. The sketch of the slots will be created by using the **Convert Entities** tool on the edges of the slots of the cover.

9. Select the front face of the cavity plate as the sketching plane and invoke the sketching environment.

10. Choose the **Convert Entities** tool and select the edges of two slots displayed on the front face of the cover.

11. Invoke the **Cut-Extrude PropertyManager** and extrude the sketch using the **Through All** option.

12. Return to the assembly environment and save the assembly.

The final cavity after creating the slots is displayed in Figure 21-62.

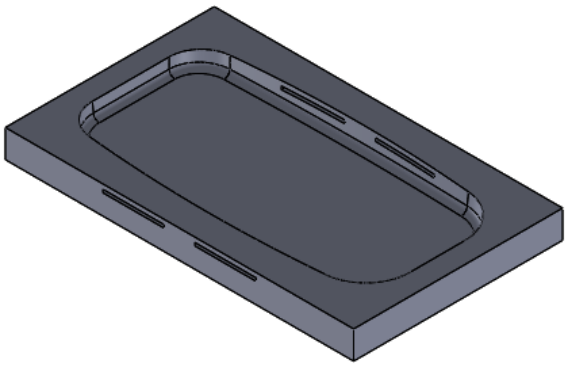

Figure 21-62 *Cavity after creating the slots*

Creating the Insert

After extracting the core and cavity, you need to create the insert that will be used to restrict the flow of molten material in the portion where the insert is placed. This in turn will create the slot in the molded plastic component. The insert will also be created as a separate part using the top-down approach.

1. Choose **Insert > Component > New Part** from the SOLIDWORKS menus.

2. Select the **Front plane** from the **FeatureManager Design Tree** to place the new component.

   Right-click on the new part node added in **FeatureManager Design Tree** and rename the part as Insert1.

3. Exit the sketching environment.

4. Select the front face of the cavity plate as the sketching plane and invoke the sketching environment.

5. Using the **Convert Entities** tool, select the edges of the slots placed on the front face of the cavity plate.

6. Extrude the sketch of each slot using contour selection up to the inner front curved face of the cover. Figure 21-63 shows the assembly with the preview of base feature being extruded using contour selection.

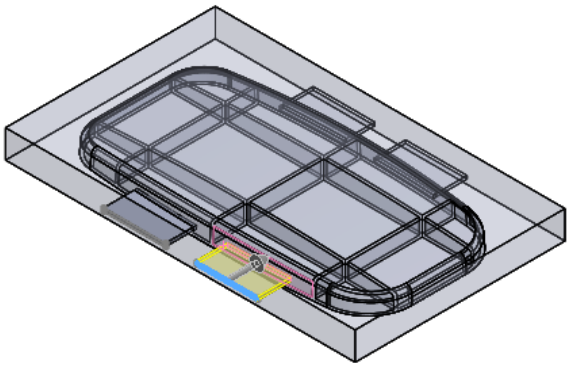

Figure 21-63 *Base feature of Insert1*

7. Using the standard modeling tools, create the back plate of the insert.

Figure 21-64 shows the assembly after creating Insert1.

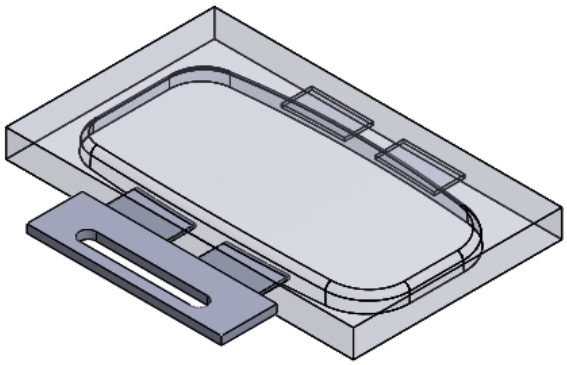

Figure 21-64 *Assembly after completing the insert*

Similarly, create another insert. The final Mold base assembly is shown in Figure 21-65.

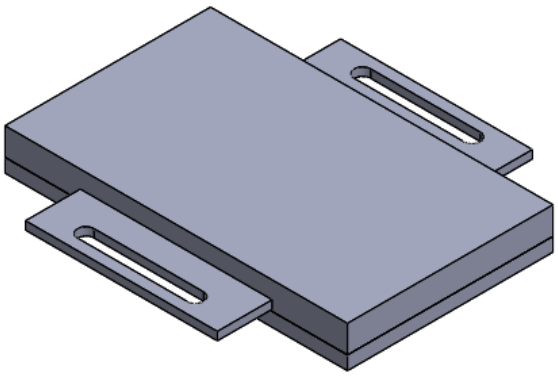

Figure 21-65 *Final Mold Base assembly*

Next, you need to create the exploded view of the assembly, refer to Figure 21-66.

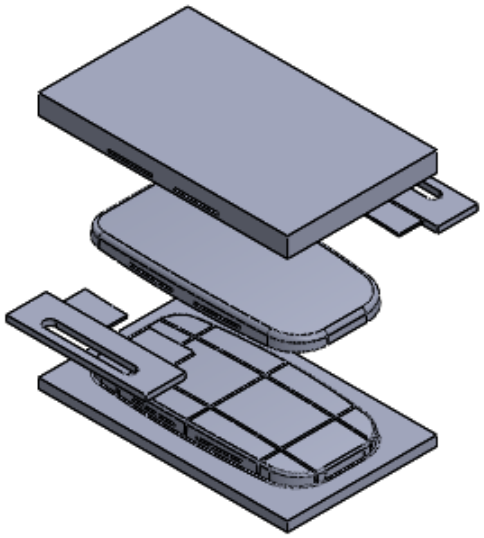

Figure 21-66 *Exploded view of the Mold Base assembly*

Self-Evaluation Test

Answer the following questions and then compare them to those given at the end of this chapter:

1. The _____ is the female part of the mold, it is hollow from inside and the molten metal or plastic is poured into it so that it can take the shape of the cavity to create the component.

2. The _____ is the male part of the mold and it defines the area where the molten metal should not reach.

3. The cavity is created using the _____ tool.

4. The options available in the _____ drop-down list provided in the **Scale Parameters** area of the **Cavity PropertyManager** are used to define the origin about which you need to scale the cavity.

5. For creating the derived components, you need to choose the _____ from the **File** menu in SOLIDWORKS menus.

6. If the **Mold Tools** toolbar is not available by default, then choose **View > Toolbars >Mold Tools** from the menu bar to display this toolbar. (T/F)

7. To invoke the **Scale PropertyManager,** you need to choose the **Scale** tool from the **Mold Tools** toolbar. (T/F)

8. The **Uniform scaling** check box is not selected by default and the model is uniformly scaled. (T/F)

9. You need to select the **Find steep faces** check box to analyze the positive steep faces and the negative steep faces. (T/F)

10. You can analyze the draft angle by choosing the **Calculate** button from the **Analysis Parameters** rollout in the **Draft Analysis PropertyManager**. (T/F)

Review Questions

Answer the following questions:

1. The _____ tool is used to analyze the draft angles of the model.

2. For scaling the model, you need to invoke the _____ tool.

3. Using the options available in the _____ drop-down list, you can specify the direction along which you can scale the model.

4. The _____ **PropertyManager** is used to analyze the draft angles.

5. The _____ check box is selected to display color variations specifying the draft angles on the model in the **Draft Analysis PropertyManager**.

6. The **Gradual transition** check box available in the **Color Settings** rollout of the **Draft Analysis PropertyManager** is used to display color variations specifying the draft angles on the model. (T/F)

7. Using the **Scale Factor** spinner, you can specify the scale factor for scaling the model. (T/F)

8. The **Face classification** check box available in the **Analysis Parameters** rollout is used to refine the draft analysis depending on the type of draft. (T/F)

9. Using the **Scale About** drop-down list, you can specify the entity about which the model will be scaled. (T/F)

10. The **Find steep faces check box** is selected to analyze the positive steep faces and the negative steep faces. (T/F)

EXERCISE

Exercise 1

In this exercise, you will extract the core and cavity of the model created in Tutorial 2 of Chapter 7, refer to Figure 21-67 and Figure 21-68. Before proceeding further, you need to modify the model by deleting the lip created as an extruded feature and then add required draft angles to the model. **(Expected time: 2 hr)**

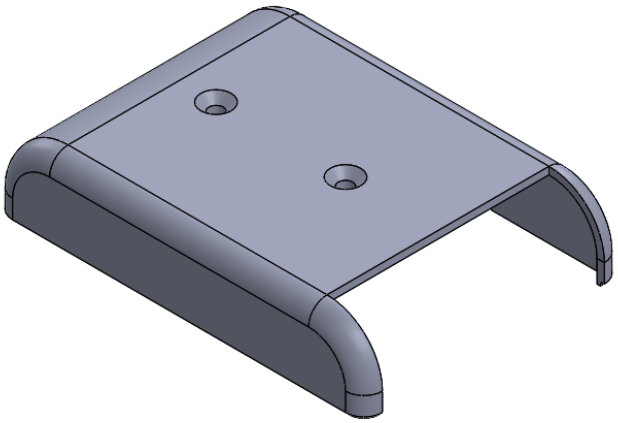

Figure 21-67 *Model for creating mold with core and cavity*

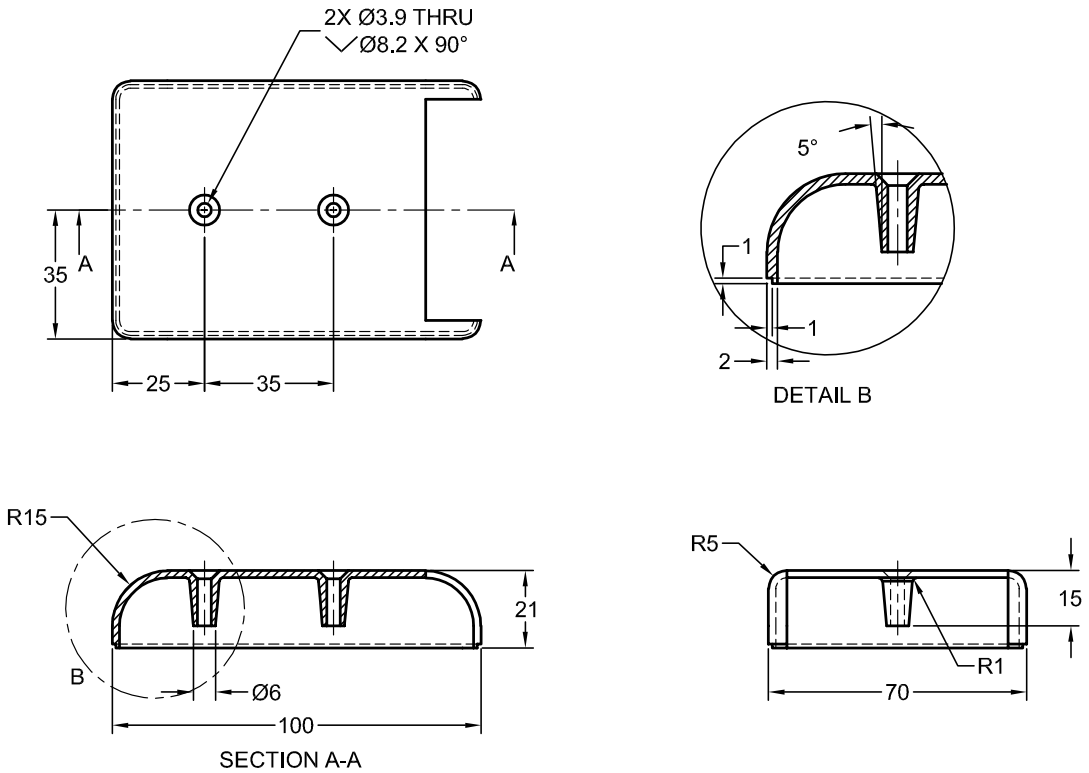

Figure 21-68 *Top view, front section view, and right side view with dimensions*

Answers to Self-Evaluation Test

1. cavity, **2.** core, **3. Cavity**, **4. About**, **5. Derive Component Part**, **6.** T, **7.** T, **8.** F, **9.** T, **10.** T