Chapter 2

Creating Sketches in the Sketch Mode-I

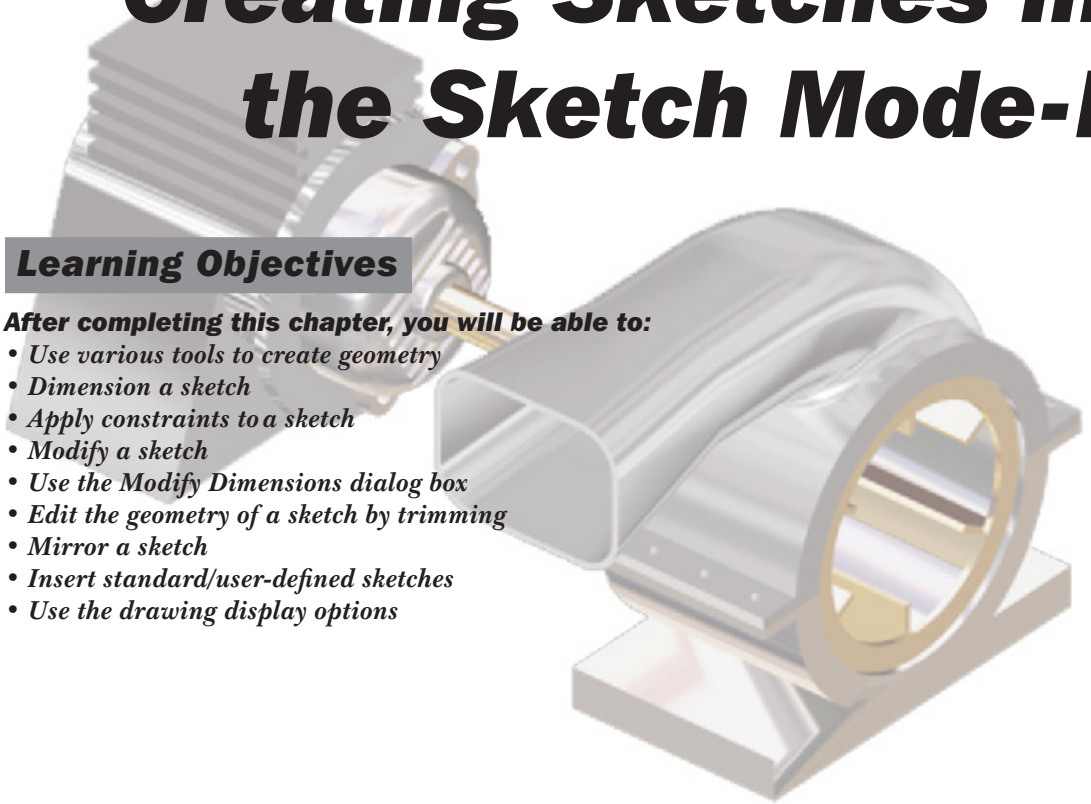

Learning Objectives

After completing this chapter, you will be able to:

- *Use various tools to create geometry*
- *Dimension a sketch*
- *Apply constraints to a sketch*
- *Modify a sketch*
- *Use the Modify Dimensions dialog box*
- *Edit the geometry of a sketch by trimming*
- *Mirror a sketch*
- *Insert standard/user-defined sketches*
- *Use the drawing display options*

THE SKETCH MODE

A sketch is a 2D entity that graphically captures an idea using lines, curves, constraints, and dimensions. To create a three-dimensional (3D) feature, it is necessary to draw or import a two-dimensional (2D) sketch. Almost all models designed in Creo Parametric consist of datums, sketched features, and placed features. When you enter the **Part** mode and select options to create any sketched feature, the system automatically takes you to the sketcher environment. In the sketcher environment, the sketch of the feature is created, dimensioned, and constrained. The sketches created in the **Sketch** mode are stored in the *.sec* format. After creating the sketch, you need to return to the **Part** mode to create the required feature.



Note

You will learn about datums and placed features in later chapters.

In Creo Parametric, a sketch can be drawn using the **Sketch** mode in the sketcher environment or can be imported from other softwares. You can draw a 2D sketch of the product and assign the required dimensions and constraints to capture the design intent. By assigning dimensions and constrains to sketches, you can ensure predictable results when a model is modified.

Working with the Sketch Mode

To create any sketch in the **Sketch** mode of Creo Parametric, certain basic steps have to be followed. The following points outline the steps to draw a sketch in the **Sketch** mode:

1. Sketch the Required Section

The different tools available in this mode can be used to sketch the required geometry.

2. Add Constraints and Dimensions to the Sketched Section

While sketching the section geometry, weak dimensions are automatically added to the section. The sketch can also be dimensioned and constrained manually. The dimensions that are applied manually are called strong dimensions. After adding the dimensions, you can modify them as required.

Invoking the Sketch Mode

To invoke the **Sketch** mode, choose **New** from the **File** menu or choose the **New** button from the **Data** group in the **Home** tab of the **Ribbon**; the **New** dialog box will be displayed with different Creo Parametric modes in the **Type** area. Select the **Sketch** radio button to start a new file in the **Sketch** mode, refer to Figure 2-1; a default name of the sketch file appears in the **File Name** edit box. You can change the sketch name as required and then choose the **OK** button to enter the **Sketch** mode.

Evaluation Copy. Do not reproduce. For information visit www.cadcim.com

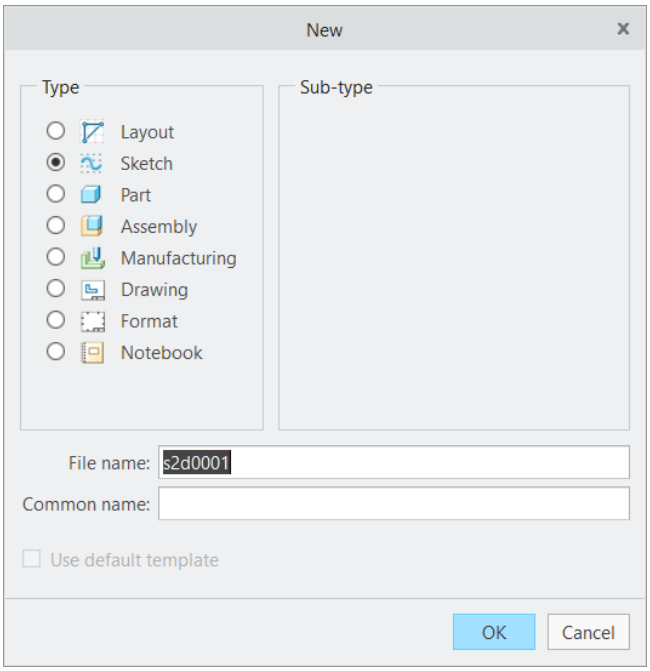

Figure 2-1 *The New dialog box*

THE SKETCHER ENVIRONMENT

When you invoke the **Sketch** mode, the initial screen displayed is similar to the one shown in Figure 2-2. The **Sketch** tab is chosen by default in the **Ribbon**. The drawing tools are available in the **Sketching** group of the **Sketch** tab.

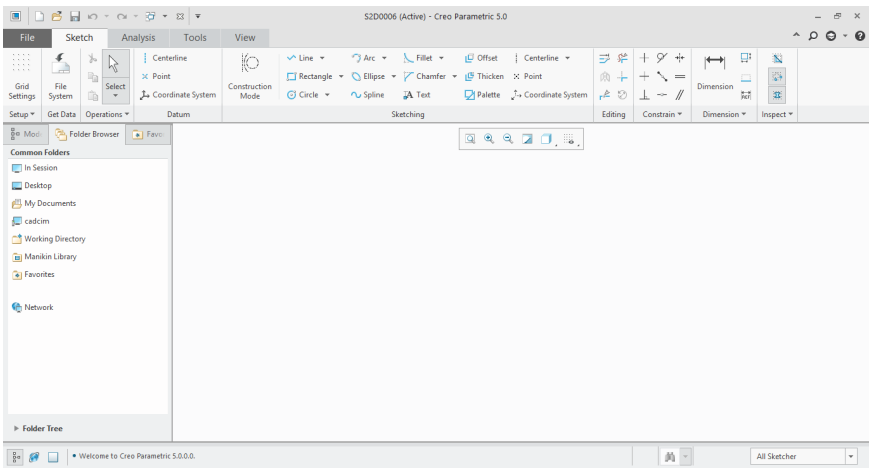

Figure 2-2 *Initial screen appearance in the Sketch mode*

The navigator is displayed on the left of the drawing area. In navigator, the **Folder Browser** tab is activated by default. It covers a part of the drawing area and therefore the drawing area is decreased. You can increase the drawing area by choosing the **Show Navigator** button, which is available at the bottom left corner of the window.

Evaluation Copy. Do not reproduce. For information visit www.cadcim.com



Note

*1. Datum planes are not displayed in the **Sketch** mode.*

*2. The **Folder Browser** tab is divided into two areas, **Common Folders** and **Folder Tree**. The functions of the **Common Folders** and **Folder Tree** areas have already been discussed in Chapter 1.*

WORKING WITH A SKETCH IN THE SKETCH MODE

When you invoke the sketcher environment, the **One-by-One** selection filter is selected by default in the **Select** drop-down list of the **Operations** group. You can select other selection filters from the **Select** drop-down list. Other selection filters available in this drop-down list are **Chain**, **All Geometry**, and **All**. By using the **One-by-One** selection filter, you can select each individual entity from the drawing area. By using the **Chain** selection filter, you can select a complete chain of entities linked with the selected entity. If the **All Geometry** selection filter is selected then all the geometric entities available in the drawing area are selected automatically. If you selected the **All** selection filter is selected then all entities available in the drawing area are selected automatically.



Note

*1. The **One-by-One** selection filter is activated by default. If you activate another selection filter, then that selection filter will be deactivated automatically after using once, and again the **One-by-One** selection filter will be activated automatically.*

2. A sketch in Creo is saved with .sec file extension.

3. You can create a simple sketch by using the options available in the shortcut menu which is displayed by pressing and holding the right mouse button in the drawing area. Once the shortcut menu is displayed, the right mouse button can be released.

DRAWING A SKETCH USING THE TOOLS AVAILABLE IN THE SKETCH TAB

In the sketcher environment, the **Sketch** tab is active in the **Ribbon** by default. There are various groups in this tab which contain tools to draw and modify a sketch and its dimensions. In this section, you will draw sketched entities using the tools available in the **Sketch** tab.

Creating a Point

Points are used to specify locations. You can use a point as reference for creating other geometric elements. In the sketcher environment of Creo, you can create construction points and geometry points. The procedures of creating these points are discussed next.

Creating a Construction Point

Ribbon: Sketch > Sketching > Point

The construction points can be used only in the sketcher environment. To create a construction point, choose the **Point** tool from the **Sketching** group and click in the drawing area to place the point at the specified location.

Evaluation Copy. Do not reproduce. For information visit www.cadcim.com

Creating a Geometric Point

Ribbon: Sketch > Datum > Point

The **Point** tool available in the **Datum** group is used to create a geometric point. The points created by using this tool can also be used as a reference point in the Part modeling environment . The procedure to create a geometric point by using the **Point** tool from the **Datum** group is similar to the procedure of creating point from the **Sketching** group.

Note

1. To increase the number of visible command prompt lines in the message area, select the upper boundary line of the message area using the left mouse button and drag it upward, toward the screen.

2. When you place a single point, no dimension appears. But when you place two points, they are dimensioned with respect to each other.

Drawing Lines

You can draw a line by using the tools available in the **Line** drop-down. The **Line Chain** tool is used to create a line or chain of lines by selecting two points in the drawing area and the **Line Tangent** tool is used to create a tangent line between two entities.

The procedure to create lines by using these tools is discussed next.

Drawing a Line Using the Line Chain Tool

Ribbon: Sketch > Sketching > Line drop-down > Line Chain

The **Line Chain** tool is used to create a line or chain of lines. The following steps explain the procedure to create a line using the **Line Chain** tool available in the **Line** drop-down:

1. Choose the **Line Chain** tool or press the L key from the keyboard to invoke the tool. Click in the drawing area to start the line; a rubber-band line appears starting from the selected point with the other end attached to the cursor.

2. After specifying the start point of the line, move the cursor in the drawing area to the desired location. You will notice that the sketcher begins to dynamically apply constraints in your sketch. For example, if you sketch the line approximately vertical or horizontal, sketcher dynamically applies a vertical or horizontal constraint to that line, helping you to lock its position. Next, click to specify the endpoint of the line. The rubber-band line continues and you can draw the second line.

3. Repeat step 2 until all lines are drawn. You can end the line creation by pressing the middle mouse button. To abort the line creation, press the middle mouse button again. The start point and end point of the line or line chain are displayed in red colored dots.

Note

1. After drawing a line, when you press the middle mouse button twice to end the line creation, the line drawn is highlighted in green color. In the sketcher environment, the green color of an entity indicates that it is selected. If you press the DELETE key, the line will be erased from the drawing area.

Evaluation Copy. Do not reproduce. For information visit www.cadcim.com

2. After drawing a line, weak dimensions are applied to the sketch and they appear in light blue color. These weak dimensions are applied automatically to the sketched entities as you draw them. The concept of weak dimensions is discussed later in this chapter.

Drawing a Line Using the Line Tangent Tool

Ribbon: Sketch > Sketching > Line drop-down > Line Tangent

The **Line Tangent** tool is used to draw a tangent line between two entities such as arcs, circles, or ellipses. The following steps explain the procedure to draw a tangent using this tool:

1. Choose the **Line Tangent** tool from the **Line** drop-down in the **Sketching** group; you will be prompted to select the start point on an arc, a circle, or an ellipse.

2. Select the first entity from where the tangent line will be drawn; a rubber-band line appears with the cursor. Also, you will be prompted to select the end point on an arc, a circle, or an ellipse. On selecting the second entity, a line tangent to both the selected entities will be drawn.

Note

You can draw a tangent line only if there are two or more than two arcs, circles, or ellipses already drawn in drawing area.

Drawing a Centerline

You can draw a centerline by using the tools available in the **Centerline** drop-down. Click on the down arrow on the right of the **Centerline** tool; a menu will appear with two tools. The first tool is the **Centerline** tool which is used to create a centerline by selecting two points in the drawing area. A centerline is used for creating revolved features, mirroring, and so on. The second tool is the **Centerline Tangent** tool that enables you to create a tangent centerline which can be referenced in the sketcher environment. The procedures to draw centerlines using these two tools are discussed next.

Drawing a Centerline Using the Centerline Tool

Ribbon: Sketch > Sketching > Centerline drop-down > Centerline

You can draw horizontal, vertical, or inclined centerlines using the **Centerline** tool. The centerline in a sketch is used as an axis of rotation for mirroring, aligning, and dimensioning entities.

The steps to draw a centerline are discussed next.

1. In the **Sketching** group, choose the **Centerline** tool from the **Centerline** drop-down; you will be prompted to select the start point.

2. Click in the drawing area to specify the start point; you will be prompted to select the end point.

Evaluation Copy. Do not reproduce. For information visit www.cadcim.com

3. Click in the drawing area to specify the endpoint; a centerline of infinite length is drawn.

Drawing a Centerline Using the Centerline Tangent Tool

Ribbon: Sketch > Sketching > Centerline drop-down > Centerline Tangent

The **Centerline Tangent** tool is used to draw a centerline tangent to two entities such as arcs, circles, ellipses or a combination of them. To draw a tangent centerline using this tool, you need to follow the steps given below:

1. Choose the **Centerline Tangent** tool from the **Centerline** drop-down in the **Sketching** group; you will be prompted to select the start location on arc or circle.

2. Select the first entity from where the tangent line has to be drawn; a rubber-band line with the cursor will appear. Also, you will be prompted to select the end point on an arc or circle. As soon as you select the second entity, a centerline with infinite length tangent to both the selected entities is drawn.

Drawing a Geometry Centerline

Ribbon: Sketch > Datum > Centerline

The **Centerline** tool available in the **Datum** group is used to create centerlines as a part of the geometry. The centerline created by using this tool can be referenced outside the sketcher environment. The procedure to create a centerline by using the **Centerline** tool from the **Datum** group or from the **Sketching** group is same. The only difference between them is that the centerline created by using the **Centerline** tool is a geometric entity, not a sketch. To draw a geometric centerline, choose the **Centerline** tool from the **Datum** group. Next, specify the start and end points of the geometry centerline; a centerline of infinite length will be created in the drawing area.

Drawing a Rectangle

Ribbon: Sketch > Sketching > Rectangle drop-down

In Creo Parametric, there are four tools available in the **Rectangle** drop-down that can be used to draw different types of rectangles. These tools are **Corner Rectangle**, **Slanted Rectangle**, **Center Rectangle**, and **Parallelogram** which are explained next.

Note

*When a non-overlapping closed sketch is drawn then it appears to be filled with light orange color. It indicates that the sketch is closed. This happens because the **Shade Closed Loops** button in the **Inspect** group of the **Sketch** tab is chosen by default. You can deactivate this button by clicking on it.*

Creating a Corner Rectangle

Ribbon: Sketch > Sketching > Rectangle drop-down > Corner Rectangle

You can create a rectangle by using the two corner points. To create a rectangle by using the **Corner Rectangle** tool, you need to follow the steps given below:

Evaluation Copy. Do not reproduce. For information visit www.cadcim.com

1. Invoke the **Corner Rectangle** tool from the **Rectangle** drop-down; you will be prompted to select two points as corners of the rectangle. Click to specify the first point; a rubber-band box appears with the cursor attached to the opposite corner of the box.

2. Move the cursor diagonally in the drawing area and then click to specify the second point for the diagonal of the rectangle.

Creating a Slanted Rectangle

Ribbon: Sketch > Sketching > Rectangle drop-down > Slanted Rectangle

You can create an inclined rectangle by using the **Slanted Rectangle** tool. To create an inclined rectangle, you need to follow the steps given next.

1. Invoke the **Slanted Rectangle** tool from the **Rectangle** drop-down; you will be prompted to click LMB to define the start point of the first side of the parallelogram. Click to specify the first point; an orange rubber-band line will be displayed with the cursor attached to the end point of the line.

2. Next, click at any point to create the end point of first side of the box; you will be prompted to specify the end point of the second side.

3. Move the cursor perpendicular to the first line in the drawing area and then click to specify the second side for the rectangle.

Creating a Center Rectangle

Ribbon: Sketch > Sketching > Rectangle drop-down > Center Rectangle

You can create a rectangle with the help of a center and end points by using the **Center Rectangle** tool. To create a rectangle by using the **Center Rectangle** tool, you need to follow the steps given next:

1. Invoke the **Center Rectangle** tool from the **Rectangle** drop-down available in the **Sketching** group; you will be prompted to specify the center point of the rectangle. Click to specify the center point; an orange rubber-band box appears with the cursor attached to the end point of the diagonal of the box.

2. Click at any desired point in the drawing area to create the rectangle.

Creating a Parallelogram

Ribbon: Sketch > Sketching > Rectangle drop-down > Parallelogram

You can create a parallelogram by using the **Parallelogram** tool. To create a parallelogram, you need to follow the steps given next:

1. Invoke the **Parallelogram** tool from the **Rectangle** drop-down available in the **Sketching** group; you will be prompted to define the start point of the first side of parallelogram. Click to specify the start point; an orange rubber-band line will be displayed with the cursor attached to the end point of the line.

Evaluation Copy. Do not reproduce. For information visit www.cadcim.com

2. Click at any desired point to draw the first side of parallelogram; an orange rubber-band box will be displayed with the cursor attached to the end point of the second side of the parallelogram. Also, you will be prompted to specify the end point of the second line.

3. Click at any desired point to create the parallelogram.

Drawing a Circle

In Creo Parametric, you can draw circles by using the **Center and Point**, **Concentric**, **3 Point**, and **3 Tangent** tools. These tools are available in the **Circle** drop-down of the **Sketching** group. The procedure to create a circle using these tools is discussed next.

Drawing a Circle Using the Center and Point Tool

Ribbon: Sketch > Sketching > Circle drop-down > Center and Point

The **Center and Point** tool is used to draw a circle by specifying the center of the circle and a point on its circumference. The following steps explain the procedure to draw a circle using this tool.

1. Choose the **Center and Point** tool; you will be prompted to select the center of the circle.

2. Click in the drawing area to specify the center point of the circle; you will be prompted to select a point on the circumference of the circle. Also, an orange rubber-band circle will be displayed with the center at the specified point and the cursor attached to its circumference.

3. Move the cursor to specify the size of circle. Click at a desired point to complete the creation of the circle; you will be prompted again to select the center of the circle.

4. Repeat steps 2 and 3 if you want to draw more circles, else press the middle mouse button to abort the process.

Drawing a Circle Using the Concentric Tool

Ribbon: Sketch > Sketching > Circle drop-down > Concentric

The following steps explain the procedure to draw a concentric circle using the **Concentric** tool:

1. Choose the **Concentric** tool from the **Circle** drop-down in the **Sketching** group; you will be prompted to select an arc to determine the center. You can select any arc or a circle to specify the center point.

2. Click on an arc or a circle to determine the concentricity of the circle to be drawn. Move the cursor and click at the required location to specify the size of circle.

3. To finish the creation of the circle, press the middle mouse button.

Evaluation Copy. Do not reproduce. For information visit www.cadcim.com

Drawing a Circle Using the 3 Point Tool

Ribbon: Sketch > Sketching > Circle drop-down > 3 Point

The following steps explain the procedure to draw a circle using the **3 Point** tool:

1. Choose the **3 Point** tool from the **Circle** drop-down; you will be prompted to specify the first point on the circle.

2. Click to specify the first point at the desired location in the drawing area; you will be prompted to select the second point on the circle. Move the cursor and click to specify the second point in the drawing area.

3. As you select the second point, an orange rubber-band circle appears with the cursor attached to it and you are prompted to select the third point. Move the mouse to size the circle and click to specify the third point; a circle is drawn and you are prompted again to select the first point on the circle to draw the next circle.

4. To abort the process of circle creation, you can press the middle mouse button at any stage.

Drawing a Circle Using the 3 Tangent Tool

Ribbon: Sketch > Sketching > Circle drop-down > 3 Tangent

The **3 Tangent** tool is used to draw a circle tangent to three existing entities. This tool references other entities to draw a circle. The circle created using this tool is drawn irrespective of the points selected on the entities. The following steps explain the procedure to draw a circle using the **3 Tangent** tool:

1. Choose the **3 Tangent** tool from the **Circle** drop-down; you will be prompted to select the start location on an arc, circle, or line.

2. Select the first entity; the color of the entity changes to green and you will be prompted to select the end location on an arc, circle, or line. Select the second tangent entity; you will be prompted to select the third location on an arc, circle, or line. Select the third tangent entity; a circle tangent to these three entities is drawn.

3. To end the process of circle creation, press the middle mouse button.

Drawing an Ellipse

You can draw an ellipse by using the tools available in the **Ellipse** drop-down. The tools available in this drop-down are **Axis Ends Ellipse** and **Center and Axis Ellipse**. The steps to draw ellipse using these tools are discussed next.

Drawing an Ellipse Using the Axis Ends Ellipse Tool

Ribbon: Sketch > Sketching > Ellipse drop-down > Axis Ends Ellipse

The following steps explain the procedure to draw an ellipse by using the **Axis Ends Ellipse** tool:

Evaluation Copy. Do not reproduce. For information visit www.cadcim.com

1. Choose the **Axis Ends Ellipse** tool from the **Ellipse** drop-down; you will be prompted to select the start point of the major axis of the ellipse.

2. Click in the drawing area to specify the start point of the major axis; you will be prompted to select the endpoint of the major axis.

3. Click in the drawing area to specify the endpoint; an orange rubber-band ellipse will appear with the cursor attached to it. Also, you will be prompted to select a point on the minor axis to define the ellipse.

4. Click to specify the point; an ellipse will be created. You can press the middle mouse button to end the creation of the ellipse.

Drawing an Ellipse Using the Center and Axis Ellipse Tool

Ribbon: Sketch > Sketching > Ellipse drop-down > Center and Axis Ellipse

The following steps explain the procedure to draw an ellipse by using the **Center and Axis Ellipse** tool:

1. Choose the **Center and Axis Ellipse** tool from the **Ellipse** drop-down; you will be prompted to specify the center of the ellipse.

2. Click at the desired location in the drawing area to specify the center point; you will be prompted to select the endpoint of the major axis of the ellipse. Click in the drawing area to specify the point; an orange rubber-band ellipse will appear with the cursor attached to the ellipse. Move the cursor in the drawing area to size the ellipse.

3. Specify the endpoint on the minor axis of the ellipse; the ellipse is drawn. After exiting the command, the dimensions for the major radius and the minor radius will be displayed in light blue color. The light blue color indicates that the dimensions are weak.

Drawing an Arc

Creo Parametric provides five tools to draw an arc. These tools can be invoked from the **Arc** drop-down in the **Sketching** group. The procedures to draw arcs using these tools are discussed next.

Drawing an Arc Using the 3-Point / Tangent End Tool

Ribbon: Sketch > Sketching > Arc drop-down > 3-Point / Tangent End

The **3-Point / Tangent End** tool is used to draw arcs that are tangent from the endpoint of an existing entity, or by defining three points in the drawing area.

When you choose this tool to draw an arc from an endpoint, the **Target** symbol is displayed as you select an endpoint. The **Target** symbol is a green colored circle that is divided into four quadrants. The following steps explain the procedure to draw an arc from the endpoint of an existing entity by using this tool:

Evaluation Copy. Do not reproduce. For information visit www.cadcim.com

1. Choose the **3-Point / Tangent End** tool from the **Arc** drop-down; you will be prompted to select the start point of the arc.

2. Specify three points in the drawing area to draw an arc. If you want to draw an arc from the endpoint of an existing entity, select the endpoint of that entity. As you select the endpoint, the **Target** symbol appears at the endpoint of the entity. Move the cursor along the tangent direction through a small distance, a rubber-band arc appears with one end attached to the endpoint of the entity and the other end attached to the cursor. Note that when you move the cursor out of the **Target** symbol perpendicular to the endpoint, an arc is drawn by specifying three points. In this case, the rubber-band arc does not appear, refer to Figure 2-3.

   On the other hand, if you move the cursor out horizontally from one of the quadrants of the **Target** symbol, an arc is drawn tangent to the endpoint, as shown in Figure 2-4.

3. Move the cursor to the desired position in the drawing area to size the arc. Use the left mouse button to complete the arc.

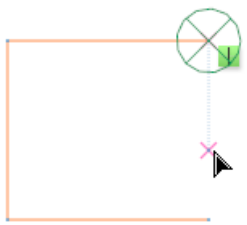

Figure 2-3 *Cursor moved out of the Target symbol perpendicular to the endpoint*

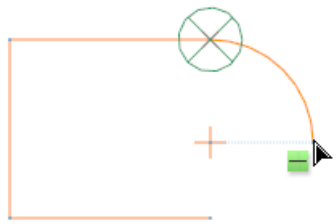

Figure 2-4 *Cursor moved out of the Target symbol along the tangent direction*



Tip

If you do not want to draw a tangent arc, move the cursor out of the ***Target*** *symbol perpendicular to the endpoint.*

Drawing an Arc Using the Center and Ends Tool

Ribbon: Sketch > Sketching > Arc drop-down > Center and Ends

The following steps explain the procedure to draw an arc using the **Center and Ends** tool:

1. Choose the **Center and Ends** tool from the **Arc** drop-down; you will be prompted to select the center of the arc.

2. Click to specify a center point for the arc in the drawing area; an orange colored center mark will appear at that point and you will be prompted to select the start point of the arc. As you move the cursor, a dotted circle appears attached to the cursor.

3. Specify the start point of the arc on the circumference of the dotted circle; an orange rubber-band arc will appear from the start point. The length of the arc will change dynamically as you move the cursor and you will be prompted to select the endpoint of the arc.

Evaluation Copy. Do not reproduce. For information visit www.cadcim.com

4. Move the cursor to specify the arc length and then click to select the endpoint of the arc; an arc will be drawn between the two specified points.



Note

You can draw only one arc with one center. If you want to draw another arc, you will have to select the center again.

Drawing an Arc Using the 3 Tangent Tool

Ribbon: Sketch > Sketching > Arc drop-down > 3 Tangent



The **3 Tangent** tool is used to draw an arc that is tangent to three selected entities. The following steps explain the procedure to draw an arc using this tool:

1. Choose the **3 Tangent** tool from the **Arc** drop-down; you will be prompted to select the start location on an arc, circle, or line.

2. As you move the cursor on the first entity or select the first entity, the color of the entity gets changed to green and you are prompted to select the end location on an arc, circle, or line.

3. On selecting the end location, you will be prompted to select a third location on an arc, circle, or line. Select the third entity; an arc is drawn tangent to the three selected entities.

You can continue drawing arcs or press the middle mouse button to abort arc creation.

Drawing an Arc Using the Concentric Tool

Ribbon: Sketch > Sketching > Arc drop-down > Concentric



The **Concentric** tool is used to draw an arc concentric to an existing arc. The entity selected must be an arc or a circle. The following steps explain the procedure to draw an arc using this tool:

1. Choose the **Concentric** tool from the **Arc** drop-down; you will be prompted to select an arc to determine the center of the arc to be created.

2. On moving the cursor on the first entity or selecting the entity a dotted circle will appear on the screen and you will be prompted to select the start point of the arc. Click to specify the start point; an orange rubber-band arc will appear with one end attached to the start point. As you move the cursor, the length of the arc will change and you will be prompted to select the endpoint of the arc.

3. Click to specify the endpoint; the arc will be created.

You can continue drawing another arc or end the arc creation by pressing the middle mouse button.

Evaluation Copy. Do not reproduce. For information visit www.cadcim.com

Drawing an Arc Using the Conic Tool

Ribbon: Sketch > Sketching > Arc drop-down > Conic

The **Conic** tool is used to draw a conic arc. The following steps explain the procedure to draw a conic arc using this tool:

1. Choose the **Conic** tool from the **Arc** drop-down; you will be prompted to specify the start point of the conic entity.

2. Click to specify the start point in the drawing area; you will be prompted to specify the endpoint of the conic entity.

3. Click to specify the endpoint; a centerline will be drawn between the two points and you will be prompted to specify the shoulder point of the conic. Specify a point on the screen; the conic arc will be drawn.

Note

1. If the conic arc is the only entity in the drawing area, then you cannot delete its centerline.

2. If you delete the centerline of the conic arc, the arc will not be deleted.

Drawing Construction Geometries

Ribbon: Sketch > Sketching > Construction Mode

Construction geometries are used to reference the solid geometries in sketches. Construction geometries can be dimensioned and constrained in the same manner as solid geometries. In Creo Parametric, the **Construction Mode** tool is used to toggle between the mode of creating solid geometry and construction geometry. When the **Construction Mode** is activated, any new geometry will be created as construction geometry. Note that you can also convert any solid sketched geometry entity into construction geometry and vice versa. To do so, select any sketched geometry and choose the **Toggle Construction** button from the mini toolbar.

DIMENSIONING THE SKETCH

The basic purpose of dimensioning is to locate and control the size of geometric entities with some reference. Dimensions are created to capture the design intent because these dimensions are displayed when you edit the model and when you create drawings of the model.

In Creo Parametric, sketched entities are dimensioned and constrained automatically while sketching. However, you need to add some additional dimensions and constraints to the sketch to make it fully constrained. The dimensioning tools are available in the **Dimension** group of the **Sketch** tab, refer to Figure 2-5. The **Dimension** tool in this group is used to manually dimension the entities.

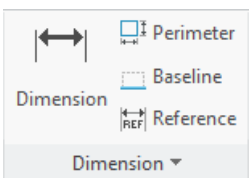

Figure 2-5 *The* ***Dimension*** *group*

Evaluation Copy. Do not reproduce. For information visit www.cadcim.com



Note

If you do not want the weak dimensions to be applied automatically, then clear the ***Show weak dimensions*** *check box from* ***File > Options > Sketcher > Object display settings****.*

Converting a Weak Dimension into a Strong Dimension

As discussed earlier when you draw a sketch, some weak dimensions are automatically applied to the sketch. These dimensions are displayed in light blue color. As you proceed to manually dimension the sketch, these weak dimensions are automatically deleted without any confirmation.

When you select a weak dimension from the drawing area the selected dimension will be highlighted in green color and a mini popup toolbar will be displayed near the selected dimension. From the mini popup toolbar, choose the **Strong** option, as shown in Figure 2-6, and press the middle mouse button; the select dimension will be converted into strong dimension. Alternatively, press CTRL+T to convert the selected dimension into a strong dimension. Note that a strong dimension is displayed in blue color.



Figure 2-6 *The* ***Strong*** *option in the dimension mini popup toolbar*

Dimensioning a Sketch Using the Dimension Tool

Ribbon: Sketch > Dimension > Dimension



The **Dimension** tool in the **Dimension** group of the **Sketch** tab is used for dimensioning the sketched entities, refer to Figure 2-5. The following steps explain the procedure to dimension a sketch using this option:

1. Choose the **Dimension** tool from the **Dimension** group. Click on the entity you want to dimension; the color of the entity changes from orange to green.

2. Move the cursor and Place the dimension at a desired place by double-clicking the middle mouse button. Before placing the dimension, you can change its value by clicking MMB once and then specifying the value.

Note that you can also change the dimension value using the **Modify** option that will be discussed later in this chapter.



Tip

You can also manually dimension the entities by using the dimensioning options available in the mini popup toolbar which appears when you select one or more sketched geometries.

Dimensioning the Sketched Entities

To dimension the sketched entities, you need to choose the **Dimension** tool from the **Dimension** group of the **Sketch** tab and follow the procedures given below.

Linear Dimensioning of a Line

You can dimension a line by selecting its endpoints or by selecting the line itself. After selecting the two endpoints or the line, press the middle mouse button twice to place the dimension at

Evaluation Copy. Do not reproduce. For information visit www.cadcim.com

desired location. If the line is inclined and you select the two endpoints to dimension, then the location where you press the middle mouse button defines the orientation of the dimension that will be displayed on the screen.

Figure 2-7 shows the three possible orientations of dimension that can be displayed when you dimension a line.



Note

It is not possible to dimension a line in three orientations simultaneously in the sketcher environment. The dimensions in Figure 2-7 are shown for explanation purpose only.

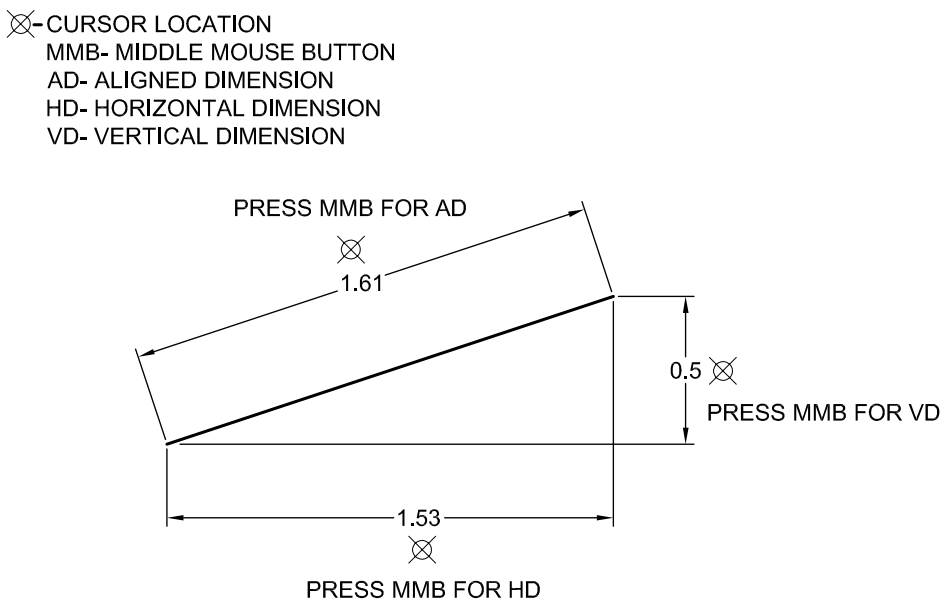

Figure 2-7 *Approximate locations of the cursor to achieve different dimensions between the end points of a line*

Dimensioning of an Arc

An arc is dimensioned by specifying the arc length or arc angle. To add angular dimension to an arc, select one end, centre point, and then select the other end of the arc. Next, place the dimension at the desired point by pressing the middle mouse button twice, as shown in Figure 2-8. If you select both ends of an arc and then select the arc itself, the dimension placed will be length of the arc, as shown in Figure 2-9. If you want to convert the angular dimension into arc length and vice versa, then select the dimension and choose the **Angle** or **Length** option from the mini popup toolbar.

Evaluation Copy. Do not reproduce. For information visit www.cadcim.com

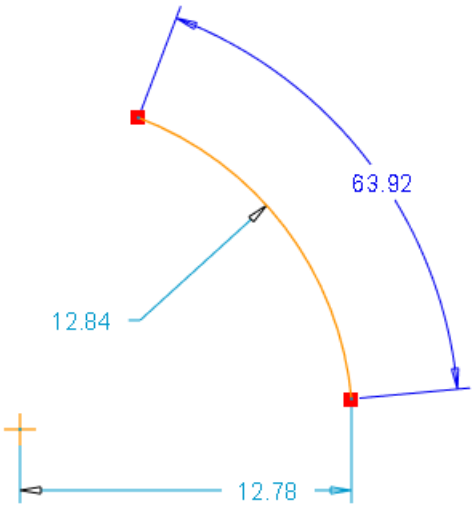

Figure 2-8 *Angular dimension of an arc*

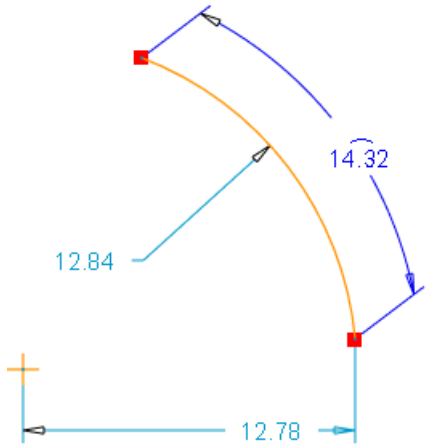

Figure 2-9 *Dimensioning of arc length*

Dimensioning of a Conical Arc

A conic is dimensioned by specifying its rho value that represents its conical sections. The rho value varies from 0 to 1. If the value is less than 0.5, the section will be elliptical; if rho value is 0.5, the section will be parabola; and if rho is greater than 0.5, the section will be hyperbola. To add rho dimension to a conical arc, select the conical arc. Next place the dimension at desired point by pressing the middle mouse button twice, as shown in Figure 2-10.

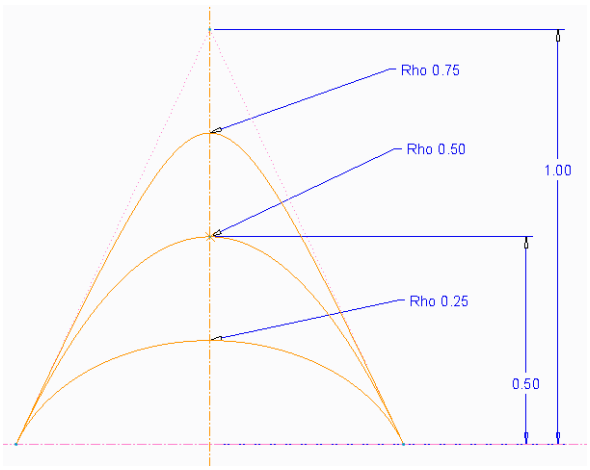

Figure 2-10 *Conical dimensioning*

Note that in Creo Parametric, you can entre the dimension value for a conical section varies from 0.05 to 0.95.

Evaluation Copy. Do not reproduce. For information visit www.cadcim.com

Diameter Dimensioning

For diameter dimensioning, click on a circle. Then place the dimension at the desired location by pressing the middle mouse button twice. The diameter dimension will be displayed, as shown in Figure 2-11. Alternatively, you can also click on the circle and choose the **Diameter** option from the mini toolbar, as shown in Figure 2-12. This method can also be used for dimensioning arcs.

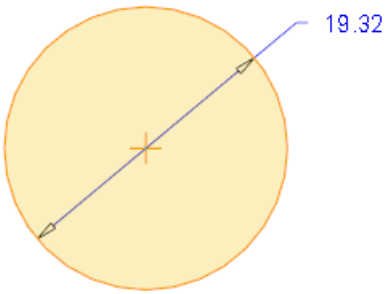

Figure 2-11 *Diameter dimensioning*

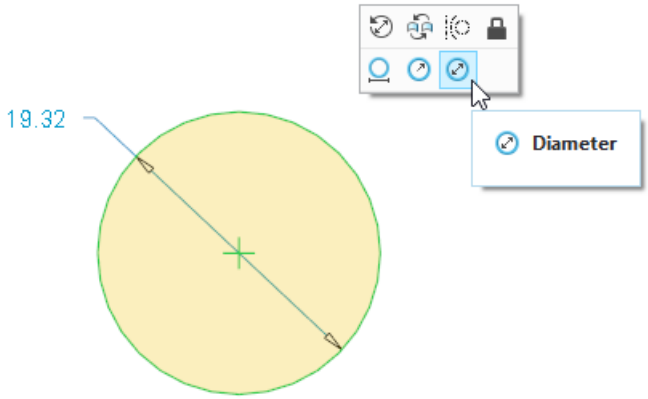

Figure 2-12 *Dimensioning using the* ***Diameter*** *option of the mini toolbar*

Radial Dimensioning

For radial dimensioning, click on the arc once. Then, place the dimension at the desired location by pressing the middle mouse button twice. The radial dimension will be displayed, as shown in Figure 2-13.

Dimensioning of Revolved Sections

Revolved sections are used to create revolved features such as flanges, couplings, and so on. To dimension a revolved section, click on the entity to be dimensioned. Next, select the centerline about which you want the section to be revolved and again, select the original entity that you want to dimension. Now, place the dimension at the desired location by pressing the middle mouse button twice. Figure 2-14 shows the dimension placed in a revolved section. This dimension represents the diameter of a revolved section.

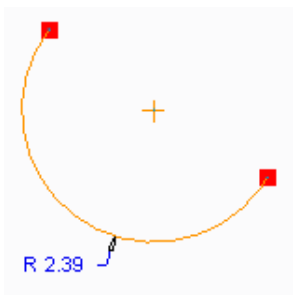

Figure 2-13 *Radial dimensioning*

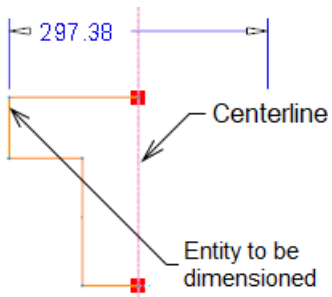

Figure 2-14 *Dimensioning the revolved sections*

Evaluation Copy. Do not reproduce. For information visit www.cadcim.com

Angular Dimensioning

To specify angular dimensions, you need to select two lines and then place the dimension at the desired location in the drawing area by pressing the middle mouse button twice. Note that the location where you press the middle mouse button specifies the outer or inner angle between the lines.

WORKING WITH CONSTRAINTS

Constraints are rules that are enforced on the sketched geometries. In other words, constraints are the logical operations that are performed on the selected geometries to fully define their size, shape, orientation, and location with respect to other geometries. One of the key benefits of using constraints in a sketch is that it reduces the number of dimensions that are required to fully constraint that sketch.

Creo Parametric automatically applies some constraints to geometries while sketching. For example, if you are creating a line which is nearly parallel to another line, Creo Parametric will automatically place and highlight the parallel constraint symbol on the line being created. If you confirm the line creation, a line will be drawn parallel to the other line. Alternatively, you can also apply constraints manually. The procedure to do so is discussed next.

Types of Constraints

There are two types of constraints in Creo Parametric: **Geometry** and **Assembly**. In this chapter, you will learn about the **Geometry** constraints only and the **Assembly** constraints will be discussed in later chapters.

The geometric constraints are available in the **Constrain** group of the **Sketch** tab. The tools available in this group are shown in Figure 2-15.

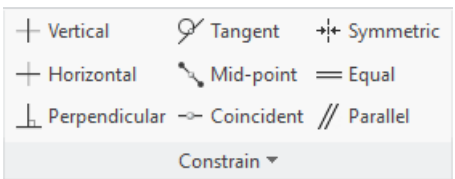

Figure 2-15 *The constraints in the* ***Constrain*** *group*



Note

*In Creo Parametric, the name of tools in several workbenches is displayed only in high screen resolution systems, such as 1900*1200 and 2880x1800. If the resolution is low, then onlyonly symbols are displayed.*

The constraints in this group are used to apply constraints manually. Although, some constraints are applied automatically as you draw the sketch. You can use the tools in this group to manually apply additional constraints to the sketch. The constraints in the group are discussed next.

Evaluation Copy. Do not reproduce. For information visit www.cadcim.com

Vertical

This constraint forces the selected line segment to become a vertical line. This constraint also forces the two vertices to be placed along a vertical line.

Horizontal

This constraint forces the selected line segment or two vertices that are apart by some distance to become horizontal or to lie in a horizontal line.

Perpendicular

This constraint forces the selected entity to become normal to another selected entity.

Tangent

This constraint forces the two selected entities to become tangent to each other.

Mid-point

This constraint forces a selected point or vertex to lie on the middle of a line.

Coincident

This constraint can be used to force the two selected points to become coincident. You can also apply this constraint to make two selected entities collinear, so that they lie on the same line.

Symmetric

This constraint makes a section symmetrical about the centerline. When you select this constraint, you will be prompted to select a centerline and two vertices to make them symmetrical.

Equal

This constraint forces any two selected entities to become equal in dimension. When you select this constraint, you will be prompted to select two lines to make their lengths equal, or you will be prompted to select two arcs, circles, or ellipses to make their radii equal.

Parallel

This constraint is used to force two lines to become parallel. When selected, this constraint prompts you to select two entities that you want to make parallel.

Disabling the Constraints

The need to disable a constraint arises while drawing an entity. For example, consider a case where you want to draw a circle at some distance apart from another circle. While drawing it, the system tends to apply the equal radius constraint when the sizes of the two circles become equal. At this moment, if you do not want to apply the equal radius constraint, right-click twice to disable the equal radius constraint; a cross will appear with the constraint notifying that the constraint is disabled. However, if you right-click once, the constraint will get locked and a lock symbol will appear with the constraint.

Evaluation Copy. Do not reproduce. For information visit www.cadcim.com



Tip

You can also press and hold the SHIFT key to disable the snapping of new constraint during sketching. If there are more than one snapping constraints while sketching, you can use the TAB key to toggle between the constraints.

MODIFYING THE DIMENSIONS OF A SKETCH

There are three ways to modify the dimensions of a sketch. These methods are discussed next.

Using the Modify Tool

Ribbon: Sketch > Editing > Modify



You can select one or more dimensions from the sketch to modify them. When you select dimension(s) from a sketch, they are highlighted in green. If you want to select more than one dimension, hold the CTRL key and select the dimensions by clicking on them. You can also use the CTRL+ALT+A keys or define a window to select all dimensions in the sketch. After selecting the dimension(s), choose the **Modify** tool from the **Editing** group; the **Modify Dimensions** dialog box will be displayed, as shown in Figure 2-16. Alternatively, invoke the **Modify Dimensions** dialog box by pressing the CTRL+A keys and then clicking on a dimension.

To modify dimensions by using the **Modify Dimensions** dialog box, you can either enter a value in the edit box or use the thumbwheel available on the right of the edit box. The **Sensitivity** slider is used to set the sensitivity of the thumbwheel.

By default, the **Regenerate** check box is selected. As a result, any modifications in the dimensions are automatically updated in the sketch. If you want to modify the dimensions of the sketch without regenerating the sketch, you need to clear this check box. If this check box is cleared, the dimensions will not be modified until you exit this dialog box. This means that Creo Parametric allows you to make multiple modifications before updating the sketch.

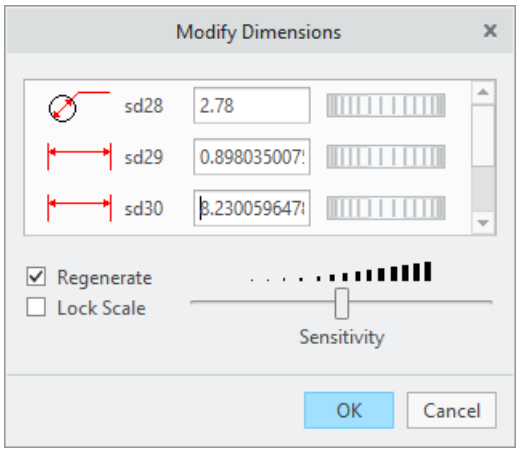

***Figure 2-16** The **Modify Dimensions** dialog box*

The **Lock Scale** check box is used to lock the scale of the selected dimensions. After locking the scale, if you modify any dimension, all other dimensions will also be modified by the same scale.

Evaluation Copy. Do not reproduce. For information visit www.cadcim.com



Tip

*It is recommended that you clear the **Regenerate** check box and then modify the dimensions if you need to modify more than one dimension. Also, when the dimensions you specify vary drastically with the original ones.*

Modifying a Dimension by Double-Clicking

You can also modify a dimension by double-clicking on it. When you double-click on a dimension, the pop-up text field appears. Enter a new dimension value in this field and press ENTER or use the middle mouse button. Remember that you can select a dimension only when you choose the **One-by-One** selection filter.

Modifying Dimensions Dynamically

In the sketcher environment, Creo Parametric is always in the selection mode, unless you have invoked some other tool. When you bring the cursor to an entity, the color of the entity changes to green. Now, if you hold down the left mouse button, you can modify the entity by dragging the mouse. You will notice that as the entity is modified, the dimensions referenced to the selected entity are also modified.



Tip

In Creo Parametric, you can modify the dimensions by using the mini popup toolbar which appears when you select any dimension(s) or entity(s).

LOCKING DIMENSIONS AND ENTITIES

By locking of dimensions and entities, you can avoid modifications made to the sketches by accidentally dragging a vertex or an entity. In the locked state, the dimension(s) or entity(-ies) remains unchanged when you quit or re-enter the **Sketch** mode. To lock or unlock dimension(s) or entity(-ies), select dimension(s) or entity(-ies) and choose the **Toggle Lock** option from the mini popup toolbar; the dimension(s) or entity(-ies) will be locked. The locked dimension is highlighted in red color. You can also set the **Sketch** mode to lock all user-defined dimensions automatically by selecting the **Lock user defined dimensions** check box in the **Sketcher** tab of the **Creo Parametric Options** dialog box. After setting this option, all dimensions that you subsequently create or modify will be locked automatically.

RESOLVE SKETCH DIALOG BOX

While applying constraints or dimensions, sometimes the system may prompt you to delete one or more highlighted dimensions or constraints. This is because while adding dimensions or constraints, some strong dimensions or constraints conflict with the existing dimensions or constraints. As the conflict occurs, the **Resolve Sketch** dialog box is displayed, as shown in Figure 2-17. When you select a dimension or a constraint from the **Resolve Sketch** dialog box, the corresponding dimension or constraint in the drawing area is enclosed in a blue box.

Evaluation Copy. Do not reproduce. For information visit www.cadcim.com

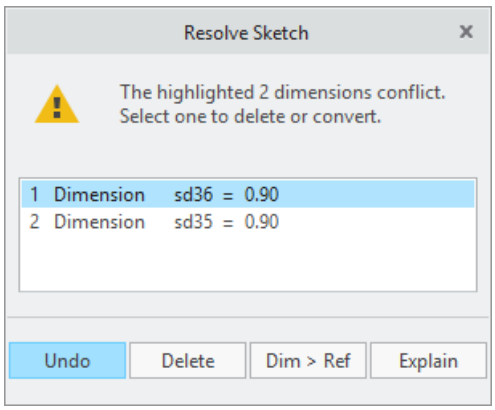

***Figure 2-17** The **Resolve Sketch** dialog box*

The buttons in the **Resolve Sketch** dialog box are discussed next.

Undo

When you choose the **Undo** button, the section is brought back to the state that it was in just before the conflict occurred.

Delete

The **Delete** button is used to delete a selected dimension or constraint that is enclosed within the blue box. To delete a dimension or a constraint, select it from the blue box and choose the **Delete** button from the **Resolve Sketch** dialog box.

Dim > Ref

On choosing the **Dim > Ref** button, the selected dimension is converted to a reference dimension.

Note

The reference dimensions are used only for reference and are not considered in feature creation.

Explain

When you choose the **Explain** button, the system provides you with the information about the selected constraint or dimension. The information will be displayed in the message area.

DELETING THE SKETCHED ENTITIES

To delete one or more sketched entities, select entities and hold down the right mouse button in the drawing area to invoke a shortcut menu. Next, choose the **Delete** option from this menu to delete the selected item. You can also delete multiple items by specifying a window. To specify a window, press and hold the left mouse button and drag the cursor to the opposite corner in the drawing area. The entities that are enclosed inside the window will get selected and the color of the selected entities changes to green. After selecting the entities, hold down the right mouse button in the drawing area to invoke a shortcut menu and choose the **Delete** option to delete the selected item.

Evaluation Copy. Do not reproduce. For information visit www.cadcim.com

You can also delete one or more than one items from the drawing area by using the DELETE key. To do so, press and hold the CTRL key and click on the entities to be deleted. Next, press the DELETE key to delete the selected entities. Alternatively, you can specify a window around the selected entities and then press the DELETE key to delete entities.



Note

It is necessary to be in the selection mode while selecting the items. The term "items" used in this chapter refers to dimensions and entities. The ***Sketcher Geometry***, ***Dimension***, *and* ***Constraint*** *filters are available in the drop-drown list located in the* ***Status Bar***. *These filters narrow down your search and help you to select the exact item. This means if you want to select all constraints in the sketch, choose the* ***Constraint*** *filter and specify a window to select. You will notice that only the constraints are selected in the sketch.*

TRIMMING THE SKETCHED ENTITIES

While creating a design, there are a number of places where you need to remove the unwanted and extended entities. You can do this by using the trimming tools that are available in the **Editing** group. These tools are discussed next.

Delete Segment

Ribbon: Sketch > Editing > Delete Segment



This tool is used to trim the entities that extend beyond the point of intersection. You can also use this tool to delete the selected entities. To trim or delete any entity, choose the **Delete Segment** tool from the **Editing** group and click on the entity to be trimmed or deleted. With the help of this tool, you can also trim and delete the entities dynamically. To do so, press and hold the left mouse button and move the cursor over the entities to be trimmed or deleted, refer to Figure 2-18 and Figure 2-19.

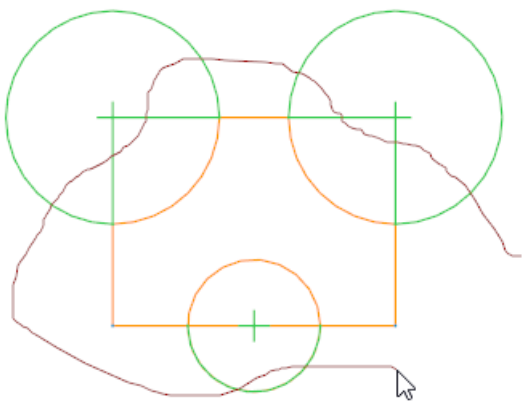

Figure 2-18 *Trimming the entities dynamically*

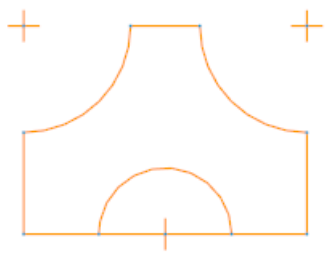

Figure 2-19 *The resulting sketch*

Evaluation Copy. Do not reproduce. For information visit www.cadcim.com

Corner

Ribbon: Sketch > Editing > Corner

The **Corner** tool is used to trim two entities at the corners. Note that when you trim entities using this option, the portion from where you select the entities is retained and the other portion is trimmed. The following steps explain the procedure to trim entities using this button:

1. Choose the **Corner** tool from the **Editing** group; you will be prompted to select two entities to be trimmed.

2. Click to select the two entities on the sides that you want to keep after trimming, refer to Figure 2-20. These two entities must be intersecting entities. The entities are trimmed from the point of intersection.

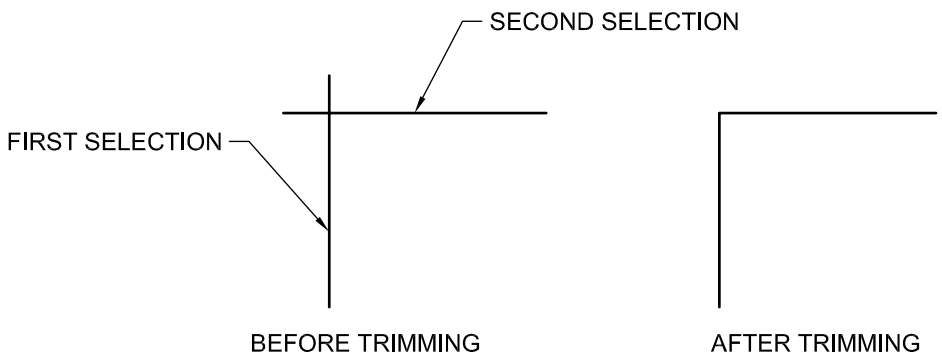

Figure 2-20 *Trimming the lines by using the* ***Corner*** *tool*

Divide

Ribbon: Sketch > Editing > Divide

The **Divide** tool is used to divide an entity into a number of parts by specifying points on the selected entity.

The following steps explain the procedure to divide an entity:

1. Choose the **Divide** tool from the **Editing** group; you will be prompted to specify a point on an entity.

2. Select a point on an entity to divide it. The divided entities can now be treated as two separate entities. Similarly, you can break other entities like circles or arcs into several small entities.

MIRRORING THE SKETCHED ENTITIES

Ribbon: Sketch > Editing > Mirror

The **Mirror** tool is used to mirror the sketched geometries about a centerline. This tool helps you to reduce the time utilized in creating symmetrical geometries and dimensions.

Evaluation Copy. Do not reproduce. For information visit www.cadcim.com

The procedure to mirror the sketched geometry is explained next:

1. Sketch a geometry and then sketch a centerline about which you need to mirror the geometry.

2. Select the entities that you need to mirror; the selected entities turn green in color.

3. Choose the **Mirror** tool from the **Editing** group; you will be prompted to select the centerline about which you need to mirror. Select the centerline; the selected entities will be mirrored about the centerline.



Tip

In case of symmetrical parts, you can save time involved in dimensioning and constraining a sketch by dimensioning half of the section and then mirroring it. Creo Parametric will assume that the mirrored half has the same dimensions and constraints as the sketched half.

INSERTING STANDARD/USER-DEFINED SKETCHES

Ribbon: Sketch > Sketching > Palette

The **Palette** enables you to quickly insert commonly used basic shapes, such as polygons, profiles, shapes, stars, and other previously created sketches in the **Sketch** mode, thus minimizing the time for repetitive sketching.

The steps that explain the procedure to insert a foreign entity in the **Sketch** mode are given next.

1. Choose the **Palette** tool from the **Sketching** group; the **Sketcher Palette** dialog box will be displayed, as shown in Figure 2-21. The options in this dialog box are used to insert a previously created sketch.

2. To insert a sketch from the sketcher palette in the current sketch, drag and drop it, or double-click on the required sketch from the list in the dialog box. Next, click anywhere in the drawing area; the **Import Section** tab will be displayed in the **Ribbon**. Also, the move, rotate, and scale handles will be displayed on the imported sketch automatically.

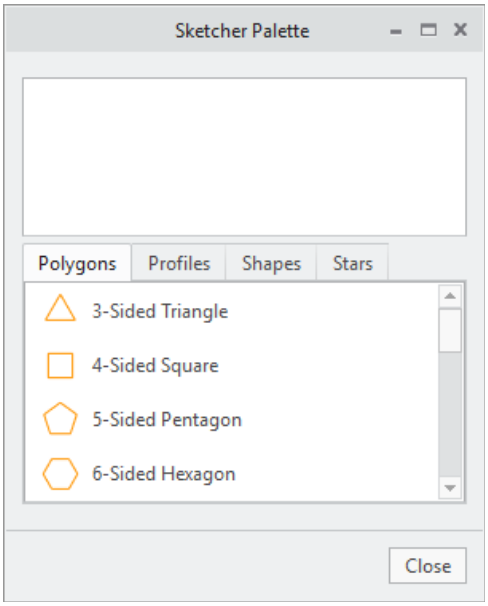

***Figure 2-21** The **Sketcher Palette** dialog box*

3. In the **Import Section** tab, enter the scale valuein the **Scale** edit box and the rotational angle value in the **Rotate** edit box. Alternatively, left-click on the required handle on the sketch and drag; the corresponding action will take place dynamically. The move handle also acts as the pivot point for rotation and scale. However, you can relocate the pivot point. To move the pivot point, right-click on the pivot point and drag it to the required location and then release the right-click; the pivot point will be relocated.

Evaluation Copy. Do not reproduce. For information visit www.cadcim.com

4. Next, choose the **OK** button to exit.

5. Choose the **Close** button from the **Sketcher Palette** dialog box to accept the sketch inserted. Else, repeat the steps 2 - 4 to continue inserting more sketches in the drawing area.

Similarly, you can add the sketches from the **Polygons**, **Profiles**, **Shapes**, and **Stars** tabs.



Note

*If you have selected a working directory which contains only .sec files, a tab with the name of the working directory is displayed in the **Sketcher Palette** dialog box and also will be chosen by default. On the other hand, if you have selected a working directory which contains other types of files, the same tab will be displayed in the end and the **Polygon** tab will be chosen by default, refer to Figure 2-21.*

DRAWING DISPLAY OPTIONS

While working with complex sketches, sometimes you need to increase the display of a particular portion of a sketch so that you can work on the minute details of the sketch. For example, you are drawing sketch of a piston and you have to work on the minute details of the grooves for the piston rings. To work on these minute details, you have to enlarge the display of these grooves. You can enlarge or reduce the drawing display using various drawing display tools provided in Creo Parametric. These tools are available in the **Graphics** toolbar as well as in the **View** tab. Some of these drawing display options are discussed next, and the remaining drawing display options will be discussed in later chapters.

Zoom In

Ribbon: View > Orientation > Zoom In



This tool is used to enlarge the view of the drawing on the screen. After choosing the **Zoom In** tool from the **Orientation** group, you will be prompted to define a box. The area that you will enclose inside the box will be enlarged and displayed in the drawing area. Note that when you enlarge the view of the drawing, the original size of the entities will not be changed. To exit the **Zoom In** tool, right-click in the drawing area.

Zoom Out

Ribbon: View > Orientation > Zoom Out



This tool is used to reduce the view of the drawing on the screen, thus increasing the drawing display area. Each time you choose this button, the display of the sketch in the drawing area is reduced. This button is available in the **Orientation** group.



Tip

You can use the mouse scroll wheel to zoom in and out the view. One more method to zoom in and out is to use the middle mouse button and the CTRL key. To zoom in and zoom out, press and hold CTRL+middle mouse button and drag the mouse downward and upward.

Evaluation Copy. Do not reproduce. For information visit www.cadcim.com

Refit

Ribbon: View > Orientation > Refit



This tool is available in the **Orientation** group. This tool is used to reduce or enlarge the display such that all entities that comprise the sketch are fitted inside the current display. Note that the dimensions may not be necessarily included in the current display.

Repaint

Ribbon: View > Display > Repaint



While working with complex sketches, some unwanted temporary information is retained on the screen. The unwanted information may include the shadows of the deleted sketched entities, dimensions, and so on. This unwanted information can be removed from the drawing area by using the **Repaint** button available in the **Display** group or from the **Graphics** toolbar in model display.

Sketcher Display Filters

While working with the sketches, sometimes you need to disable the display of some of the sketcher components such as dimensions, constraints, vertices, and so on. To disable or enable their display, you can use the toggle buttons available in the **Graphics** toolbar. These buttons are discussed next.

Dimensions Display

Ribbon: View > Display > Dimensions Display



You can use this button to enable or disable the display of dimension on the screen.

Constraints Display

Ribbon: View > Display > Constraint Display



You can use this button to enable or disable the display of geometric constraints.

Vertices Display

Ribbon: View > Display > Vertex Display



You can use this button to enable or disable the display of vertices on a sketch or a model.

Grid Display

Ribbon: View > Display > Grid Display



You can use this button to enable or disable the display of sketching grid. Sometimes you may not be able to see the grid as it becomes very dense. To see the grid in such cases, you need to zoom in the screen.

Evaluation Copy. Do not reproduce. For information visit www.cadcim.com



Note

1. To remove the temporary information, you can repaint the screen by choosing the ***Repaint*** *tool from the* ***Graphics*** *toolbar or pressing the CTRL+R keys.*

2. In the ***Sketch*** *mode, you can pan the sketch using the middle mouse button but in the* ***Part*** *mode, use SHIFT+middle mouse button to pan the model.*

TUTORIALS

Tutorial 1

In this tutorial, you will draw the sketch for model shown in Figure 2-22. The sketch of the model is shown in Figure 2-23. **(Expected time: 30 min)**

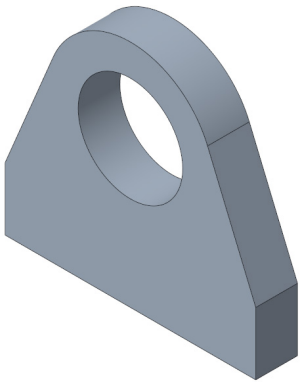

Figure 2-22 *Model for Tutorial 1*

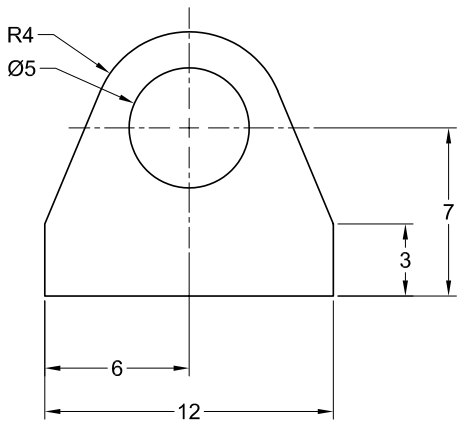

Figure 2-23 *Sketch of the model*

The following steps are required to complete this tutorial:

a. Start Creo Parametric session.
b. Set the working directory and create a new sketch file.
c. Draw lines by using the **Line Chain** tool, refer to Figures 2-24 and 2-25.
d. Draw an arc and a circle, refer to Figures 2-26 through 2-28.
e. Dimension the sketch and then modify the dimensions of the sketch, refer to Figure 2-28.
f. Save the sketch and close the file.

Starting Creo Parametric

1. Start Creo Parametric by double-clicking on the **Creo Parametric** icon on the desktop of your computer.

Setting the Working Directory

After the Creo Parametric session is started, the first task is to set the working directory. A working directory is a directory on your system where you can save the work done in the current session of Creo Parametric. You can set any existing directory on your system as the working directory. Since it is the first tutorial of this chapter, you need to create a folder with the name *c02*.

Evaluation Copy. Do not reproduce. For information visit www.cadcim.com

1. Choose the **Select Working Directory** option from the **Manage Session** flyout of the **File** menu; the **Select Working Directory** dialog box is displayed.

2. In this dialog box, browse to *C:\Creo-5.0* folder. If this folder does not exist, create this folder before setting the working directory.

   For selecting *C:\Creo-5.0,* click on the arrow at the right of the **C:** option in the top address box of the **Select Working Directory** dialog box; the folders in the **C** drive are displayed in a flyout. Now, choose **Creo-5.0** from the flyout, refer to Figure 2-24. Alternatively, you can use the **Folder Tree** node available at the bottom left corner of the screen to set the working directory. To do so, click on the **Folder Tree** node; the **Folder Tree** expands. In the **Folder Tree**, browse to the desired location using the nodes corresponding to the folders. Select the required folder and choose the **OK** button; the selected folder will become the current working directory.

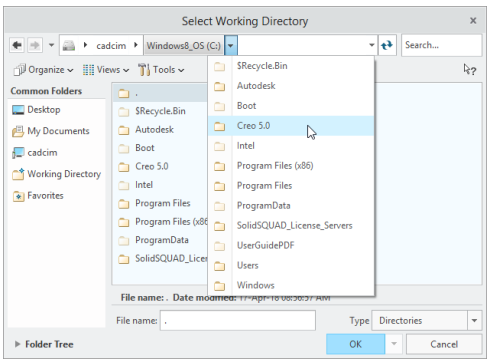

***Figure 2-24** The **Creo5.0** folder chosen from the flyout*

3. Choose the **Organize** button from the top pane of the **Select Working Directory** dialog box to display the flyout. From the flyout, choose the **New Folder** option; the **New Folder** dialog box is displayed.

4. Enter **c02** in the **New Directory** edit box and choose the **OK** button from the **New Folder** dialog box; a new folder named *c02* is created in ***C:\Creo-5.0*** location.

5. Choose the **OK** button from the **Select Working Directory** dialog box to set the working directory to *C:\Creo-5.0\c02*; the message **Successfully changed to C:\Creo-5.0\c02 directory** is displayed in the message area.

Starting a New Object File

Any sketch drawn in the **Sketch** mode is saved with the *.sec* file extension. This file format is one of the file formats available in Creo Parametric.

1. Choose the **New** button from the **Data** group in the **Ribbon** or **Quick Access** toolbar or press CTRL+N; the **New** dialog box is displayed. In this dialog box, select the **Sketch** radio button from the **Type** area; the default name of the sketch appears in the **Name** edit box.



2. Enter **c02tut01** in the **Name** edit box and choose the **OK** button.

   You are in the sketcher environment of the **Sketch** mode. When the **Sketch** mode is invoked, the **Show Navigator** is displayed on the left in the drawing area.

3. Choose the **Show Navigator** button available at the bottom left corner of the screen to close the **Show Navigator**. On closing the tree, the drawing area is increased.



Evaluation Copy. Do not reproduce. For information visit www.cadcim.com

Drawing the Lines of the Sketch

You need to start drawing the sketch with the right vertical line.

1. Choose the **Line Chain** tool from the **Line** drop-down available in the **Sketching** group.

2. Specify the start point by clicking on the right in the drawing area. One end of the line is attached to the cursor. Move the cursor down to an approximate length.

   Notice that when the cursor moves vertically downward, a green colored symbol | appears in the drawing area, next to the line. Now, if you draw a line, the vertical constraint will be applied to it.

3. Click to specify the endpoint of the line. The vertical constraint is applied to the line, but it is not visible in the drawing area until the line creation is active.

   Also, another rubber-band line is attached to the cursor with its start point at the endpoint of the last line.

4. Move the cursor horizontally toward the left; a horizontal rubber-band line extends to the left as you move the mouse.

   Notice that when the cursor moves horizontally toward the left, a green colored symbol — appears in the drawing area next to the line. Now, if you draw a line, a horizontal constraint will be applied to it.

5. After getting the desired size of the line created, click to end the line. The horizontal constraint is applied to the line, but it is not visible in the drawing area until the line creation is active.

6. Move the cursor upward in the drawing area; a vertical rubber-band line extends as you move the mouse. As you move the cursor upward, you will notice that at a particular point where the length of the left vertical line is equal to the length of the right vertical line, a = symbol is displayed on the vertical line being created and the right line is highlighted in green color. This symbol suggests that the equal length constraint is applied to the two vertical lines.

7. When equal constraint appears on the vertical line, click to specify the endpoint of the vertical line. The rubber-band line is still attached to the cursor.

   You can also apply constraints later. However, to save an extra step of adding the constraints, you will use the constraints that are applied automatically while drawing.

8. Move the cursor to size the line and specify the endpoint of the left inclined line, as shown in Figure 2-25.

9. Press the middle mouse button to end the line creation.

Evaluation Copy. Do not reproduce. For information visit www.cadcim.com

10. The line option is still active. Move the cursor close to the top end of the right vertical line; the cursor snaps to the point that is at equal length of the left vertical line. Select the point by clicking.

11. Size the inclined line and specify the endpoint of the right inclined line. Press the middle mouse button twice; lines are created and all the constraints that you have applied become visible, refer to Figure 2-26. Now, you need to draw the arc and the circle.

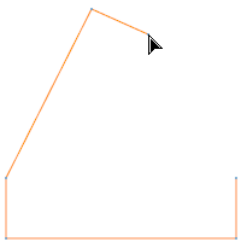

Figure 2-25 *Sketch with left inclined line*

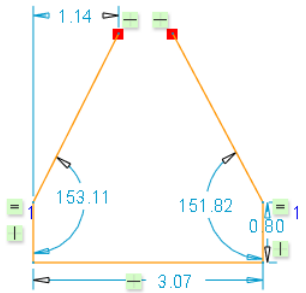

Figure 2-26 *Sketch of the line drawn with weak dimensions*

Note

1. The numbers in blue color with the constraint symbols refer to the label assigned to same type of constrained geometries in the sketch.

2. The horizontal — and equal constraint = appear in green color when selected. The label with the constraint appears in blue color which indicates that the constraint is strong. This means you cannot change the orientation of the line until you delete the constraint applied to the line.

Drawing the Arc

1. Choose the **3-Point/Tangent End** tool from the **Arc** drop-down in the **Sketching** group; you are prompted to select the start point of the arc.

2. Select the endpoint of the left inclined line; the Target symbol appears in green color.

3. Move the cursor along the tangent direction through a small distance; a rubber-band arc that is tangent to the inclined line appears. Move the cursor to the endpoint of the right inclined line and click on the end point of the right inclined line to create the arc. As you exit the **Arc** tool, the tangent constraint is applied to the end points of the arc which is indicated by the symbol .

Note

1. The weak dimensions in Figure 2-26 are not displayed in Figure 2-27 because after an arc is drawn, some of the weak dimensions automatically get deleted.

*2. If the tangent constraint symbol is not displayed on any of the inclined lines, apply the constraint manually by choosing the **Tangent** button from the **Constrain** group.*

Evaluation Copy. Do not reproduce. For information visit www.cadcim.com

Drawing the Circle

1. Choose the **Concentric** tool from the **Circle** drop-down; you are prompted to select an arc.

2. Select the arc by clicking on it. Move the mouse; a circle appears.

3. Click to select a point inside the sketch to draw the circle.

4. Press the middle mouse button to end the circle creation. The sketch is completed.

Dimensioning the Sketch

The right vertical line, the bottom horizontal line, the arc, and the circle are dimensioned automatically and the weak dimensions are applied to them. You will use these dimensions. Hence, there is no need to dimension these entities again.

1. Choose the **Dimension** tool from the **Dimension** group.



2. Select the center of the arc and then the bottom horizontal line; the center turns red and the line turns green in color.

3. Place the dimension on the right of the sketch by pressing the middle mouse button.

4. Select the center of the arc and then the left vertical line; the center turns red and the vertical line turns green in color.

5. Press the middle mouse button to place the dimension below the sketch, refer to Figure 2-28.

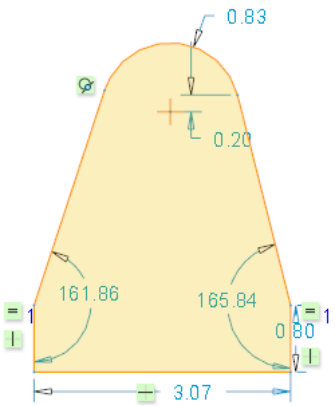

Figure 2-27 *Sketch with arc*

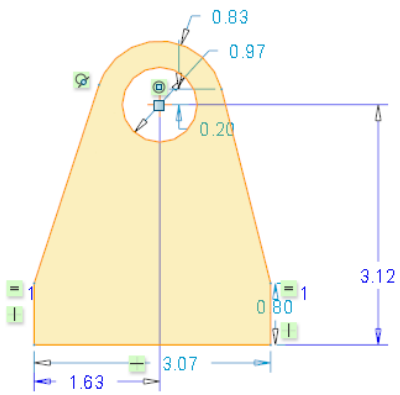

Figure 2-28 *Sketch with all the entities, weak dimensions, and weak constraints*

Modifying the Dimensions

The sketch is dimensioned with default values. You need to modify these values to the given values.

1. Select all dimensions by specifying a window around them.

Evaluation Copy. Do not reproduce. For information visit www.cadcim.com



Note

You can also use CTRL+ALT+A to select the entire sketch with dimensions.

2. When all dimensions turn green in color, choose the **Modify** tool from the **Editing** group; the **Modify Dimensions** dialog box is displayed.

   All dimensions in the sketch are displayed in this dialog box. Each dimension has a separate thumbwheel and an edit box. You can use the thumbwheel or the edit box to modify the dimensions. It is recommended that you use the edit boxes to modify the dimensions, if the change in the dimension value is large.

3. Clear the **Regenerate** check box and then modify the values of the dimensions.

   Once you clear this check box, any modification in a dimension value is not updated in the sketch. It is recommended that you clear the **Regenerate** check box when more than one dimension has to be modified.

   Notice that the dimensions that you select in the **Modify Dimensions** dialog box get enclosed in a blue box in the drawing area.

4. Modify all dimensions according to the dimensions shown in Figure 2-22. After modifying the dimensions, choose the **OK** button from the **Modify Dimensions** dialog box; the message **Dimension modifications successfully completed** is displayed in the message area.



Tip

You can modify the location of the dimensions as they appear on the screen by selecting and dragging them to a new location.

The completed sketch is shown in Figure 2-29.

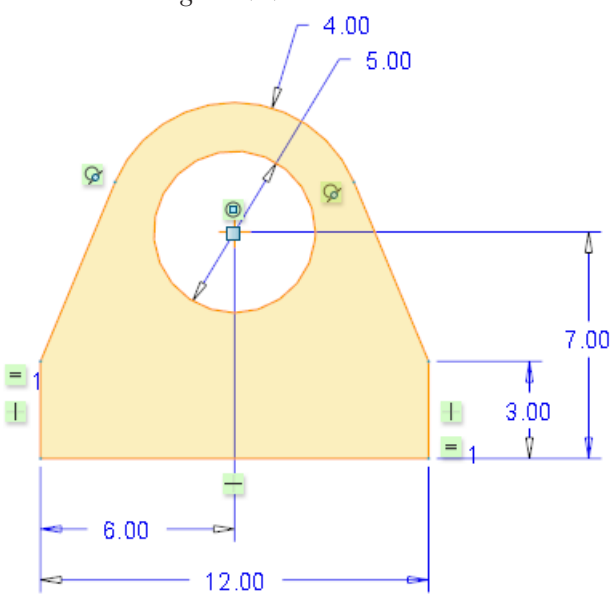

Figure 2-29 *The complete sketch with dimensions and constraints*

Evaluation Copy. Do not reproduce. For information visit www.cadcim.com

Saving the Sketch

Now, the sketch needs to be saved because you may need the sketch later in the **Part** mode to create a 3D model.

1. Choose the **Save** button from the **Quick Access** toolbar; the **Save Object** dialog box is displayed with the name of the sketch that you had entered earlier.

2. Choose the **OK** button; the sketch is saved.

3. After saving the sketch, choose the **Close** button from the **Quick Access** toolbar.

Tutorial 2

In this tutorial, you will draw the sketch for the model shown in Figure 2-30. The sketch of the model is shown in Figure 2-31. For your reference, all entities in the sketch are labeled alphabetically. **(Expected time: 30 min)**

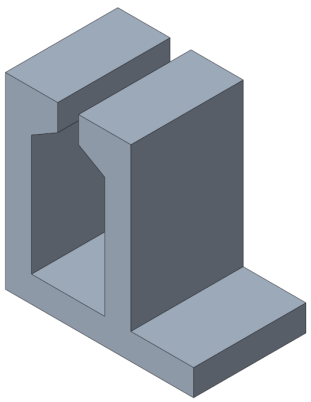

Figure 2-30 *Model for Tutorial 2*

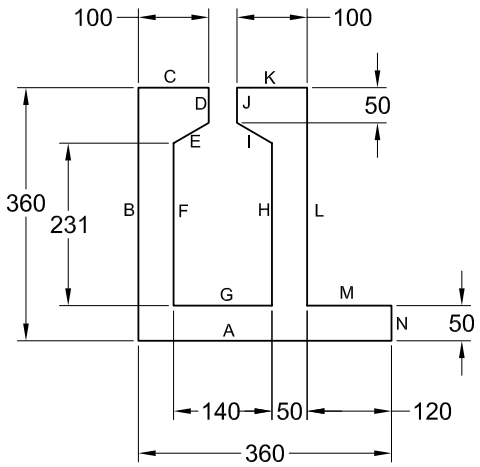

Figure 2-31 *Sketch of the model*

The following steps are required to complete this tutorial:

a. Set the working directory and create a new sketch file.
b. Draw the sketch by using the **Line Chain** tool, refer to Figure 2-32.
c. Dimension the required entities and then modify the dimensions of the sketch, refer to Figures 2-33 and 2-34.
d. Save the sketch and close the file.

Setting the Working Directory

The working directory was selected in Tutorial 1, therefore you need not to select the directory again. But, if a new session of Creo Parametric is started, you need to set the working directory again by following the steps given next.

Evaluation Copy. Do not reproduce. For information visit www.cadcim.com

1. Open the Navigator (if it is in collapsed state) by clicking on the **Show Navigator** button on the bottom left corner of the Creo Parametric main window; the Navigator slides out. At the bottom of the Navigator, the **Folder Tree** is displayed in the **Folder Browser** tab. Click on the **Folder Tree**; the **Folder Tree** expands.

2. Click on the arrow adjacent to the *Creo-5.0* folder in the Navigator; the contents of the *Creo-5.0* folder are displayed.

3. Now, right-click on the *c02* folder to display a shortcut menu. From the shortcut menu, choose the **Set Working Directory** option; the working directory is set to *c02*.

4. Close the Navigator by clicking on the **Navigator** button located at the bottom left corner of the main window; the Navigator slides in.

Starting a New Object File

1. Choose the **New** button from the **Data** group; the **New** dialog box is displayed. Select the **Sketch** radio button from the **Type** area of the **New** dialog box; the default name of the sketch appears in the **Name** edit box.



2. Enter **c02tut02** in the **Name** edit box and choose the **OK** button; you are in the sketcher environment of the **Sketch** mode.

Drawing the Sketch

The sketch in Figure 2-31 consists of only lines. For ease of understanding, all lines in the sketch are labeled alphabetically.

1. Choose the **Line Chain** tool from the **Line** drop-down of the **Sketching** group. Select a point close to the lower right corner of the drawing area by clicking and start drawing the horizontal line A. You will notice that as you draw line A, the — symbol is displayed on the line. This indicates that the line is horizontally constrained. Move the cursor toward left and specify the endpoint of the line.



2. Move the cursor vertically upward so that the | constraint appears on the line. When you get the appropriate size of the line, click to specify the endpoint of line B; line B is completed.

3. Move the cursor to the right in the drawing area and click to specify the endpoint of line C.

4. Now, to draw line D, move the cursor down and click to specify the endpoint of line D.

5. Move the cursor to size the line and click to specify the endpoint of the inclined line E.

6. The next line you need to draw is line F. Move the cursor vertically downward and click to specify the endpoint of line F.

7. Now, to draw line G, move the cursor horizontally toward the right and click to specify the endpoint of line G.

Evaluation Copy. Do not reproduce. For information visit www.cadcim.com

8. Move the cursor vertically upward and click to specify the endpoint of line H.

9. Now, continue drawing the remaining lines that are shown in Figure 2-30. When the sketch is complete, end the line creation by pressing the middle mouse button twice. Notice that the sketched entities are dimensioned automatically as you draw them. These dimensions are weak dimensions and appear in light blue color.

Applying Constraints to the Sketch

Constraints are applied to the sketch to maintain the design intent of the feature and this might sometimes result in less dimensions in the sketch.

1. Choose the **Equal** tool from the **Constrain** group and select lines F and H. The equal length constraint **1** is applied to both the lines. The constraint labels such as 1 or 2 vary from sketch to sketch.

2. Now, select lines J and N; the equal length constraint is applied to both the lines. Press the middle button to make other selections.

3. Select lines C and K; the equal length constraint is applied to both the lines. Press the middle mouse button to make other selections.

4. Select lines A and B; the equal length constraint is applied to both the lines. Press the middle mouse button twice to exit.

5. Choose the **Horizontal** tool from the **Constrain** group; you are prompted to select a line or two vertices.

6. Select the vertex that is joining the lines L and M. Now, select the vertex that is joining the lines G and H. For the placement of lines, refer to Figure 2-31. Both the vertices are aligned horizontally, as shown in Figure 2-32.

7. Select the vertex that is joining lines C and D and the vertex that is joining lines J and K, refer to Figure 2-30. Both the vertices are aligned horizontally, refer to Figure 2-32.

Evaluation Copy. Do not reproduce. For information visit www.cadcim.com

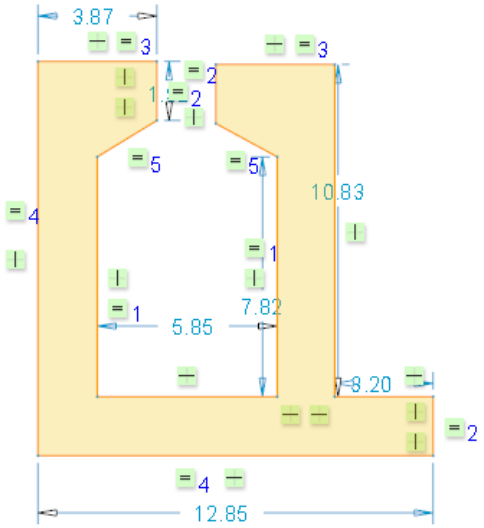

Figure 2-32 *Vertices aligned horizontally*

Dimensioning the Sketch

Weak dimensions have already been applied to the sketch while drawing. In this sketch, you need to dimension only the angle between lines D and E and lines J and I.

1. Choose the **Dimension** tool from the **Dimension** group.



2. Select lines D and E by using the left mouse button; the selected lines turn green in color. Now, press the middle mouse button to place the dimension close to the vertex where lines D and E join.

3. Similarly, dimension the angle between lines J and I.

Figure 2-33 shows the sketch after applying dimensions. If your sketch does not have all dimensions shown in this figure, apply them by using the **Dimension** tool.

Evaluation Copy. Do not reproduce. For information visit www.cadcim.com

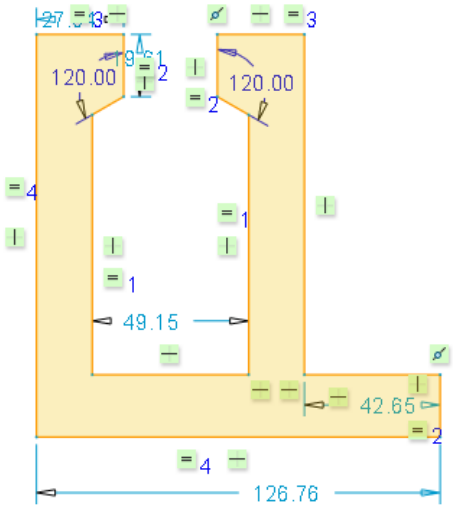

Figure 2-33 *Sketch after applying dimensions*

Modifying the Dimensions

The dimensions that are applied to the sketch need modification in dimension values.

1. Select all dimensions by specifying a window around them.

2. When dimensions turn green in color, choose the **Modify** tool; the **Modify Dimensions** dialog box is displayed.

3. Clear the **Regenerate** check box and then modify the values of the dimensions. On clearing this check box, the sketch is not regenerated while you modify the dimensions.

   Notice that the dimension that you select in the **Modify Dimensions** dialog box is enclosed in a blue box in the drawing area.

4. When all dimensions are modified, choose the **Done** button from the **Modify Dimensions** dialog box; the message **Dimension modifications successfully completed** is displayed in the message area. The completed sketch is shown in Figure 2-34.

Evaluation Copy. Do not reproduce. For information visit www.cadcim.com

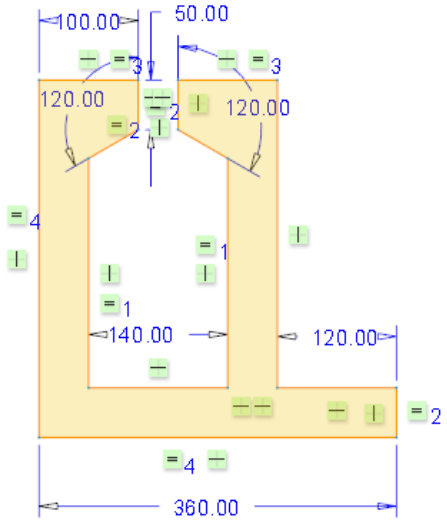

Figure 2-34 *Complete sketch with dimensions and constraints*

5. Save the sketch as discussed earlier. Next, choose the **Close** button from the **File** menu to exit the **Sketch** mode.

Note

You can also modify dimensions individually. However, individual modification of dimensions is recommended only when there is a minor change in the dimension value or when only one dimension is required to be modified.

Tutorial 3

In this tutorial, you will draw the sketch of the model shown in Figure 2-35. The sketch of the model is shown in Figure 2-36. For your reference, all entities in the sketch are labeled alphabetically. Also, you have to print the sketch. **(Expected time: 30 min)**

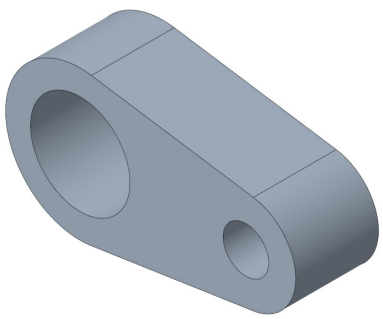

Figure 2-35 *Model for Tutorial 3*

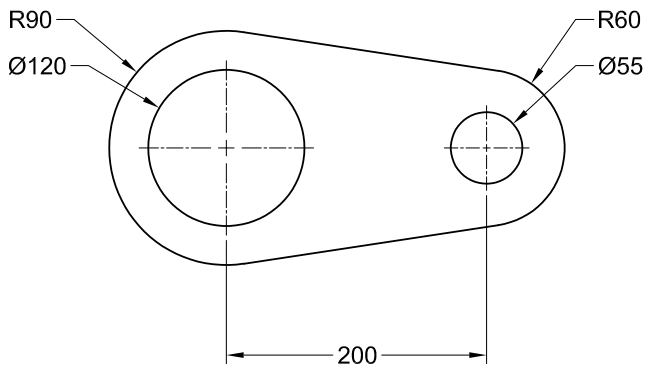

Figure 2-36 *Sketch of the model*

Evaluation Copy. Do not reproduce. For information visit www.cadcim.com

The following steps are required to complete this tutorial:

a. Set the working directory and create a new sketch file.
b. Draw the sketch by using the sketcher tools, refer to Figures 2-37 through 2-40.
c. Dimension the sketch and then modify the dimensions of the sketch, refer to Figure 2-41.
d. Save the sketch and print it.

Setting the Working Directory

The working directory was selected in Tutorial 1, therefore, you do not need to select the working directory again. But if a new session of Creo Parametric is started, then you have to set the working directory again by following the steps given next.

1. Open the Navigator by sliding it out. In the Navigator, the **Folder Tree** is displayed at the bottom. Click on the black arrow available on the right of the **Folder Tree**; the **Folder Tree** expands. Click on the arrow adjacent to the *Creo-5.0* folder in the Navigator; the contents of the *Creo-5.0* folder are displayed.

2. Now, right-click on the *c02* folder to display a shortcut menu. From the shortcut menu, choose the **Set Working Directory** option; the working directory is set to *c02*. Close the Navigator.

Starting a New Object File

1. Choose the **New** button from the **Data** group; the **New** dialog box is displayed. Select the **Sketch** radio button from the **Type** area of the **New** dialog box; the default name of the sketch appears in the **Name** edit box.



2. Enter **c02tut03** in the **Name** edit box. Choose the **OK** button to enter the sketcher environment of the **Sketch** mode.

Drawing the Circles

1. Choose the **Center and Point** tool from the **Circle** drop-down in the **Sketching** group and specify the center of the circle.



2. Move the cursor to size the circle and then click to complete the circle.

3. Draw another circle whose center is collinear with the center of the previous circle.

Figure 2-37 shows the two collinear circles drawn by using the **Center and Point** tool.

Drawing the Tangent Lines

1. Choose the **Line Tangent** tool from the **Line** drop-down in the **Sketching** group; you are prompted to select the start location on the arc or the circle.



2. Select the left circle at the top; a rubber-band line appears whose one end is attached to the circle and the other end is attached to the cursor.

3. Click on the top of the right circle; a tangent connecting the two circles is drawn.

Evaluation Copy. Do not reproduce. For information visit www.cadcim.com

4. Similarly, draw a tangent by selecting the two circles at the bottom.

Figure 2-38 shows the sketch after drawing the tangent lines.

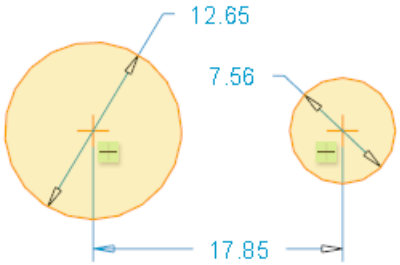

Figure 2-37 *Two collinear circles drawn using the* ***Centre and Point*** *tool*

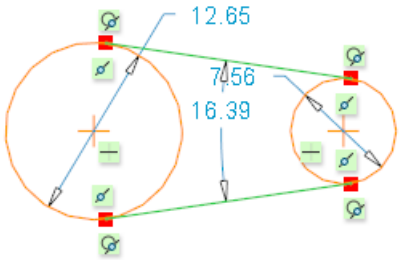

Figure 2-38 *Circles joined by tangent lines*

Trimming the Circles

As evident from Figure 2-37, the tangents that are drawn intersect the circles at the point where they meet the circle. Therefore, the part of the circle that is not required can be dynamically trimmed.

1. Choose the **Delete Segment** tool from the **Editing** group.

2. Select the two circles individually to trim them at the locations shown in Figure 2-39.

Figure 2-40 shows the two circles after deleting the unwanted portions of the circle.

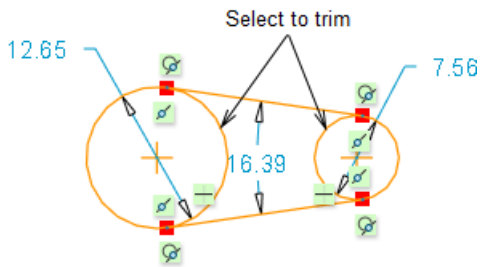

Figure 2-39 *Locations to trim*

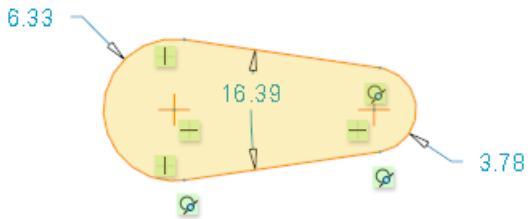

Figure 2-40 *Sketch after trimming*

Drawing the Circles

1. Choose the down arrow on the right of the **Center and Point** tool to display the flyout. Choose the **Concentric** tool from the flyout; you are prompted to select an arc.

2. Select the left arc and create a circle concentric to the arc. Similarly, select the right arc to create a concentric circle (refer to Figure 2-36).

Notice that the radius dimension is applied to the two arcs, whereas the diameter dimension is applied to the circles. It is so because the arcs are applied with radius dimension and circles are applied with diameter dimension by default.

Evaluation Copy. Do not reproduce. For information visit www.cadcim.com

Dimensioning the Sketch

In order to fully define a sketch, you need to dimension it.

1. Choose the **Dimension** tool.



2. Select the centers of the two circles and place the dimension at the bottom of the sketch.

Modifying the Dimensions

1. Select all dimensions by defining a window.



Note

You can also use CTRL+ALT+A from the keyboard to select all entities and items in the sketch.

2. When all dimensions turn green in color, choose the **Modify** tool; the **Modify Dimensions** dialog box is displayed.



3. Clear the **Regenerate** check box and then modify the values of the dimensions. You will notice that the dimension that you edit in the **Modify Dimensions** dialog box is enclosed by a blue box in the drawing area.

4. When all dimensions are modified, choose the **OK** button from the **Modify Dimensions** dialog box; the message **Dimension modifications successfully completed** is displayed in the message area.

   The completed sketch is shown in Figure 2-41.

5. Save the sketch as discussed earlier. Next, you need to print the sketch.

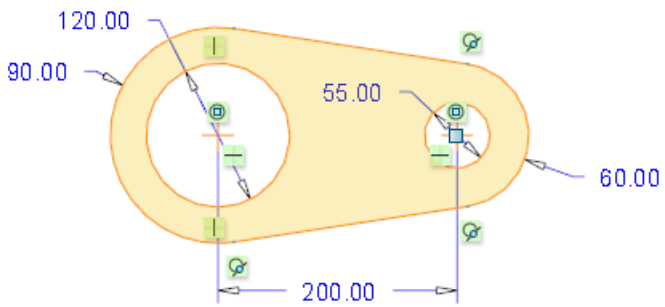

Figure 2-41 *Complete sketch with dimensions and constraints*

Printing the Sketch Using the Plot Option

1. Choose the **Print** option from the **File** menu or press CTRL+P; the **Printer Configuration** dialog box is displayed, as shown in Figure 2-42.



2. Choose the **Commands and Settings** button from this dialog box; a shortcut menu is displayed, as shown in Figure 2-43.



Evaluation Copy. Do not reproduce. For information visit www.cadcim.com

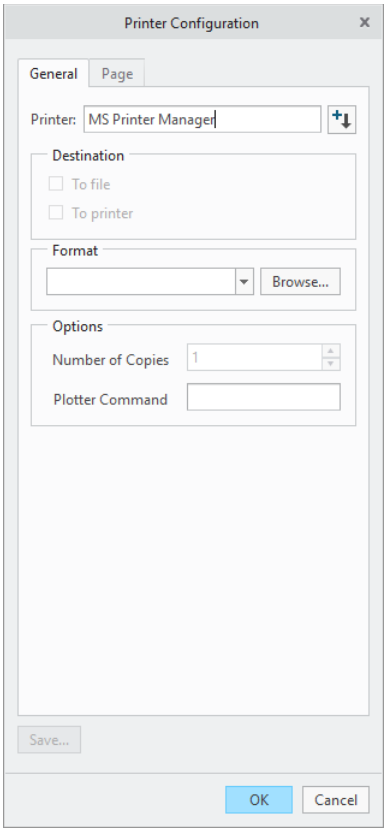

*Figure 2-42 The **Printer Configuration** dialog box*

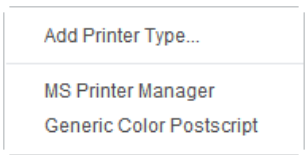

*Figure 2-43 **Commands and Settings** shortcut menu*

3. Choose the **Add Printer Type** option from the shortcut menu; the **Add Printer Type** dialog box is displayed.

4. From the printers listed in the **Add Printer Type** dialog box, select the printer that is installed on your system and choose the **OK** button.

5. From the **Printer Configuration** dialog box, choose the **Page** tab and select the **A** option from the **Size** drop-down list, if not already selected; the dimensions of the sheet are set, by default.

6. Also, select the desired image resolution and the image depth from the dialog box under the **Resolution** area of the **Printer Configuration** dialog box.

7. Next, choose the **OK** button from the **Printer Configuration** dialog box to complete the printing.

Evaluation Copy. Do not reproduce. For information visit www.cadcim.com

Self-Evaluation Test

Answer the following questions and then compare them to those given at the end of this chapter:

1. The **Modify** tool is located in the_____ group of the **Ribbon**.
2. A sketch can be modified by changing its _____.
3. There are two types of constraints in Creo Parametric: _____ and _____.
4. In the **Sketch** mode, a weak dimension is highlighted by _____ color.
5. The file created in the **Sketch** mode is saved with a _____ file extension.
6. When you draw a sketch, the dimensions and constraints are automatically applied to it. (T/F)
7. In Creo Parametric, you can create lines that are tangent to two circles. (T/F)
8. You can convert a solid geometry into a construction geometry. (T/F)
9. You can convert a weak dimension into strong dimension by using the mini popup toolbar that is displayed when you click on the dimension. (T/F)
10. For drawing a circle, first you need to specify its diameter. (T/F)

Review Questions

Answer the following questions:

1. The tools available in the _____ group are used to apply constraints manually.
2. You can dynamically modify the geometry of a sketch. (T/F)
3. You can use the **Rectangle** tool from the **Sketching** group to draw a square. (T/F)
4. You cannot undo a previous operation in the sketcher environment. (T/F)
5. You can use the options in the shortcut menu to draw a sketch, when no other tool is chosen. (T/F)
6. You cannot disable constraints in the **Sketch** mode. (T/F)
7. Construction points are used to specify locations in sketch. (T/F)
8. Two types of lines can be sketched by using the tools available in the **Sketching** group. (T/F)

Evaluation Copy. Do not reproduce. For information visit www.cadcim.com

9. The **Dimension** tool is used for normal dimensioning of the sketch. (T/F)

10. You can select one or more dimensions from the sketch to modify them. (T/F)

EXERCISES

Exercise 1

In this exercise, you will draw the sketch of the model shown in Figure 2-44. The dimensions of the model are shown in Figure 2-45. **(Expected time: 30 min)**

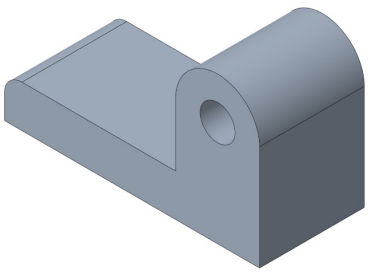

Figure 2-44 *Solid model for Exercise 1*

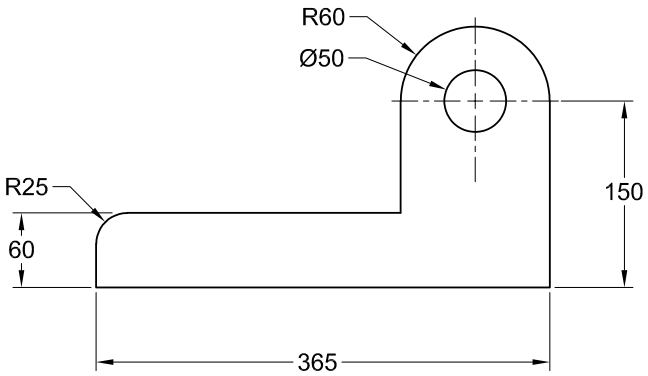

Figure 2-45 *Dimensions of the model*

Exercise 2

In this exercise, you will draw the sketch of the model shown in Figure 2-46. The dimensions of the model are shown in Figure 2-47. **(Expected time: 30 min)**

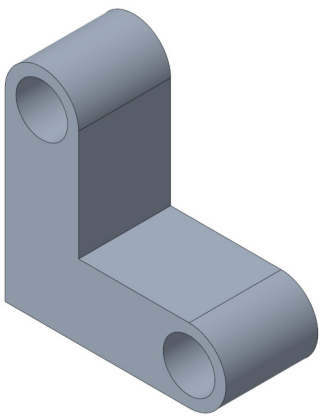

Figure 2-46 *Solid model for Exercise 2*

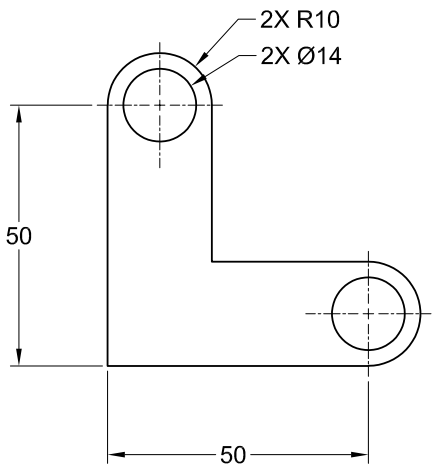

Figure 2-47 *Dimensions of the model*

Evaluation Copy. Do not reproduce. For information visit www.cadcim.com

Exercise 3

In this exercise, you will draw the sketch of the model shown in Figure 2-48. The dimensions of the model are shown in Figure 2-49. **(Expected time: 30 min)**

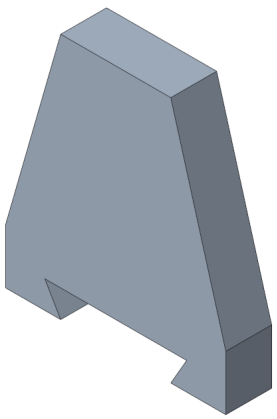

Figure 2-48 *Solid model for Exercise 3*

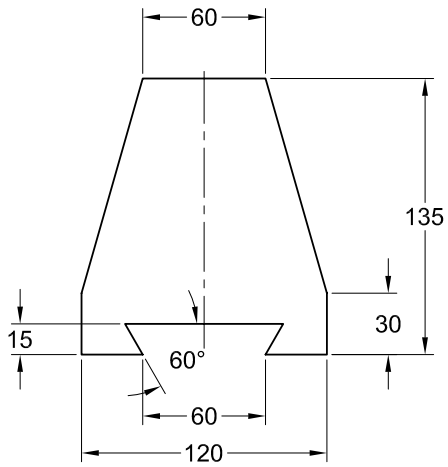

Figure 2-49 *Dimensions of the model*

Exercise 4

In this exercise, you will draw the sketch of the model shown in Figure 2-50. The dimensions of the model are shown in Figure 2-51. **(Expected time: 30 min)**

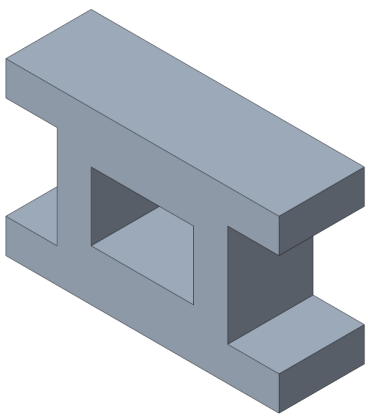

Figure 2-50 *Solid model for Exercise 4*

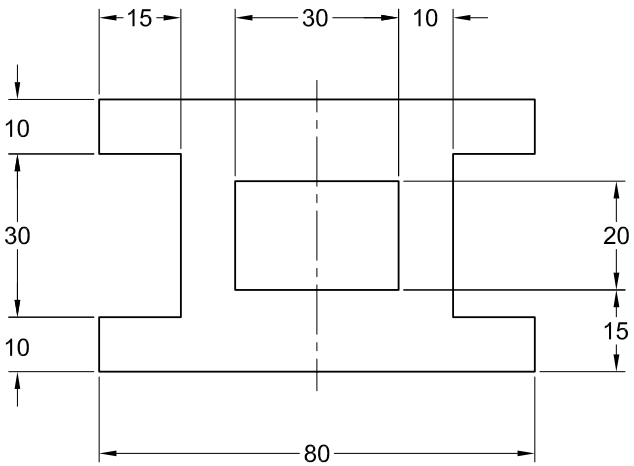

Figure 2-51 *Dimensions of the model*

Evaluation Copy. Do not reproduce. For information visit www.cadcim.com

Exercise 5

In this exercise, you will draw the sketch of the model shown in Figure 2-52. The dimensions of the model are shown in Figure 2-53. **(Expected time: 30 min)**

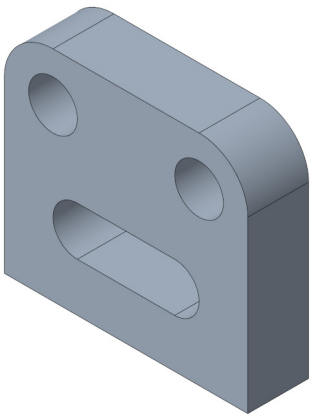

Figure 2-52 *Solid model for Exercise 5*

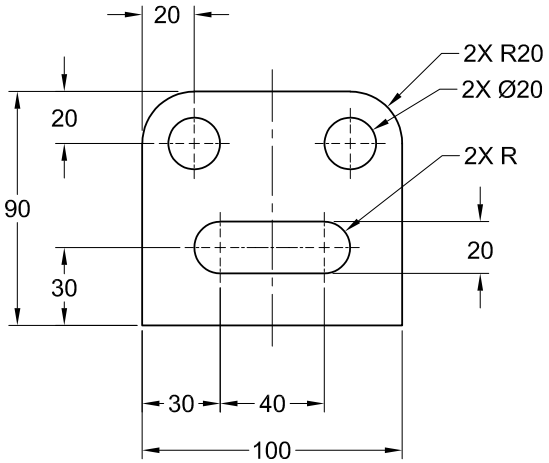

Figure 2-53 *Dimensions of the model*

Exercise 6

In this exercise, you will draw the sketch of the model shown in Figure 2-54. The dimensions of the model are shown in Figure 2-55. **(Expected time: 30 min)**

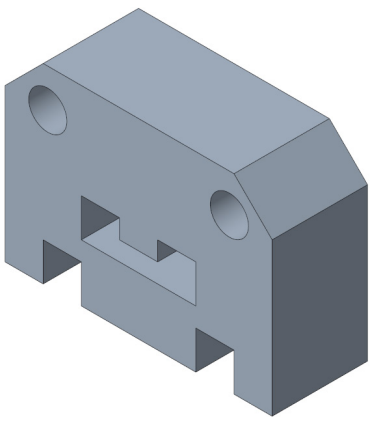

Figure 2-54 *Solid model for Exercise 6*

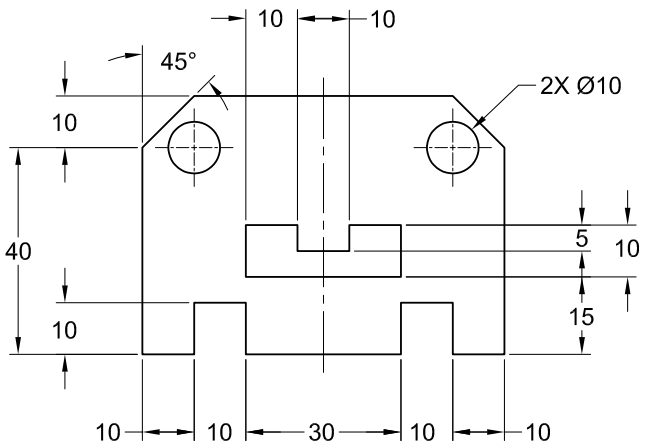

Figure 2-55 *Dimensions of the model*

Answers to Self-Evaluation Test

1. Editing, **2.** dimensions, **3. Geometry**, **Assembly**, **4.** light blue, **5.** *.sec,* **6.** T, **7.** T, **8.** T, **9.** T, **10.** F

Evaluation Copy. Do not reproduce. For information visit www.cadcim.com