Chapter 2

Defining Material Properties

Learning Objectives

After completing this chapter, you will be able to:

- *Apply different materials to models*
- *Understand mandatory and optional properties for the selected study*
- *Create custom materials*
- *Apply and save custom materials*

Evaluation Copy. Do not reproduce. For information visit www.cadcim.com

INTRODUCTION

Generally, the industrial components are made-up of metals. This is the reason most of the FEA calculations involve metallic components. The analysis of metallic components can be carried out by either linear or nonlinear stress analysis. The analysis approach to be used depends upon the design and applications of the load.

If the geometry returns to its original shape and remains in the linear elastic range once the load is removed, then linear stress analysis may be applied to the geometry. In this case, rotations and displacements are relative supports to the geometry. For such analysis, Factor of Safety (FoS) is a common design goal to validate the design.

If you want to evaluate the effects of post-yield load cycling on the geometry, a nonlinear stress analysis should be carried out. In this case, the impact of strain hardening on the residual stresses and permanent deformation are important analysis interest. The analysis of nonmetallic components, such as plastic or rubber components, should be carried out using nonlinear stress analysis methods, due to their complex load deformation relationship.

Most Finite Element Analysis (FEA) programs use energy methods to find a numerical solution. In these methods, first the displacement is calculated for the load applied. The displacement can then be used to calculate strain, and then the strain can be found out by using the Young's modulus (E= Stress/Strain). Displacement is the primary result for FEA study. Note that the stress is not a function of material properties unless the stresses are located close to the constraints or the model is indeterminate. Otherwise, the stress should be the same or maybe slightly different due to stiffness (k numerical error).

To define the material of an FEA model is one of the most important steps in the analysis process. Based on the analysis type chosen, you must define all the necessary material properties. For example, the modulus of elasticity is required for static, frequency, and buckling studies, while thermal conductivity is needed for thermal studies. SOLIDWORKS Simulation is provided with almost all the standard materials that are available in SOLIDWORKS Material library. You can also create and edit custom materials or libraries in SOLIDWORKS Simulation and then apply them any time before running the analysis. Note that the material applied to the CAD model using Simulation does not update the material assigned to the CAD model before importing.

APPLYING A MATERIAL

In SOLIDWORKS, you can apply material to a part, parts of an assembly, or multi body part. When you apply a material to a part, all physical properties of the applied material will be assigned to the part. To apply a material to a model (part or assembly), right-click on the **Part(s)** node and then choose the **Apply Material to All** option from the shortcut menu displayed, as shown in Figure 2-1; the **Material** dialog box will be displayed, refer to Figure 2-2. Select the desired material from the SOLIDWORKS Materials library. For example, here Alloy Steel has been selected in the library and the property of the selected material is displayed in the **Material** dialog

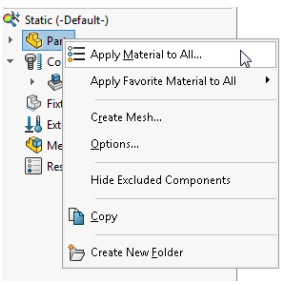

Figure 2-1 *Selecting the* ***Apply Material to All*** *option*

box, as shown in Figure 2-2. You will notice that the material properties will be displayed in red, blue, and black colors. These colors describe the mandatory and optional properties for the selected study. Red color (Elastic Modulus, Poisson's Ratio, Mass Density, Yield Strength) indicates that the property is mandatory based on the active study type and the material model. Blue color (Tensile Strength, Compressive Strength, Thermal Expansion Coefficient) indicates an optional property. Black color (Shear Modulus, Thermal Conductivity, Specific Heat, Material Damping Ratio) indicates the properties not applicable to the current study. Next, choose the **Apply** button and then choose **Close** from the **Material** dialog box; the selected material will be applied to all components of the model.

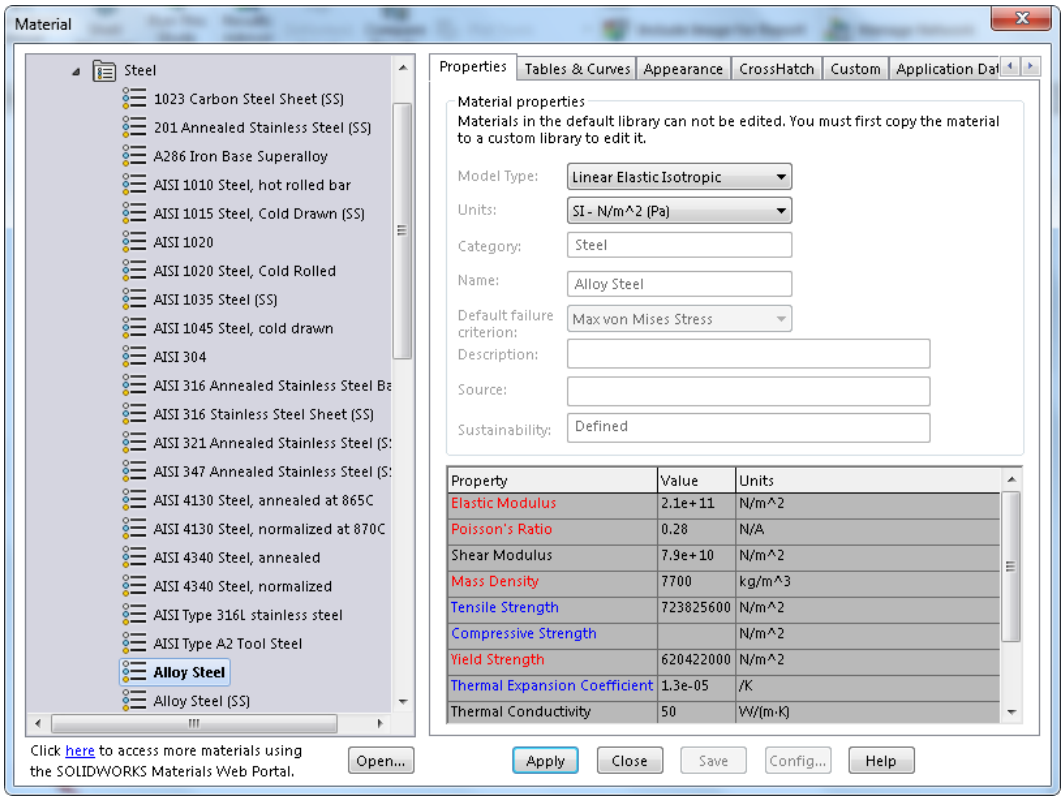

Figure 2-2 *The* ***Material*** *dialog box*



Note

1. When you are applying material to a part, you will get the ***Apply/Edit Material*** *option in the shortcut menu in place of the* ***Apply Material to All*** *option.*

2. Material applied in simulation can not be removed but can be changed by applying another material.

3. The material properties in the SOLIDWORKS Materials library are read-only. These properties can not be edited.

The left side of the dialog box contains a tree of available material types and materials. The right side area contains different tabs which display information about the selected material. These tabs are discussed next.

Evaluation Copy. Do not reproduce. For information visit www.cadcim.com

Properties Tab

The options in the **Properties** tab are used to display all properties of the material in SOLIDWORKS Library. When you create custom material using this property tab then you can assign properties to the custom material. Various options under this tab are discussed next.

Model Type

This drop-down list is used to define the material type for the study. The available list of material types depends upon the active study type.

Units

This drop-down list is used to specify a unit for material properties.

Include creep effect

This check box will be available for nonlinear studies and is used to activate the creep effect for the selected material. This option will not be available for linear elastic orthotropic and viscoelastic material.

Number of constants

This drop-down list will be available only for hyperelastic materials in nonlinear studies. The options of this drop-down list are used to define the hyperelastic constant. You can enter the material constants manually, or let the program calculate them from test data.

Use Curve Data to Compute Material Constants

This check box will be available only for hyperelastic and viscoelastic material models in nonlinear studies. Select this check box to let the program calculate the material constants from available test data. You can enter up to three data curves for simple tension, planar tension or pure shear, and biaxial tension.

Reference Geometry

This selection box will be available only for the linear elastic orthotropic material model and is used to define reference geometry for the directions of the orthotropic material properties. The reference geometry can be a plane, an axis, or a coordinate system.

Create Stress-Strain Curve

This button will be available only for nonlinear elastic, plasticity - von Mises, and plasticity - Tresca material models. When you choose this button, the **Table and Curves** tab of the **Material** dialog box gets activated where you can define stress-strain curve.

Category

This edit box displays the name of the category into which the material is organized and will be activated in case of custom materials. So, you can change the category name by entering new name in this edit box.

Name

This edit box displays the name of the selected material. This edit box works similar to the **Category** edit box.

Evaluation Copy. Do not reproduce. For information visit www.cadcim.com

Default Failure Criterion
This drop-down list is used to specify the failure criterion to be used for computing the factor of safety when the **Automatic** option is selected from the **Criterion** drop-down list in the **Factor of Safety PropertyManager**.

Description
This edit box is used to add a comment about the material.

Source
This edit box is used to specify a source of reference for custom defined materials.

Sustainability
This display box indicates whether the material has defined sustainability. For SOLIDWORKS materials it displays, **Defined** or **Undefined**. But in case of custom materials, the **Undefined** option is displayed. Also the **Select** button is displayed on the right of the display box. The **Select** button allows the user to specify a link to the material in the **SOLIDWORKS Material** library.

Properties Table
This table displays the properties of the selected material. In case of custom material, you can change these properties.

Tables & Curves Tab
This tab is used to define stress-strain curves and stretch ratio-stress curves for nonlinear material models. You can also define temperature-dependent material properties for linear material models. The options under this tab are discussed next.

Type
The **Type** drop-down list in the **Type** area is used to list material properties that are allowed to be temperature-dependent.

Table data
The options in this area are used to set the unit for temperature curve and the curve data.

Preview
This area displays the graph as you enter curve data points.

File
This button is used to import the curve data from a curve data points file (*.dat).

View
This button is used to display graph for material property variation with respect to temperature.

Save
This button is used to save the custom material to the selected material library file.

Evaluation Copy. Do not reproduce. For information visit www.cadcim.com

Appearance Tab

This tab is used to assign new texture or color to the selected material. This does not change the physical properties of the material. Note that the appearance of standard SOLIDWORKS materials can not be changed.

Cross Hatch Tab

Using the options of this tab, you can define cross-hatch of section view in the drawing document.

Custom Tab

The area under this tab will be available for editing when the selected material is in a custom library. This tab is used to add non-standard properties to a material.

Application Data Tab

The area under this tab will be available for editing when the selected material is in a custom library. This tab is used to record notes about the selected material, such as document processing, manufacturing, or test information.

Favorites Tab

This tab is used to manage the list of favorite materials displayed when you right-click on the part node available in Simulation Tree. You can assign a material to a part by selecting a material from the favorite materials list. The different options under this tab are discussed next.

Add

This button is used to add a new material to the favorite material list.

Remove

This button is used to remove a material from the favorite material list.

Up

This button is used to move the selected material one position up in the favorite material list.

Down

This button is used to move the selected material one position down in the favorite material list.

CREATING A CUSTOM MATERIAL

As discussed earlier, SOLIDWORKS comes with a material library which contains almost all standard materials. However, if the material you need is not available in the SOLIDWORKS material library then you can add additional materials to your custom library in SOLIDWORKS. To create a custom material, right-click on the **Part** node in the Simulation Tree and select the **Apply/Edit Material** from the shortcut menu, as shown in Figure 2-3; the **Material** dialog box will be displayed. Right-click on the **Custom Materials** library at the bottom of the list of material libraries; a shortcut menu will be displayed. Choose the **New Category** option from the shortcut menu, as shown in Figure 2-4; a new material category will be added to the **Custom Materials** library as **New Category**. Right-click on the **New Category**; a shortcut menu will be displayed. Choose the **New Material** from the shortcut menu, as shown in Figure 2-5.

Evaluation Copy. Do not reproduce. For information visit www.cadcim.com

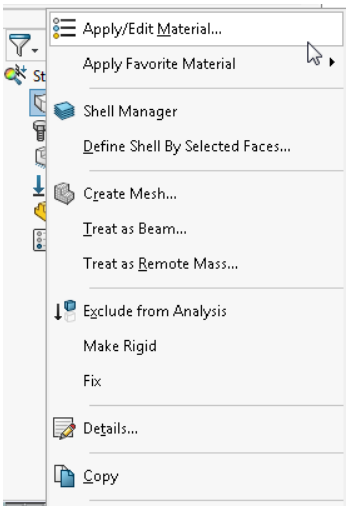

Figure 2-3 *Selecting the* ***Apply/Edit Material*** *option*

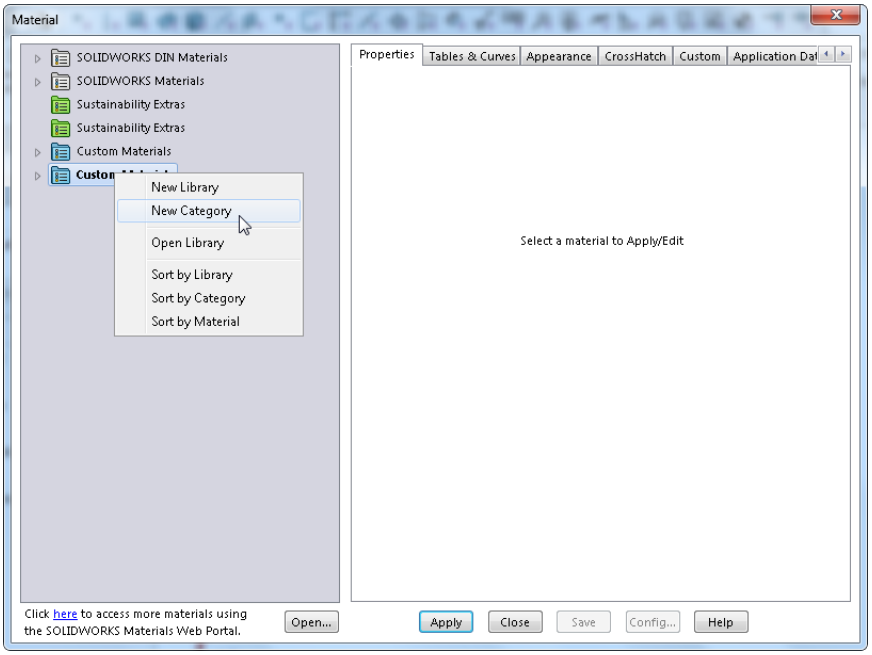

Figure 2-4 *The* ***New Category*** *option chosen in shortcut menu*

After choosing the **New Material** option from the shortcut menu, a custom material will be added with the name **Default** and the properties of this newly added material will be displayed in the **Properties** tab of the **Material** dialog box, as shown in Figure 2-6. These properties are editable and you need to change them as per your material properties.

Evaluation Copy. Do not reproduce. For information visit www.cadcim.com

Evaluation Copy. Do not reproduce. For information visit www.cadcim.com

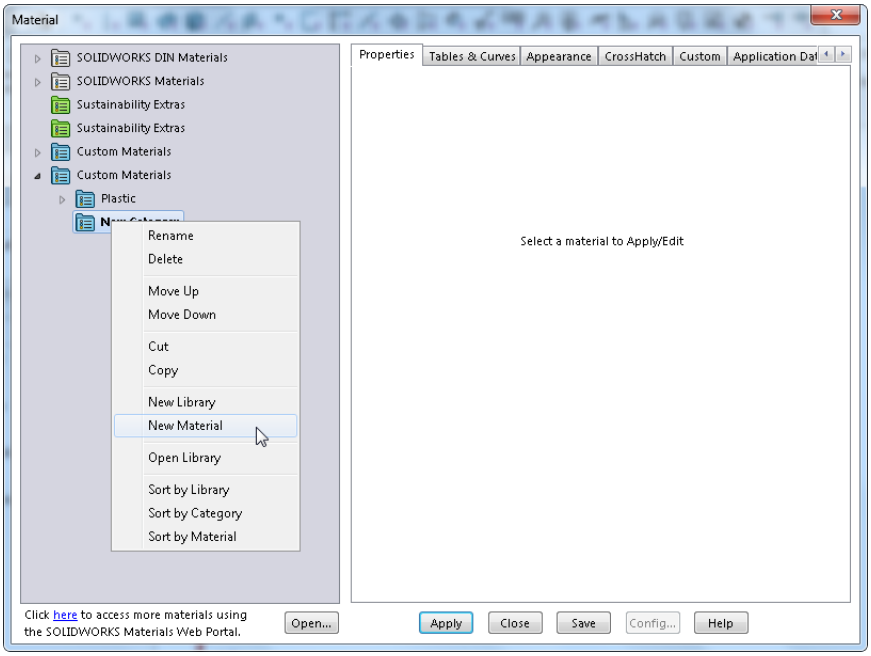

Figure 2-5 *The* ***New Material*** *option chosen in the shortcut menu*

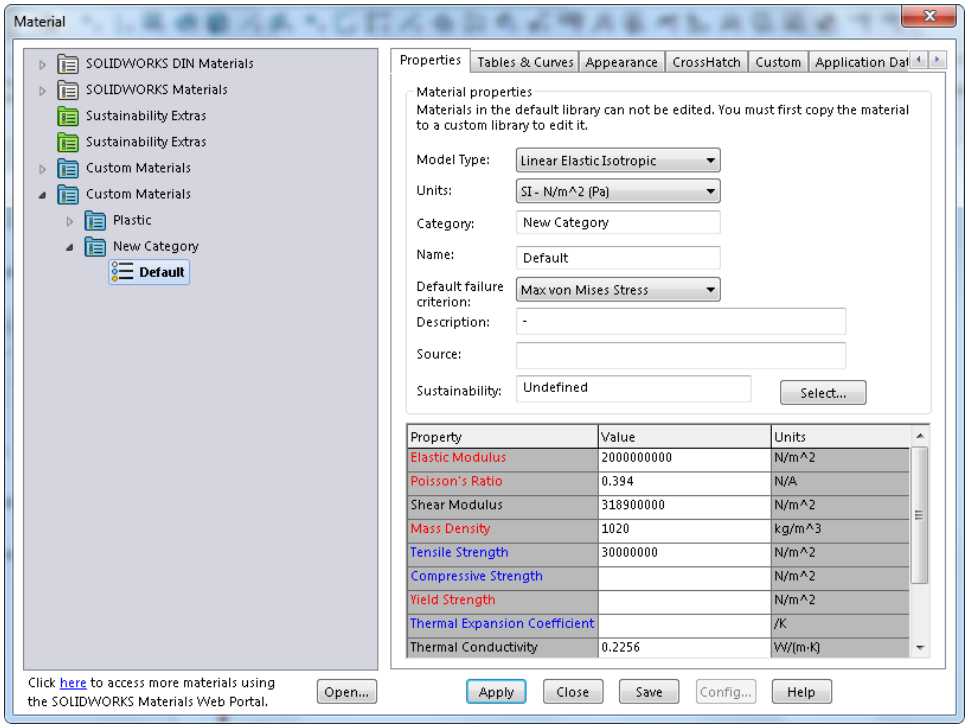

Figure 2-6 *The properties of the* ***Default*** *material in the* ***Material*** *dialog box*

You can also assign custom material appearance to the custom material by selecting it from one of the preset appearances available, as shown in Figure 2-7. Next, choose the **Apply** button from the **Material** dialog box; the custom material properties will be applied to the part and the custom material will be saved in SOLIDWORKS Material library.



Note

When you are adding custom material, default names get assigned to the material category and to the material. But, you need to rename them according to your custom material.

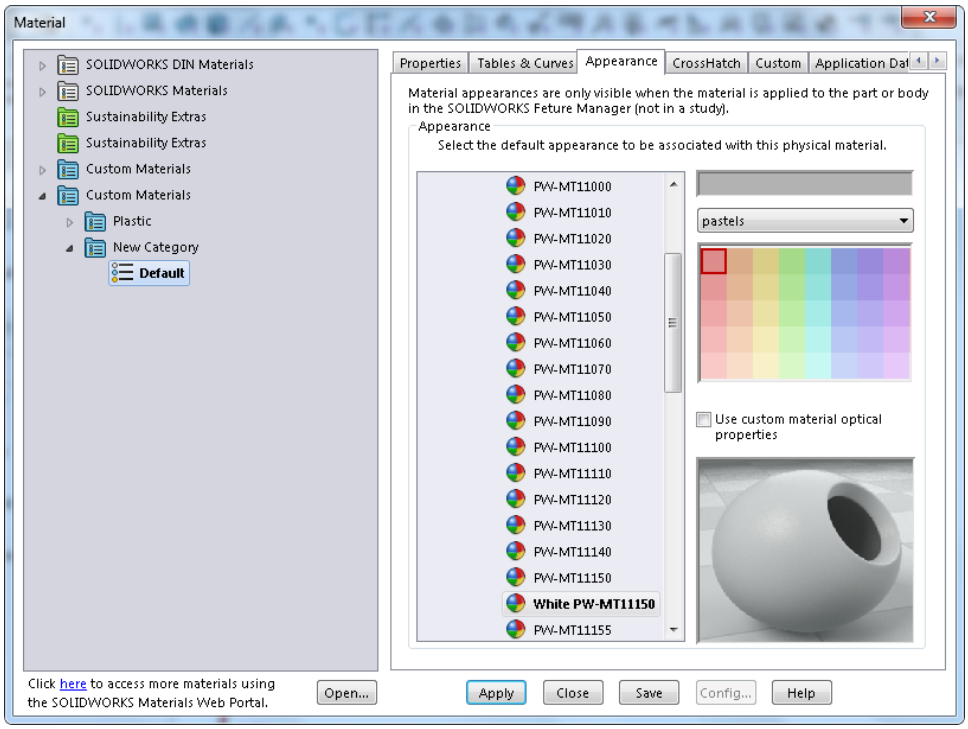

Figure 2-7 *Different preset appearances available in the* ***Appearance*** *tab*

TUTORIALS

To perform the tutorials, you need to download the input files from *www.cadcim.com*. The complete path for downloading the files is as follows:

Textbooks > CAE Simulation > SOLIDWORKS Simulation > SOLIDWORKS Simulation 2018: A Tutorial Approach > Input Files > c02_simulation_2018_input.zip

Extract the downloaded zipped file and save it.

Evaluation Copy. Do not reproduce. For information visit www.cadcim.com

Tutorial 1

In this tutorial, you will open *c02_tut01* file and assign Plain Carbon Steel from the SOLIDWORKS Material library to the model. Figure 2-8 shows the model for the tutorial. Next, start the linear static study and assign material from the SOLIDWORKS Material library to the model.

(Expected time: 30 min)

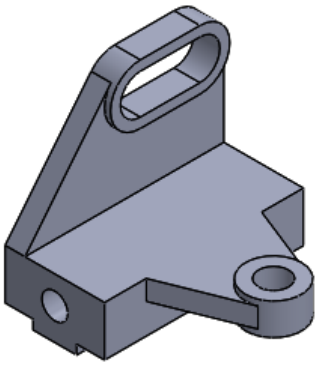

Figure 2-8 *Model for Tutorial 1*

The following steps are required to complete this tutorial:

a. Activate SOLIDWORKS Simulation environment.
b. Open the model.
c. Start static study.
d. Create a custom material as Steel.
e. Apply the material to the model.
f. Save the model.

Adding the SOLIDWORKS Simulation to SOLIDWORKS and Starting a New Part File

Now, you need to add the SOLIDWORKS Simulation to SOLIDWORKS to perform the analysis.

1. Start SOLIDWORKS and then choose **Tools > Add-Ins** from the SOLIDWORKS menus; the **Add-Ins** window is displayed. Next, select both check boxes on the left and right side of SOLIDWORKS Simulation and then choose the **OK** button.

2. Start a new part document by using the **New SOLIDWORKS Document** dialog box. Note that the Simulation menu is added to the **SOLIDWORKS** menus and the **Simulation** tab is added to the CommandManager.

Opening the Model

Start the SOLIDWORKS Simulation and open the model (*c02_tut01)*.

Evaluation Copy. Do not reproduce. For information visit www.cadcim.com

1. Start SOLIDWORKS and choose the **Open** button from the menu bar; the **Open** dialog box is displayed.

2. Browse to the folder where the model has been downloaded and then select the model.

3. Choose the **Open** button in the **Open** dialog box; the model is opened in SOLIDWORKS part mode.

Starting Linear Static Study

In this section, you will start linear static study.

1. Choose the **Simulation** tab in the **CommandManager** tab.

2. Choose the **New Study** tool from the **New Study** flyout in the **Simulation CommandManager**; the **Study PropertyManager** is displayed.

3. Choose the **Static** button from the **General Simulation** rollout and assign it the name as **Linear Static** in the **Study name** edit box of the **Name** rollout.

4. Choose the **OK** button from the **Study PropertyManager**; a static study is started and Simulation Tree is displayed.

Applying Material

In this section, you will apply material to the model from the SOLIDWORKS Materials library.

1. Right-click on the part node **(c02_tut01)** in the Simulation Manager tree and choose the **Apply/Edit Material** option from the shortcut menu; the **Material** dialog box is displayed.

2. Expand the **SOLIDWORKS Materials** node if not expended by default; different nodes with the name of material are displayed under the **SOLIDWORKS Materials** node.

3. Expand the **Steel** sub-node; a list of steel materials is displayed under the **Steel** sub-node.

4. Select the **Plain Carbon Steel** from the list of steel materials.

5. Choose the **Apply** button in the **Material** dialog box; the material is applied to the model.

6. Close the **Material** dialog box by choosing the **Close** button in the **Material** dialog box.

7. Choose the **Save** button; the model is saved.

Evaluation Copy. Do not reproduce. For information visit www.cadcim.com

Tutorial 2

In this tutorial, you will open the *c02_tut02* file that you have downloaded. Next, you will start the linear static study on the model and assign Steel material to it. The properties of the Steel material are given next. Figure 2-9 shows the model for the tutorial.

(Expected time: 30 min)



Figure 2-9 *Model for Tutorial 2*

Properties of Steel

Mass density:	8100 kg/m^3
Elastic modulus:	1.9e+011 N/m^2
Poisson's ratio:	0.27
Yield strength:	2.1e+008 N/m^2
Tensile strength:	3.6e+008 N/m^2

The following steps are required to complete this tutorial:

a. Activate SOLIDWORKS Simulation environment.
b. Open the model.
c. Start static study.
d. Create a custom material as Steel.
e. Apply the material to the model.
f. Save the model.

Adding the SOLIDWORKS Simulation to SOLIDWORKS and Starting a New Part File

Now, you need to add the SOLIDWORKS Simulation to SOLIDWORKS to perform the analysis.

1. Start SOLIDWORKS and then choose **Tools > Add-Ins** from the SOLIDWORKS menus; the **Add-Ins** window is displayed. Next, select both check boxes on the left and right side of SOLIDWORKS Simulation and then choose the **OK** button.

Evaluation Copy. Do not reproduce. For information visit www.cadcim.com

2. Start a new part document by using the **New SOLIDWORKS Document** dialog box. Note that the Simulation menu is added to the **SOLIDWORKS** menus and the **Simulation** tab is added to the CommandManager.

Starting SOLIDWORKS Simulation and Opening the Model

Open the model*(c02_tut02)* in SOLIDWORKS Simulation.

1. Start SOLIDWORKS, choose the **Open** button from the menu bar; the **Open** dialog box is displayed.

2. In this dialog box, browse to the folder where the downloaded model is saved and then select the model.

3. Choose the **Open** button in the **Open** dialog box; the model is opened in the part mode of SOLIDWORKS.

Starting Linear Static Study

In this section, you will start the linear static study before creating custom material.

1. Choose the **Simulation** tab in the CommandManager tab.

2. Choose the **New Study** tool from the **New Study** flyout; the **Study PropertyManager** is displayed.

3. Choose **Static** from the **General Simulation** rollout and assign **Linear Static** as the name of the study in the **Study name** edit box of the **Name** rollout.

4. Choose the **OK** button from the **Study PropertyManager**; the linear static study is started.

Creating a Custom Material

In this section, you will create custom steel material and apply that to the model.

1. Right-click on the part node **(c02_tut02)** in the Simulation Manager tree and choose the **Apply/Edit Material** option from the shortcut menu; the **Material** dialog box is displayed.

2. Right-click on the **Custom Materials** at the bottom of the list of material libraries; a shortcut menu is displayed.

3. Select the **New Category** option from the shortcut list; a folder with the name **New Category** is added to the **Custom Materials** library.

4. Right-click on the **New Category** folder and rename it as **Custom Steel**.

5. Right-click on the **Custom Steel** folder and choose the **New Material** option from the shortcut menu; a node is added under the **Custom Steel** folder with the name as **Default**.

6. Right-click on the **Default** node and rename it as **Steel**.

Evaluation Copy. Do not reproduce. For information visit www.cadcim.com

7. Choose the **Properties** tab in the **Material** dialog box if not chosen by default, and select the **SI - N/m² (Pa)** option from the **Units** drop-down list.

8. Delete all the properties data present in the **Value** column of the **Material** dialog box.

9. Enter **1.9e+011** in the **Value** column of the **Elastic Modulus** row.

10. Enter **0.27** in the **Value** column of the **Poisson's Ratio** row.

11. Enter **8100** in the **Value** column of the **Mass Density** row.

12. Enter **3.6e+008** in the **Value** column of the **Tensile Strength** row.

13. Enter **2.1e+008** in the **Value** column of the **Yield Strength** row.

14. Choose the **Apply** button in the **Material** dialog box and close the dialog box; the custom steel material is applied to the model and also saved in the SOLIDWRKS Material libraries for further use.

15. Choose the **Save** button; the material is saved.

Tutorial 3

In this tutorial, you will open the *c02_tut03* file in SOLIDWORKS. Next, you will start linear static study and apply different materials to different components of the Anti Vibration Mount assembly. The Bolt and Nut are made of Grey Cast Iron, the Yoke Plate and Body are made up of Mild Steel and the Bush is made up of Natural Rubber. The properties of Mild Steel and Gray Cast Iron are given next. Figure 2-10 shows the model (Anti Vibration Mount assembly) for the tutorial and Figure 2-11 shows various components of the Anti Vibration Mount assembly.

(Expected time: 30 min)

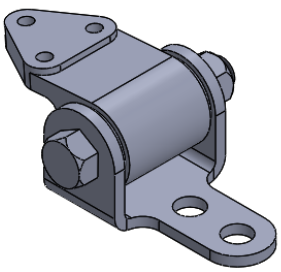

Figure 2-10 *Anti Vibration Mount assembly*

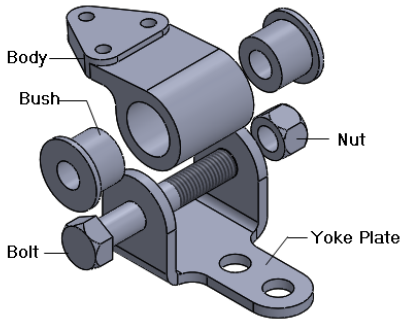

Figure 2-11 *Various components of the Anti Vibration Mount assembly*

Properties of Mild Steel:

Mass density:	7850 kg/m³
Elastic modulus:	1.9e+011 N/m²
Poisson's ratio:	0.27

Evaluation Copy. Do not reproduce. For information visit www.cadcim.com

Yield strength:	2.3e+008 N/m²
Tensile strength:	3.99e+008 N/m²

Properties of Gray Cast Iron:

Mass density:	7300 kg/m³
Elastic modulus:	1.9e+011 N/m²
Poisson's ratio:	0.26
Yield strength:	2.41e+008 N/m²
Tensile strength:	4.48e+008 N/m²

The following steps are required to complete this tutorial:

a. Start SOLIDWORKS Simulation.
b. Start a static study.
c. Create a custom material as Gray Cast Iron and apply it on Bolt and Nut.
d. Create another custom material as Mild Steel and apply it on Yoke Plate and Body.
e. Apply Natural Rubber material on bush.
f. Save the model.

Adding the SOLIDWORKS Simulation to SOLIDWORKS and Starting a New Part File

Now, you need to add the SOLIDWORKS Simulation to SOLIDWORKS to perform the analysis.

1. Start SOLIDWORKS and then choose **Tools > Add-Ins** from the SOLIDWORKS menus; the **Add-Ins** window is displayed. Next, select both check boxes on the left and right side of SOLIDWORKS Simulation and then choose the **OK** button.

2. Start a new part document by using the **New SOLIDWORKS Document** dialog box. Note that the Simulation menu is added to the **SOLIDWORKS** menus and the **Simulation** tab is added to the CommandManager.

Starting SOLIDWORKS Simulation and Opening the Model

Start the SOLIDWORKS Simulation and open the model (*c02_tut03)*.

1. Start SOLIDWORKS and choose the **Open** button from the menu bar; the **Open** dialog box is displayed.

2. Browse to the folder in the **Open** dialog box where the model has been downloaded and then select the model.

3. Choose the **Open** button from the **Open** dialog box; the model is opened in SOLIDWORKS assembly mode.

Starting Linear Static Study

Now, you need to start a linear static study before creating custom material.

1. Choose the **Simulation** tab in the **CommandManager** tab.

Evaluation Copy. Do not reproduce. For information visit www.cadcim.com

2. Choose the **New Study** tool from the **New Study** flyout; the **Study PropertyManager** is displayed.

3. Choose the **Static** button from the **General Simulation** rollout and enter **Linear Study** in the **Study name** edit box of the **Name** rollout.

4. Choose the **OK** button from the **Study PropertyManager**; a linear static study is added.

Creating Custom Materials

In this section, you will create custom Gray Cast Iron and Mild Steel and then apply them to their respective parts.

1. Expand the **Parts** node by clicking on the symbol in the Simulation Manager tree; all components of the assembly are displayed under the **Parts** node.

2. Select **Bolt** and **Nut** in Simulation Tree by holding the CTRL key and right-click; a shortcut menu is displayed.

3. Choose the **Apply/Edit Material** option from the shortcut menu; the **Material** dialog box is displayed.

4. Right-click on the **Custom Materials** library at the bottom of the list of material libraries; a shortcut menu is displayed.

5. Select the **New Category** option from the shortcut menu; a folder with the name **New Category** is added to the **Custom Materials** library.

6. Right-click on the **New Category** folder and rename it as **Custom Steel**.

7. Right-click on the **Custom Steel** folder and choose the **New Material** option from the shortcut menu; a node is added under the **Custom Steel** folder with the name as **Default**.

8. Right-click on the **Default** node and rename it as **Gray Cast Iron**.

9. Choose the **Properties** tab in the **Material** dialog box if not chosen by default, and select the **SI (N/m2) (Pa)** option from the **Units** drop-down list.

10. Delete all the properties data present in the **Value** column of the **Material** dialog box.

11. Enter **1.9e+011** in the **Value** column of the **Elastic Modulus** row.

12. Enter **0.26** in the **Value** column of the **Poisson's Ratio** row.

13. Enter **7300** in the **Value** column of the **Mass Density** row.

14. Enter **4.48e+008** in the **Value** column of the **Tensile Strength** row.

15. Enter **2.41e+008** in the **Value** column of the **Yield Strength** row.

Evaluation Copy. Do not reproduce. For information visit www.cadcim.com

16. Choose the **Apply** button in the **Material** dialog box and close the dialog box; custom steel material is applied to the Nut and Bolt and also saved in the SOLIDWRKS libraries for further use.

17. Close the **Material** dialog box by choosing the **Close** button in it.

Next, you have to create Mild Steel custom material and apply it to Yoke Plate and Body.

18. Select **Yoke Plate** and **Body** in Simulation Manager tree by holding the CTRL key and right-click; a shortcut menu is displayed.

19. Choose the **Apply/Edit Material** option from the shortcut menu; the **Material** dialog box is displayed.

20. Expand the **Custom Materials** library node in the **Material** dialog box.

21. Right-click on the **Custom Steel** folder and choose the **New Material** option from the shortcut menu; a node is added under the **Custom Steel** folder with the name as **Default**.

22. Right-click on the **Default** node and rename it as **Mild Steel**.

23. Choose the **Properties** tab in the **Material** dialog box if it is not chosen by default.

24. Delete all the properties data present in the **Value** column of the **Material** dialog box.

25. Enter **1.9e+011** in the **Value** column of the **Elastic Modulus** row.

26. Enter **0.27** in the **Value** column of the **Poisson's Ratio** row.

27. Enter **7850** in the **Value** column of the **Mass Density** row.

28. Enter **3.99e+008** in the **Value** column of the **Tensile Strength** row.

29. Enter **2.3e+008** in the **Value** column of the **Yield Strength** row.

30. Choose the **Apply** button in the **Material** dialog box and close the dialog box; custom steel material is applied to the Yoke Plate and Body and also saved in the SOLIDWRKS libraries for further use.

31. Close the **Material** dialog box by choosing the **Close** button in the **Material** dialog box.

Applying Material from SOLIDWORKS Materials Library

In this section, you will apply Natural Rubber to Bush from the SOLIDWORKS Materials library.

1. Select both the **Bushes** in Simulation Tree by holding the CTRL key and right-click; a shortcut menu is displayed.

Evaluation Copy. Do not reproduce. For information visit www.cadcim.com

2. Choose the **Apply/Edit Material** option from the shortcut menu; the **Material** dialog box is displayed.

3. Expand the **SOLIDWORKS Materials library** node if not expanded already; a list of different material categories is displayed under this node.

4. Expand the node of the **Rubber** from the list of the list of the material category; different materials are displayed under this node.

5. Select the **Natural Rubber** from the list of these materials and choose the **Apply** button from the **Material** dialog box; the selected material is applied.

6. Close the **Material** dialog box by choosing the **Close** button in the **Material** dialog box.

7. Choose the **Save** button; the model is saved.

Self-Evaluation Test

Answer the following questions and then compare them to those given at the end of this chapter:

1. You can access standard materials in the _____ dialog box.

2. In SOLIDWORKS Simulation, you can not apply custom material to a model. (T/F)

3. The material properties available in the **SOLIDWORKS Materials library** can not be modified. (T/F)

4. Material applied to a model in modelling (SOLIDWORKS) environment can not be used for analysis. (T/F)

5. In SOLIDWORKS Simulation, you can not perform studies by assigning different materials on the same model. (T/F)

Review Questions

Answer the following questions:

1. Properties of a material for creating a custom material is assigned by using the _____ tab of the **Material** dialog box.

2. Material appearance for custom material is assigned by using the _____ tab in the **Material** dialog box.

3. When you are applying material to a part then you will get the _____ option in the shortcut menu in place of the **Apply Material to All** option.

Evaluation Copy. Do not reproduce. For information visit www.cadcim.com

4. In SOLIDWORKS Simulation, individual material can not be applied to the components of an assembly. (T/F)

5. Material applied in SOLIDWORKS Simulation will not affect the material applied to a CAD model in SOLIDWORKS. (T/F)

EXERCISES

To perform the exercises of this chapter, you need to download the input files from *www.cadcim.com*. The complete path for downloading the file is:

Textbooks > CAE Simulation > SOLIDWORKS Simulation > SOLIDWORKS Simulation 2018: A Tutorial Approach > Input Files > c02_simulation_2018_input.zip

Extract the downloaded zipped file at the location *C:\SOLIDWORKS Simulation\c02*.

Exercise 1

In this exercise, you will open the downloaded *c02_exr01* file in SOLIDWORKS. Start a linear Static study and assign AISI 1045 Steel, cold drawn material from the **SOLIDWORKS Material library** to the model. Figure 2-12 shows the model for the exercise.

(Expected time: 30 min)

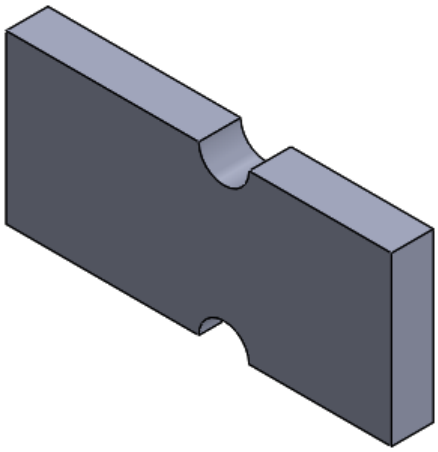

Figure 2-12 *Model for Exercise 1*

Exercise 2

In this exercise, you will open the downloaded *c02_exr02* file in SOLIDWORKS and apply different materials to different components of the assembly. Figure 2-13 shows the Bench vice assembly. The Vice Body, Base Plate, Jaw Screw, Screw Bar and Bar Gloves are made up of Grey Cast Iron whereas the Vice Jaw and the Vice Jaw Base are made up of Mild Steel. The properties of Mild Steel and Gray Cast Iron are given next. Figure 2-14 shows various components of the Bench vice assembly. **(Expected time: 30 min)**

Evaluation Copy. Do not reproduce. For information visit www.cadcim.com

Properties of Mild Steel

Mass density:	7850 kg/m³
Elastic modulus:	1.9e+011 N/m²
Poisson's ratio:	0.27
Yield strength:	2.3e+008 N/m²
Tensile strength:	3.99e+008 N/m²

Properties of Gray Cast Iron

Mass density:	7300 kg/m³
Elastic modulus:	1.9e+011 N/m²
Poisson's ratio:	0.26
Yield strength:	2.41e+008 N/m²
Tensile strength:	4.48e+008 N/m²

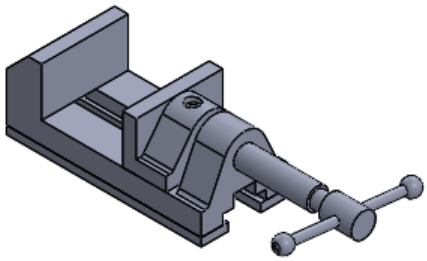

Figure 2-13 *Bench vice assembly*

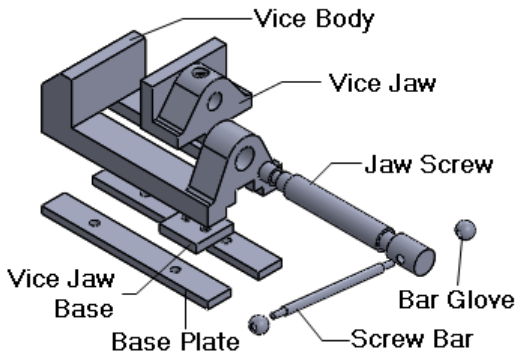

Figure 2-14 *Various components of the Bench vice assembly*

Evaluation Copy. Do not reproduce. For information visit www.cadcim.com

Answers to Self-Evaluation Test

1. Material, **2.** F, **3.** T, **4.** F, **5.** F